TURBO VAC 60R-HD

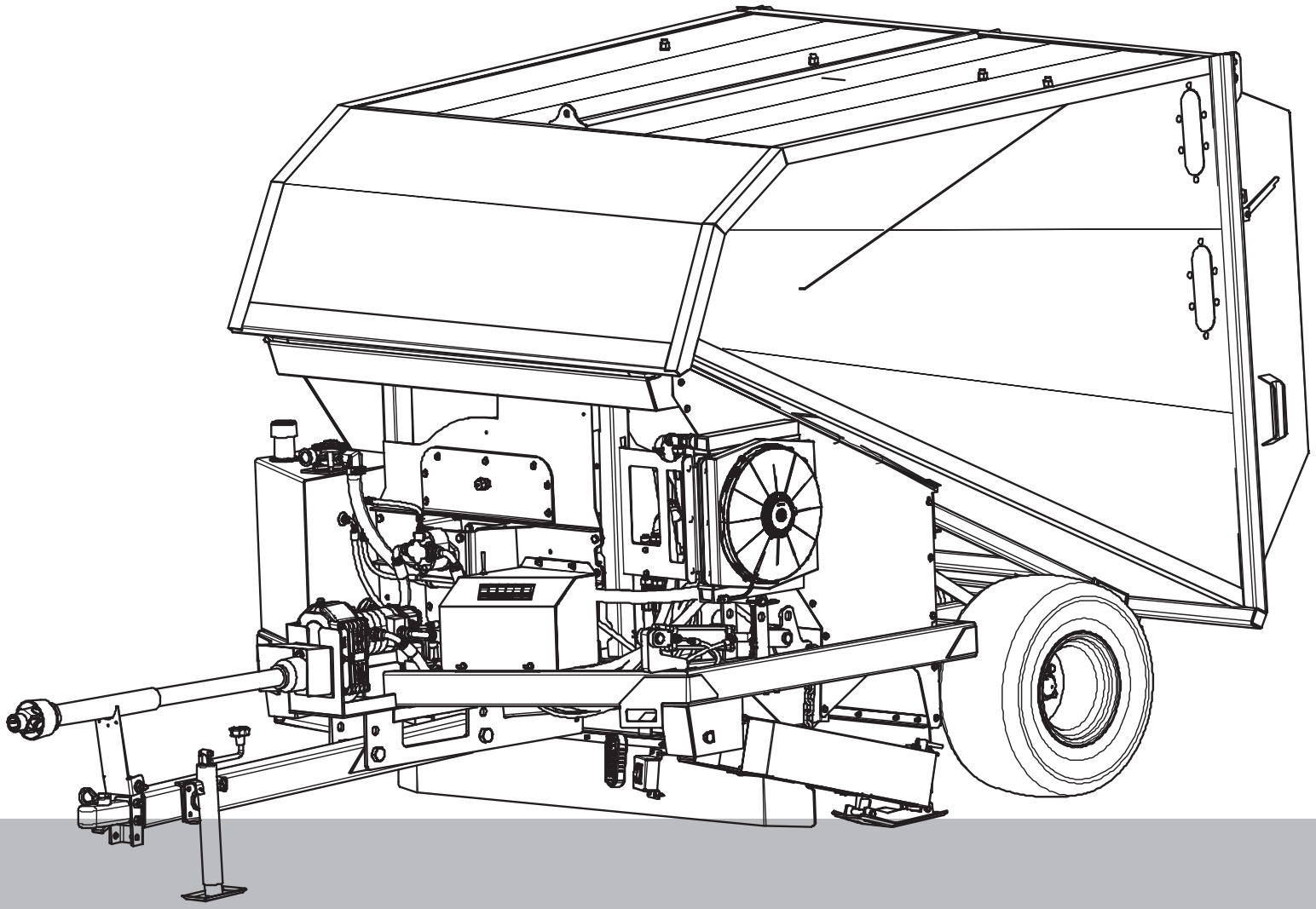

OPERATOR'S & PARTS MANUAL

1-2023

HARPER INDUSTRIES INC

Thank you for purchasing a Harper Turbo Vac.

TO THE OWNER OR OPERATOR:

As with all Harper products, the Harper Turbo Vac has been developed through tough design and testing procedures to produce a machine that can be relied on. This manual gives assembly, operating, and service information for models **TV60R-HD**. Please read and understand all instructional material included with the Turbo Vac and its components before assembling and operating the equipment.

A Turbo Vac can present hazards to an operator who follows unsafe procedures in either the operation or maintenance of the unit. Therefore, **SAFETY WARNINGS** are presented at certain locations in the text.

SYMBOL: ⚠ **SAFETY WARNING!** ⚠

MEANING: Failure to understand and obey this warning may result in injury to you or others. Whenever this symbol is used, please pay very close attention to the information presented, and make sure you fully understand. If you do not, contact your dealer or Harper Industries for clarification.

⚠ **SAFETY WARNING!** ⚠

All shields and guards must be in place for proper and safe operation of this equipment. Where they are shown removed in this manual, it is for purposes of illustration and instruction only. Do not operate this equipment unless all shields and guards are in place.

Harper Industries, Inc. is continually striving to improve the design and performance of its products. We reserve the right to make changes in specifications and design without thereby incurring any obligation relative to previously manufactured products.

© 2023 Harper Industries, Inc.
The Harper and Goossen names are registered trademarks of Harper Industries, Inc. All other brand and productnames are trademarks or registered trademarks of their respective companies.

LIMITED WARRANTY

Harper Industries, Inc. (HII) warrants to each purchaser of a new Harper Turbo Vac from an authorized dealer or representative, that such equipment is free of manufacturer's defects in workmanship and materials which appear while in normal service for a period of ONE YEAR commencing with delivery to the original user.

The obligation of HII under this warranty is expressly limited, at our option, to replacement or repair at a service facility designated by Harper Industries or at the manufacturing plant in Harper, KS. A part will be replaced after inspection discloses it to have been defective. This warranty does not apply to defects caused by damage or unreasonable use (including failure to provide reasonable and necessary maintenance, or by performing functions without genuine Harper Turbo Vac accessories) while in the possession of the consumer.

Warranty is limited to parts, labor and ground freight delivery of replacement parts. HII shall not be liable for the consequential damages of any kind, including but not limited to consequential labor costs or transportation charges in connection with replacement or repair of defective parts.

This warranty does not apply to parts subjected to misuse, abuse, alteration, improper or inadequate maintenance, or normal wear (including belts, battery, chains, filters, knives, brush and broom).

Engines are not covered under this warranty. Refer to manufacturer's warranty for specific warranty information. Harper Industries, its agents or representatives, make or imply no other warranties.

Harper Industries makes no warranty with respect to trade accessories. They are subject to the warranties of their respective manufacturers.

ANY IMPLIED OR STATUTORY WARRANTIES, INCLUDING ANY WARRANTY OR MERCHANTABILITY OR FITNESS FOR A PARTICULAR PURPOSE, ARE EXPRESSLY LIMITED TO THE DURATION OF THIS WRITTEN WARRANTY. HII makes no other express warranty, nor is anyone authorized to make any on behalf of HII.

For further information please contact your nearest Harper Turbo Vac dealer.

RECORDS

Date of Purchase _____ / _____ / _____

Dealer's Name _____

Dealer's Phone _____

Serial Number Machine _____

Serial Number Engine _____

Table of Contents

OPERATOR SECTION

To the Owner or Operator....1
Warranty Statement....2
Table of Contents....3
Specifications....4
Feature Identification....5
General Safety Guidelines
- Equipment & Controls....7
- Guards & Shields....7
- Before Operation....7
- During Operation....7
- During Service & Maintenance....8
- Safety Decals....8
- Replacement Parts....9
- Hydraulics....9

Specific Safety Guidelines
Set-up and Operation
- TV60R-HD....11
- Starting Operation....12
- Stopping Operation....12
- Unloading Hopper....12
- Towing....13

Adjustments
- Level Hook-Up....14
- Deck Height....14
- Remote and Receiver....16

Service & Maintenance
- Break-in Service....18
- Lubrication....18
- Hydraulic Oil Reservoir....19
- Hydraulic Oil Cooler....20
- Remote Control....20
- Blower Liner....20
- Return Air Screens....21

TV60R-HD Service Schedule....22
Troubleshooting....23
Optional Equipment....24

PARTS SECTION

Structure
- Frame Assy....1.1
- Wheel Assy....1.2
- Deck Arms Assy....1.3
- Attaching Deck Arms....1.4
- Fan Housing....1.5
- Air Return....1.6
- Fan Housing Assy - Liner & Flap....1.7
- Fan Housing Installation....1.8
- Hopper and Door....1.9
- Air Return Screens....1.10
- Guards & Shields....1.11
- Decals....1.12

Hydraulics
- Hydraulic Schematic....2.1
- Hydraulic Reservoir....2.2
- Hydraulic Pump Assy....2.3
- Oil Cooler Assy....2.4
- Fan Drive Hydraulics....2.5
- Deck Drive Hydraulics....2.6
- Fan and Deck Valves....2.7
- Implement Valve....2.8
- Implement Drive Hydraulics....2.9

Electrical
- Remote and Receiver....3.1
- Wiring Schematic....3.2

Attachments
- Verticut Rotor....4.1
- Verticut Rotor w/ Carbide Tip Baldes....4.2
- Ringer Rotor....4.3
- Broom Rotor....4.4

Specifications

Safety Features	Locking safety latches on all cylinders for service functions
Power	Tractor PTO - 540 RPM - *40 HP Tractor required*
Hydraulic System	PTO driven triple-section pump powers fan, deck rotor, and cylinders
Hydraulic Reservoir	20 gallons - Crown AW46
Blower Drive	Hydraulic motor powered by gear pump
Blower Fan & Housing Liner	• 25” diameter fan of abrasion-resistant steel • 1½” shaft with self-aligned bearings supporting both ends • Easy access to housing liner* for inspection and replacement *UHMW poly-liner - Ultra High Molecular Weight Polyethylene
Deck Drive	Hydraulic motor - chain drive
Broom Option	12” diameter X 60” wide pick-up broom with heavy-duty polyethylene bristles
Rubber Finger Option	12” diameter X 60” wide rubber finger pick-up rake
Verticutter Option	12” diameter blades X 56” cutting width * 28 - 10 Gauge blades on 2” spacing * adjustable skids for height adjustment
Bearings	Greasable bearings and sealed bearings
Hopper	7 yard capacity
Wheels/Tires	6-bolt steel wheels • Turf tires – 26 x 12 (standard) • Radial tires – 225 X 60R15 steel belted (available as an option)
Controls	Wireless RF (radio frequency) remote controls
Discharge	Hydraulic dump with hydraulic powered latches
Hitch	Adjustable height tongue with ball hitch
Paint	Durable 2-part polyurethane
Dimensions	164” long X 85” wide X 85” high
Weight	2250 lbs – 1023 kg

NOTE: *Following publication of this manual certain changes in standard equipment and/or options may have occurred that would not be included in these pages. Your Harper/Goosen dealer is the best source for up-to-date informaion.*

Feature Identification

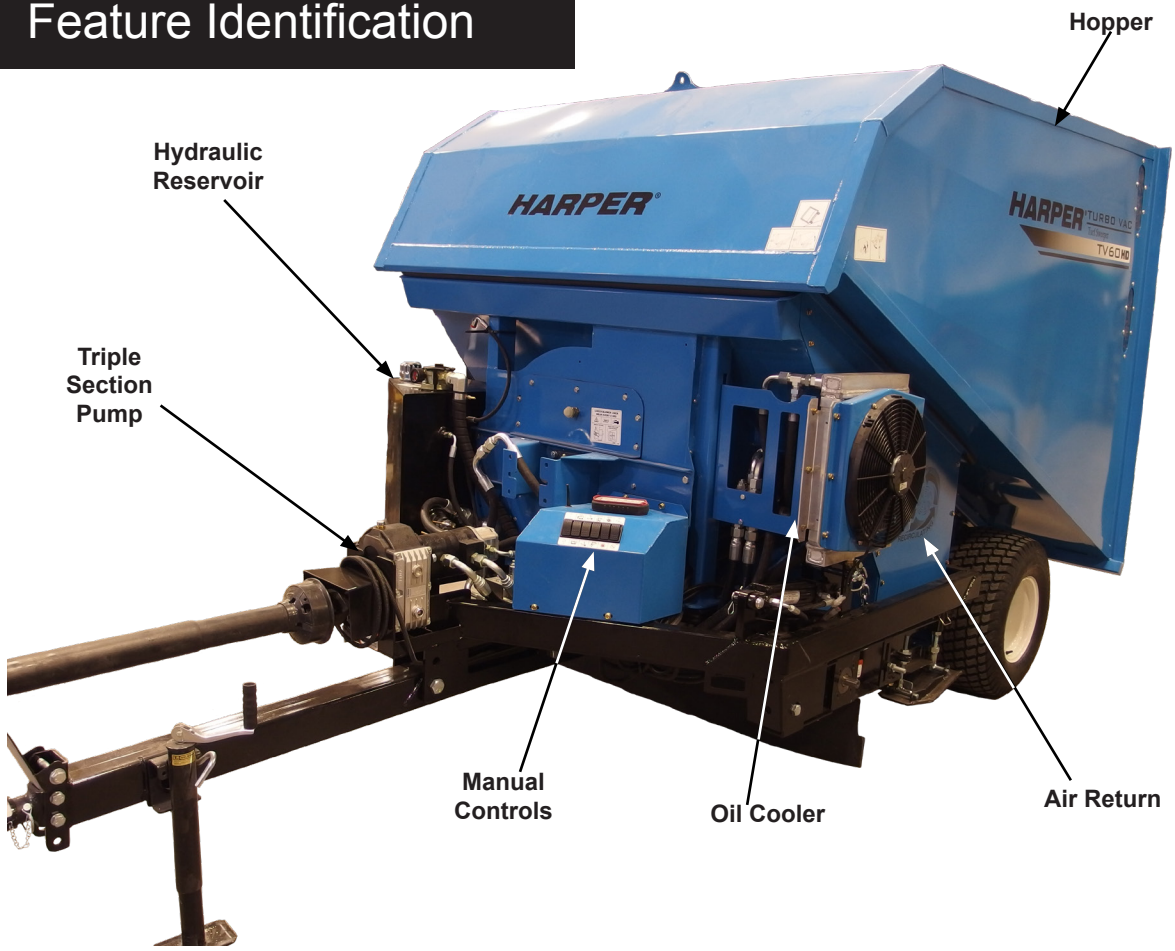

Triple Section Pump – The triple section pump powers the deck, fan, and implement parts of the machine.

Deck Motor – The broom motor turns the broom clock-wise, throwing material forward and upward into the air stream.

Oil Cooler – The oil cooler prevents the hydraulic oil from over-heating. Always keep the fins free of debris.

Hydraulic Reservoir – The hydraulic reservoir on a **TV60R-HD** has a 20 gallon capacity.

Air Return – The air return allows air to be recirculated, significantly reducing dust.

Hopper – The hopper stores up to seven yards of collected material.

Manual Controls – All of the functions on the Turbo Vac can be operated with the manual controls or the remote controls.

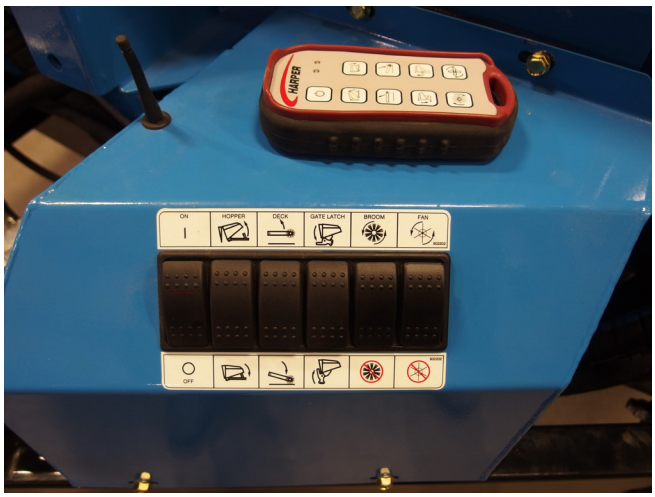

TV60R-HD - Hydraulic System

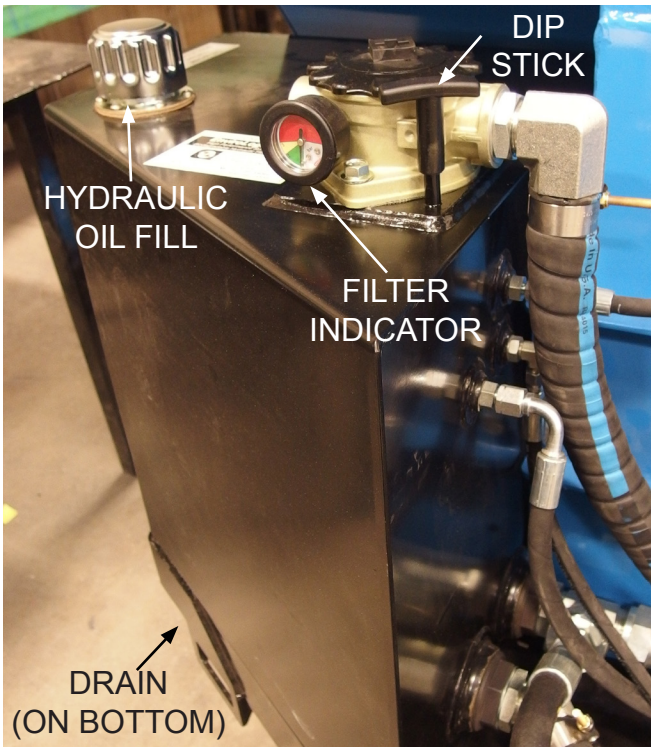

Hydraulic Reservoir Assembly

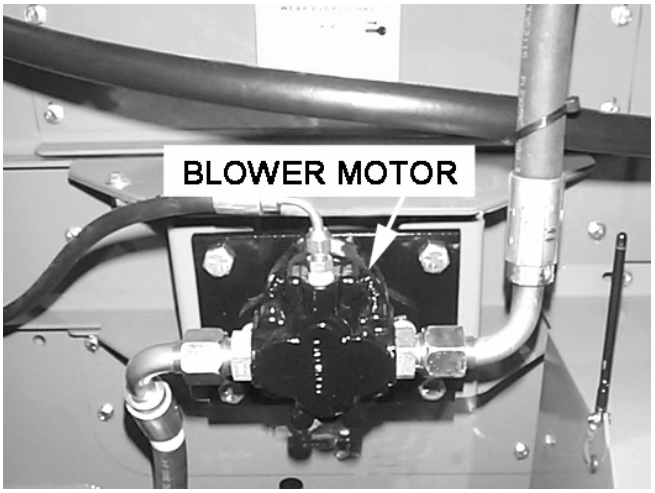

Blower Motor

Deck Pump **Fan Pump** **Implement Pump**

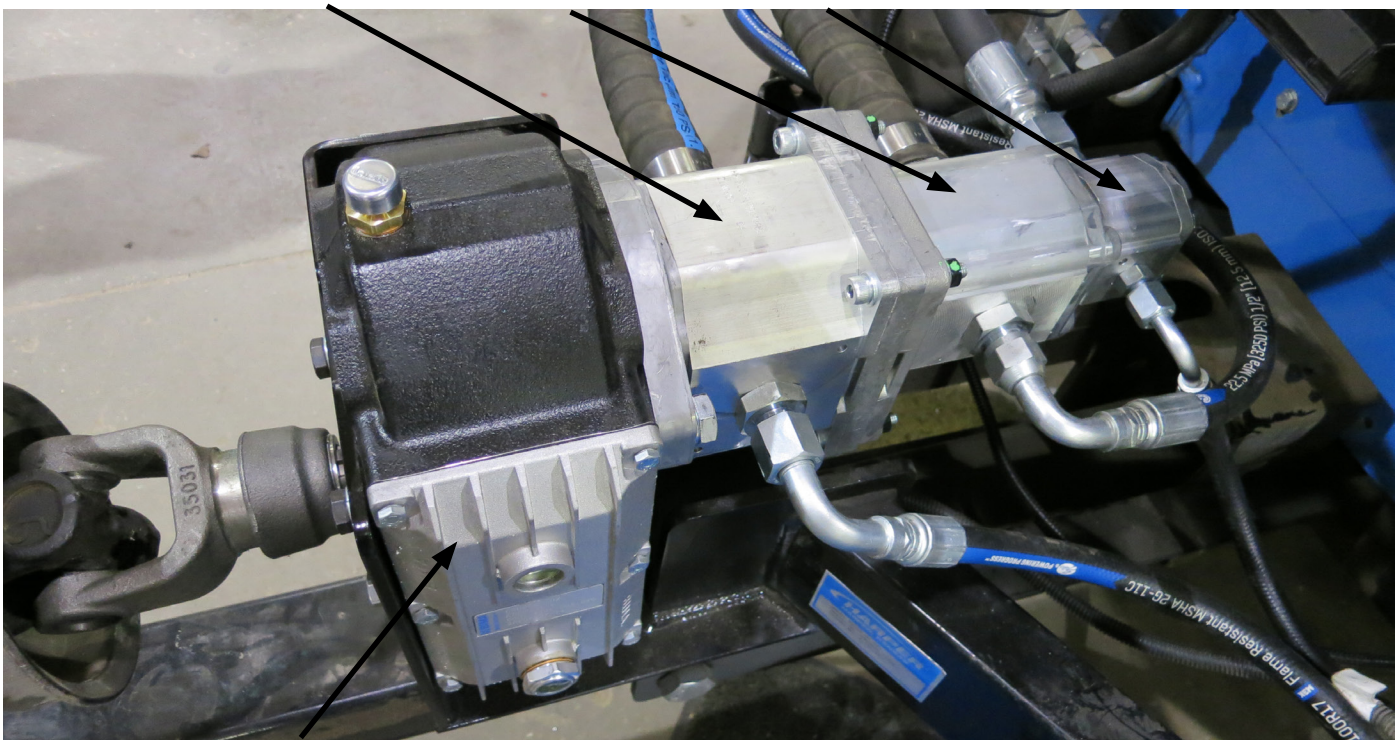

1:4 Ratio Gearbox

Triple Gear Pump

General Safety Guidelines

Equipment & Controls

- Before operating this equipment, read and understand the Owner's Manual.
- Altering the unit in any way that adversely affects its safe operation, performance or durability will void the warranty and may cause hazardous conditions.
- Know the location and function of all controls and how to stop the equipment quickly in an emergency before you operate the Turbo Vac.
- Keep all nuts, bolts and screws tight to ensure safe operation of equipment.

Guards & Shields

- Keep all safety devices in place and in good operating condition.
- Replace all worn, damaged, unusable, missing or lost safety shields and guard before operating unit.

Before Operation

- Do not allow children near this machine.
- Make sure bolts in tongue are secure and jack is in the transport position.
- Tire pressure should be 30-32 psi and equal in both tires.
- Engine governor settings are preset and should not be changed; any change can damage moving parts and void warranty.
- Before starting the machine, visually inspect all nuts, bolts and other fasteners to see that they are properly secured.
- Nuts, bolts and other fasteners should be checked after the first hour of operation and every 8 to 10 hours there after for proper alignment and tightness.
- Make sure that all belts are in good condition, and replace if necessary.

During Operation

- While operating the equipment, make sure that no foreign objects such as rocks, bottles or other hard materials are in the path of the Turbo Vac.
- If an object should strike the broom or blower mechanism causing an unusual noise or vibration, shut the engine off immediately and allow it to come to a complete stop. Disconnect the spark plug wire from the spark plug of the power unit, and do the following:

  1. Inspect for damage.

  2. Repair or replace damaged parts.

  3. Check for and tighten any loose bolts, nuts, fasteners or parts.

- Keep the engine area clean and free of debris and other accumulations.
- If the Turbo Vac should become clogged, shut off the engine and allow it to come to a complete stop. Disconnect the spark plug wire from the spark plug of the power unit before attempting to remove the clog.

⚠ SAFETY WARNING! ⚠

Always keep a fire extinguisher near the Turbo Vac during operation and service.

⚠ SAFETY WARNING! ⚠

To prevent possible eye injury, always wear SAFETY GLASSES while operating or servicing the equipment.

During Service & Maintenance

SAFETY WARNING!

When working under the hopper the cylinder safety lock should be engaged to prevent the hopper from falling.

- To engage the cylinder safety lock, take the pin out of the bracket on the hopper and pull the handle down.

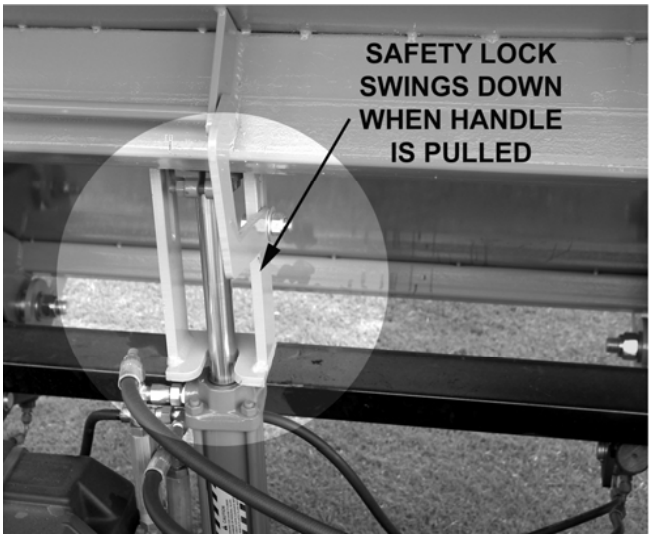

- The cylinder safety lock prevents the hopper from being lowered so that maintenance can be performed safely.
- When finished working under the hopper, disengage the safety lock, put the handle back into the bracket on the hopper and replace the pin.

SAFETY WARNING!

Attempting to lower the hopper while the cylinder safety lock is engaged may cause damage to the cylinder and/or the safety lock mechanism.

SAFETY WARNING!

If it is necessary to get between the hopper and the hopper door, set the door prop to avoid being pinched.

- To set the door prop, pull the door open and insert prop into pre-cut hole in door.

Safety Decals

- If safety related or instructional decals become illegible or are removed, replace them immediately.
- If parts are replaced, make sure all safety related or instructional decals are present before the equipment is operated again.
- New decals may be obtained from your local Harper Dealer.

Replacement Parts

SAFETY WARNING!

Use genuine factory parts or parts with equivalent characteristics including: type, strength and material. Failure to do so may result in voidance of warranty, product malfunction or possible injury to operator and others.

- Replace locknuts and locking screws if they can be tightened without considerable resistance for several turns before they are completely tight.
- If hardware is not secure, or if some of the fasteners are over-tightened, equipment failure may result, posing possible safety hazards.
- Use proper torque specifications for all fasteners when they are replaced.

Hydraulics

SAFETY WARNING!

HIGH-PRESSURE FLUID HAZARD!

Escaping fluid under pressure can penetrate skin and cause serious injury or death.

To prevent serious injury or death:

- Relieve pressure on system before repairing, adjusting or disconnecting.
- Wear proper hand and eye protection when searching for leaks.
- Use wood or cardboard instead of hands when looking for leaks.
- Keep all hoses, fittings and components in good repair.
- Do not use any type of heat or flame (welding, soldering, cutting torch, etc.) near pressurized hydraulic lines.

Specific Safety Guidelines

TV60R-HD

- Avoid wearing loose clothing to prevent it from getting caught in the PTO drive.
- Keep clothing and all body parts away from rotating parts.
- The pump stop bar must be properly positioned to keep the hydraulic pump from spinning with the PTO.
- The Turbo Vac hydraulic system operates under high pressure. Be sure the hydraulic system is disabled prior to service.

SAFETY WARNING!

Engage the tractor PTO at low engine RPM when operating the TV60 RHD to prevent premature failure of hydraulic system components.

SAFETY WARNING!

HIGH-PRESSURE FLUID HAZARD! Escaping fluid under pressure can penetrate skin and cause serious injury or death.

Set-Up and Operation

SAFETY WARNING!

Periodically clean material away from engine to lessen the possibility of fire.

TV60R-HD

1. Before using the **TV60R-HD** for the first time, install the battery cable onto the tractor battery to supply power to the unit's valve and RF receiver. Connect the black wire of the cable to the negative terminal and the red wire (with 30 amp fuse) to the positive terminal of the battery. When using more than one tractor, other power cords may be ordered (p/n 935017).
2. Attach the unit to a tractor with a PTO. Be sure that the Turbo Vac is level with the ground. (Refer to Adjustments section.)
3. Attach the PTO shaft to the tractor's PTO.
4. Make certain that the case drain hose is on top of the pump and in a vertical position when attached to the tractor.
5. Plug quick connector on battery cable to the quick connector located on the tongue of the **TV60R-HD**.
6. Engage tractor PTO and set to 540 RPM.

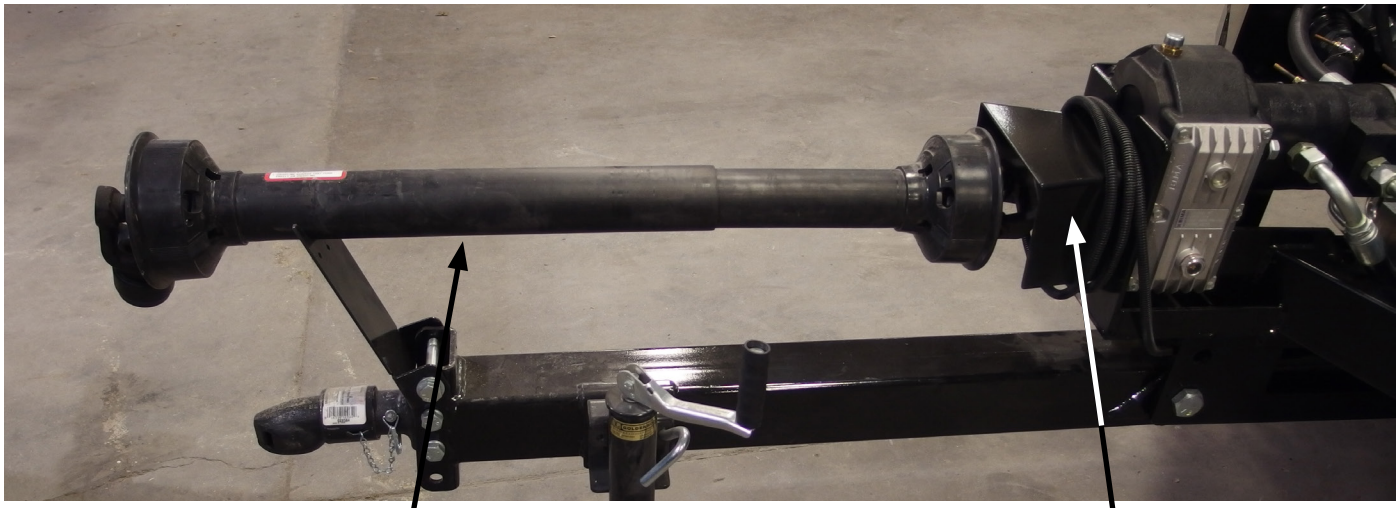

540 RPM PTO Shaft

1:4 Ratio Gearbox

Starting Operation

SAFETY WARNING!

Before operating the Turbo Vac, perform the daily inspection as described in the Service & Maintenance section.

Before operating the Turbo Vac, the operator should be familiar with the area to be swept, and make sure it is clear of large debris.

1. Push the switches on the remote control or move the manual switches to activate the functions on the Turbo Vac. The tractor PTO must be egaged for the blower to function on the **TV60 RHD**.
2. Engage the tow vehicle and advance slowly at first to test environmental conditions and machine performance.
3. Proceed with caution, steering clear of obstacles that could damage broom.

SAFETY WARNING!

Wear approved eye and ear protection while operating the Turbo Vac.

Keep all guards in place during operation. Never operate the Turbo Vac with safety shields removed.

Always keep a fire extinguisher near the Turbo Vac during operation.

Stopping Operation

TV60R-HD

1. Push the BROOM switch only on the remote control to turn off the broom.

Note: The BLOWER switch is not used on the **TV60R-HD** remote control.

2. Move the throttle on the tractor to the “SLOW” position and disengage the PTO lever to turn off the blower.
3. Shut off the tractor engine and allow the unit to come to a complete stop.

SAFETY WARNING!

Do not leave the Turbo Vac unattended, or attempt any service or inspection unless the machine has come to a complete stop, the engine has been shut off, and the spark plug has been disconnected.

Unloading Hopper

1. Check the overhead clearance. 8’ 6” is required for dumping.
2. To unload, press the OPEN LATCH and LIFT HOPPER buttons on the remote.
3. When unload is complete, press the LOWER HOPPER button. Once the hopper has lowered completely, press the CLOSE LATCH button.

SAFETY WARNING!

Do not stand near the back of the Turbo Vac while unloading.

If there is grass stuck in the hopper, do not go in between the hopper and the door without setting the safety lock.

Check overhead clearance during use.
Clearance is: 7’ 6” for sweeping
8’ 6” for dumping

Towing

SAFETY WARNING!

The Turbo Vac does not meet highway safety codes. Tail lights, turn signals and safety chains must be attached before towing on public roadways.

- Two types of ball hitches have been used on the Turbo Vacs: clamp and jaw.
- For the clamp-type displayed in the following photograph, close the clamp around the ball and secure with the lock collar. Insert the pin to keep the lock collar in place.

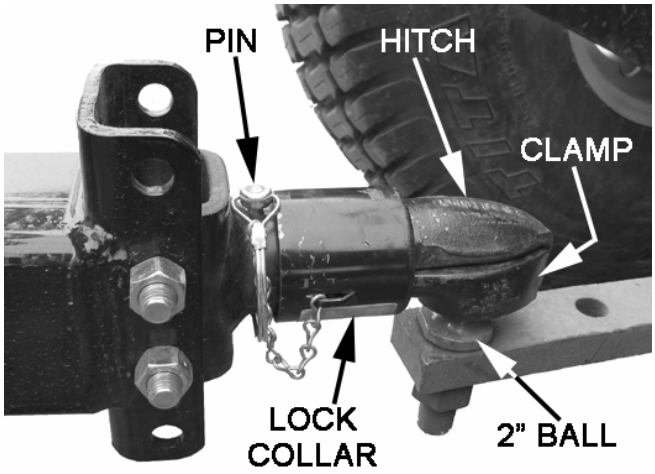

- For the jaw-type displayed in the following photograph, turn the handle until the jaw closes completely around the ball.

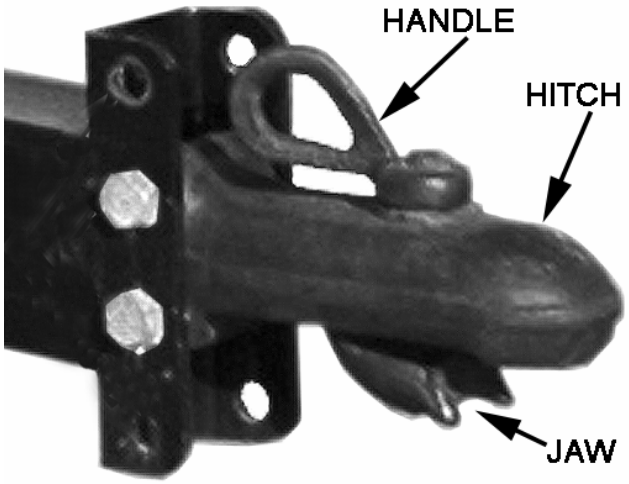

- The jack stand should be up whenever the Turbo Vac is connected to a tow vehicle.

- Always use the safety pin to lock the broom lift when towing the unit.

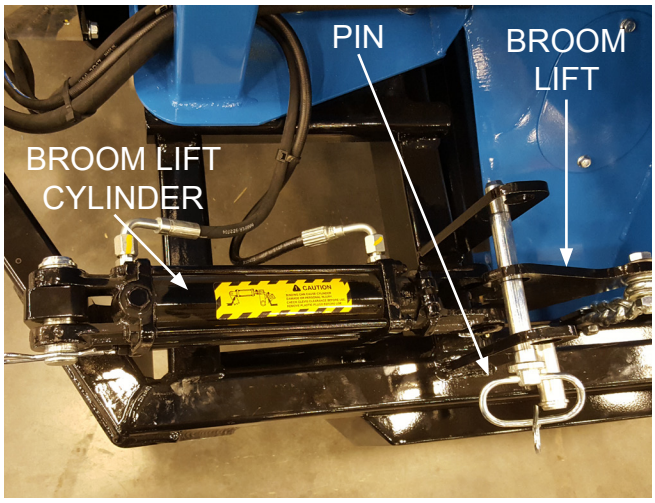

- Tire pressure should be 30-32 psi and equal in both tires.
- Make sure the wheel lug nuts are tight.

Adjustments

Level Hook-Up

- For the Turbo Vac to work properly, the frame needs to be level with the ground.
- The tongue can be moved up or down depending on which set of holes on the frame are used.

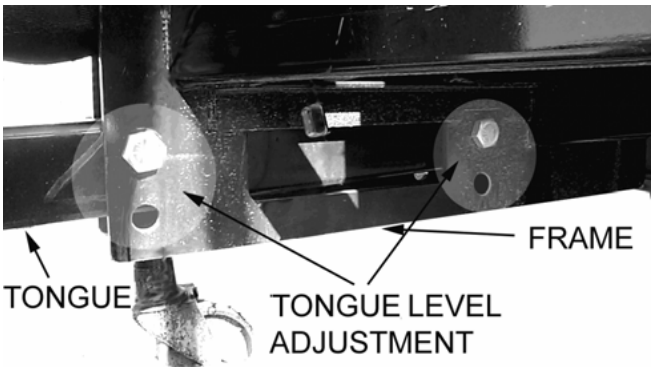

- The hitches on different tow vehicles vary in height, so there are adjust - ments on the hitch and the tongue to keep the Turbo Vac level.

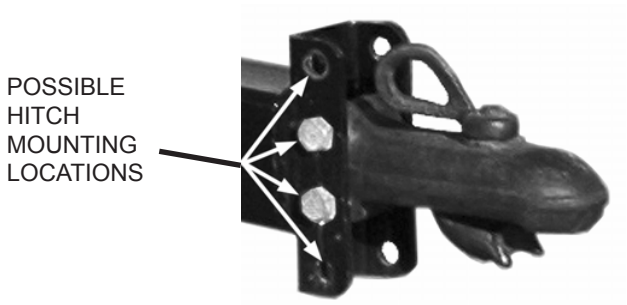

Deck Height

- The deck height should be adjusted so that the deck barely touches the grass.

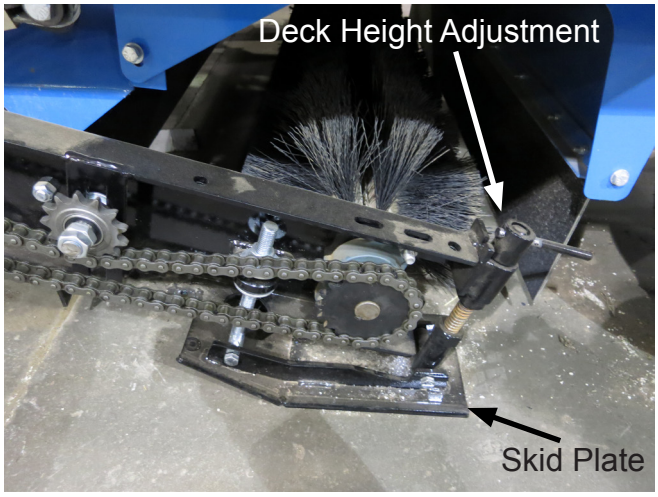

- Deck height is easily adjusted tightening or loosening the deck height adjustment tool that is attached.
- Make sure that both skid plates (one per side of unit) are adjusted the same so the deck stays level.

Remote and Receiver

Operation

- Turn on the transmitter, press and hold the POWER button for at least 2 seconds and release.
- To turn the transmitter off, press and hold the POWER button until the LEDs stop toggling.
- The transmitter is designed with a power saving feature which turns the transmitter off after 15 minutes irrespective of receiver status.
- There are red and green LEDs both on the keypad of the transmitter and inside the receiver case. The green LED will double blink when no buttons are pressed, blink rapidly when talking to the receiver & a button is pressed, and it will slowly blink if there is no communication (i.e. - no power to the reciever) when a button is pressed.
- The red LED on the receiver will blink if there is a shorted or open output.
- The transmitter's red LED blinks 1 time per second if the battery is low and needs charging.
- If transmitter is powered off or goes out of range outputs will turn off and be disabled until power on and in range.

Synchronizing Transmitter and Receiver

Each transmitter and receiver pair is synchronized together at the factory. If a new transmitter is needed, synchronizing is required. Use the following procedure:

1. Make sure transmitter and receiver are off.
2. Press and hold transmitter LOWER HOP and BROOM ON/OFF button, then press POWER button until both LEDs start blinking.
3. Release buttons.
4. Apply power to receiver.
5. Wait for 5 seconds or until the green LED on the transmitter starts blinking.
6. Teach complete.

Sleep Time

All transmitters have the ability to change the sleep time from the default to user's preference. The transmitter is factory set to turn off (sleep) after 15 minutes irrespective of receiver status. To change the time the transmitter waits before going to sleep, use the following procedure:

1. With the transmitter off, press and hold buttons RAISE BROOM, LOWER BROOM, BROOM ON/OFF, & POWER (~ 5 seconds)
2. At this point, both lights will blink once per second. Release the buttons.
3. On the transmitter, press one of the following buttons to adjust the sleep time:

- LOWER HOP = 15 minutes
- LIFT HOP = 30 minutes
- LOWER BROOM = 60 minutes
- RAISE BROOM = 120 minutes
- BROOM ON/OFF = DISABLED

4. Sleep time programing complete.

Cloning Transmitters

⚠ SAFETY WARNING ⚠

ONLY ONE TRANSMITTER CAN BE ON AT A TIME, THEY CANNOT BE USED SIMULTANEOUSLY - use with CAUTION!

Occasionally, it is desired to have more than one transmitter work with a single reciever. This is accomplished by a process called cloning. Cloning allows an additional transmitter (B) to have the same ID code as the original transmitter (A). If this feature is desired, use the following procedure:

1. Make sure both transmitters and the receiver are off.
2. On Transmitter A, press and hold the POWER button for 10 seconds until LEDs blink, then release. Green and red LEDs will blink together at this point.
3. On Transmitter B, press and hold buttons LIFT HOP, LOWER HOP, and POWER simultaneously until both LEDs start to blink.

4. Wait for a few seconds until the green LED starts to blink on both transmitter A and transmitter B.
5. Turn both the transmitters off.
6. Synchronize one of the transmitters to the receiver using SYNCHRONIZING TRANSMITTER AND RECEIVER instructions.

If the cloning feature has been invoked and is no longer desired, the ID code of one of the transmitters needs to be changed. This will unclone the transmitters. If this is desired, use the following procedure:

- Make sure the transmitter is off.
- Press and hold LIFT HOP, LOWER BROOM, BROOM ON/OFF and POWER buttons for 5 seconds.
- Release all the buttons when GREEN and RED LEDs start toggling.
- Press any button and release. GREEN LED should start to double-blink.
- ID change Sequence complete.

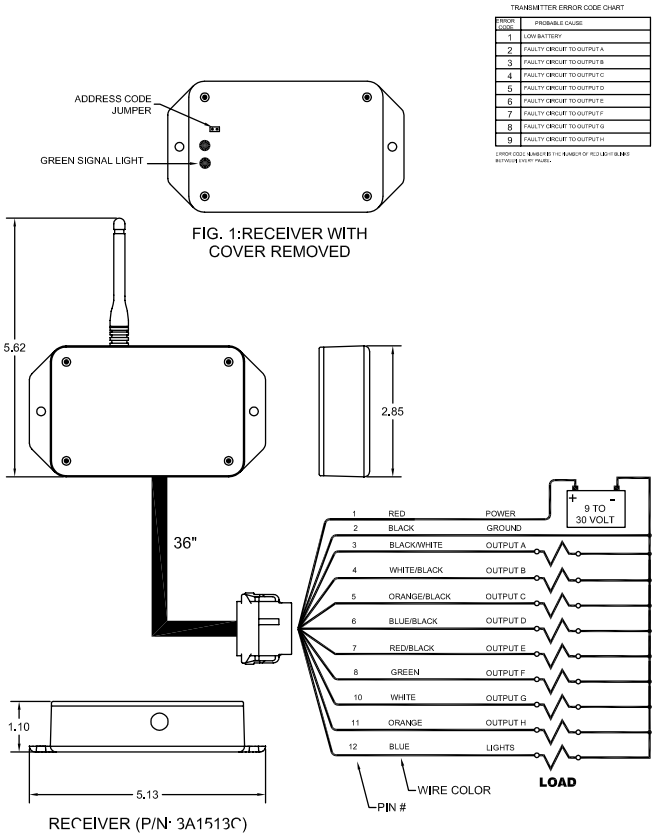

FIG. 1:RECEIVER WITH COVER REMOVED

RECEIVER (P/N: 3A1513C)

PROGRAMING OUTPUT FOR TV60

The user can determine the output functionality and program the system as desired. This is determined by the following procedure:

1. Make sure transmitter and receiver are synchronized.
2. Turn off the receiver and turn on the transmitter.
3. Press and hold buttons LOWER HOP, RAISE BROOM, and BROOM ON/OFF simultaneously. Red LED should be blinking at this point. Release buttons.
4. Turn on the receiver. Make sure receiver green LED is blinking indicating communication with transmitter.
5. Hold and release the OPEN switch to select desired logic for outputs below.
6. Hold and release POWER button for one second to save the selection and exit configuration mode.

OPEN

BUTTON PRESS	ENGAGE OUTPUTS
LOWER HOP	A
LIFT HAP	B
LOWER BROOM	C
RAISE BROOM	D
CLOSE	E
OPEN	F
BLOWER ON/OFF	G (LATCHING)
BROOM ON/OFF	H (LATCHING)

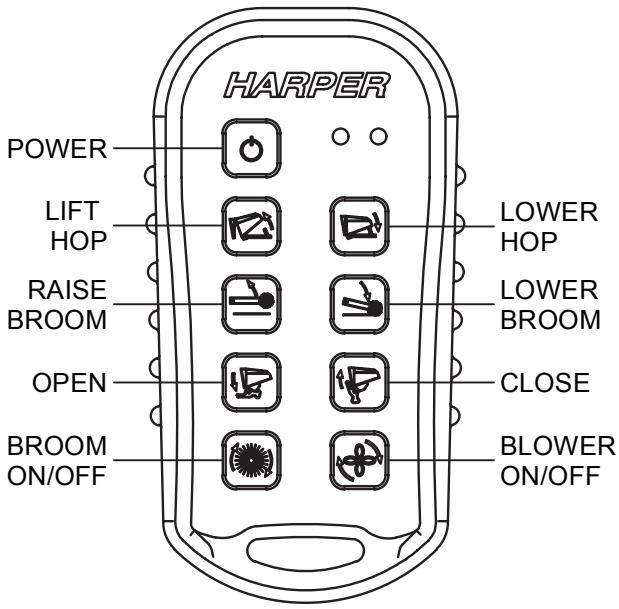

Service & Maintenance

SAFETY WARNING!

Before servicing or inspecting the Turbo Vac, make sure the power source is shut off and all moving parts have stopped.

SAFETY WARNING!

Disconnect the spark plug wire or the negative battery cable to prevent the engine from being turned on.

SAFETY WARNING!

Always wear safety glasses and protective gloves when servicing the Turbo Vac.

Break-in Service

After the first hour of use:

- Check belts. Tighten if needed.
- Tighten set screws on bearings.
- Check nuts, bolts, and fasteners to see that they are secure. Tighten if needed.
- Check hydraulic hoses and fittings for leaks using the method described in the General Safety Guidelines. Tighten or replace if needed.

Lubrication

Ten grease zerks in the following locations should be greased daily to reduce wear:

- Hopper door latches (2)

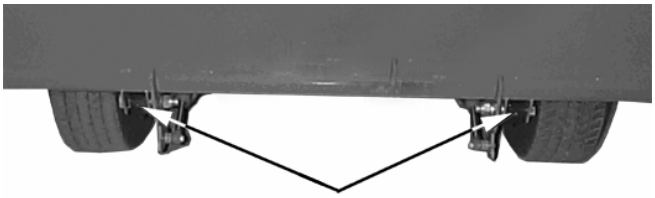

HOPPER DOOR LATCH ZERKS

- Broom lift (2)

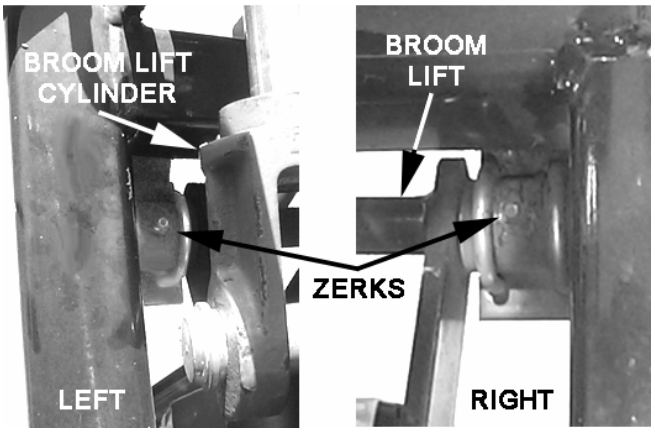

- Blower shaft (2)

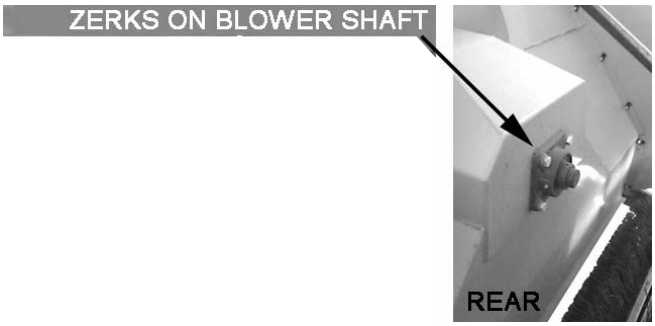

- Rotor shaft (2) - one on each side
- Deck Hinge Shaft (2) - one on each side

Deck Hinge Shaft — Rotor Shaft

* Located behind frame and must be turned until its visible.

- Replace the safety shields before operating the Turbo Vac.

TV60R-HD Hydraulic Oil Reservoir

- The **TV60R-HD** is equipped with a HY-DAC hydraulic oil filter assembly that is designed for a long service life.
- Monitor the needle in the filter indicator daily. The element (Part no. 822002) does not need replaced until the needle is in the red portion of the gauge.

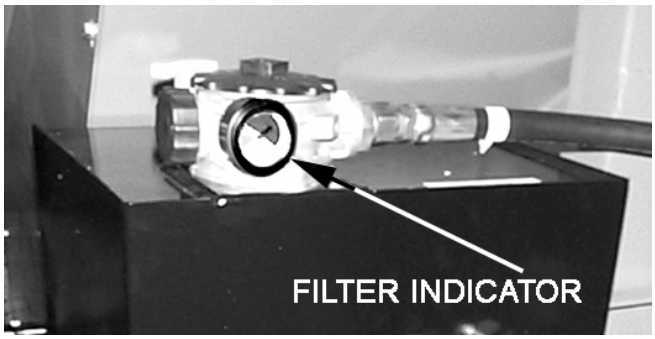

- To replace the element, unscrew the cover, remove the old element and insert the new one.

To add hydraulic oil to a **TV60R-HD** reservoir:

- For small quantities, simply remove cover and add oil. The oil will seep past the filter element slowly.
- For larger quantities, remove the cover and the filter element. Take extra care that no impurities enter the reservoir.
- Maintain the oil level in the reservoir between the FILL and ADD marks on the dipstick at all times.

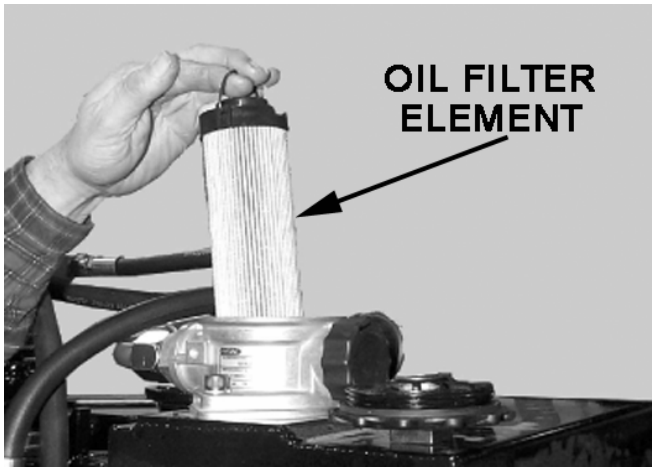

Note: The Turbo Vac is filled at the factory with biodegradable hydraulic oil. Mixing with regular oil will reduce biodegradability.

⚠ SAFETY WARNING! ⚠

Escaping hydraulic fluid under pressure can penetrate skin and cause serious injury or death.

Hydraulic System

- The hydraulic system of the **TV60R-HD** is filled at the factory with Crown AW46 hydraulic oil that has an ISO of 46.
- The **TV60R-HD** has a 10 micron, beta rated hydraulic oil filter designed for long life.

The following list of hydraulic fluids are compatible and can be mixed with Crown hydraulic fluid. MIXING OTHER OILS THAT ARE NOT INCLUDED ON THIS LIST COULD CAUSE GELLING AND DAMAGE TO THE HYDRAULIC COMPONENTS. If another type of oil is desired, then the system must be completely drained and flushed first.

Appropriate replacements:
ISO 46: Recommend for running in ambient air temperatures of 32°F-110°F, and it contains a kinematic viscosity rating around 46 cSt at 40°C. (1cSt = 1mm²/s)

- Mobil DTE 25
- Mobil DTE 15M
- Amoco Rykon Premium Oil ISO 46
- Chevron Rykon Premium Oil ISO 46
- Conoco Hydroclear AW MV 46
- Exxon Univis N 46
- Pennzoil AWX MV 46
- Shell Tellus 52 M46
- Shell Tellus 52 V46
- Texaco Rando HDZ 46

TV60R-HD Hydraulic Oil Cooler

- Make sure that the oil cooler assembly is kept free of debris. Clean as necessary.

Remote Control

- If the remote control transmitter or receiver should ever be replaced, the dip switches must be set so that the two components match.

TRANSMITTER

RECEIVER

Blower Liner

- Regularly inspect the blower liner in the blower housing for wear.
- If the blower liner wears excessively, damage may result to the blower housing.
- The blower liner is a wear item and is not covered under warranty.
- Sandy conditions will shorten the life of the blower liner.

To check the blower liner:

- Raise hopper and set the safety lock as shown in the General Safety Guide lines.
- Check the blower liner located around the inside of the blower housing.

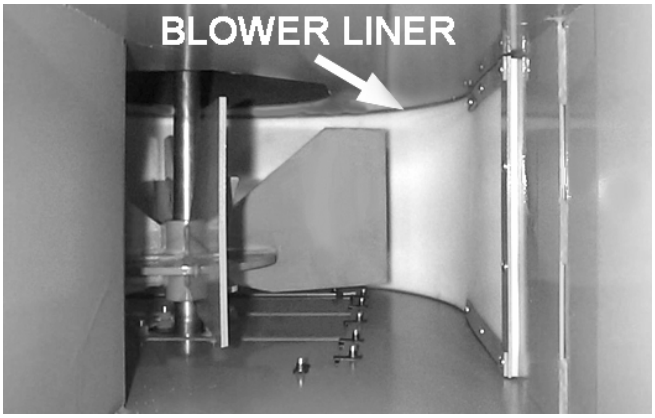

- If the blower liner is damaged or worn through, replace it before damage is done to the blower housing.

⚠ SAFETY WARNING! ⚠

Before attempting to inspect the liner, make sure the power unit is turned off, the unit has come to a complete stop, and the spark plug wire has been removed.

When working under the hopper the cylinder safety lock should be engaged to prevent the hopper from falling.

Return Air Screens

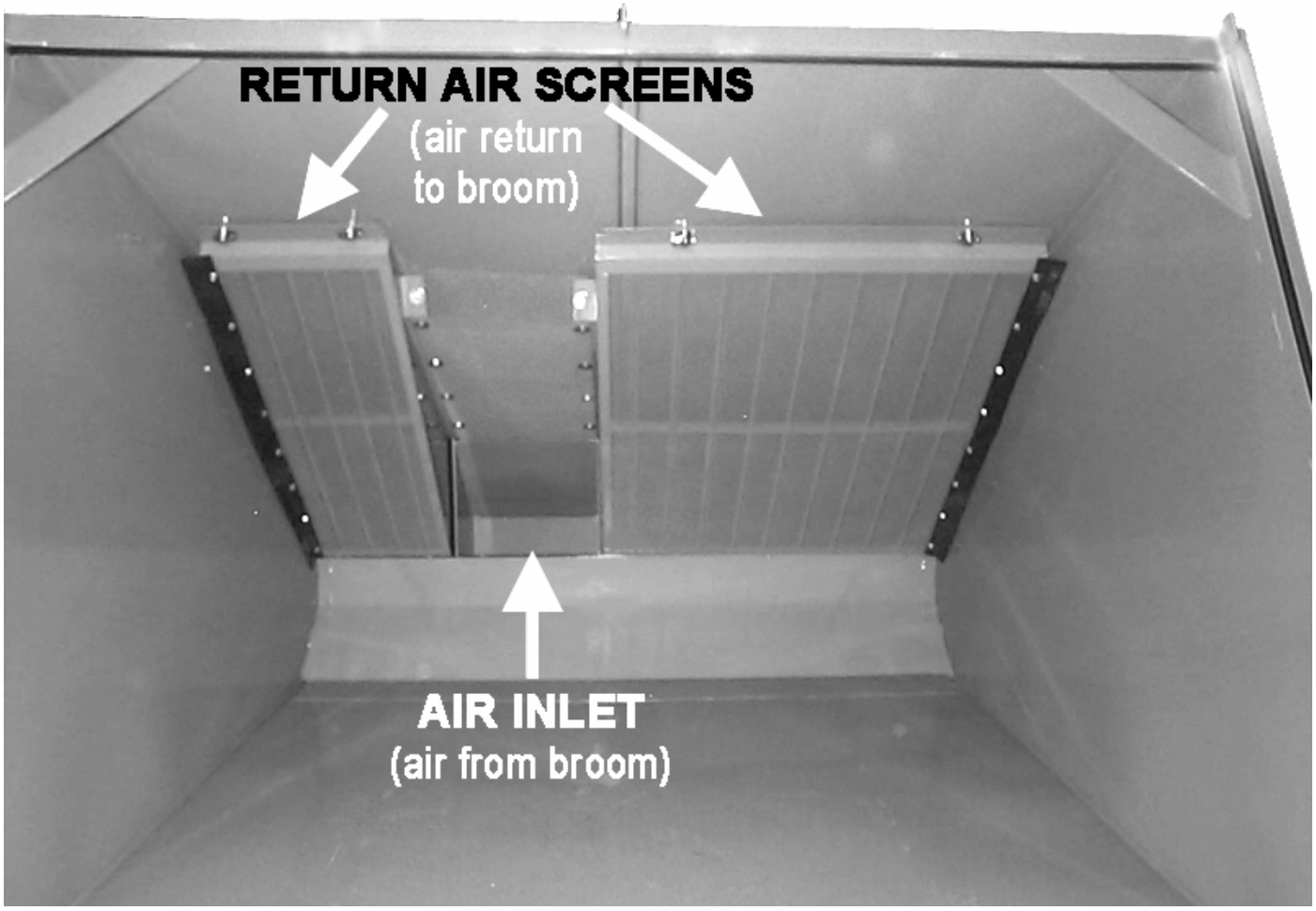

- The return air screens do not require cleaning on a regular basis.
- Material that sticks to the screens during operation will fall off when the blower is stopped. However, if debris is extremely wet or muddy, plugging may occur.
- If there is a noticeable decline in ability to pick up debris, visually inspect screens for clogging and clean, if necessary.
- The return air screens may be cleaned with a broom or water hose, and may be removed, if necessary.

⚠ SAFETY WARNING! ⚠

When it is necessary to get between the hopper and the hopper door, set the door prop to avoid being pinched.

• To set door prop, pull the door open and insert prop into the pre-cut hole in door.

TV60R-HD Service Schedule

Daily

Check hydraulic oil level……..... Crown AW46 or equivalent

Check hydraulic oil filter indicator……. Change filter element when needle is in red portion of gauge.*
Check hydraulic oil cooler……. Clean as necessary.
Visually inspect belts, bolts, fittings, and hoses …….. Tighten or replace if necessary.
Grease……. See Service & Maintenance Section.
Check tire pressure…….…….. Inflate to 30-32 psi.

Annually or 500 Hours

Change hydraulic oil……. 20 gallons

• The TV60R-HD is equipped with a Hydac, 10 micron, beta rated, hydraulic filter and is designed for a long service life. When the hydraulic oil is warm and the indicator needle is in the red portion of the gauge, the filter needs to be changed.

Standard Torque Chart

SAFETY WARNING!

Refer to the Standard Torque Chart whenever bolts, nuts or screws are tightened.

Size	In-Lbs	Ft-Lbs	N-m
No. 10-24	25-35	5-7	2.8-4.0
¼ in.	60-80	18-20	7-9
5/16 in.	120-140	28-30	14-16
3/8 in.	340-360	64-74	24-27
½ in.		126-150	90-100

Note: When tightening two or more fasteners on the same part, DO NOT tighten the fasteners completely one at a time. To avoid distortion, first tighten all fasteners in sequence to one-third of torque value, then tighten to two-thirds of torque value, then tighten to full value.

Troubleshooting

Hydraulic System:

Problem:	**What to Check:**
Hydraulic function will not respond or hold its position.	• The RF receiver or transmitter may be malfunctioning. • Hydraulic cylinder seals may be worn and in need of replacement.

HARPER® TURBO VAC
Turf Sweeper

Parts

TV60R-HD

TV60R

Table of Contents

PARTS SECTION

Structure

- Frame Assy....1.1
- Wheel Assy....1.2
- Deck Arms Assy....1.3
- Attaching Deck Arms....1.4
- Fan Housing....1.5
- Air Return....1.6
- Fan Housing Assy - Liner & Flap....1.7
- Fan Housing Installation....1.8
- Hopper and Door....1.9
- Air Return Screens....1.10
- Guards & Shields....1.11
- Decals....1.12

Hydraulics

- Hydraulic Schematic....2.1
- Hydraulic Reservoir....2.2
- Hydraulic Pump Assy....2.3
- Oil Cooler Assy....2.4
- Fan Drive Hydraulics....2.5
- Deck Drive Hydraulics....2.6
- Fan and Deck Valves....2.7
- Implement Valve....2.8
- Implement Drive Hydraulics....2.9

Electrical

- Remote and Receiver....3.1
- Wiring Schematic....3.2

Attachments

- Verticut Rotor....4.1
- Verticut Rotor w/ Carbide Tip Baldes....4.2
- Ringer Rotor....4.3
- Broom Rotor....4.4

Frame Assembly

Parts List			
ITEM	QTY	PART #	DESCRIPTION
1	4	110362	U-BOLT, 5/16
2	2	110364	BOLT, 1-8 X 7.0
3	2	110602	NUT, 1-8 LOCK NYLON INSERT
4	8	110603	NUT, 5/16-18 LOCK (NYLON)
5	1	110639	Nut, 5/8-11, Lock Automation
6	1	110562	Bolt, 5/8-11 X 4.5 Hhcs Gr 5 Zinc
7	2	413001	HUB COMPLETE, 35-6LM
8	2	510174	GREASE ZERK, 1/4-28 ST
9	4	922006	BUSHING, 1.75 X 1 X .75
10	2	943053	WHEEL & TIRE ASSEMBLY
11	2	970370	BROOM LIFT BUSHING
12	1	975098	BROOM LIFT WELDMENT
13	1	975435	FRAME WELDMENT, TV60R HD
14	1	975436	WELDMENT, TV60R HD HITCH

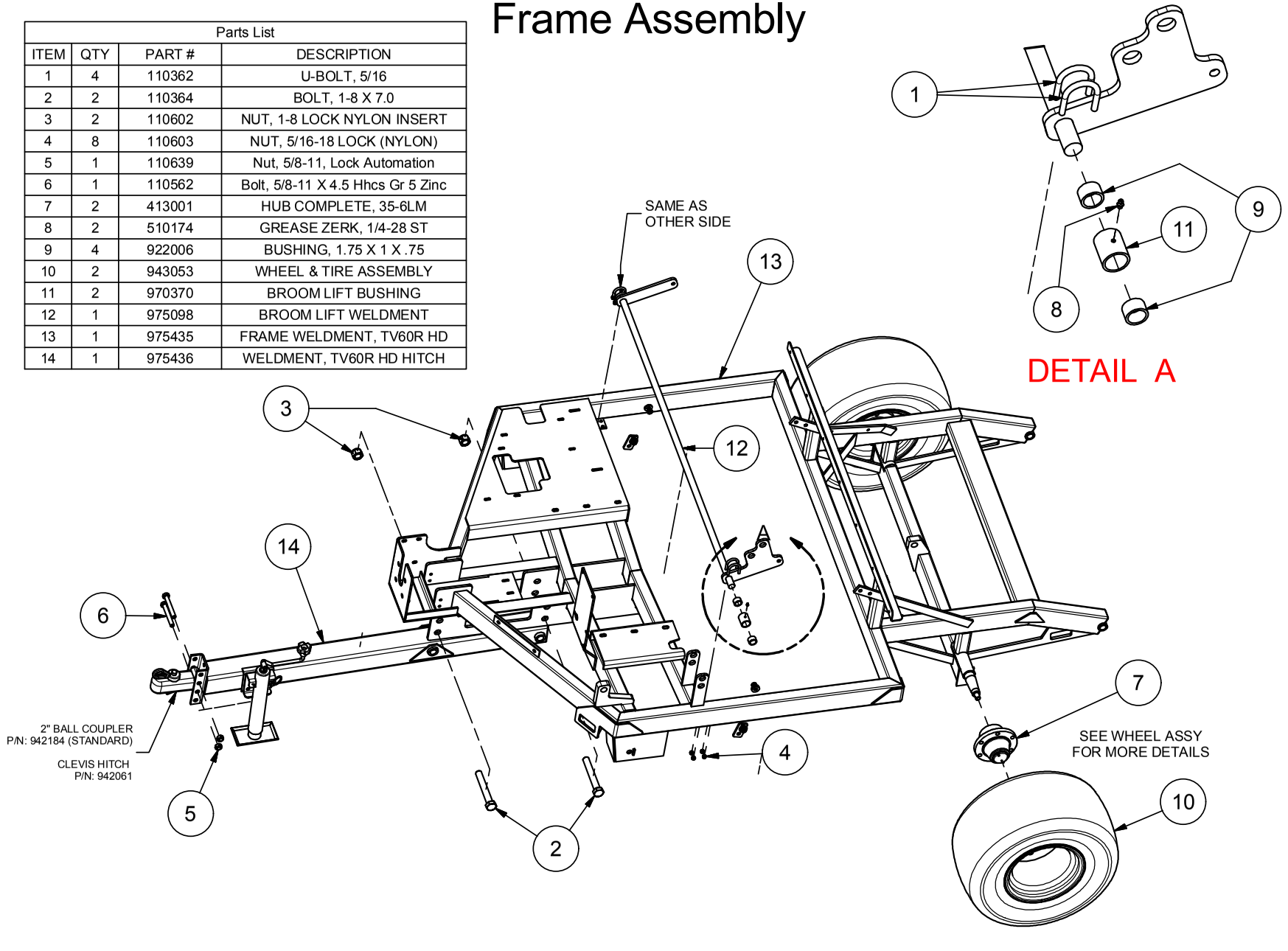

7/12/2017

WHEEL & HUB ASSEMBLY

Parts List			
ITEM	QTY	PART #	DESCRIPTION
1	1	110613	NUT, 3/4-16, CASTLE
2	1	110654	SPINDLE WASHER
3	6	113006	Stud 9/16-18
4	6	113007	Nut 9/16-18
5	1	410103	OUTER RACE
6	1	410104	INNER RACE
7	1	410105	SEAL
8	1	410111	HUB
9	1	410112	DUST CAP
10	1	410114	INNER BEARING
11	1	410115	OUTER BEARING
12	1	413001	HUB ASSY
13	1	510175	COTTER PIN, 3/16 X 2
14	1	943053	TURF WHEEL AND TIRE ASSEMBLY
15		942072	Wheel, 12 X 10.5; 6 On 6, White w/-2.0
16		342020	Tire, 26 X 12 X 12/6 Titan

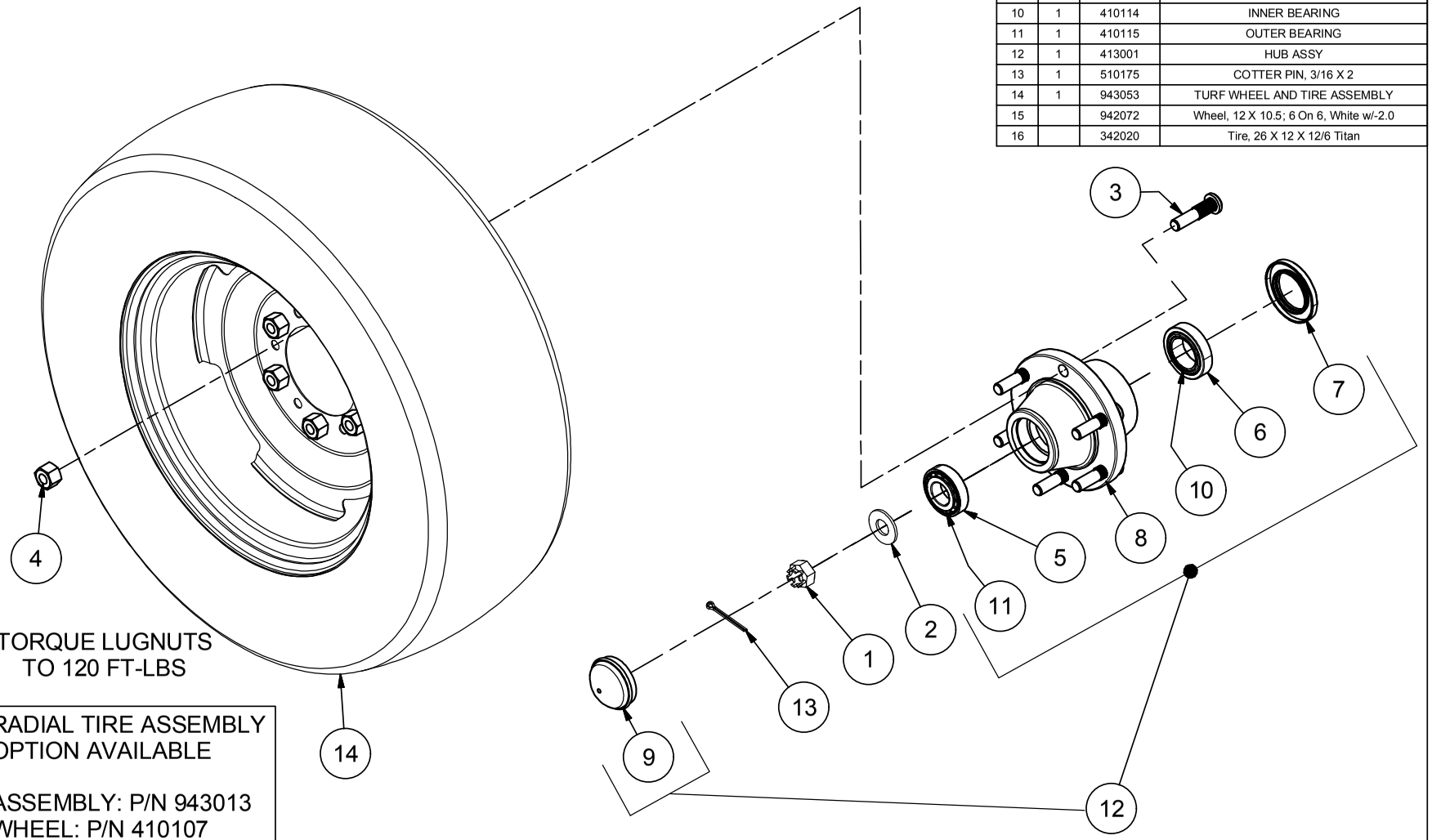

TORQUE LUGNUTS
TO 120 FT-LBS

RADIAL TIRE ASSEMBLY
OPTION AVAILABLE

ASSEMBLY: P/N 943013
WHEEL: P/N 410107
TIRE: P/N 942090

7/12/2017

HARPER TURF EQUIPMENT

Deck Arms Assembly

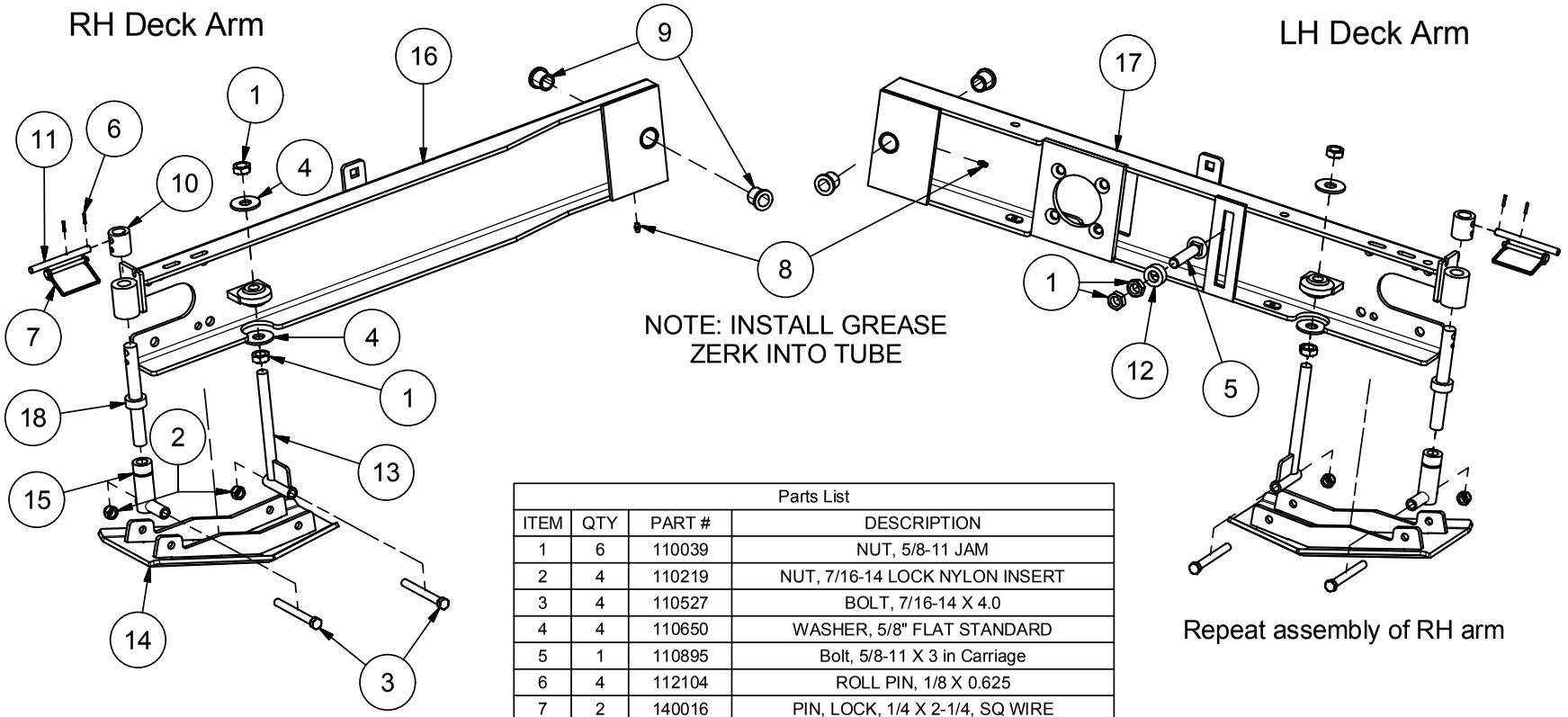

Parts List			
ITEM	QTY	PART #	DESCRIPTION
1	6	110039	NUT, 5/8-11 JAM
2	4	110219	NUT, 7/16-14 LOCK NYLON INSERT
3	4	110527	BOLT, 7/16-14 X 4.0
4	4	110650	WASHER, 5/8" FLAT STANDARD
5	1	110895	Bolt, 5/8-11 X 3 in Carriage
6	4	112104	ROLL PIN, 1/8 X 0.625
7	2	140016	PIN, LOCK, 1/4 X 2-1/4, SQ WIRE
8	6	510174	GREASE ZERK, 1/4-28 ST
9	4	800128	BUSHING, IGUS, FOOT PEDAL
10	2	970855	BUSHING, ADJUSABLE SKID
11	2	970857	HANDLE, .375 X 4.25
12	1	970862	SPACER, IDLER SPROCKET
13	2	975015	WELDMENT, HEIGHT ADJUSTMENT
14	2	975144	WELDMENT, TV60 VERTICUT SKID
15	2	975145	MOUNT, ADJUSTABLE SKID
16	1	975146	WELDMENT, TV60HD RH ARM
17	1	975147	WELDMENT, TV60HD LH ARM
18	2	975148	WELDMENT, ADJUSTABLE SCREW

11/4/2015

Attaching Deck Arms

Parts List		
ITEM	PART #	DESCRIPTION
1	110320	NUT, 3/4-10 NYLOCK
2	110379	BOLT, 1/2-13 X 2.0
3	110383	BOLT, 3/4-10 X 6.0
4	110615	NUT, 1/2-13, UNITORQUE LOCK
5	110662	WASHER, 1/2" FLAT SPECIAL 1.25od
6	110678	WASHER, 3/4" FLAT SAE
7	112070	Bolt, 1/2-13 X 1.25 in Carriage
8	970841	CHAIN, DECK LIFT, 3/8 X 9 LINKS
9	975146	WELDMENT, TV60HD RH ARM
10	975147	WELDMENT, TV60HD LH ARM

NOTE: ATTACH RIGHT ARM THE SAME WAY - EXCEPT ATTACH THE CHAIN TO THE INSIDE OF THE TAB FOR CLEARANCE

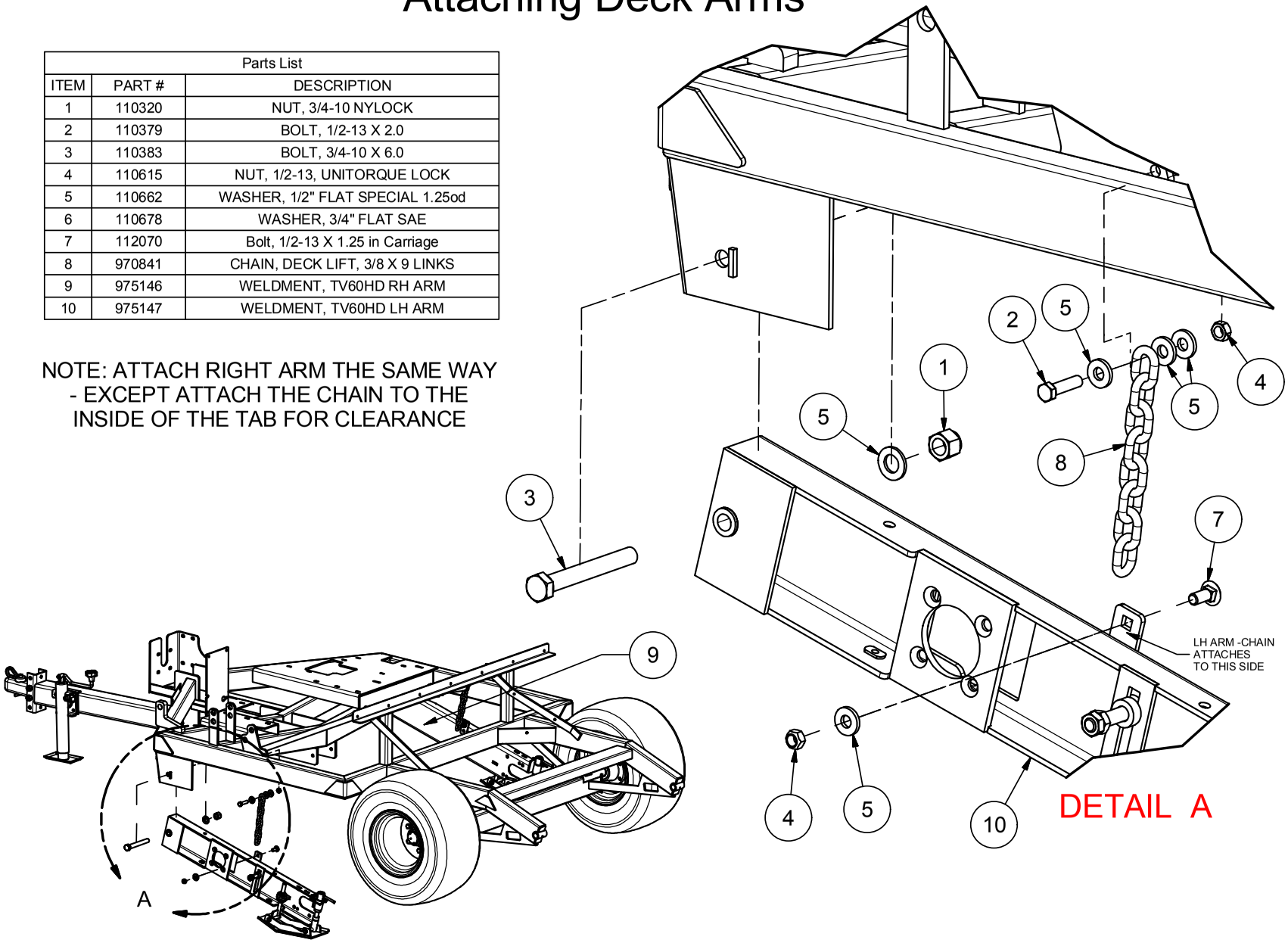

11/30/2015

Fan Housing Assembly

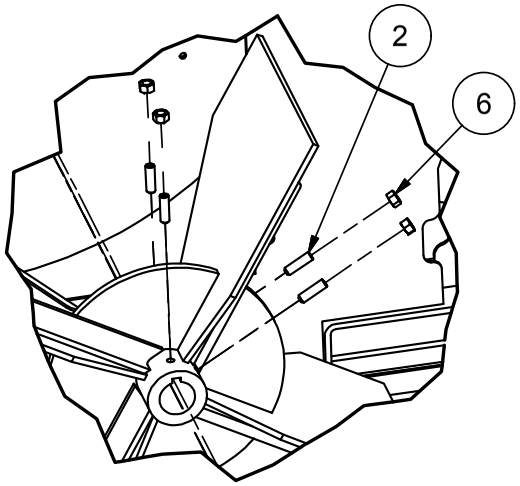

DETAIL A

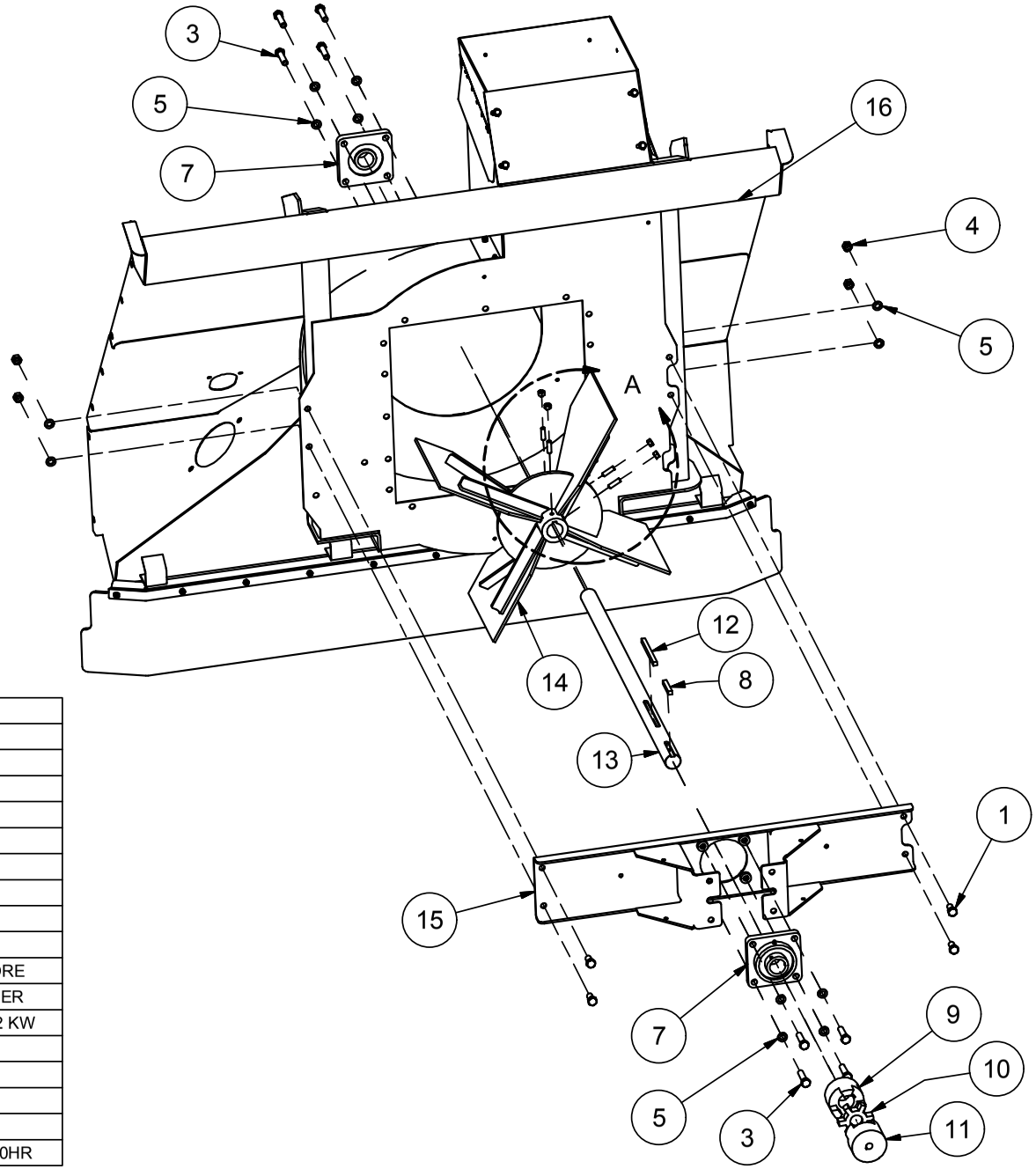

Parts List			
ITEM	QTY	PART #	DESCRIPTION
1	4	110086	BOLT, 1/2-13 X 1.0
2	4	110093	SetScrew, 3/8-16 X 1.25
3	8	110379	BOLT, 1/2-13 X 2.0
4	4	110610	NUT, 1/2-13
5	12	110666	WASHER, 1/2" LOCK
6	4	110826	NUT, 3/8-16 GR 5
7	2	410851	BEARING, 4FNG 1 1/2"
8	1	411120	KEY, 3/8 X 3/8 X 2.25
9	1	922068	HUB, COUPLING 1-1/2" BORE
10	1	922069	LOVEJOY COUPLER SPIDER
11	1	922098	COUPLING, 5/8" BORE, 5/32 KW
12	1	940113	KEY, 3/8 X 5
13	1	970287	BLOWER SHAFT
14	1	975001	FAN ASSY WLDMNT
15	1	975101	BEARING CHANNEL
16	1	975119	BLOWER WELDMENT, TV60HR

10/5/2016

975191 | REV: NC

AIR RETURN

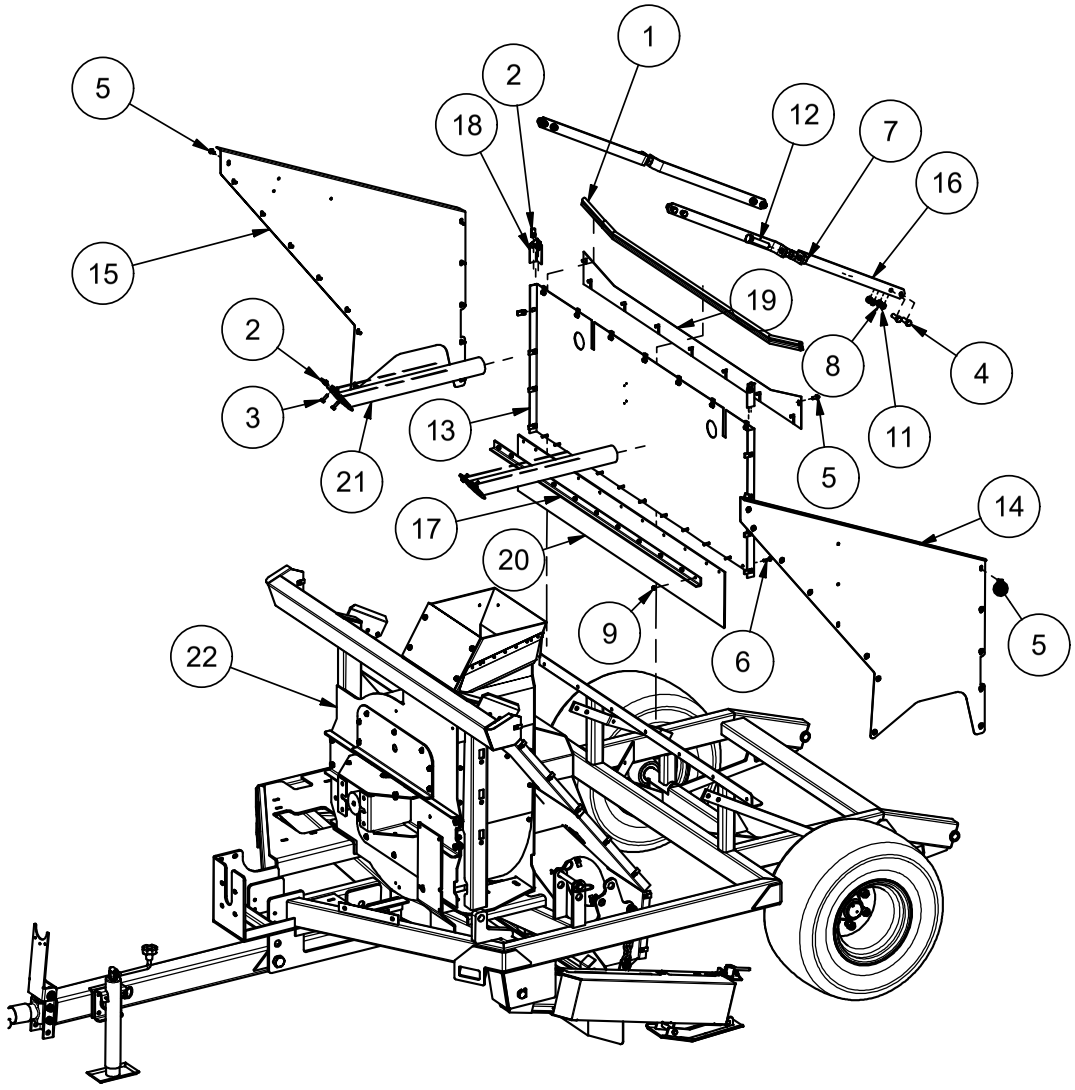

Parts List			
ITEM	QTY	PART #	DESCRIPTION
1	1	100360	MOULDING, EDGE, AIR INLET
2	38	110319	NUT, 5/16-18 U-TYPE .75L
3	4	110423	BOLT, 5/16-18 X 1.0
4	14	110429	BOLT, 1/2-13 X 1.5
5	34	110444	BOLT, 5/16-18 X 0.75, WIZ FLANGE
6	11	110464	BOLT, 1/4-20 X 1.0
7	6	110596	NUT, 3/4-10
8	14	110610	NUT, 1/2-13
9	11	110630	NUT, 1/4-20 LOCK (NYLON INSERT)
11	14	110666	WASHER, 1/2" LOCK
12	2	110713	BOLT, 3/4-10 X 3.5 TAP
13	1	970390	BACK AIR RETURN
14	1	970391	LEFT AIR RETURN
15	1	970392	RIGHT AIR RETURN
16	4	970393	TRUSS BAR
17	1	970394	FLAP RETAINER
18	2	970542	ANGLE, AIR RETURN
19	1	970545	REAR SEAL
20	1	970685	DEBRIS FLAP MAIN
21	2	975111	HOSE TUBE
22	1	975434	ASSEMBLY, FAN

Fan Housing Assembly

(Liner & Debris Flap)

Parts List			
ITEM	QTY	PART #	DESCRIPTION
1	4	110069	WASHER, 5/16" FLAT SAE
2	4	110319	NUT, 5/16-18 U-TYPE .75L
3	12	110326	Bolt, 1/4-20 X 1 in Carriage
4	2	110327	NUT, 5/16-18 WING
5	2	110422	BOLT, 5/16-18 X .75
6	4	110423	BOLT, 5/16-18 X 1.0
7	11	110464	BOLT, 1/4-20 X 1.0
8	10	110603	NUT, 5/16-18 LOCK (NYLON)
9	23	110630	NUT, 1/4-20 LOCK (NYLON INSERT)
10	1	970086	CLAMP BAR
11	2	970161	BLOWER LINER RETAINER
12	2	970162	BLOWER LINER RETAINER
13	2	970205	NOZZLE ACCESS COVER
14	1	970558	BLOWER PLATE
15	1	972008	DEBRIS FLAP
16	1	972010	BLOWER LINER. .250 UHMW
17	1	975119	BLOWER WELDMENT, TV60HR

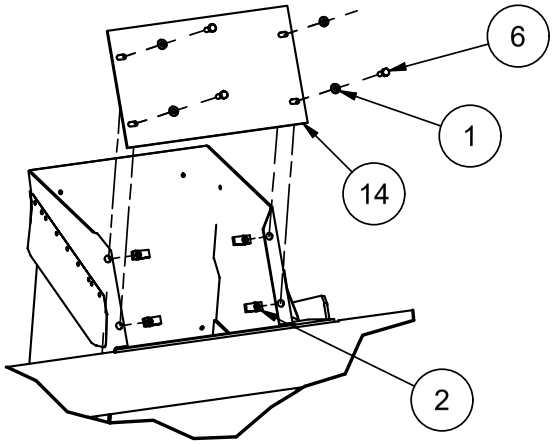

DETAIL C

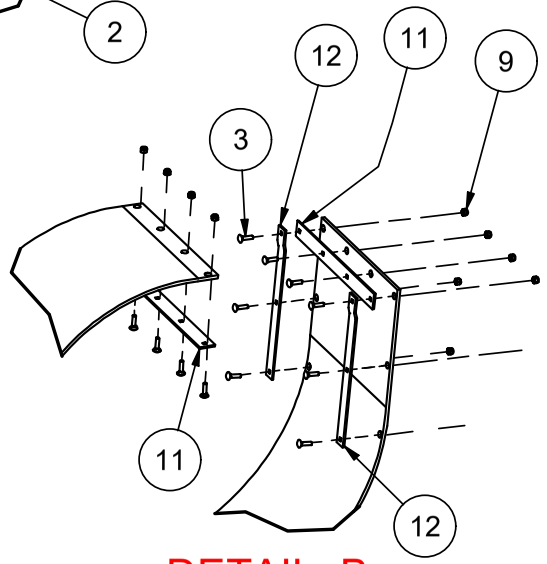

DETAIL B

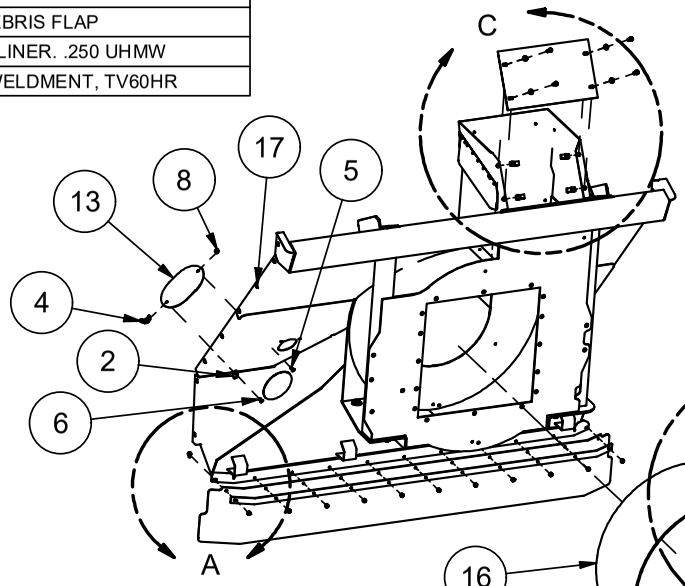

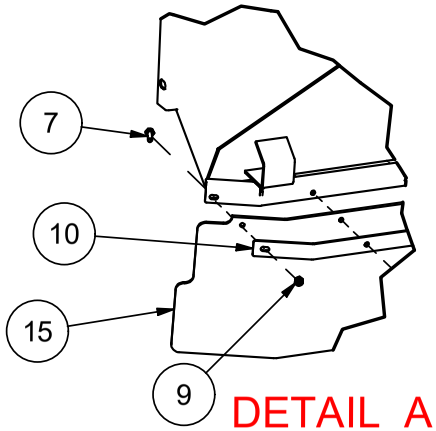

DETAIL A

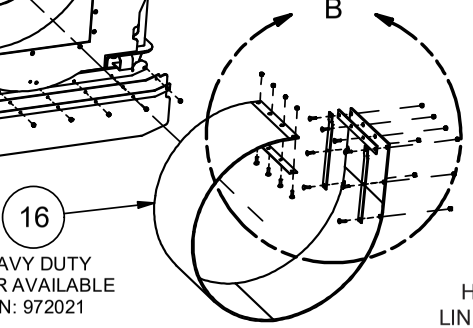

HEAVY DUTY
LINER AVAILABLE
P/N: 972021

HEAVY DUTY
LINER AVAILABLE
P/N: 972021

11/4/2015

975191	REV: NC

FAN HOUSING INSTALLATION

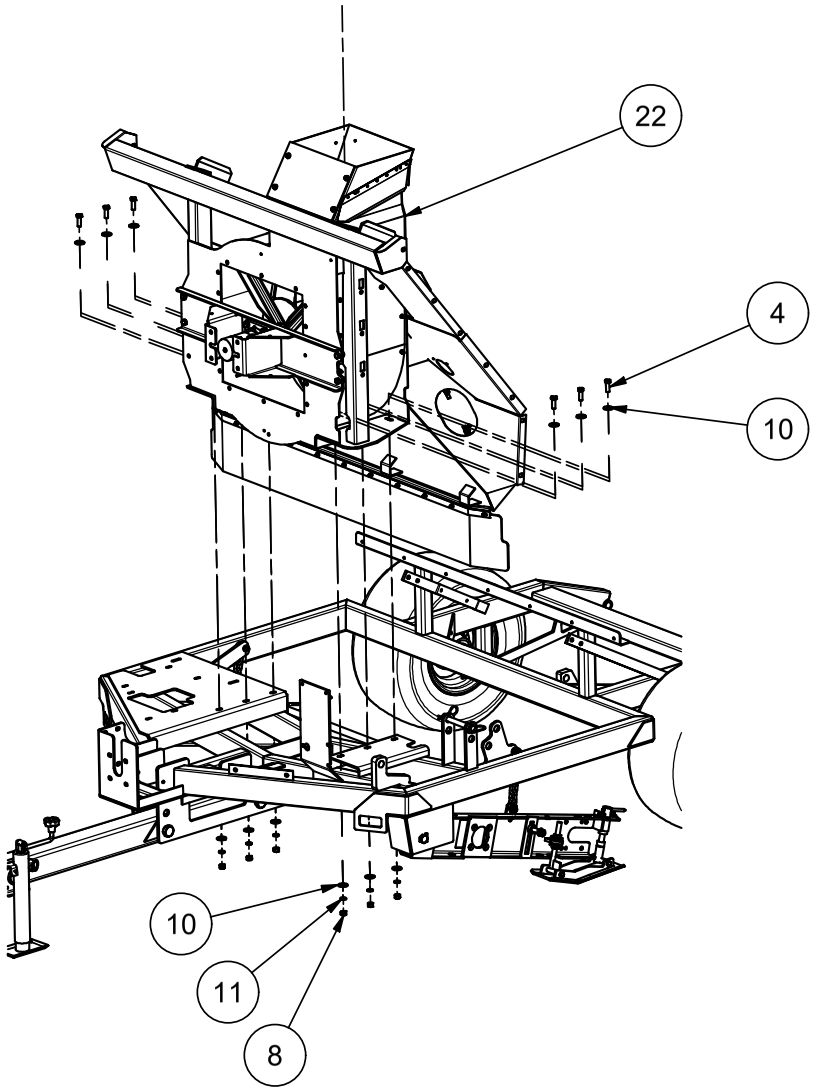

Parts List			
ITEM	QTY	PART #	DESCRIPTION
4	14	110429	BOLT, 1/2-13 X 1.5
8	14	110610	NUT, 1/2-13
10	12	110658	WASHER, 1/2" FLAT STANDARD
11	14	110666	WASHER, 1/2" LOCK
22	1	975434	ASSEMBLY, FAN

HOPPER & DOOR

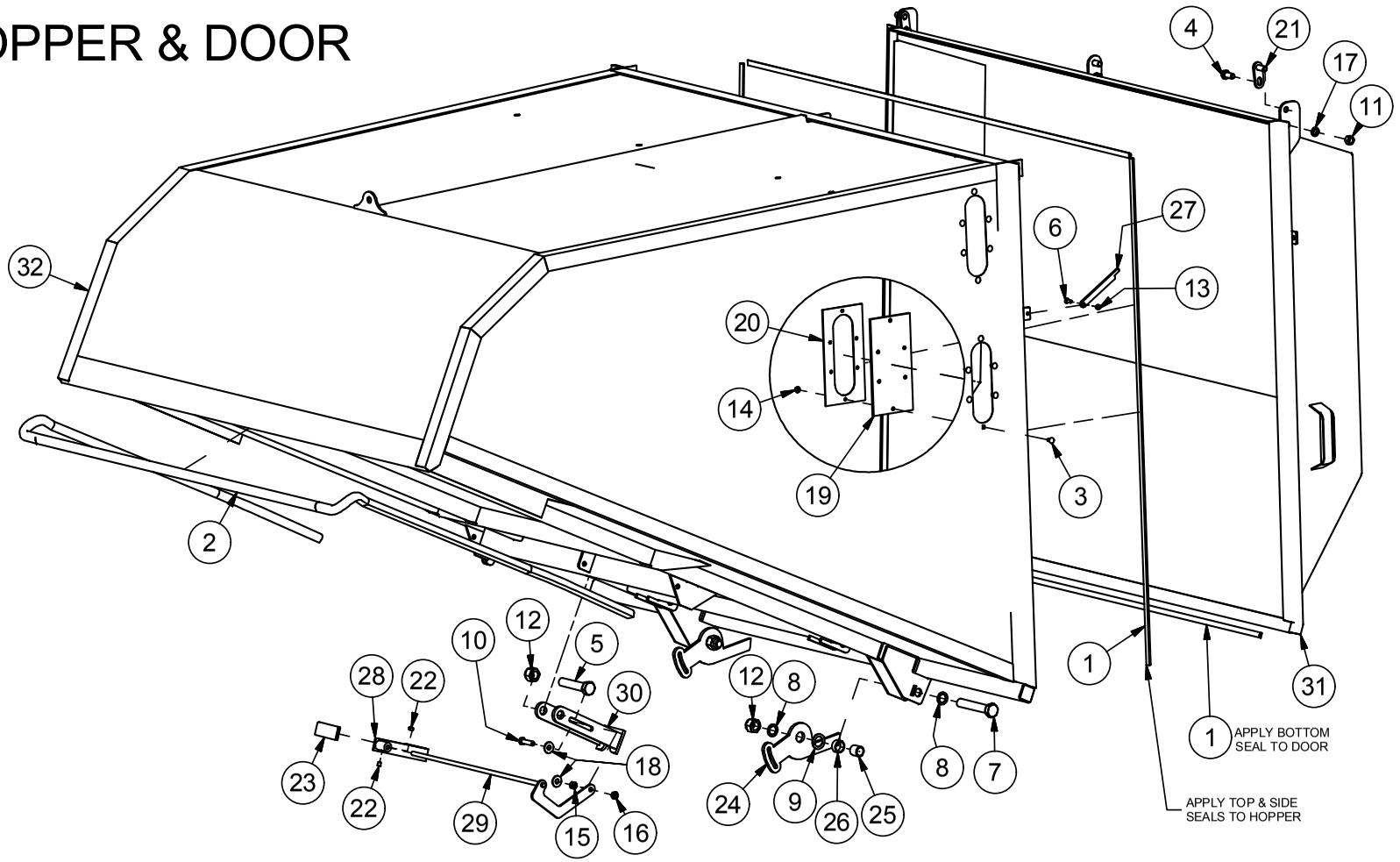

Parts List			Parts List			Parts List		
ITEM	PART #	DESCRIPTION	ITEM	PART #	DESCRIPTION	ITEM	PART #	DESCRIPTION
1	100623	D SEAL, .375 X .625	12	110602	NUT, 1-8 LOCK NYLON INSERT	23	910044	COVER, VINYL .25 X 1.5 X 4 GRIP
2	102004	D SEAL, 1.00 X 1.00	13	110603	NUT, 5/16-18 LOCK (NYLON)	24	970148	HOPPER DOOR LATCH
3	110020	Bolt, 5/16-18 X 0.75 in Carriage	14	110606	NUT, 5/16-18 WIZ FLANGE	25	970149	LATCH PIVOT BUSHING
4	110026	BOLT, 5/8-11 X 1.25	15	110610	NUT, 1/2-13	26	970151	LATCH PIVOT SPACER
5	110208	BOLT, 1-8 X 5.0	16	110615	NUT, 1/2-13, UNITORQUE LOCK	27	970211	BAR, PROP
6	110328	BOLT, 5/16-18 X 1 SHFHCS	17	110655	WASHER, 5/8" LOCK	28	975055	HANDLE WELDMENT, DUMP CYL LOCK
7	110334	BOLT, 1-8 X 6.0	18	110658	WASHER, 1/2" FLAT STANDARD	29	975056	SHAFT WELDMENT, DUMP CYL LOCK
8	110335	WASHER, 1" FLAT MACHINE	19	311691	SIGHT GLASS, HOPPER	30	975057	STOP WLDMNT, CYLINDER LOCK
9	110336	WASHER, 1-1/4 FLAT MACHINE 10GA	20	311692	Backing Plate, Sight Glass	31	975090	DOOR WLDMNT
10	110379	BOLT, 1/2-13 X 2.0	21	315257	PIN WELDMENT, HOPPER DOOR	32	975091	HOPPER WELDMENT
11	110597	NUT, 5/8-11 HEX	22	510161	SetScrew, 3/8-16 X 0.5			

11/30/2015

AIR RETURN SCREENS

Parts List		
ITEM	PART #	DESCRIPTION
1	110038	WASHER, 1" FLAT STANDARD
2	110049	WASHER, 5/16 X 1.50 FENDER
3	110069	WASHER, 5/16" FLAT SAE
4	110305	Pin, Lynch 7/16 x 1 3/4
5	110423	BOLT, 5/16-18 X 1.0
6	110603	NUT, 5/16-18 LOCK (NYLON)
7	110673	WASHER, 1/4" FLAT STANDARD
8	710586	SCREW, 1/4 X 1 TEK SELF-TAP
9	942161	PIN, STABILIZER
10	970366	MIDDLE SCREEN
11	970729	DEBRIS FLAP-RETURN SCREEN
12	975099	LEFT RETURN SCREEN
13	975100	RIGHT RETURN SCREEN

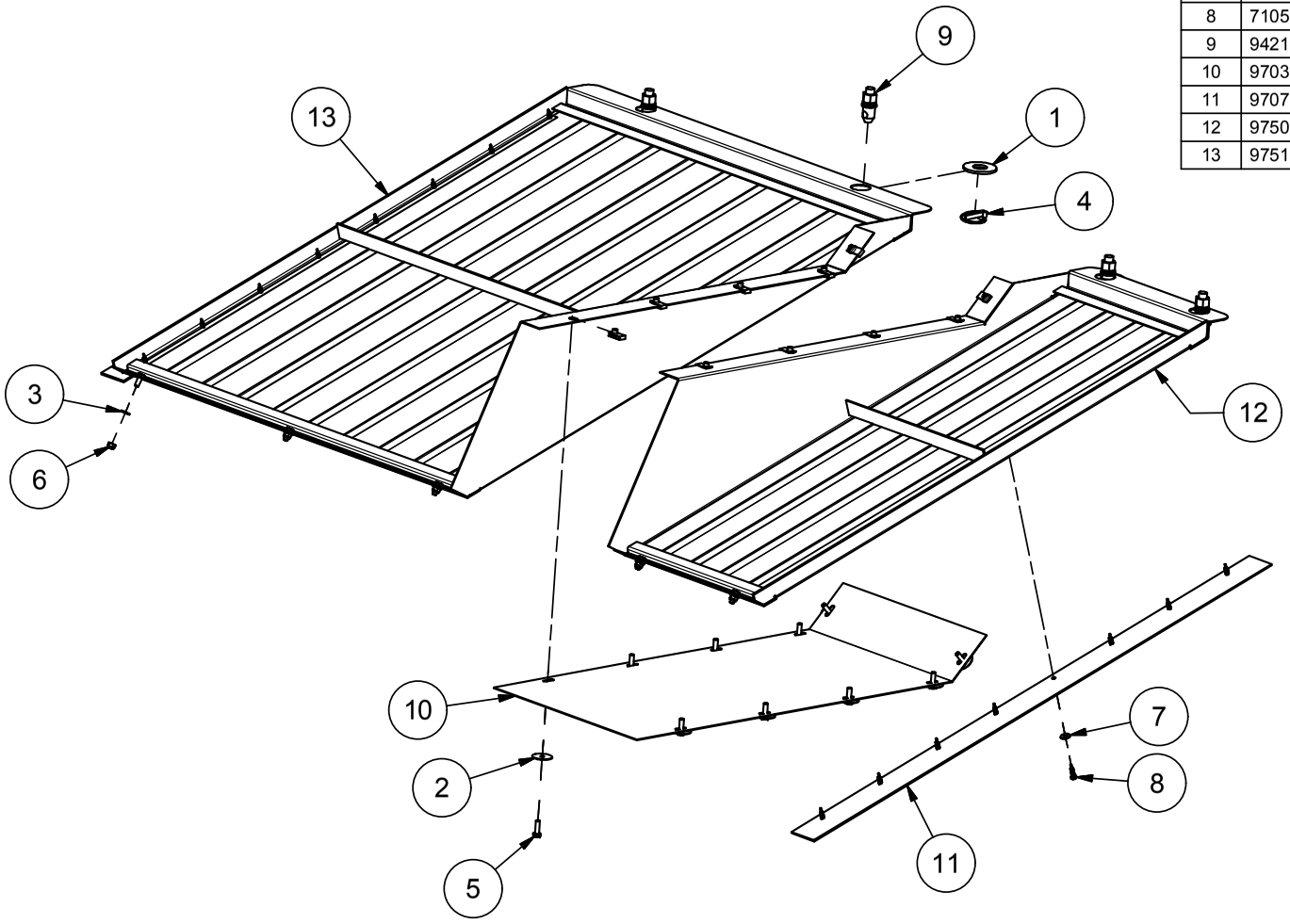

11/30/2015

GUARDS & SHIELDS

Parts List			Parts List		
ITEM	PART #	DESCRIPTION	ITEM	PART #	DESCRIPTION
1	100613	SEAL, .50 X .187	9	302060	SWIVEL, GARDEN HOSE-TO-PIPE
2	102015	HITCH PIN, 3/4 X 6 W/KEEPER	10	302061	LOCKNUT, 3/4 NPT
3	110407	BOLT, 5/8-11 X 5.0	11	302062	PLUG, GARDEN HOSE
4	110437	BOLT, 3/8-16 X 0.75, WIZ FLANGE	12	970506	COVER PANEL
5	110444	BOLT, 5/16-18 X 0.75, WIZ FLANGE	13	970508	FAN MOTOR SHIELD
6	110606	NUT, 5/16-18 WIZ FLANGE	14	970833	PANEL, FAN ACCESS
7	110639	NUT, 5/8-11, UNITORQUE LOCK	15	970858	SHIELD, TV60HD CHAIN
8	110663	WASHER, 5/8" FLAT SAE	16	970863	BRKT, PTO SHAFT HOLDER

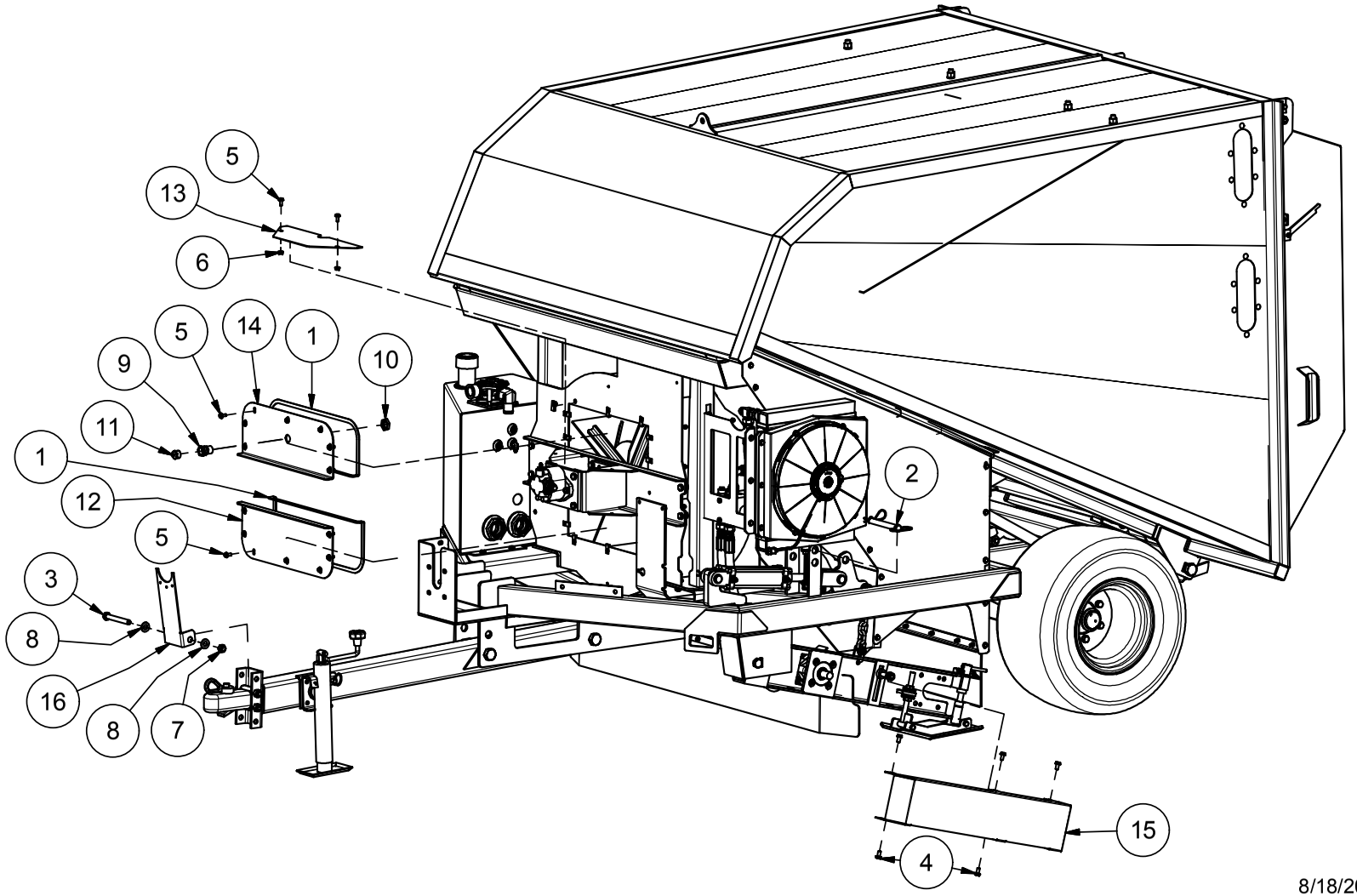

8/18/2016

905106	REV: C

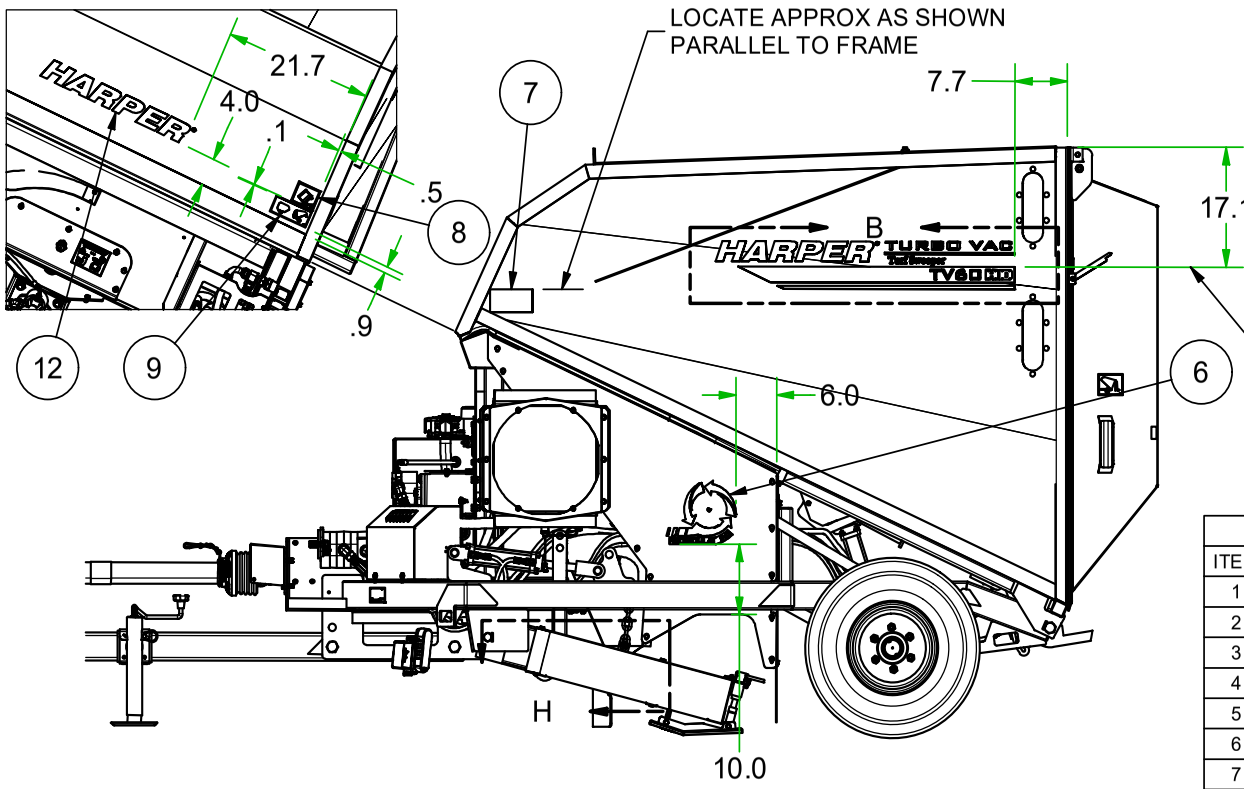

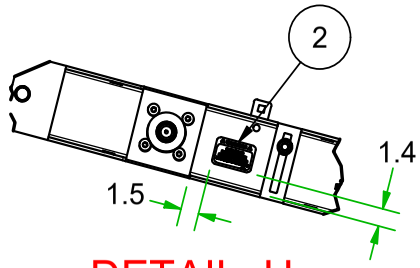

DETAIL H
SHIELD NOT SHOWN

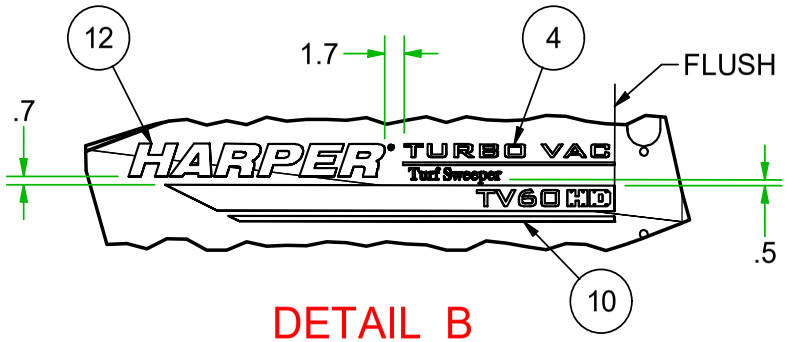

DETAIL B

Parts List			
ITEM	QTY	PART #	DESCRIPTION
1	1	202134	Decal, Prop 65, Short Form
2	2	400014	DECAL, SHIELD REMOVED
3	1	902069	DECAL, BEFORE OPERATING
4	2	902084	Decal, Turbo Vac, Turf Sweeper
5	1	902095	Decal, Check Liner Wear
6	2	902104	DECAL, RECIRCULATING
7	2	902152	DECAL, HOPPER SAFETY LOCK
8	1	902153	DECAL, ROLLOVER
9	1	902154	DECAL, OVERHEAD CLEARANCE
10	1	902193	DECAL, STRIPE LEFT TV60R HD
11	1	902194	DECAL, STRIPE RIGHT, TV60R HD
12	3	902195	DECAL, HARPER 2.87 X 24.00, BLACK GLOSS
13	1	902202	DECAL, SWITCHES, TV60R HD
14	1	902204	DECAL, ISO 46 HYDRAULIC OIL
15	1	902240	Plate, Serial Number, Harper Turf, Blue

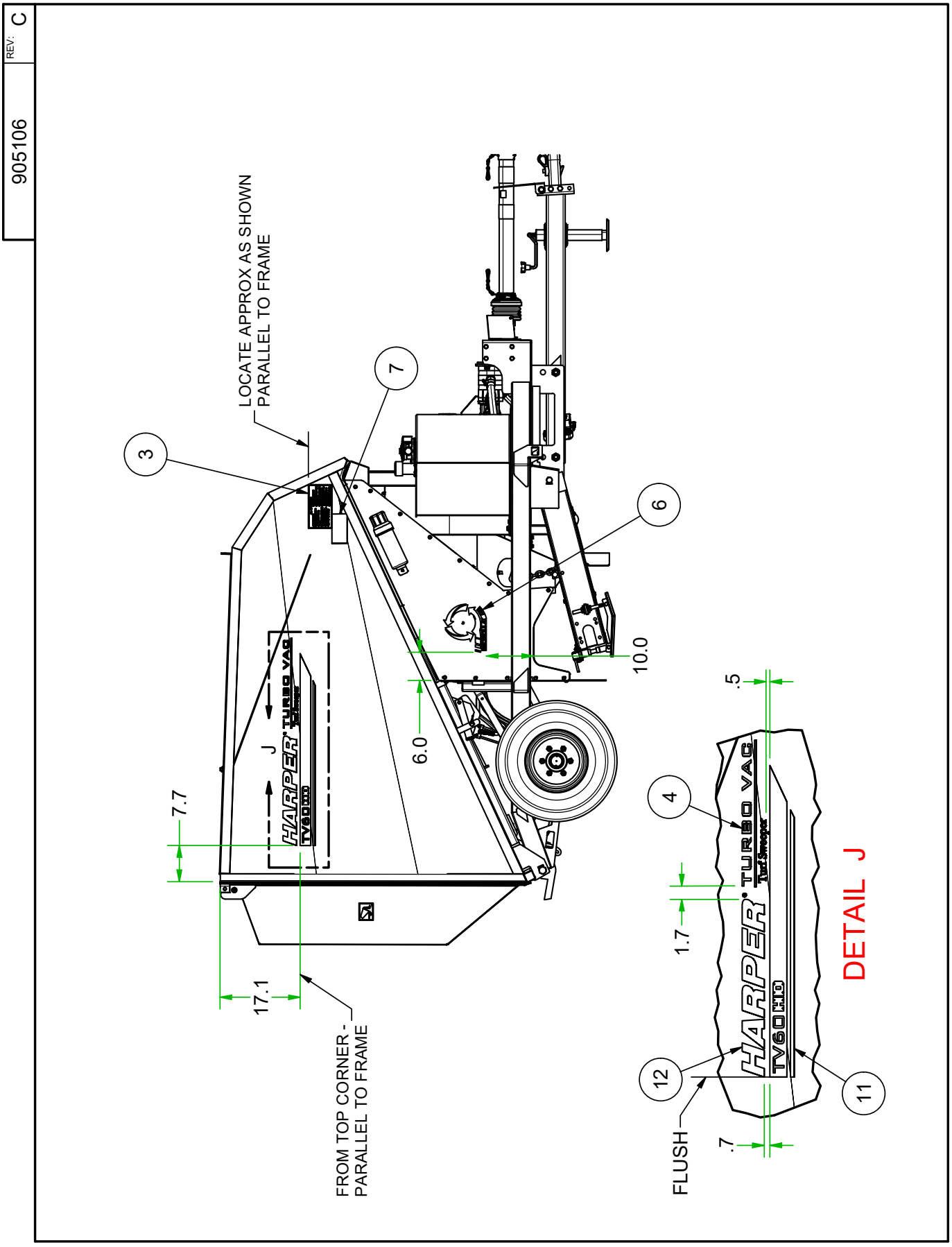
905106
REV: C
LOCATE APPROX AS SHOWN
PARALLEL TO FRAME
3
7
6
10.0
6.0
7.7
17.1
FROM TOP CORNER -
PARALLEL TO FRAME
J
HARPER TURBO VAC
TV60 CHTD
DETAIL J
4
.5
1.7
12
11
FLUSH
.7

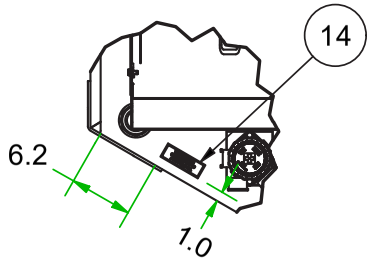

DETAIL D

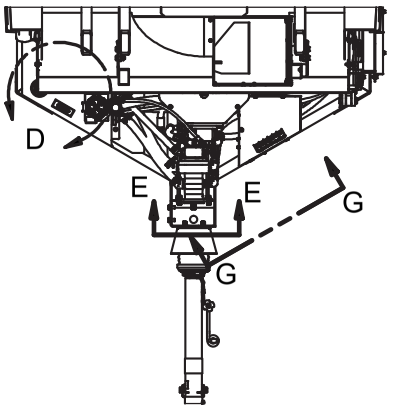

SECTION C-C

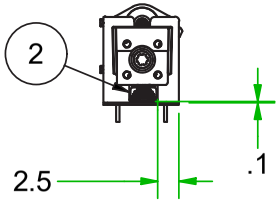

SECTION E-E
SCALE .05

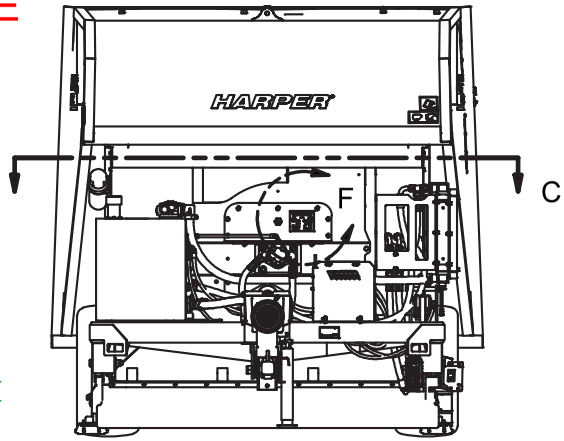

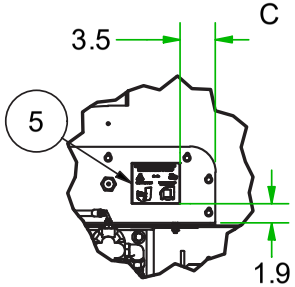

DETAIL F

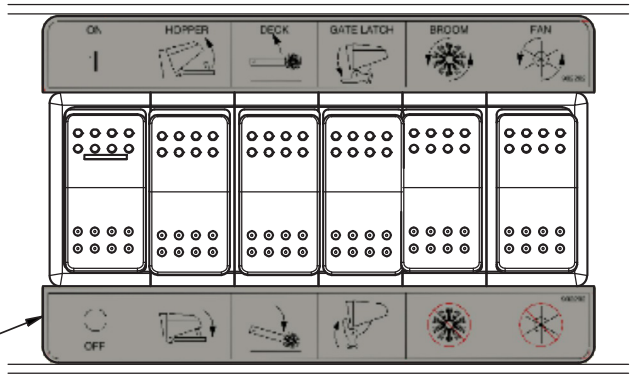

ALIGN WITH SWITCHES 13

VIEW OF SWITCH PANEL

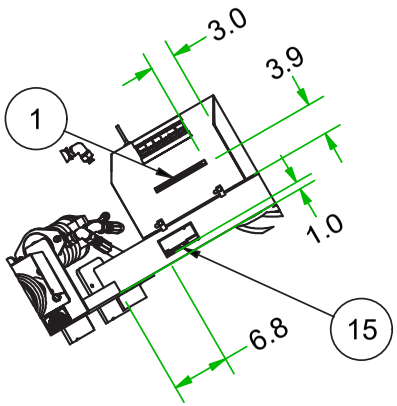

SECTION G-G

D

TV60HD HYDRAULIC SCHEMATIC
S/N: 22A11 & ABOVE

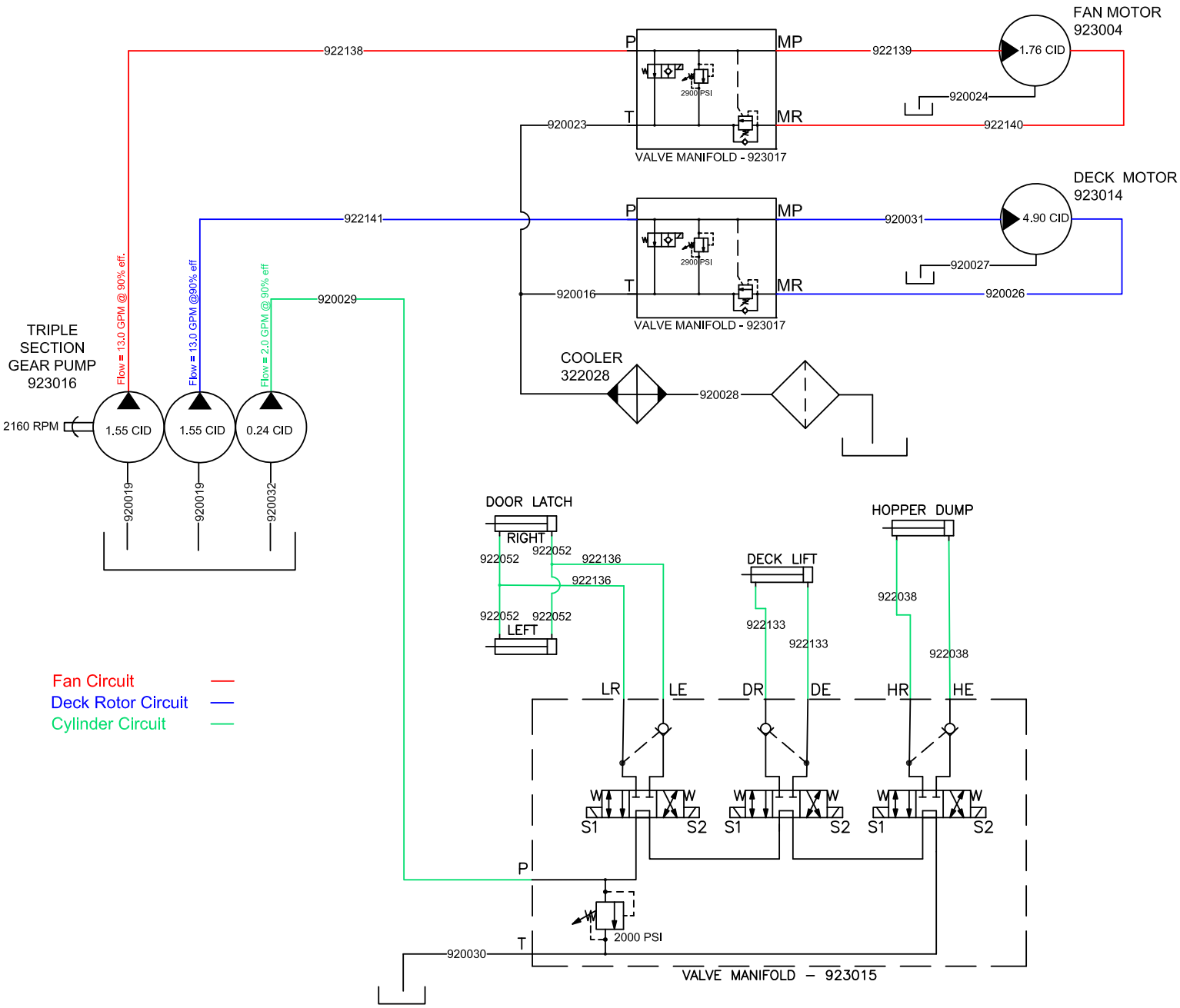

02/28/22

975432	REV: F

HYDRAULIC RESERVOIR

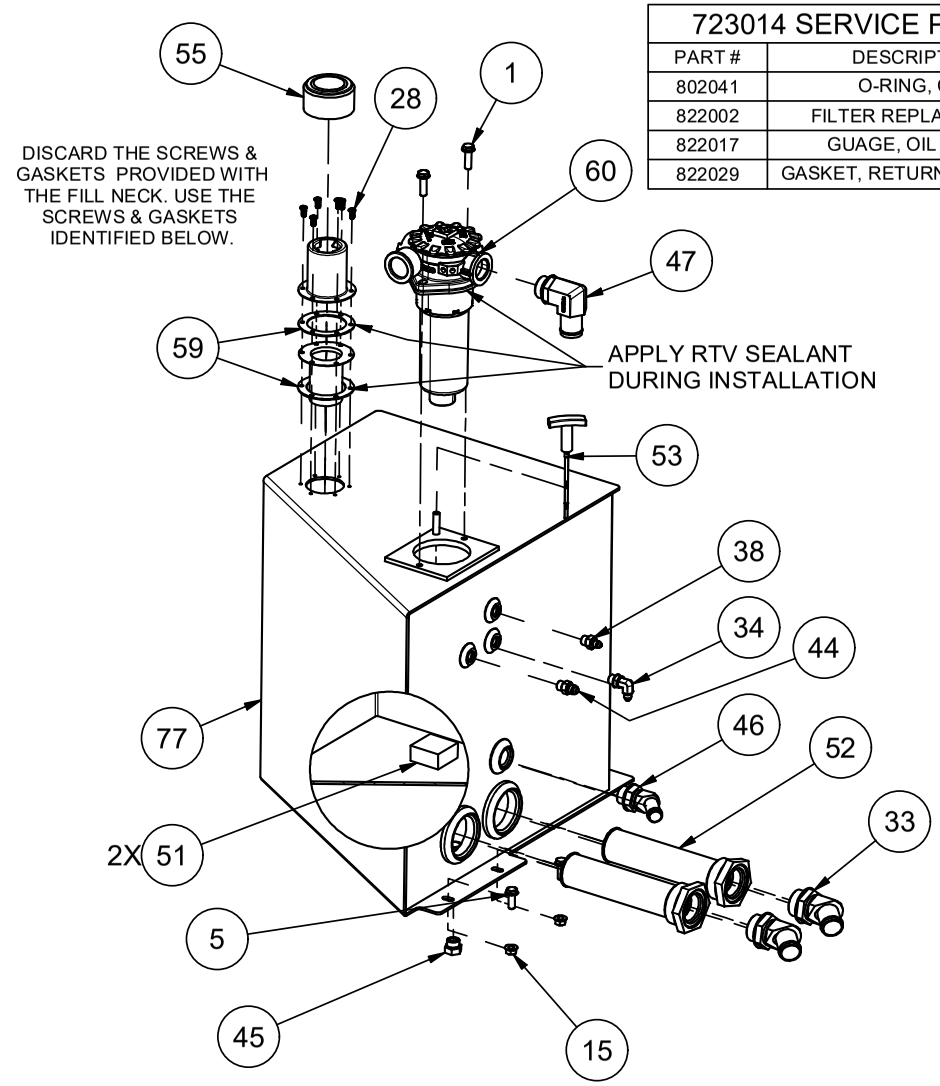

723014 SERVICE PARTS	
PART #	DESCRIPTION
802041	O-RING, CAP
822002	FILTER REPLACEMENT
822017	GUAGE, OIL FILTER
822029	GASKET, RETURN OIL FILTER

Parts List

ITEM	QTY	PART #	DESCRIPTION
1	2	110161	BOLT, 3/8-16 X 1.25, WIZ FLANGE
5	4	110440	BOLT, 3/8-16 X 1, WIZ FLANGE
15	4	110645	NUT, 3/8-16 WIZ FLANGE
28	6	112053	SCREW, 10-32 X 1/2 MACH SEAL
33	2	120189	ADAPTER, 20BH-20MB 45°
34	1	120220	ADAPTER, 4MJ-6MB90
38	2	120249	ADAPTER, 4MJ-6MB
44	9	120319	ADAPTER, 6MJ-6MB
45	1	120372	PLUG, O-RING -8, EXTERNAL HEX
46	2	120545	ADAPTER, 12BH-12MB 45°
47	2	120546	ADAPTER, 20BH-16MB90
51	2	312025	MAGNET, 2"x2"x1" RECT 15LB
52	2	322012	STRAINER, SUCTION, SAE-32/-20, 25 GPM
53	1	322025	DIP STICK - TV30, HYDRAULIC TANK
55	1	322073	FILL NECK ASSY
59	2	722076	Seal, Buna Rubber, Pressurized Fill
60	1	723014	FILTER ASSY
77	1	975437	TANK WELDMENT, TV60R HD HYD

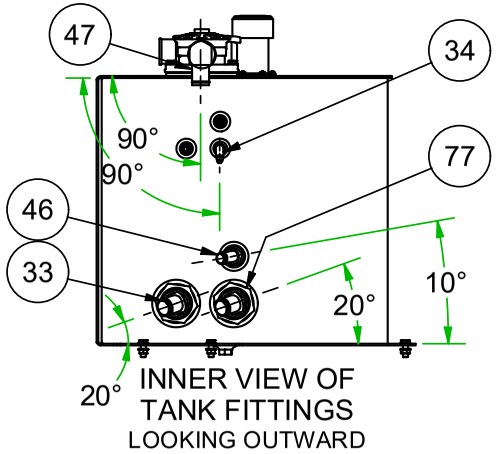

INNER VIEW OF TANK FITTINGS
LOOKING OUTWARD

PTO Drive & Pump Assembly

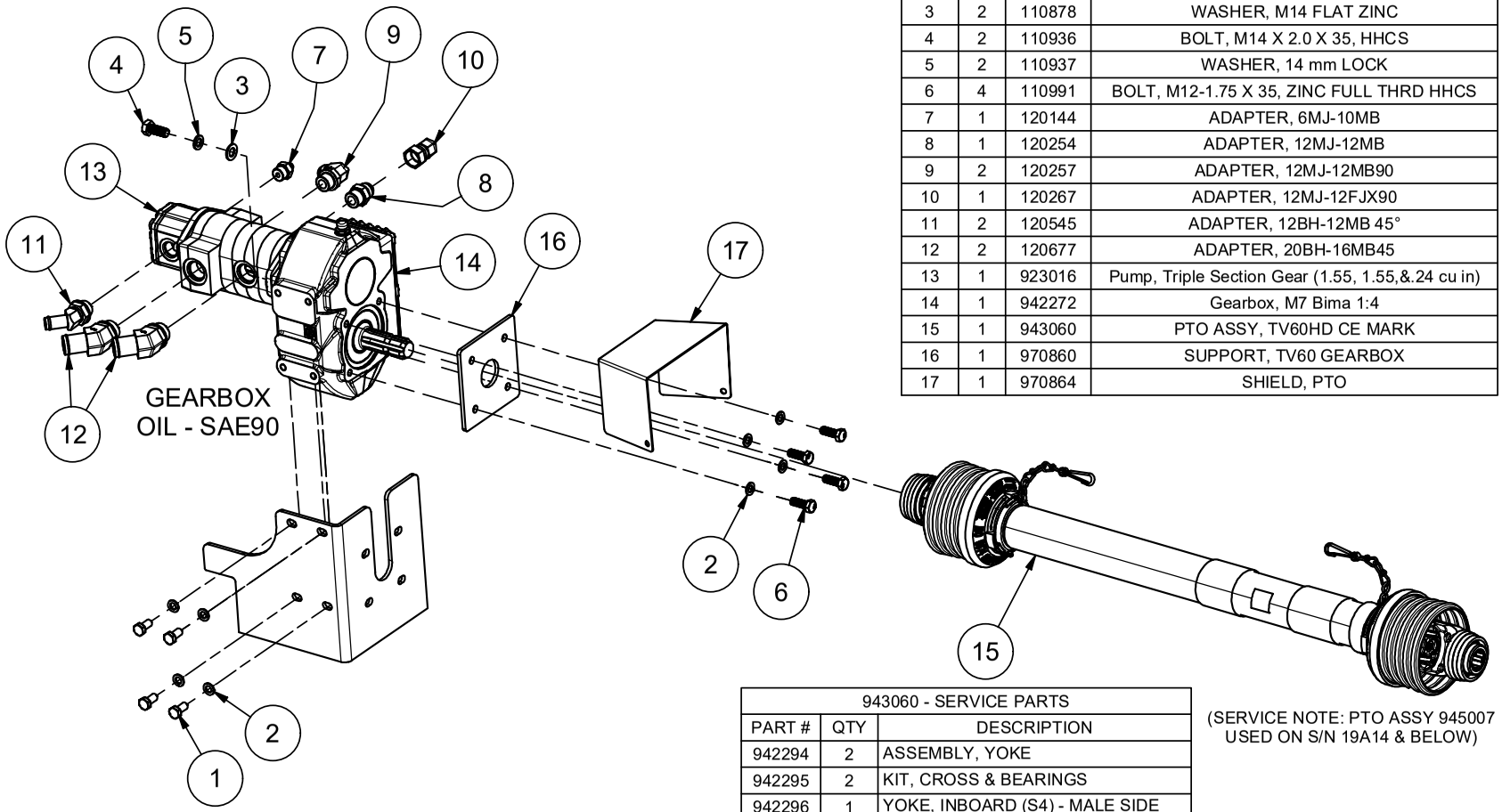

Parts List			
ITEM	QTY	PART #	DESCRIPTION
1	4	110347	BOLT, M12x1.75 x 25 Gr 10.9
2	8	110690	WASHER, 12 mm LOCK
3	2	110878	WASHER, M14 FLAT ZINC
4	2	110936	BOLT, M14 X 2.0 X 35, HHCS
5	2	110937	WASHER, 14 mm LOCK
6	4	110991	BOLT, M12-1.75 X 35, ZINC FULL THRD HHCS
7	1	120144	ADAPTER, 6MJ-10MB
8	1	120254	ADAPTER, 12MJ-12MB
9	2	120257	ADAPTER, 12MJ-12MB90
10	1	120267	ADAPTER, 12MJ-12FJX90
11	2	120545	ADAPTER, 12BH-12MB 45°
12	2	120677	ADAPTER, 20BH-16MB45
13	1	923016	Pump, Triple Section Gear (1.55, 1.55,&.24 cu in)
14	1	942272	Gearbox, M7 Bima 1:4
15	1	943060	PTO ASSY, TV60HD CE MARK
16	1	970860	SUPPORT, TV60 GEARBOX
17	1	970864	SHIELD, PTO

943060 - SERVICE PARTS		
PART #	QTY	DESCRIPTION
942294	2	ASSEMBLY, YOKE
942295	2	KIT, CROSS & BEARINGS
942296	1	YOKE, INBOARD (S4) - MALE SIDE
942297	1	YOKE, INBOARD (S5) - FEMALE SIDE

(SERVICE NOTE: PTO ASSY 945007
USED ON S/N 19A14 & BELOW)

2/28/2022

975432	REV: F

OIL COOLER ASSEMBLY

Parts List			
ITEM	QTY	PART #	DESCRIPTION
2	3	110319	NUT, 5/16-18 U-TYPE .75L
7	18	110444	BOLT, 5/16-18 X 0.75, WIZ FLANGE
8	4	110468	BOLT, 1/4-20 X 0.75, WIZ FLANGE
12	18	110606	Nut, 5/16-18, Wiz Flng
14	4	110630	NUT, 1/4-20 LOCK (NYLON INSERT)
40	1	120256	ADAPTER, 12MJ-16MB
43	1	120268	ADAPTER, 12MJ-12FJX-12MJ
47	2	120546	ADAPTER, 20BH-16MB90
49	2	120677	ADAPTER, 20BH-16MB45
50	1	311493	SHROUD - COOLER FAN
54	1	322028	COOLER - HYDRAULIC, TV30
73	1	970839	SUPPORT, REAR COOLER MOUNT
74	1	970840	SUPPORT, FRONT COOLER MOUNT

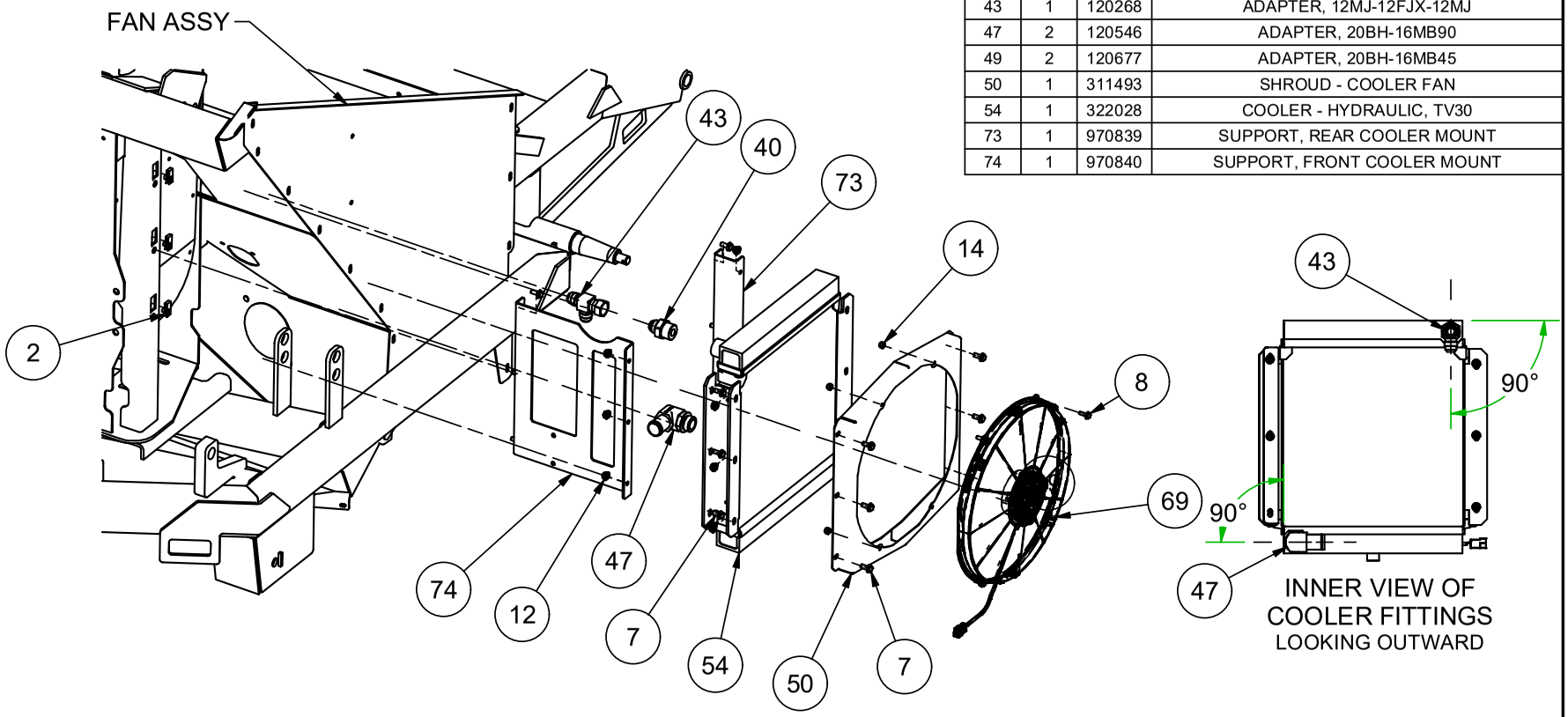

FAN DRIVE HYDRAULICS

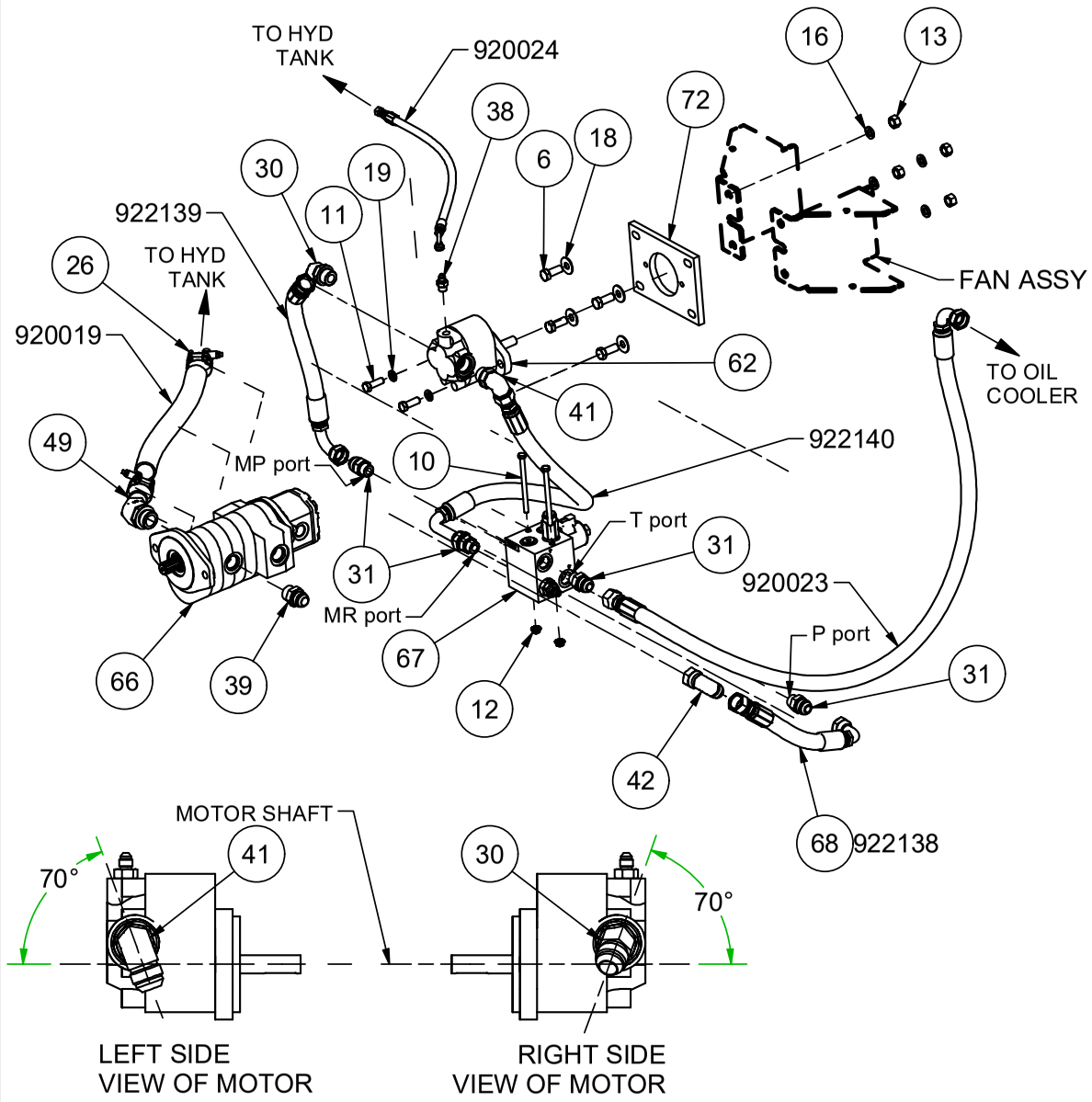

Parts List			
ITEM	QTY	PART #	DESCRIPTION
6	4	110442	BOLT, 1/2-13 X 1.25
10	4	110529	BOLT, 5/16-18 X 4.5
11	2	110539	BOLT, 7/16-14 X 1.25
12	18	110606	Nut, 5/16-18, Wiz Flng
13	8	110610	NUT, 1/2-13
16	8	110666	WASHER, 1/2" LOCK
18	6	110670	WASHER, 7/16" FLAT STANDARD
19	2	110671	WASHER, 7/16" LOCK
26	6	112007	CLAMP, 1.75", T-BOLT
30	1	120031	ADAPTER, 12MJ-12MB45
31	10	120143	ADAPTER, 12MJ-10MB
38	2	120249	ADAPTER, 4MJ-6MB
39	1	120254	ADAPTER, 12MJ-12MB
41	2	120257	ADAPTER, 12MJ-12MB90
42	1	120267	ADAPTER, 12MJ-12FJX90
49	2	120677	ADAPTER, 20BH-16MB45
62	1	923004	MOTOR, 1.76 CI, FAN DRIVE
66	1	923016	Pump, Triple Section Gear (1.55, 1.55,&.24 cu in)
67	2	923017	VALVE, TV60HD CONTROL
68	1	925011	HOSE KIT, TV60R HD
72	1	970291	ADAPTER PLATE

975432	REV: F

DECK DRIVE HYDRAULICS

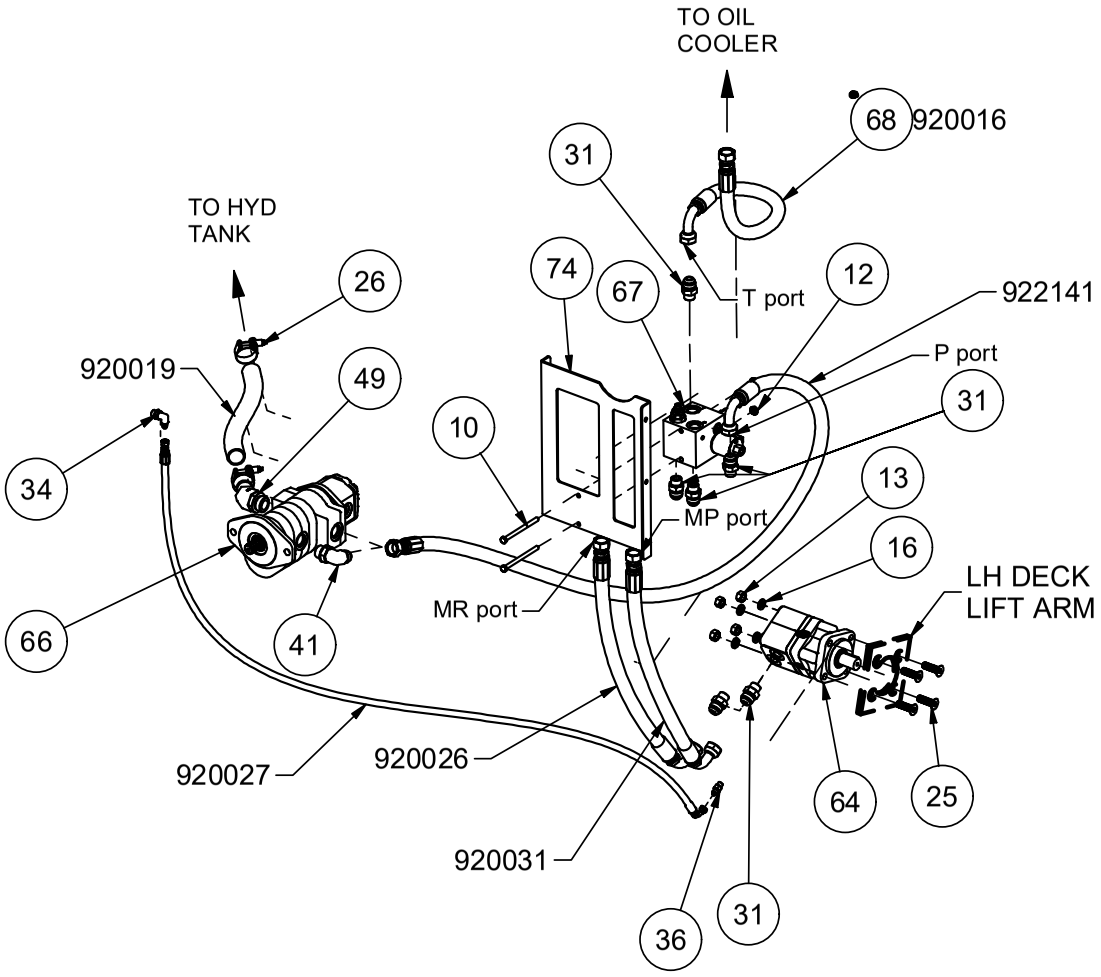

Parts List			
ITEM	QTY	PART #	DESCRIPTION
10	4	110529	BOLT, 5/16-18 X 4.5
12	18	110606	Nut, 5/16-18, Wiz Flng
13	8	110610	NUT, 1/2-13
16	8	110666	WASHER, 1/2" LOCK
25	4	111045	Bolt, 1/2-13 x 1.75 FHCS
26	6	112007	CLAMP, 1.75", T-BOLT
31	10	120143	ADAPTER, 12MJ-10MB
34	1	120220	ADAPTER, 4MJ-6MB90
36	3	120233	ADAPTER, 4MJ-4MB
41	2	120257	ADAPTER, 12MJ-12MB90
49	2	120677	ADAPTER, 20BH-16MB45
64	1	923014	MOTOR, 4.9 CID
66	1	923016	Pump, Triple Section Gear (1.55, 1.55,&.24 cu in)
67	2	923017	VALVE, TV60HD CONTROL
68	1	925011	HOSE KIT, TV60R HD
74	1	970840	SUPPORT, FRONT COOLER MOUNT

Fan & Deck Valve

P/N: 923017

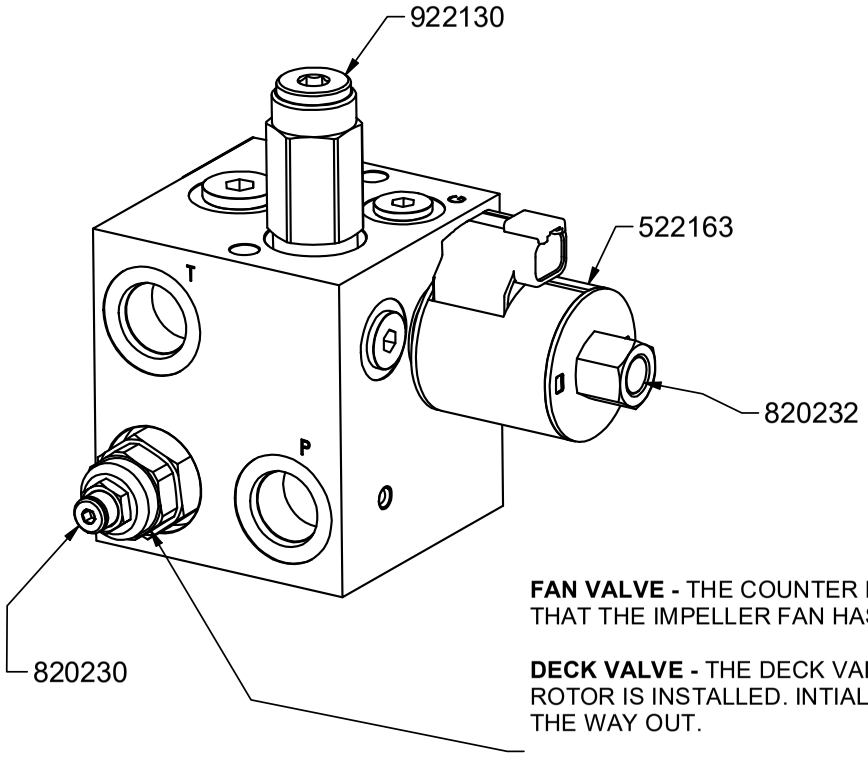

923017 - SERVICE PARTS	
PART #	DESCRIPTION
522163	COIL, #10 HYDRAFORCE
820230	VALVE, COUNTER BALANCE
820232	VALVE, SPOOL
922130	VALVE, RELIEF DIRECT ACTING 2900 PSI

FAN VALVE - THE COUNTER BALANCE VALVE WILL INITIALLY BE SET SO THAT THE IMPELLER FAN HAS APPROXIMATELY A 3-5 SECOND SPINDOWN.

DECK VALVE - THE DECK VALVE WILL NEED TO BE ADJUSTED AFTER THE ROTOR IS INSTALLED. INTIALLY, THE COUNTER BALANCE IS ADJUSTED ALL THE WAY OUT.

ADJUSTING THE COUNTER BALANCE VALVE - THE SPINDOWN FOR THE IMPELLER FAN AND THE DECK ROTOR SHOULD BOTH BE BETWEEN 3-5 SECONDS. FOR ADJUSMENT, LOOSEN THE JAM NUT AND THEN TURN THE SET SCREW ABOUT A 1/4 TURN. FOR A SLOWER SPINDOWN, LOOSEN THE SET SCREW. FOR A QUICKER SPINDOWN, TIGHTEN THE SET SCREW. REPEAT UNTIL THE SPINDOWN IS BETWEEN 3-5 SECONDS, THEN TIGHTEN JAM NUT.

3/1/2022

975432	REV: F

IMPLEMENT VALVE

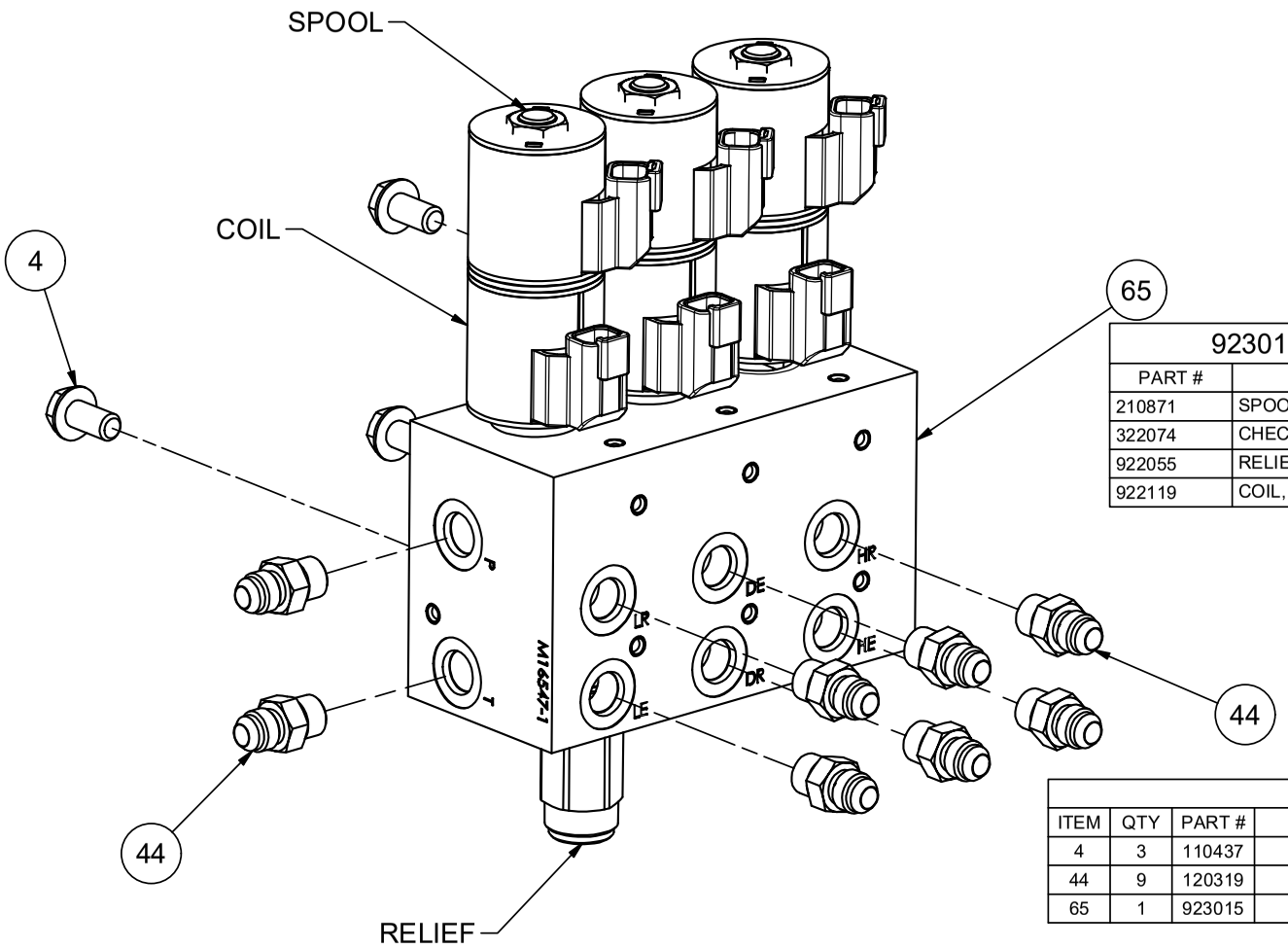

923015 Valve - Service Parts	
PART #	DESCRIPTION
210871	SPOOL, #10, 4W3P TANDEM CENTER
322074	CHECK, #8, PILOT TO OPEN, 25 psi
922055	RELIEF, #8, DIRECT ACTING POPPET, 2000 psi
922119	COIL, #10, DEUTSCH DT04-2P

Parts List			
ITEM	QTY	PART #	DESCRIPTION
4	3	110437	BOLT, 3/8-16 X 0.75, WIZ FLANGE
44	9	120319	ADAPTER, 6MJ-6MB
65	1	923015	MANIFOLD, TV60R HD CYLINDER

975432	REV: F

IMPLEMENT DRIVE HYDRAULICS

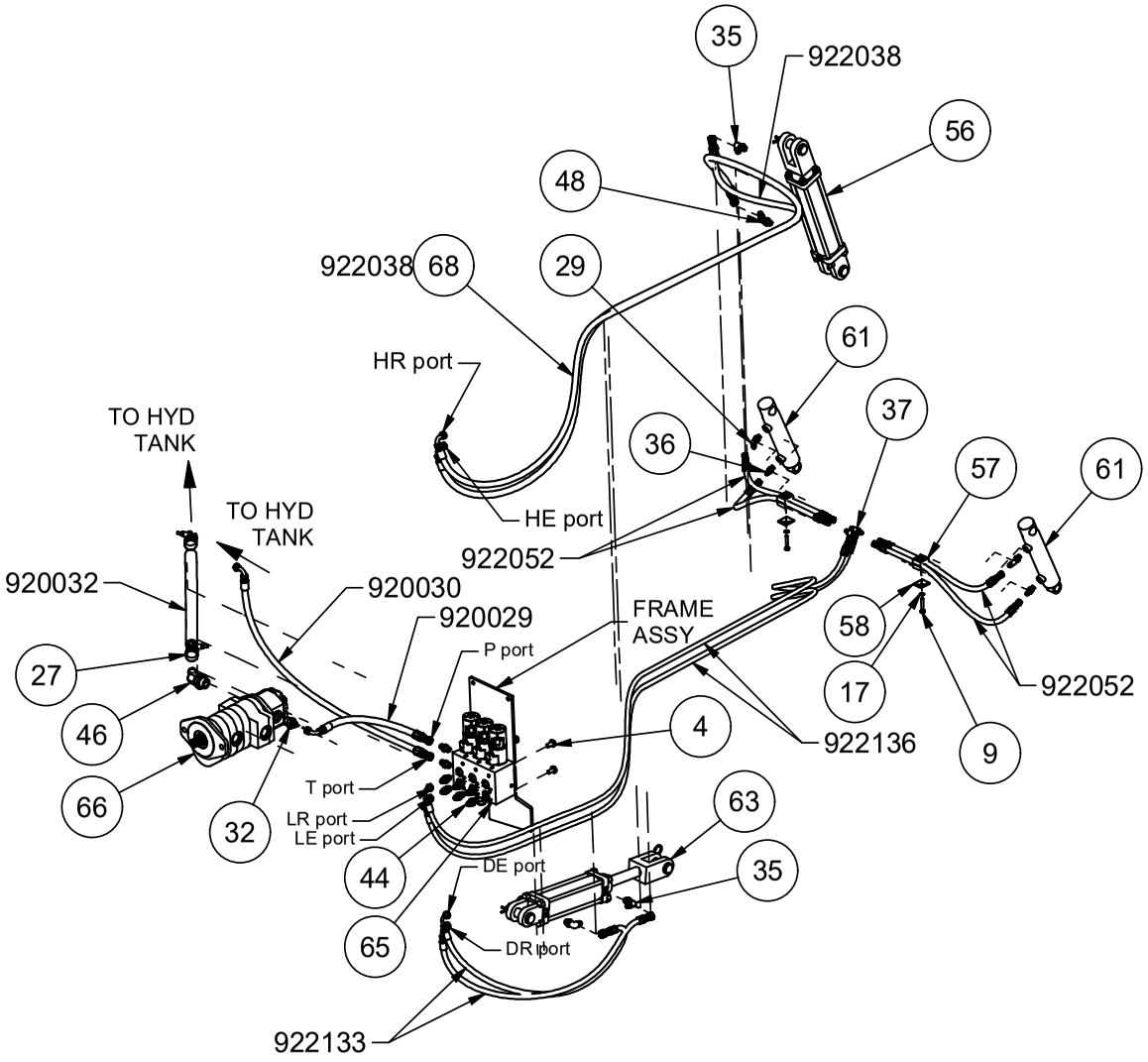

Parts List			
ITEM	QTY	PART #	DESCRIPTION
4	3	110437	BOLT, 3/8-16 X 0.75, WIZ FLANGE
9	2	110474	BOLT, 1/4-20 X 1-1/2
17	2	110667	WASHER, 1/4" LOCK
27	2	112008	CLAMP, 1.25", T-BOLT
29	2	120027	ADAPTER, 4MB-4MJ 45
32	1	120144	ADAPTER, 6MJ-10MB
35	3	120222	ADAPTER, 6MJ-6MB90
36	3	120233	ADAPTER, 4MJ-4MB
37	2	120241	ADAPTER, 4MJ-4MJ-4MJ
44	9	120319	ADAPTER, 6MJ-6MB
46	2	120545	ADAPTER, 12BH-12MB 45°
48	1	120551	ADAPTER, 6MJ-6MB90 R.062
56	1	323019	CYLINDER - 2 X 8, SAE-6
57	2	522104	DOUBLE HOSE CLAMP
58	2	522105	DOUBLE COVERPLATE
61	2	922021	HYDRAULIC CYLINDER
63	1	923011	Cylinder, 2 X 6, -6 SAE Cross
65	1	923015	MANIFOLD, TV60R HD CYLINDER
66	1	923016	Pump, Triple Section Gear (1.55, 1.55,&.24 cu in)
68	1	925011	HOSE KIT, TV60R HD

975192	REV: NC

REMOTE & RECEIVER ASSEMBLY

933003 - TRANSMITTER & RECEIVER			
ITEM	QTY	PART #	DESCRIPTION
1	1	932055	TRANSMITTER, RF, TV60, KAR-TECH
2	1	902158	DECAL, TRANSMITTER OVERLAY
3	1	932056	RECEIVER, TV60, KAR-TECH

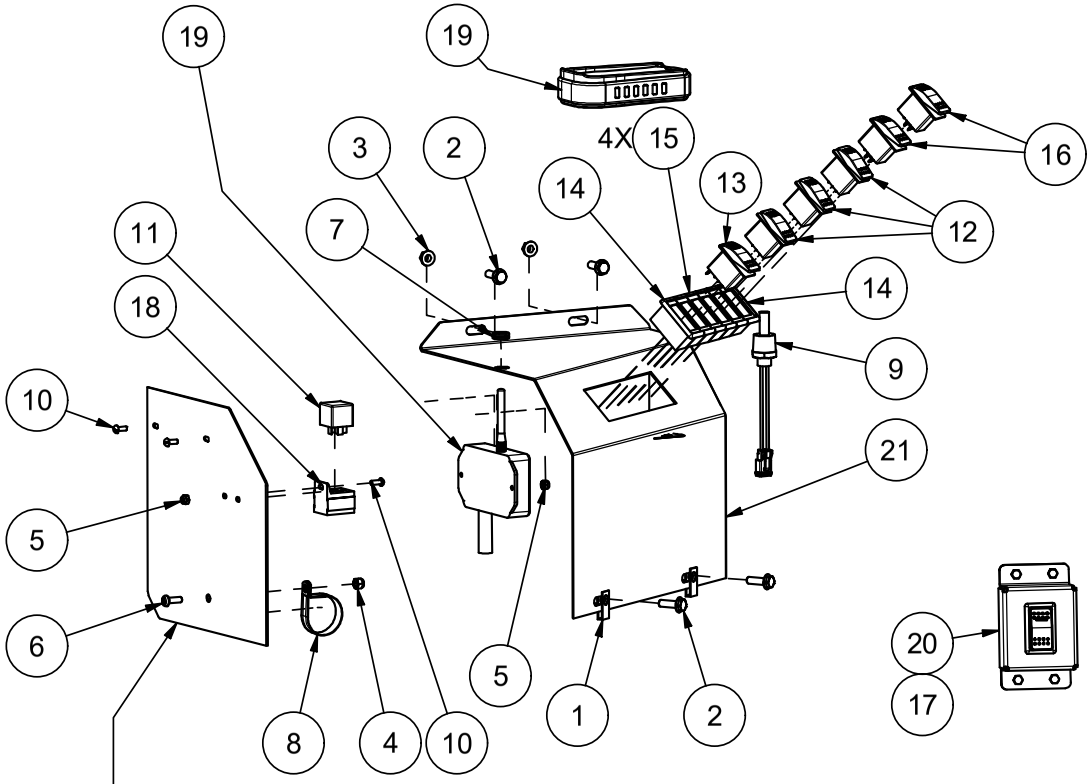

Parts List			
ITEM	QTY	PART #	DESCRIPTION
1	2	110319	NUT, 5/16-18 U-TYPE .75L
2	4	110459	BOLT, 5/16-18 X 1, WIZ FLANGE
3	2	110606	NUT, 5/16-18 WIZ FLANGE
4	1	110630	NUT, 1/4-20 LOCK (NYLON INSERT)
5	3	110631	NUT, 10-24 LOCK NYLON INSERT
6	1	110815	SCREW, 1/4-20 X 3/4 STAINLESS PHILLIPS PAN HEAD
7	1	110967	GROMMET, RUBBER 7/16 ID X 3/4 OD
8	1	130012	CLAMP, ADEL AC28 .265 HOLE
9	1	335001	SWITCH ASSY, 140 F TEMP, NC RISING
10	3	510960	SCREW, 10-24 X 0.5, RHMS
11	1	530111	RELAY
12	3	832004	SWITCH, PADDLE, CARLING (29261)
13	1	832005	SWITCH, PADDLE, CARLING (29253)
14	2	832007	SWITCH MOUNT, END
15	4	832008	SWITCH MOUNT, MIDDLE
16	2	832018	SWITCH, SPDT, ON-ON
17	1	932060	Harness, Vehicle/Remote TV60H
18	1	932078	HARNESS, TV60HD RECEIVER
19	1	933003	TRANSMITTER/RECEIVER, TV60E, KAR-TECH
20	1	935017	KIT, TV40/60H TRACTOR HARNESS
21	1	975438	SHIELD WELDMENT, VALVE

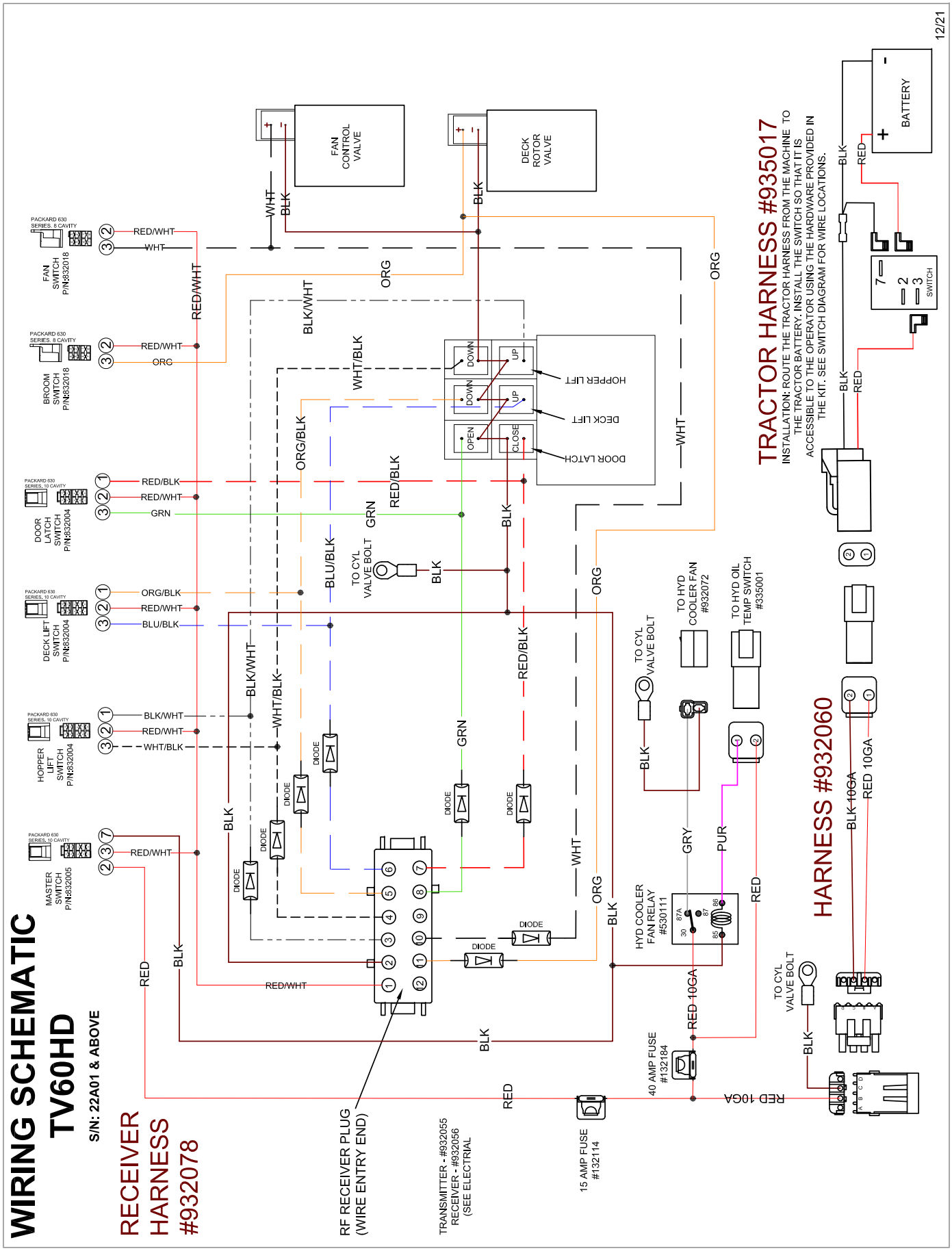
WIRING SCHEMATIC
TV60HD
S/N: 22A01 & ABOVE
RECEIVER HARNESS #932078
RF RECEIVER PLUG (WIRE ENTRY END)
TRANSMITTER - #932055
RECEIVER - #932056
(SEE ELECTRIAL
15 AMP FUSE #132114
40 AMP FUSE #132184
HYD COOLER FAN RELAY #530111
TO CYL VALVE BOLT
TO HYD COOLER FAN #932072
TO HYD OIL TEMP SWITCH #335001
HARNESS #932060
TRACTOR HARNESS #935017
INSTALLATION: ROUTE THE TRACTOR HARNESS FROM THE MACHINE TO THE TRACTOR BATTERY. INSTALL THE SWITCH SO THAT IT IS ACCESSIBLE TO THE OPERATOR USING THE HARDWARE PROVIDED IN THE KIT. SEE SWITCH DIAGRAM FOR WIRE LOCATIONS.
BATTERY
SWITCH
FAN CONTROL VALVE
DECK ROTOR VALVE
HOPPER LIFT
DECK LIFT
DOOR LATCH
DOWN
UP
OPEN
CLOSE
FAN SWITCH P/N:832018
BROOM SWITCH P/N:832018
DOOR LATCH SWITCH P/N:832004
DECK LIFT SWITCH P/N:832004
HOPPER LIFT SWITCH P/N:832004
MASTER SWITCH P/N:832005
PACKARD 630 SERIES, 8 CAVITY
PACKARD 630 SERIES, 10 CAVITY
RED/WHT
WHT
ORG
RED/BLK
GRN
BLU/BLK
BLK/WHT
WHT/BLK
DIODE
RED
BLK
RED 10GA
BLK 10GA
GRY
PUR
12/21

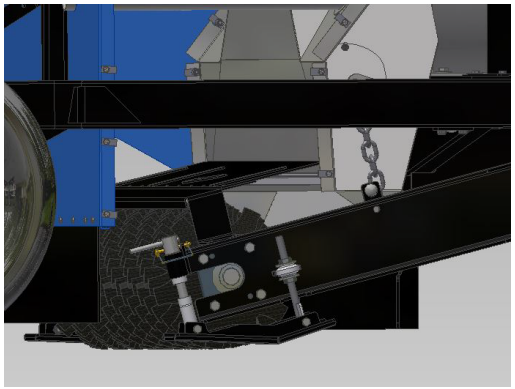

Kit, TV60HD Verticutter

HARPER PART No. 900240

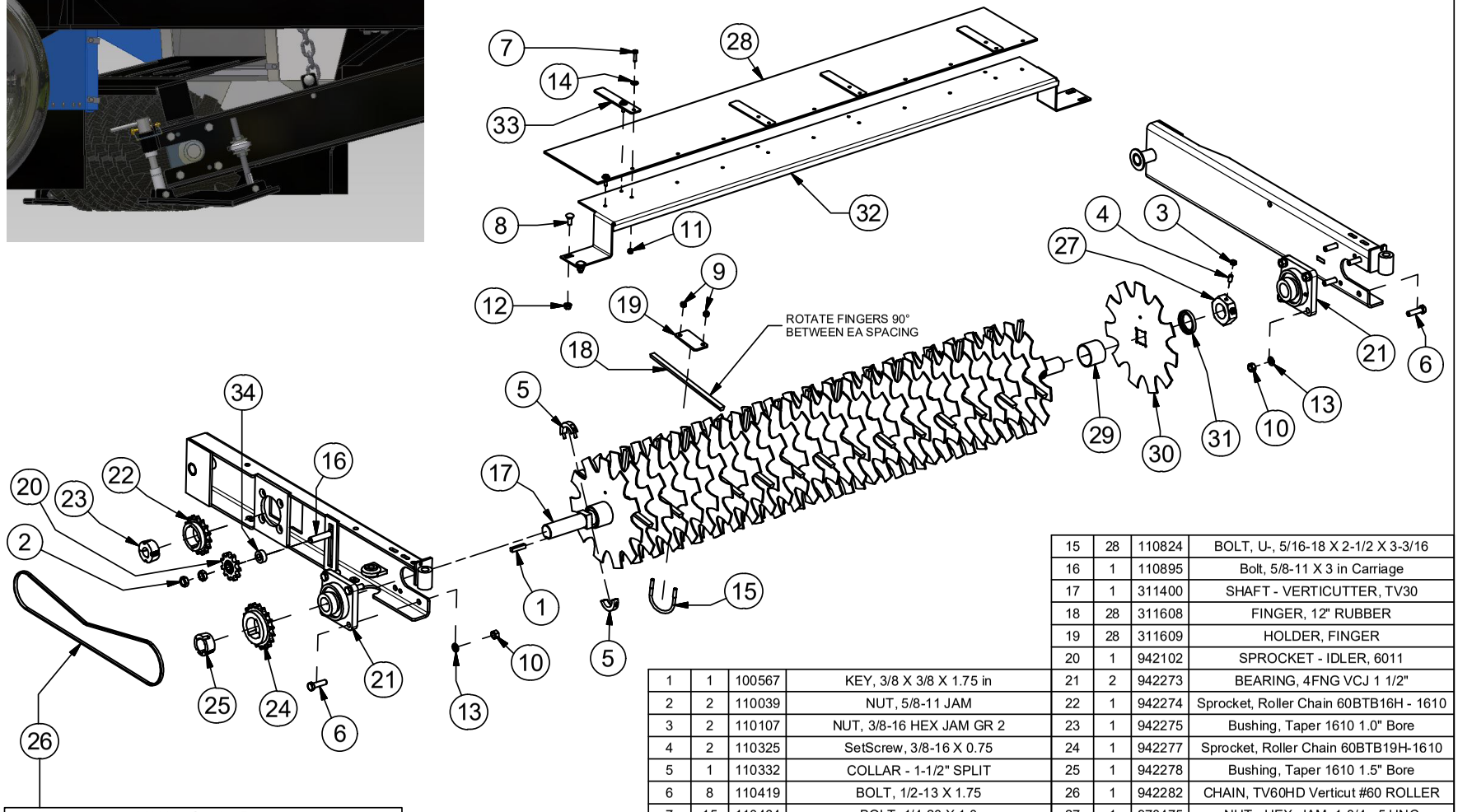

942282 - Service Parts	
PART #	DESCRIPTION
140002	ROLLER CHAIN, #60 (Length=55.75" or 70 Pins)
410441	CONNECTING LINK, HALF-OFFSET #60
410442	CONNECTING LINK, #60 CHAIN

Parts List				Parts List			
ITEM	QTY	PART #	DESCRIPTION	ITEM	QTY	PART #	DESCRIPTION
1	1	100567	KEY, 3/8 X 3/8 X 1.75 in	15	28	110824	BOLT, U-, 5/16-18 X 2-1/2 X 3-3/16
2	2	110039	NUT, 5/8-11 JAM	16	1	110895	Bolt, 5/8-11 X 3 in Carriage
3	2	110107	NUT, 3/8-16 HEX JAM GR 2	17	1	311400	SHAFT - VERTICUTTER, TV30
4	2	110325	SetScrew, 3/8-16 X 0.75	18	28	311608	FINGER, 12" RUBBER
5	1	110332	COLLAR - 1-1/2" SPLIT	19	28	311609	HOLDER, FINGER
6	8	110419	BOLT, 1/2-13 X 1.75	20	1	942102	SPROCKET - IDLER, 6011
7	15	110464	BOLT, 1/4-20 X 1.0	21	2	942273	BEARING, 4FNG VCJ 1 1/2"
8	4	110556	Bolt, 3/8-16 X 1 in Carriage	22	1	942274	Sprocket, Roller Chain 60BTB16H - 1610
9	56	110603	NUT, 5/16-18 LOCK (NYLON)	23	1	942275	Bushing, Taper 1610 1.0" Bore
10	8	110610	NUT, 1/2-13	24	1	942277	Sprocket, Roller Chain 60BTB19H-1610
11	15	110630	NUT, 1/4-20 LOCK (NYLON INSERT)	25	1	942278	Bushing, Taper 1610 1.5" Bore
12	4	110645	NUT, 3/8-16 WIZ FLANGE	26	1	942282	CHAIN, TV60HD Verticut #60 ROLLER
13	8	110666	WASHER, 1/2" LOCK	27	1	970475	NUT - HEX, JAM, 1-3/4 - 5 UNC
14	15	110673	WASHER, 1/4" FLAT STANDARD	28	1	970685	DEBRIS FLAP MAIN
				29	29	970803	SPACER - VERTI CUTTER, 2 IN
				30	29	970804	DISC - DETHATCH, 10 Ga, 11 POINT
				31	1	970805	WASHER - CUP, ROTOR
				32	1	970851	SHIELD, ROTOR DEBRIS
				33	4	970853	SUPPORT, DEBRIS FLAP
				34	1	970862	SPACER, IDLER SPROCKET

9/17/2014

Kit, TV60HD Carbide Tip Verticutter

HARPER PART No: 900255

*CARBIDE TIP BLADE CONVERSION KIT
P/N: 905109 - INCLUDES BLADES & SPACERS
TO CONVERT REGULAR VERTICUTTER KIT

942282 - Service Parts	
PART #	DESCRIPTION
140002	ROLLER CHAIN, #60 (Length=55.75" or 70 Pins)
410441	CONNECTING LINK, HALF-OFFSET #60
410442	CONNECTING LINK, #60 CHAIN

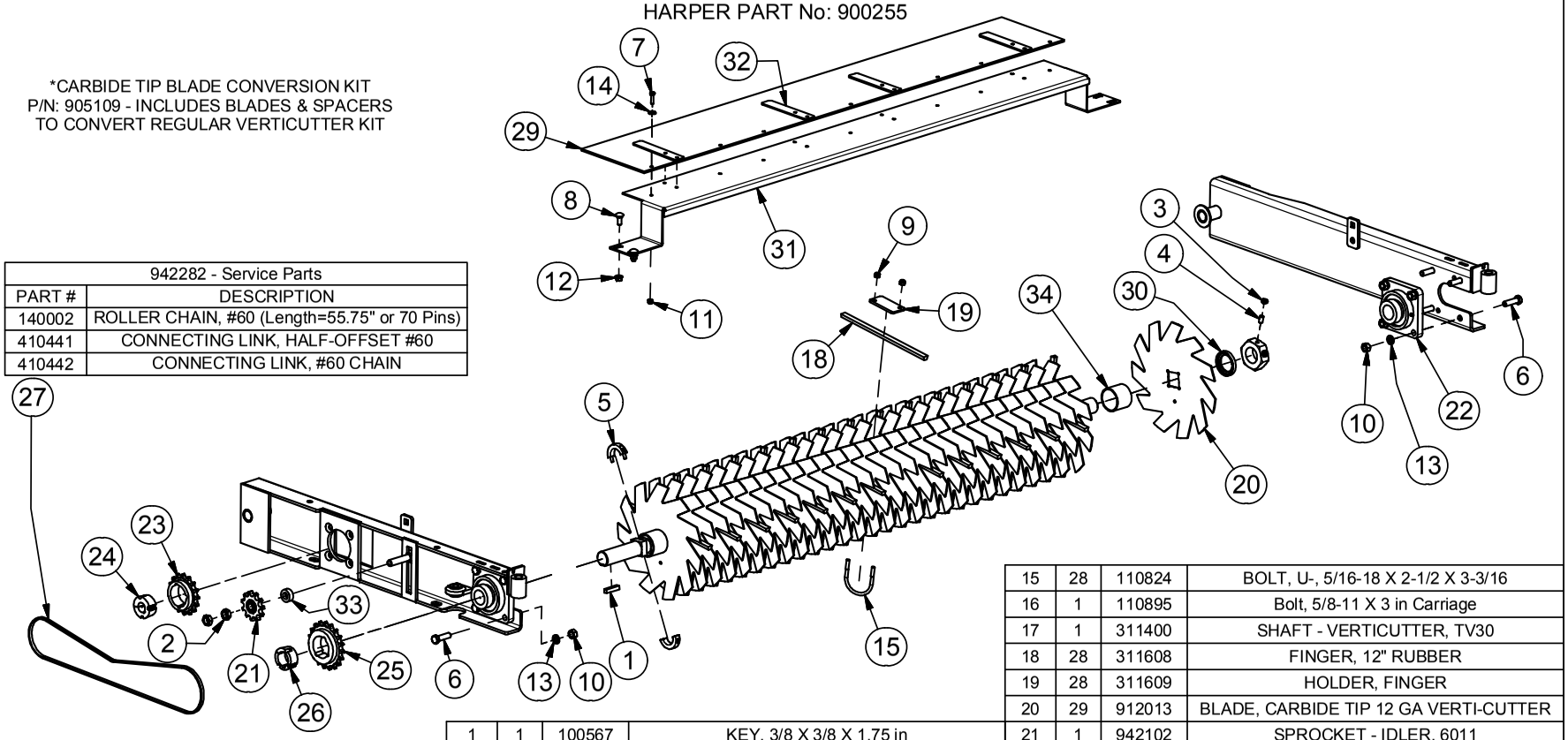

1	1	100567	KEY, 3/8 X 3/8 X 1.75 in
2	2	110039	NUT, 5/8-11 JAM
3	2	110107	NUT, 3/8-16 HEX JAM GR 2
4	2	110325	SetScrew, 3/8-16 X 0.75
5	1	110332	LOCK COLLAR, 1.5" - 2 SCREW
6	8	110419	BOLT, 1/2-13 X 1.75
7	15	110464	BOLT, 1/4-20 X 1.0
8	4	110556	Bolt, 3/8-16 X 1 in Carriage
9	56	110603	NUT, 5/16-18 LOCK (NYLON)
10	8	110610	NUT, 1/2-13
11	15	110630	NUT, 1/4-20 LOCK (NYLON INSERT)
12	4	110645	NUT, 3/8-16 WIZ FLANGE
13	8	110666	WASHER, 1/2" LOCK
14	15	110673	WASHER, 1/4" FLAT STANDARD
ITEM	QTY	PART #	DESCRIPTION

Parts List

15	28	110824	BOLT, U-, 5/16-18 X 2-1/2 X 3-3/16
16	1	110895	Bolt, 5/8-11 X 3 in Carriage
17	1	311400	SHAFT - VERTICUTTER, TV30
18	28	311608	FINGER, 12" RUBBER
19	28	311609	HOLDER, FINGER
20	29	912013	BLADE, CARBIDE TIP 12 GA VERTI-CUTTER
21	1	942102	SPROCKET - IDLER, 6011
22	2	942273	BEARING, 4FNG VCJ 1 1/2"
23	1	942274	Sprocket, Roller Chain 60BTB16H - 1610
24	1	942275	Bushing, Taper 1610 1.0" Bore
25	1	942277	Sprocket, Roller Chain 60BTB19H-1610
26	1	942278	Bushing, Taper 1610 1.5" Bore
27	1	942282	CHAIN, TV60HD Verticut #60 ROLLER
28	1	970475	NUT - HEX, JAM, 1-3/4 - 5 UNC
29	1	970685	DEBRIS FLAP MAIN
30	1	970805	WASHER - CUP, ROTOR
31	1	970851	SHIELD, ROTOR DEBRIS
32	4	970853	SUPPORT, DEBRIS FLAP
33	1	970862	SPACER, IDLER SPROCKET
34	29	970874	SPACER, VERTI-CUTTER, 2 IN 12Ga BLADE
ITEM	QTY	PART #	DESCRIPTION

Parts List

10/3/2016

Kit, TV60HD Rubber Finger Rotor

HARPER PART No. 900242

Parts List			
ITEM	QTY	PART #	DESCRIPTION
1	2	110039	NUT, 5/8-11 JAM
2	4	110535	BOLT, 7/16-14 X 1.5
3	40	110603	NUT, 5/16-18 LOCK (NYLON)
4	4	110641	NUT, 7/16-14
5	4	110671	WASHER, 7/16" LOCK
6	1	110895	Bolt, 5/8-11 X 3 in Carriage
7	80	302042	FINGER - RUBBER
8	20	311403	CLAMP - RUBBER FINGER
9	1	315179	SHAFT - FINGER ROTOR, WELDMENT
10	1	342016	SPROCKET - 50B19 X 1
11	1	510089	Key, 1/4 x 1/4 x 1.25
12	2	942080	BEARING, 1" 2 BOLT FLANGE
13	1	942279	SPROCKET, IDLER #50 x 13T x 5/8ID
14	1	942280	SPROCKET, ROLLER CHAIN 50BS13 X 1"
15	1	942281	CHAIN, ROLLER #50 TV60HD
16	1	970862	SPACER, IDLER SPROCKET

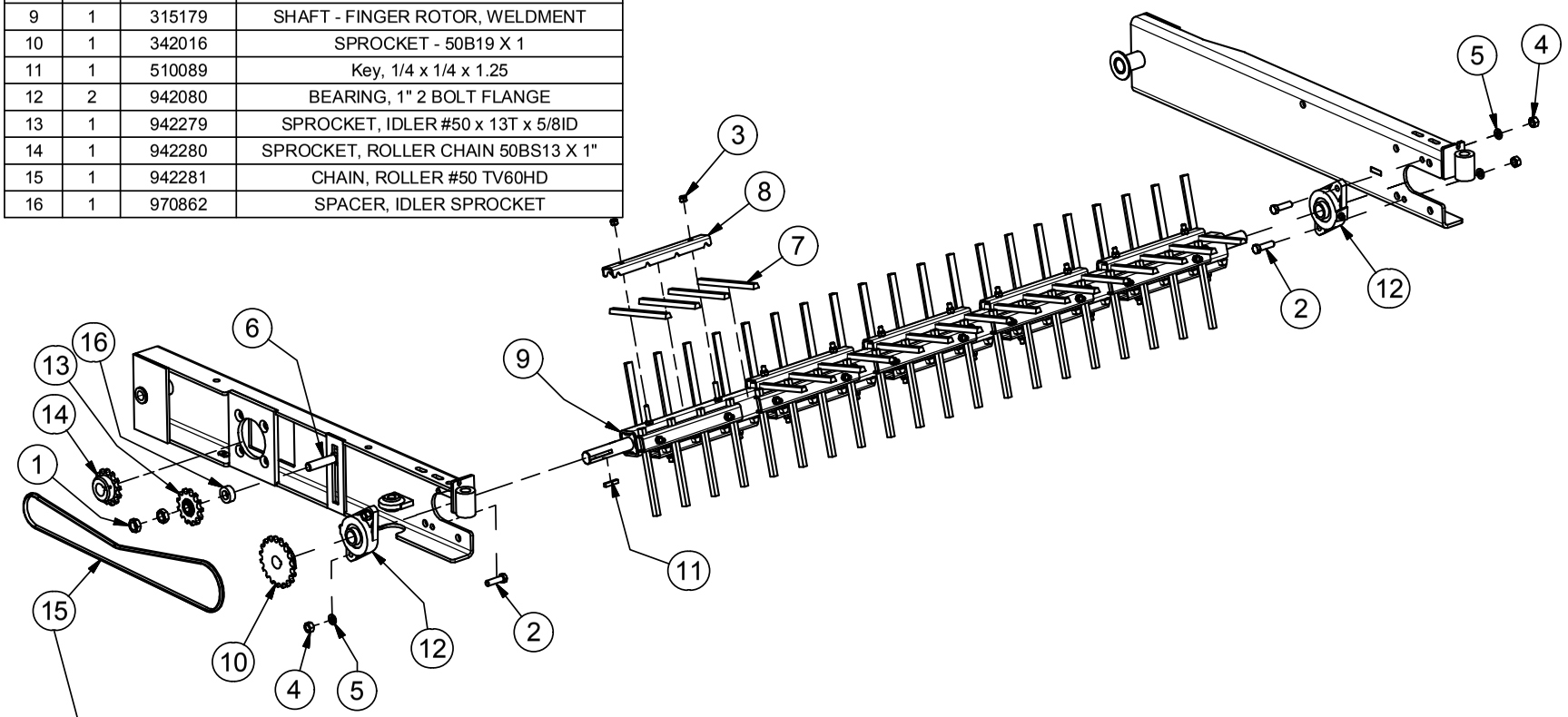

942281 - Service Parts	
PART #	DESCRIPTION
142006	ROLLER CHAIN, #50 (Length-51.219")
140011	CONNECTING LINK, #50 CHAIN

9/17/2014

Parts List			
ITEM	QTY	PART #	DESCRIPTION
1	2	110039	NUT, 5/8-11 JAM
2	4	110535	BOLT, 7/16-14 X 1.5
3	4	110641	NUT, 7/16-14
4	4	110671	WASHER, 7/16" LOCK
5	1	110895	Bolt, 5/8-11 X 3 in Carriage
6	1	305135	ASSY, TV35 FULL BRUSH, SPIRAL WOUND
7	1	342016	SPROCKET - 50B19 X 1
8	1	510089	KEY, 1/4 X 1/4 X 1.25 in
9	2	942080	BEARING, 1" 2 BOLT FLANGE
10	1	942279	SPROCKET, IDLER #50 x 13T x 5/8ID
11	1	942280	SPROCKET, ROLLER CHAIN 50BS13 X 1"
12	1	942281	CHAIN, ROLLER #50 TV60HD
13	1	970862	SPACER, IDLER SPROCKET

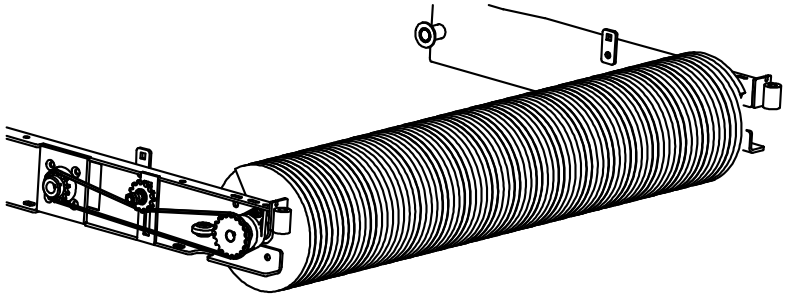

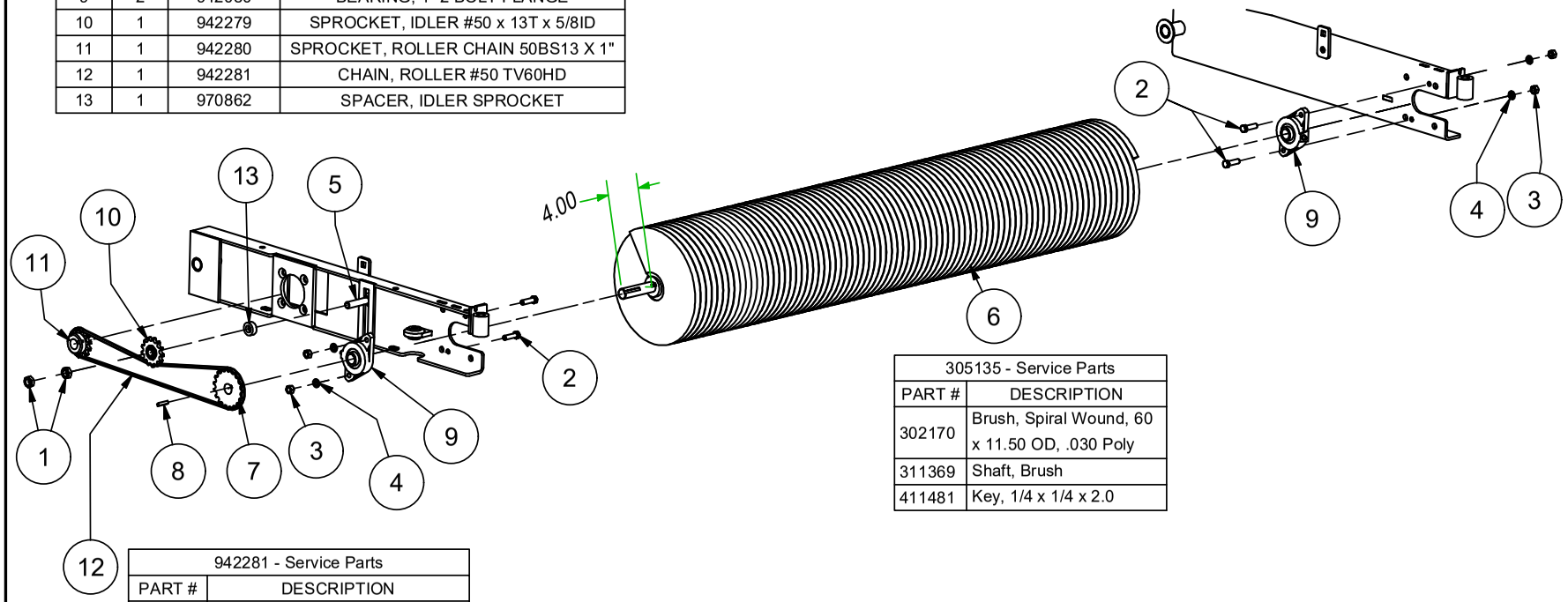

305135 - Service Parts	
PART #	DESCRIPTION
302170	Brush, Spiral Wound, 60 x 11.50 OD, .030 Poly
311369	Shaft, Brush
411481	Key, 1/4 x 1/4 x 2.0

942281 - Service Parts	
PART #	DESCRIPTION
142006	ROLLER CHAIN, #50 - (51.219")
140011	CONNECTING LINK, #50 CHAIN

TV60RHD BROOM KIT

S/N 22A01+

KIT, TV60HD BROOM

HARPER PART No. 900241

STRIP BRUSH INSTALLED ON
21A99 & OLDER

Parts List			
ITEM	QTY	PART #	DESCRIPTION
1	2	110039	NUT, 5/8-11 JAM
2	4	110535	BOLT, 7/16-14 X 1.5
3	2	110618	NUT, 3/8-16 LOCK NYLON INSERT
4	4	110641	NUT, 7/16-14
5	4	110671	WASHER, 7/16" LOCK
6	2	110676	WASHER, 3/8" FLAT STANDARD
7	1	110895	Bolt, 5/8-11 X 3 in Carriage
8	1	302003	BRUSH, 60 in
9	1	311369	SHAFT - BROOM, DECK
10	1	342016	SPROCKET - 50B19 X 1
11	2	510089	KEY, 1/4 X 1/4 X 1.25 in
12	2	942080	BEARING, 1" 2 BOLT FLANGE
13	1	942279	SPROCKET, IDLER #50 x 13T x 5/8ID
14	1	942280	SPROCKET, ROLLER CHAIN 50BS13 X 1"
15	1	942281	CHAIN, ROLLER #50 TV60HD
16	1	970862	SPACER, IDLER SPROCKET
17	3	973002	FLANGE, 2 1/8 X 1, TJ-16

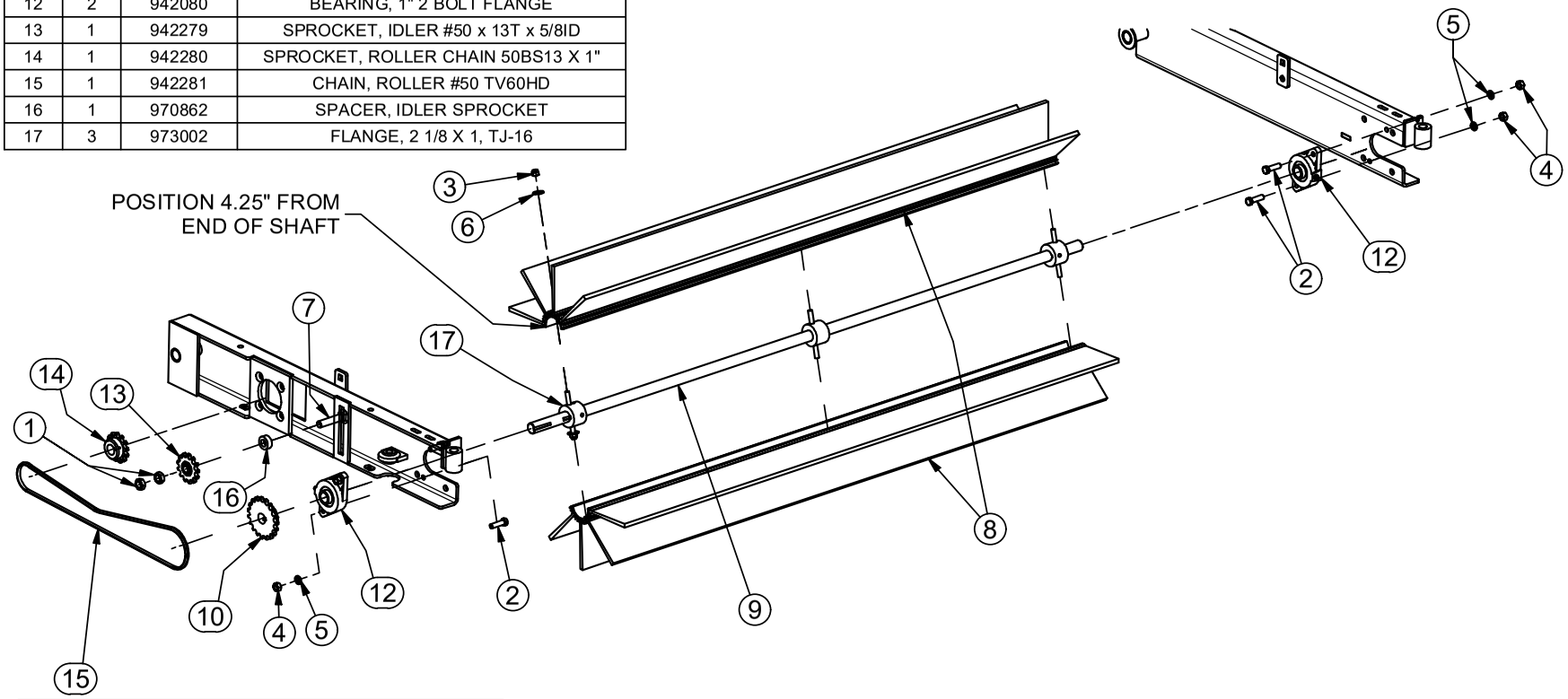

942281 - Service Parts	
PART #	DESCRIPTION
142006	ROLLER CHAIN, #50 (Length=53.125" or 80 Pins)
140011	CONNECTING LINK, #50 CHAIN

NOTES

Harper Industries, Inc.
151 E. Highway 160
Harper, KS 67058

Telephone: 620-896-7381
Toll-Free: 800-835-1042
Fax: 620-896-7129

Website: www.harperindustries.com

E-mail: info@harperindustries.com