# TURBO VAC 35D

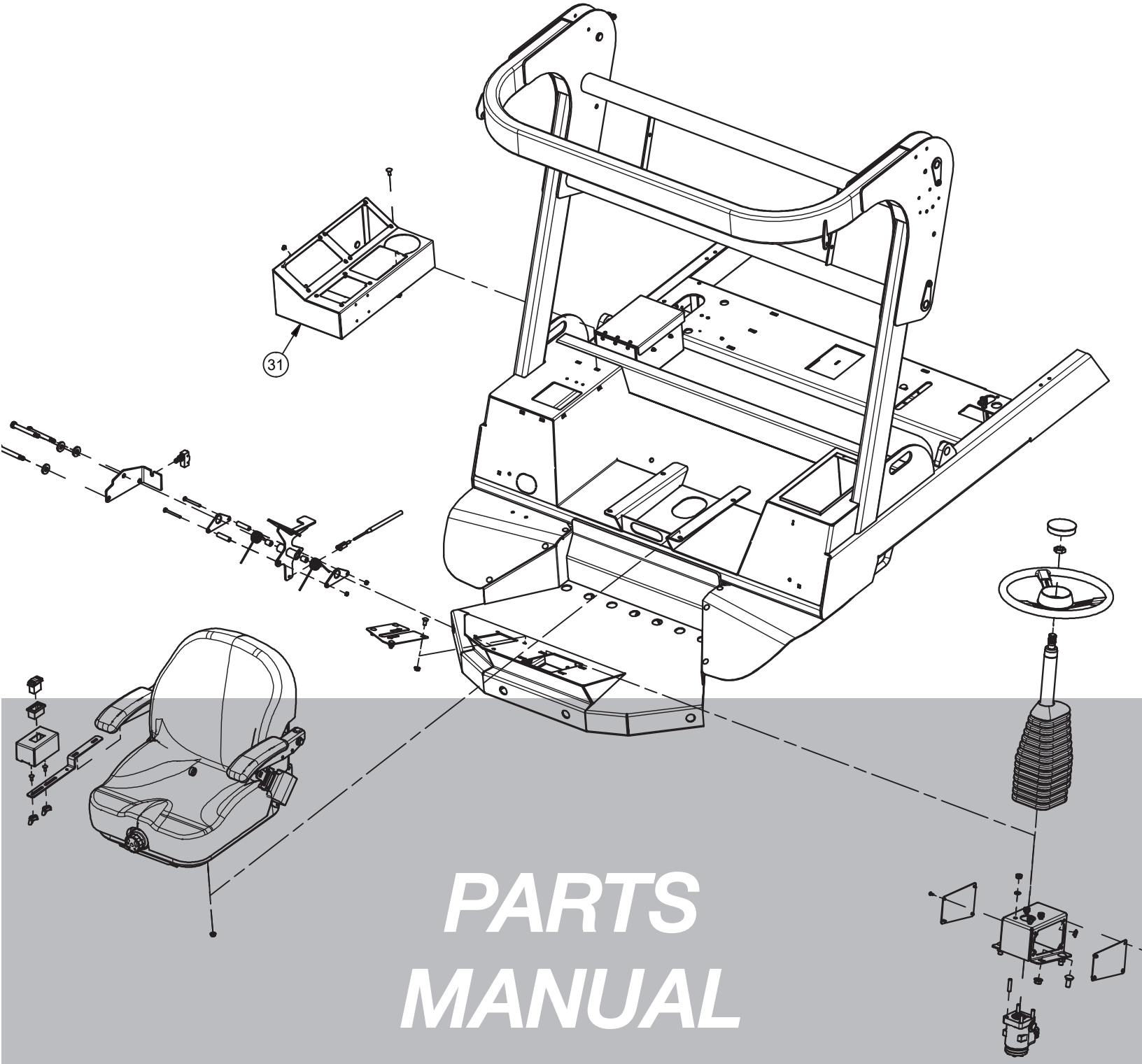


# *PARTS MANUAL*

*6-2020*

*HARPER INDUSTRIES INC*

**Thank you for purchasing a Harper Turf Vac.**

As with all Harper products, the Turf Vac has been developed through tough design and testing procedures to produce a top quality machine. This manual gives assembly, operating, and service information for the model TV35 Turf Vac. Please read and understand all instructional material included with the Turf Vac or its components before assembling and operating the equipment.

A Turf Vac can present hazards to an operator who follows unsafe procedures in either the operation or maintenance of the unit. Therefore, **SAFETY WARNINGS** are presented at certain locations in the text.

THIS SYMBOL: **SAFETY WARNING!**

**MEANING:** Failure to understand and obey this warning may result in injury to you or others. Whenever this symbol is used, please pay very close attention to the information presented, and make sure you fully understand. If you do not, contact your dealer or Harper Industries, Inc. for clarification.

**SAFETY WARNING!**

**ALL SHIELDS AND GUARDS MUST BE IN PLACE FOR PROPER AND SAFE OPERATION OF THIS EQUIPMENT. WHERE THEY ARE SHOWN REMOVED IN THIS MANUAL, IT IS FOR PURPOSES OF ILLUSTRATION AND INSTRUCTION ONLY. DO NOT OPERATE THIS EQUIPMENT UNLESS ALL SHIELDS AND GUARDS ARE IN PLACE.**

Harper Industries, Inc. is continually striving to improve the design and performance of its products. We reserve the right to make changes in specifications and design without thereby incurring any obligation relative to previously manufactured products.

**© 2019 Harper Industries, Inc.**
The Harper name is a registered trademark of Harper Industries, Inc. All other brand and product names are trademarks or registered trademarks of their respective companies.

## LIMITED WARRANTY

Harper Industries, Inc. (HII) warrants to each purchaser of a new Harper Turf Vac from an authorized dealer or representative, that such equipment is free of manufacturer's defects in workmanship and materials which appear while in normal service for a period of ONE YEAR commencing with delivery to the original user.

The obligation of HII under this warranty is expressly limited, at our option, to replacement or repair at a service facility designated by Harper Industries or at the manufacturing plant in Harper, KS. A part will be replaced after inspection discloses it to have been defective. This warranty does not apply to defects caused by damage or unreasonable use (including failure to provide reasonable and necessary maintenance, or by performing functions without genuine Harper Turf Vac accessories) while in the possession of the consumer.

Warranty is limited to parts, labor and ground freight delivery of replacement parts. HII shall not be liable for the consequential damages of any kind, including but not limited to consequential labor costs or transportation charges in connection with replacement or repair of defective parts.

This warranty does not apply to parts subjected to misuse, abuse, alteration, improper or inadequate maintenance, or normal wear (including (belts, chains, filters, knives, brush and broom).

Engines are not covered under this warranty. Refer to manufacturer's warranty for specific warranty information. Harper Industries, its agents or representatives, make or imply no other warranties.

Harper Industries makes no warranty with respect to trade accessories. They are subject to the warranties of their respective manufacturers.

ANY IMPLIED OR STATUTORY WARRANTIES, INCLUDING ANY WARRANTY OR MERCHANTABILITY OR FITNESS FOR A PARTICULAR PURPOSE, ARE EXPRESSLY LIMITED TO THE DURATION OF THIS WRITTEN WARRANTY. HII makes no other express warranty, nor is anyone authorized to make any on behalf of HII.

For further information please contact your nearest Harper Turf Vac dealer.

# RECORDS

Date of Purchase _____ / _____ / _____

Dealer's Name _____

Dealer's Phone _____

Serial Number Machine _____

Serial Number Engine _____

# Table of Contents


**PARTS SECTION**
**Table of Contents**
**Frame and Engine**
- Frame Assembly..... 1.1
- Tank Installation..... 1.2
- Front Axle Installation..... 1.3
- Front Axle Assembly..... 1.4
- Deck Assembly..... 1.5
- Deck Installation..... 1.6
- Diesel Engine Assembly..... 1.7
- Diesel Engine Installation..... 1.8
- Fuel Components..... 1.9
- Fuel Lines..... 1.10
- Operator Station Assembly..... 1.11
- Console Assembly..... 1.12
- Electrical Assembly..... 1.13
- Fan Housing Assembly..... 1.14
- Fan Housing Installation..... 1.15
- Radiator/Oil Cooler Installation..... 1.16
- Hopper and Door Assembly..... 1.17
- Hopper Installation..... 1.18
- Wheel & Shield Installation..... 1.19
- Decals..... 1.20

**Hydraulic**
- Hydraulic Reservoir Assembly..... 2.1
- Propulsion Circuit (Low Range)..... 2.2
- Propulsion Circuit (Hi Range)..... 2.3
- Propulsion System..... 2.4
- Propulsion Pump & Wheel Motor Assemblies.. 2.5
- Propulsion Valve & Loop Flush Valve Assy..... 2.6
- Propulsion Pump Plumbing..... 2.7
- Wheel Motor Plumbing..... 2.8
- Machine System..... 2.9
- Machine Circuits..... 2.10
- Triple Section Pump Assembly..... 2.11
- Triple Section Pump Plumbing..... 2.12
- Deck Plumbing..... 2.13
- Fan Plumbing..... 2.14
- Fan & Deck Valve Assembly..... 2.15
- Steering Plumbing..... 2.16
- Cylinder Control Valve Assy & Plumbing..... 2.17
- Hopper Plumbing..... 2.18
- Cooling Fan Plumbing..... 2.19

**Electrical**
- Wiring Schematic Diagram Overview..... 3.1
- Master Harness..... 3.2
- Relay Harness..... 3.3
- Eng Relay Harness..... 3.4
- Engine Harness/Pos Battery Cable..... 3.5
- Hydraulic Valves Electrical Assembly..... 3.6
- Cooling Package Electrical Assembly..... 3.7

**Options**
- Brush Rotor..... 4.1
- Rubber Finger Rotor..... 4.2
- Verticut w/ Fingers Rotor..... 4.3
- Canopy..... 4.4
- Hopper Dump Extension..... 4.5
- Remote Hose..... 4.6
- Curb Brush..... 4.7
- Light Kit..... 4.8
- Backup Camera Kit..... 4.9

# Frame Assembly

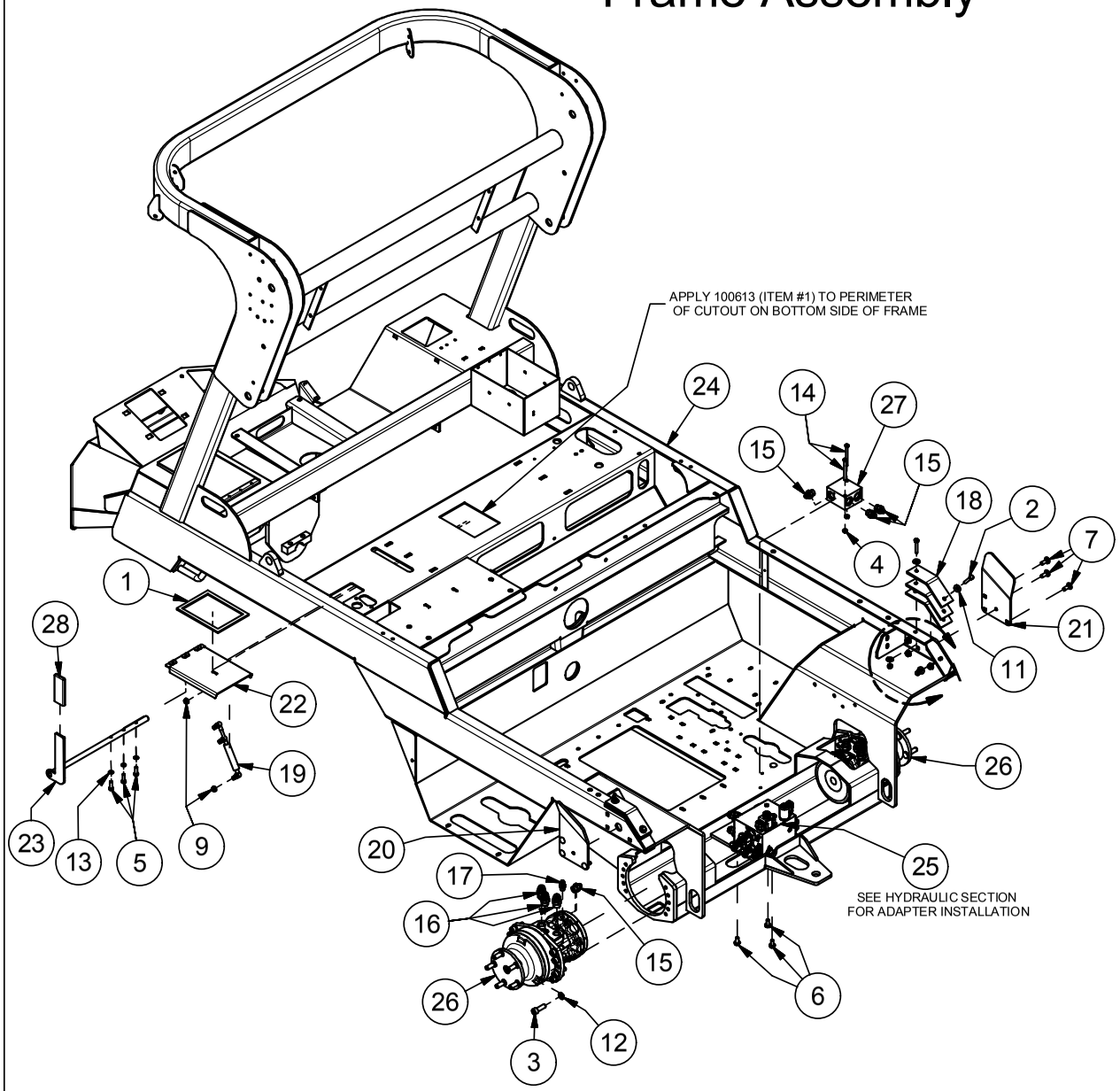


DETAIL A
SCALE 1 /8

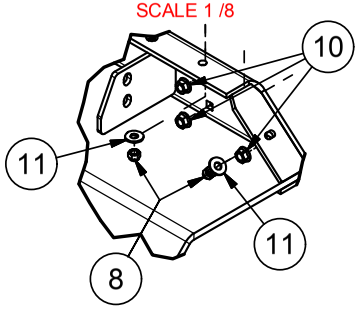


| Parts List | | |
|---|---|---|
| ITEM | PART # | DESCRIPTION |
| 1 | 100613 | SEAL, RUBBER .50 X .187 |
| 2 | 110017 | BOLT, 5/16-18 X 1.75 |
| 3 | 110244 | BOLT, 1/2-13 X 1.5 SHCS |
| 4 | 110290 | NUT, 1/4-20 WIZ FLANGE |
| 5 | 110423 | BOLT, 5/16-18 X 1.0 |
| 6 | 110437 | BOLT, 3/8-16 X 0.75, WIZ FLANGE |
| 7 | 110556 | Bolt, 3/8-16 X 1 in Carriage |
| 8 | 110603 | NUT, 5/16-18 LOCK (NYLON) |
| 9 | 110606 | NUT, 5/16-18 WIZ FLANGE |
| 10 | 110645 | NUT, 3/8-16 WIZ FLANGE |
| 11 | 110665 | WASHER, 5/16" FLAT STANDARD |
| 12 | 110666 | WASHER, 1/2" LOCK |
| 13 | 110674 | WASHER, 5/16" LOCK |
| 14 | 110844 | BOLT, 1/4-20 X 3 |
| 15 | 120239 | ADAPTER, 6MJ-8MB |
| 16 | 120251 | ADAPTER, 10MJ-10MB |
| 17 | 120319 | ADAPTER, 6MJ-6MB |
| 18 | 302019 | PAD - LIFT ARM |
| 19 | 302083 | SPRING, 40LB GAS |
| 20 | 311189 | GUIDE - LINKAGE, HOPPER, LH |
| 21 | 311190 | GUIDE - LINKAGE, HOPPER, RH |
| 22 | 315263 | WELDMENT, CLEANOUT DOOR |
| 23 | 315264 | WELDMENT, CLEANOUT LEVER |
| 24 | 315280 | FRAME WELDMENT, TV30 |
| 25 | 323008 | VALVE, TV30 PROPULSION CONTROL |
| 26 | 323034 | MOTOR, POCLAIN HYD WHEEL |
| 27 | 323053 | VALVE, LOOP FLUSH |
| 28 | 910044 | COVER, VINYL .25 X 1.5 X 4 GRIP |

3/23/2016

# TANK INSTALLATION

| Parts List | | |
|---|---|---|
| ITEM | PART # | DESCRIPTION |
| 1 | 100613 | SEAL, RUBBER .50 X .187 |
| 2 | 110437 | BOLT, 3/8-16 X 0.75, WIZ FLANGE |
| 3 | 110529 | BOLT, 5/16-18 X 4.5 |
| 4 | 110538 | BOLT, 5/16-18 X 3.0 |
| 5 | 110556 | Bolt, 3/8-16 X 1 in Carriage |
| 6 | 110603 | NUT, 5/16-18 LOCK (NYLON) |
| 7 | 110606 | Nut, 5/16-18, Wiz Flng |
| 8 | 110645 | NUT, 3/8-16 WIZ FLANGE |
| 9 | 110824 | BOLT, U-, 5/16-18 X 2-1/2 X 3-3/16 |
| 10 | 112053 | SCREW, 10-32 X 1/2 MACH SEAL |
| 11 | 120082 | PLUG, 6MP HEX HEAD |
| 12 | 120378 | ADAPTER, 5HB-6FBX |
| 13 | 120384 | ADAPTER, 5BH-4MP90 |
| 14 | 311909 | BRKT, INTAKE TUBE SUPPORT |
| 15 | 315278 | Hydraulic Tank, T4F |
| 16 | 315305 | Fuel Tank, TV35 T4F |
| 17 | 323045 | VALVE, COOLING FAN MANIFOLD |
| 18 | 332057 | FUEL LEVEL SENDER |
| 19 | 500172 | GASKET, FUEL SENDER |
| 20 | 500209 | FITTING, REDUCER 3/8 X 1/4 NPT |
| 21 | 802023 | VALVE, FUEL SHUT OFF 6MB-4MP |
| 22 | 820158 | DECK VALVE |

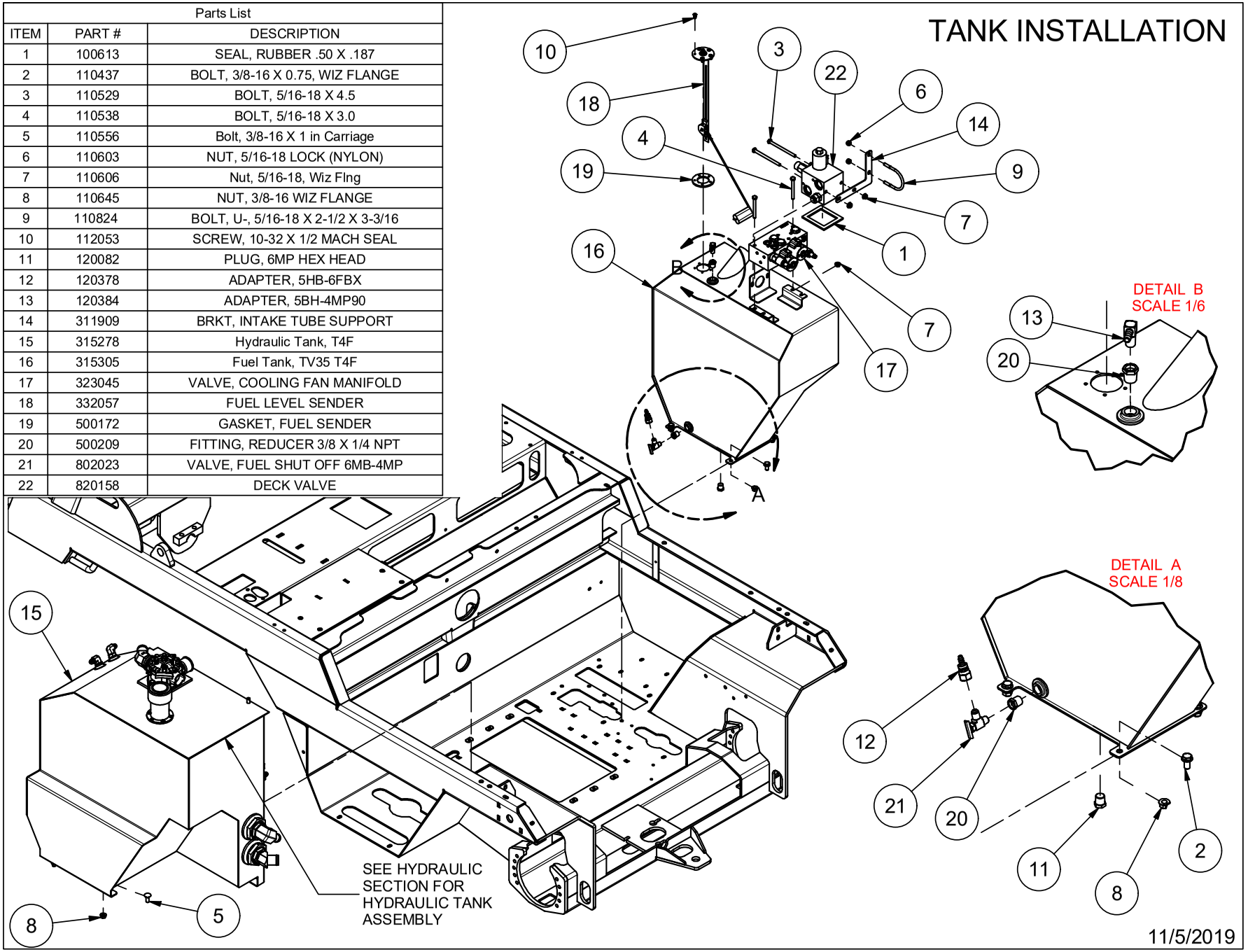


11/5/2019

# Front Axle Assembly

| 342004 Service Parts | | | |
|---|---|---|---|
| ITEM | QTY | PART # | DESCRIPTION |
| A | 1 | 312001 | GREASE CAP |
| B | 1 | 312002 | GREASE SEAL |
| C | 5 | 312003 | STUD - WHEEL, 1/2-20 NF |
| D | 1 | 312004 | HUB - 5 ON 4.5, 1750 LBS |
| E | 1 | 312005 | OUTER RACE |
| F | 1 | 312006 | OUTER BEARING |
| G | 1 | 312007 | INNER RACE |
| H | 1 | 312008 | INNER BEARING |

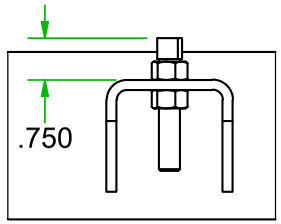


STEERING STOP SETTING

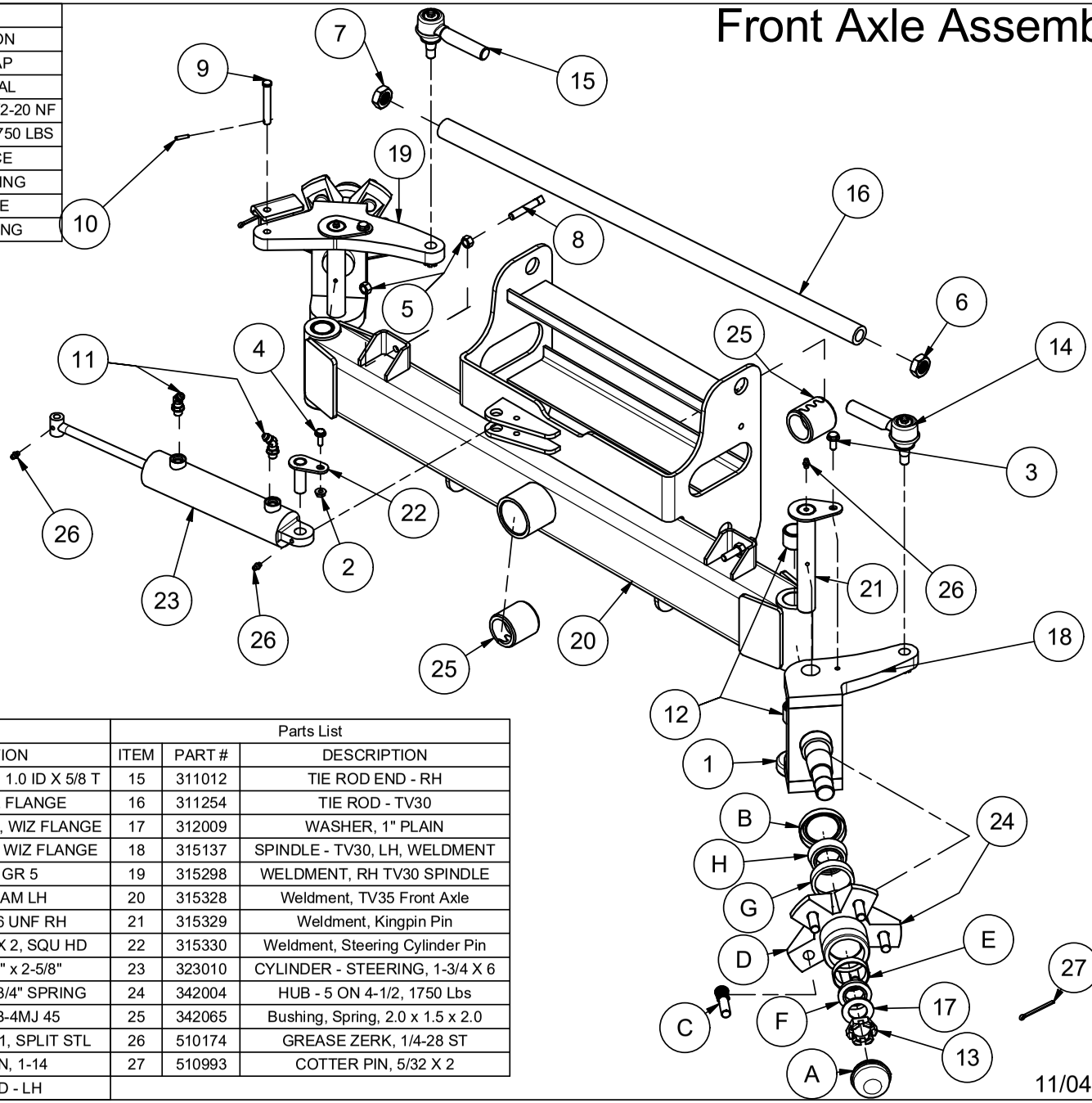


| Parts List | | | Parts List | | |
|---|---|---|---|---|---|
| ITEM | PART # | DESCRIPTION | ITEM | PART # | DESCRIPTION |
| 1 | 102043 | BEARING - THRUST, 1.0 ID X 5/8 T | 15 | 311012 | TIE ROD END - RH |
| 2 | 110290 | NUT, 1/4-20 WIZ FLANGE | 16 | 311254 | TIE ROD - TV30 |
| 3 | 110444 | BOLT, 5/16-18 X 0.75, WIZ FLANGE | 17 | 312009 | WASHER, 1" PLAIN |
| 4 | 110468 | BOLT, 1/4-20 X 0.75, WIZ FLANGE | 18 | 315137 | SPINDLE - TV30, LH, WELDMENT |
| 5 | 110826 | NUT, 3/8-16 GR 5 | 19 | 315298 | WELDMENT, RH TV30 SPINDLE |
| 6 | 110891 | NUT, 3/4-16 JAM LH | 20 | 315328 | Weldment, TV35 Front Axle |
| 7 | 110892 | NUT, JAM 3/4-16 UNF RH | 21 | 315329 | Weldment, Kingpin Pin |
| 8 | 110921 | SET SCREW - 3/8 X 2, SQU HD | 22 | 315330 | Weldment, Steering Cylinder Pin |
| 9 | 112110 | CLEVIS PIN, 3/8" x 2-5/8" | 23 | 323010 | CYLINDER - STEERING, 1-3/4 X 6 |
| 10 | 112111 | ROLL PIN, 5/32" x 3/4" SPRING | 24 | 342004 | HUB - 5 ON 4-1/2, 1750 Lbs |
| 11 | 120027 | ADAPTER, 4MB-4MJ 45 | 25 | 342065 | Bushing, Spring, 2.0 x 1.5 x 2.0 |
| 12 | 200082 | BUSHING, 1.25X1X1, SPLIT STL | 26 | 510174 | GREASE ZERK, 1/4-28 ST |
| 13 | 310261 | NUT - CROWN, 1-14 | 27 | 510993 | COTTER PIN, 5/32 X 2 |
| 14 | 311011 | TIE ROD END - LH | | | |

11/04/2019

# Front Axle Installation

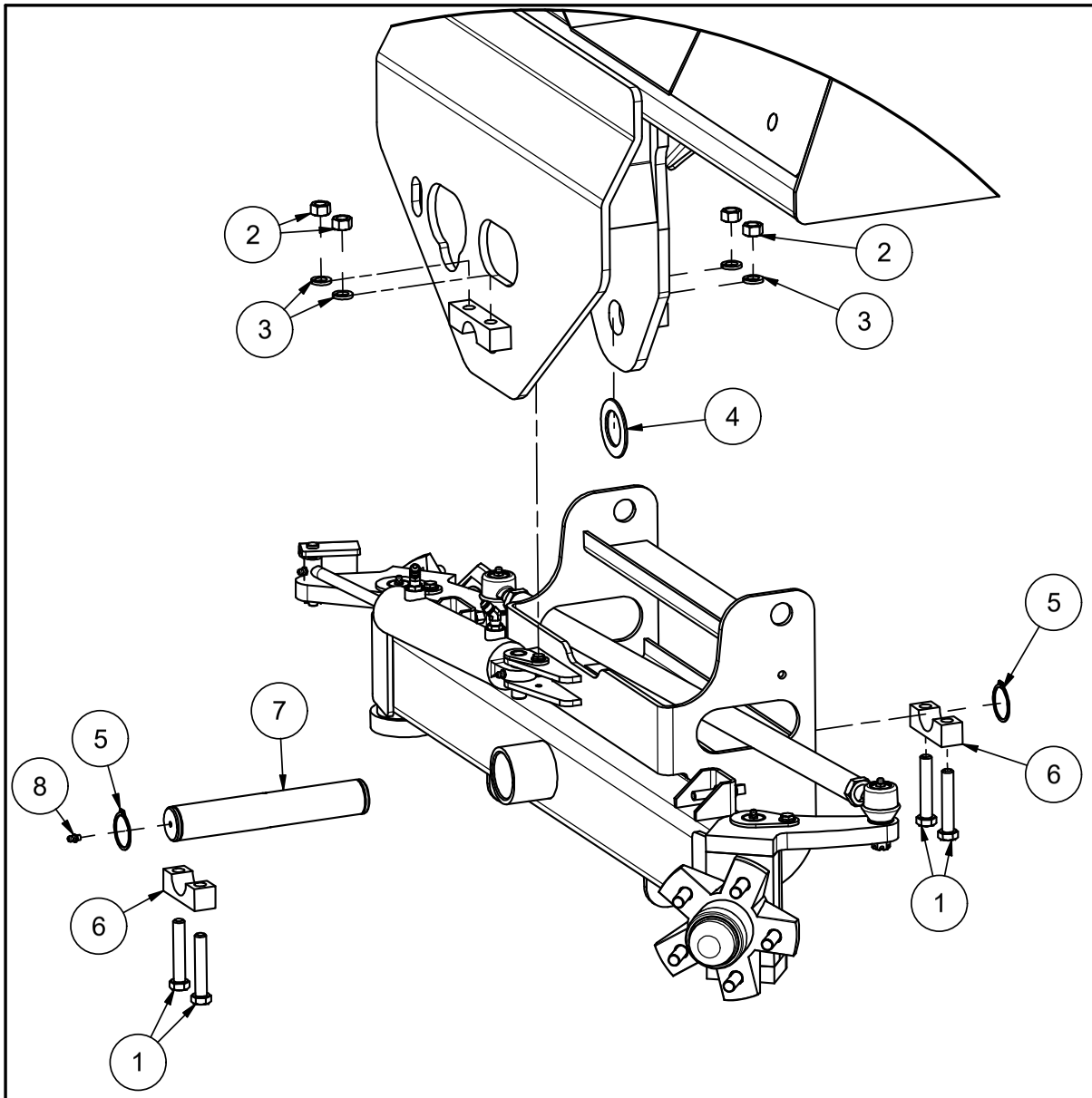


| Parts List | | | |
|---|---|---|---|
| ITEM | QTY | PART # | DESCRIPTION |
| 1 | 4 | 110129 | BOLT, 1/2-13 X 2.75 HEX |
| 2 | 4 | 110610 | NUT, 1/2-13 |
| 3 | 4 | 110666 | WASHER, 1/2" LOCK |
| 4 | 1 | 110862 | WASHER - THRUST, IGUS MTI-24 |
| 5 | 2 | 110888 | SNAP RING - EXT, 1-1/2 |
| 6 | 2 | 311459 | KEEPER - AXLE PIVOT, LOWER |
| 7 | 1 | 311462 | PIN - FRONT AXLE, TV30 |
| 8 | 5 | 510174 | GREASE ZERK, 1/4-28 ST |

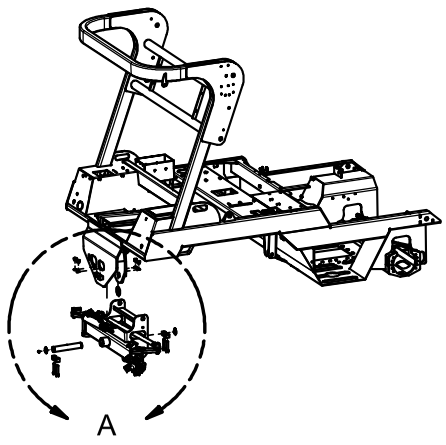


11/5/2019

# Deck Assembly

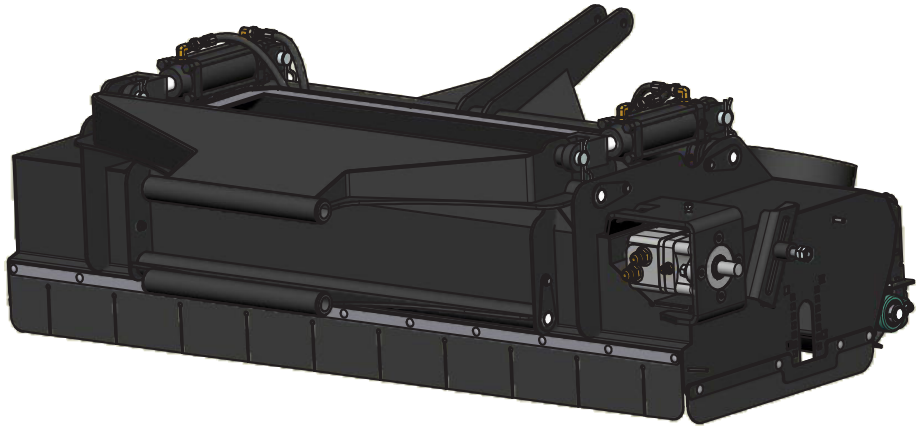

| ITEM | PART # | DESCRIPTION |
|---|---|---|
| 1 | 100365 | MOLDING - EDGE GUARD, 5/32 |
| 2 | 110020 | Bolt, 5/16-18 X 0.75 in Carriage |
| 3 | 110039 | NUT, 5/8-11 JAM |
| 4 | 110154 | Bolt, 1/4-20 X 0.75 in Carriage |
| 5 | 110290 | NUT, 1/4-20 WIZ FLANGE |
| 6 | 110358 | Bolt, 1/4-20 X 0.625 in Carriage |
| 7 | 110444 | BOLT, 5/16-18 X 0.75, WIZ FLANGE |
| 8 | 110474 | BOLT, 1/4-20 X 1-1/2 |
| 9 | 110581 | BOLT, 3/8-16 X 4.5 TAP |
| 10 | 110606 | NUT, 5/16-18 WIZ FLANGE |
| 11 | 110610 | NUT, 1/2-13 |
| 12 | 110666 | WASHER, 1/2" LOCK |
| 13 | 110667 | WASHER, 1/4" LOCK |
| 14 | 110672 | WASHER, 3/8" LOCK |
| 15 | 110826 | NUT, 3/8-16 GR 5 |
| 16 | 110895 | Bolt, 5/8-11 X 3 in Carriage |
| 17 | 110916 | Bolt, 3/8-16 X 1.5 in Carriage |
| 18 | 111045 | Bolt, 1/2-13 x 1.75 FHCS |
| 19 | 120251 | ADAPTER, 10MJ-10MB |
| 20 | 120665 | ADAPTER, 6MJ-4MB |
| 21 | 302018 | SKIRT - DECK, RUBBER, FRONT |
| 22 | 302049 | SCRAPER, DECK ROLLER RUBBER |
| 23 | 302084 | SKIRT, DECK SIDE |
| 24 | 311370 | SPACER - IDLER |
| 25 | 311382 | BAFFLE - DECK, RETURN AIR |
| 26 | 311383 | RETAINER - DECK SKIRT, FRONT |
| 27 | 311389 | BRACKET - ROLLER ADJUSTMENT, DECK |
| 28 | 311391 | BRACKET - ROLLER ADJUSTMENT, BEARING |
| 29 | 311528 | RETAINER, DECK ROLLER SCRAPER |
| 30 | 311741 | RETAINER, DECK SKIRT |
| 31 | 315108 | LINKAGE - DECK MOUNT, UPPER, WELDMENT |
| 32 | 315112 | LIFT - DECK, REAR, WELDMENT |
| 33 | 315160 | PIN - DECK, LOWER, WELDMENT |
| 34 | 315161 | PIN - DECK, WELDMENT |
| 35 | 315193 | LINKAGE - DECK MOUNT, LOWER, WELDMENT |
| 36 | 315197 | ROLLER - TV30 DECK, WELDMENT |
| 37 | 315258 | WELDMENT, ROLLER SCRAPER |
| 38 | 315271 | WELDMENT, TV30 DECK |
| 39 | 320251 | HOSE - DECK, LEFT FRONT |
| 40 | 320253 | HOSE - DECK, RIGHT FRONT |
| 41 | 320266 | HOSE - DECK, LEFT REAR |
| 42 | 320267 | HOSE DECK, RIGHT REAR |
| 43 | 323018 | CYLINDER - 2 x 4, SAE-6, TIE ROD |
| 44 | 342008 | BEARING - 1", 2 - BOLT FLNG, MED DUTY |
| ITEM | PART # | DESCRIPTION |
| Parts List | | |

| ITEM | PART # | DESCRIPTION |
|---|---|---|
| 45 | 500231 | GREASE ZERK, 1/4-28 45deg |
| 46 | 522104 | DOUBLE HOSE CLAMP |
| 47 | 522105 | DOUBLE COVERPLATE |
| 48 | 800124 | BUSHING, MFI-1620-24 |
| 49 | 923014 | MOTOR, 4.9 CID |
| ITEM | PART # | DESCRIPTION |
| Parts List | | |

# Deck Assembly

7/13/2016

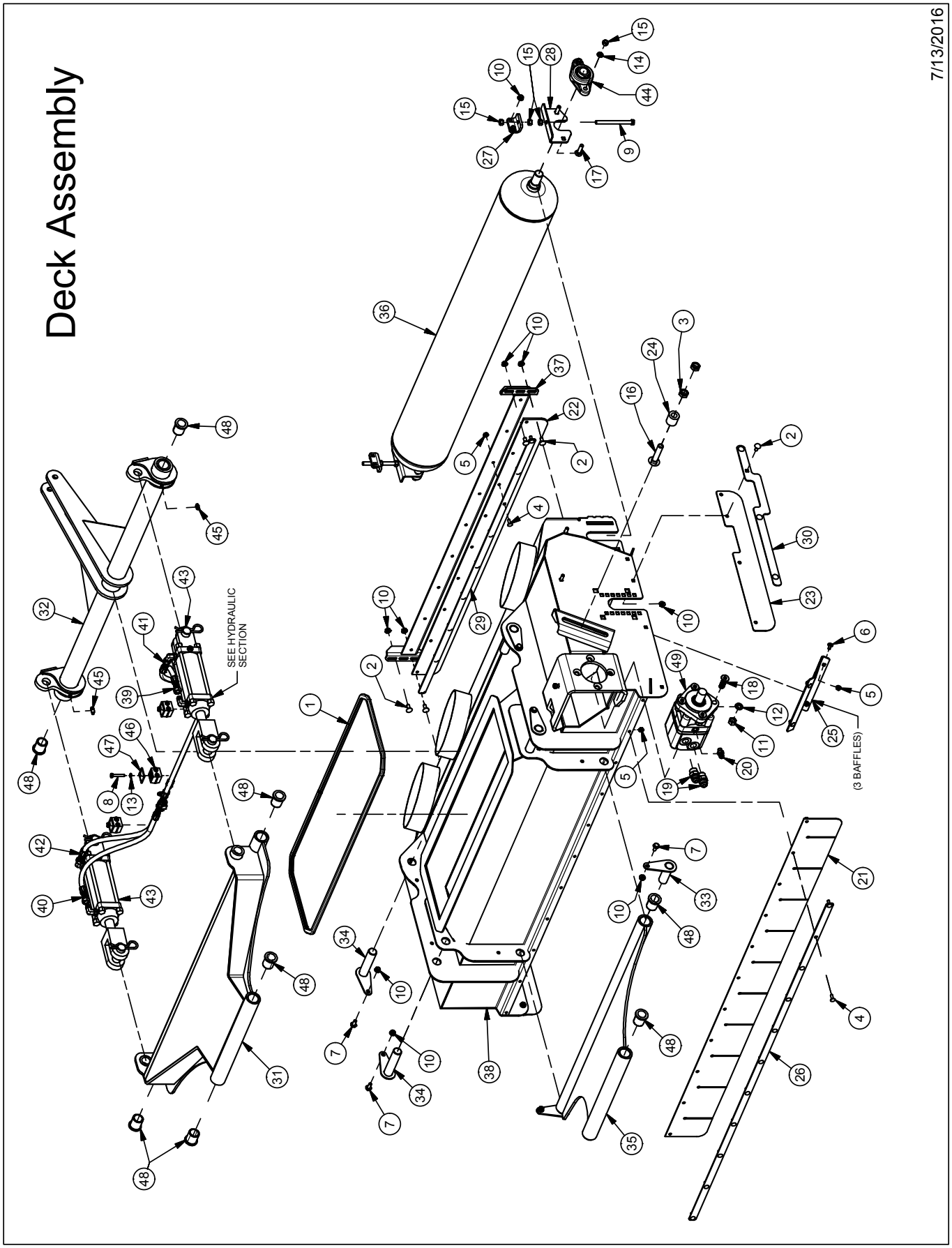

# Deck Installation

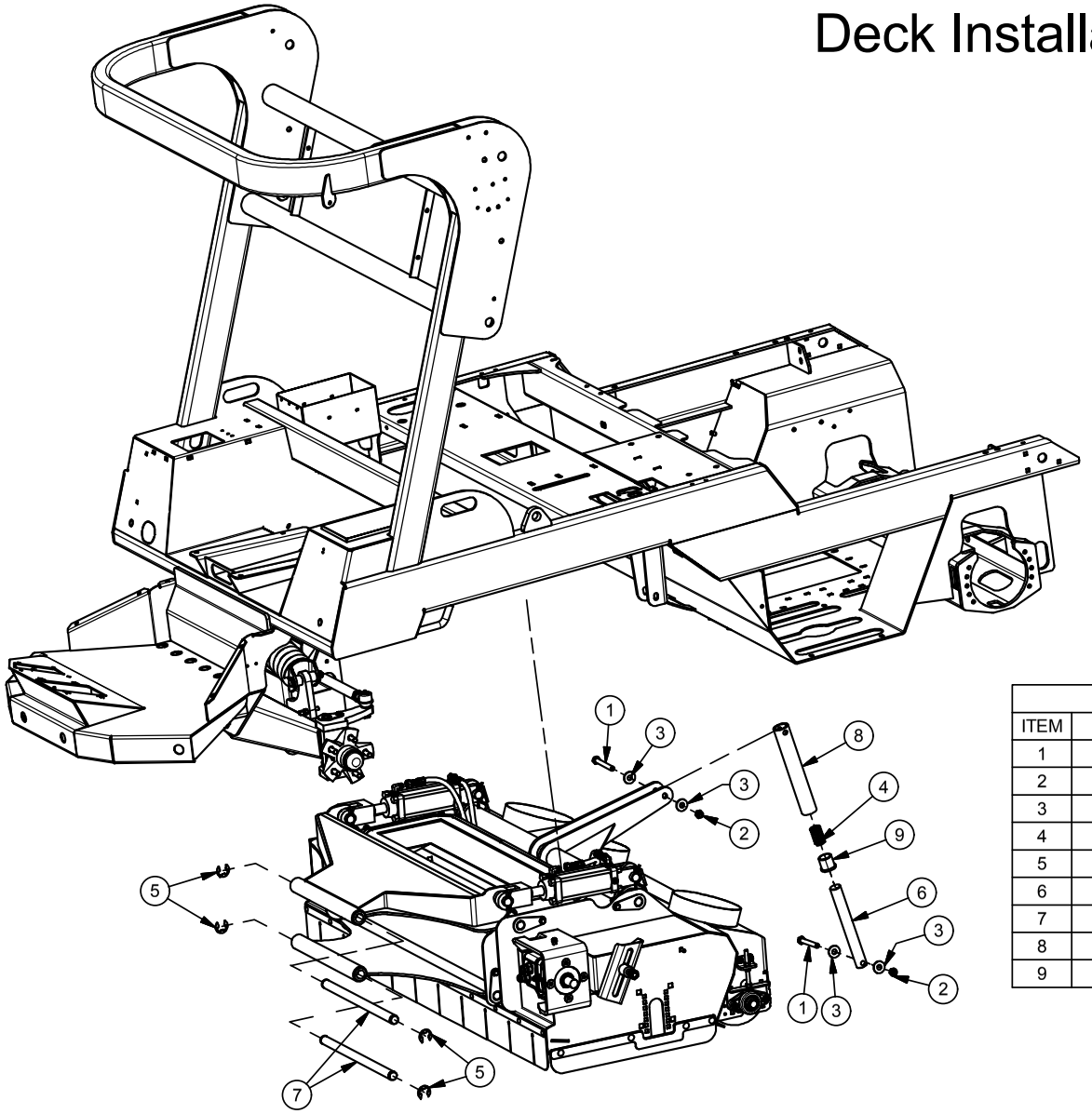


| Parts List | | |
|---|---|---|
| ITEM | PART # | DESCRIPTION |
| 1 | 110003 | BOLT, 1/2-13 X 4.0 |
| 2 | 110615 | NUT, 1/2-13, UNITORQUE LOCK |
| 3 | 110658 | WASHER, 1/2" FLAT STANDARD |
| 4 | 110861 | SPRING - COMPRESSION, 1-3/16 OD X 2. L, K 800 |
| 5 | 110913 | RETAINING RING, 1" EXT E |
| 6 | 311133 | ROD - LIFT LINK |
| 7 | 311679 | PIN, DECK MOUNT |
| 8 | 315113 | TUBE - LIFT LINK, WELDMENT |
| 9 | 800129 | BUSHING, IGUS MFI-2024-24 |

7/14/2016

# DIESEL ENGINE ASSEMBLY

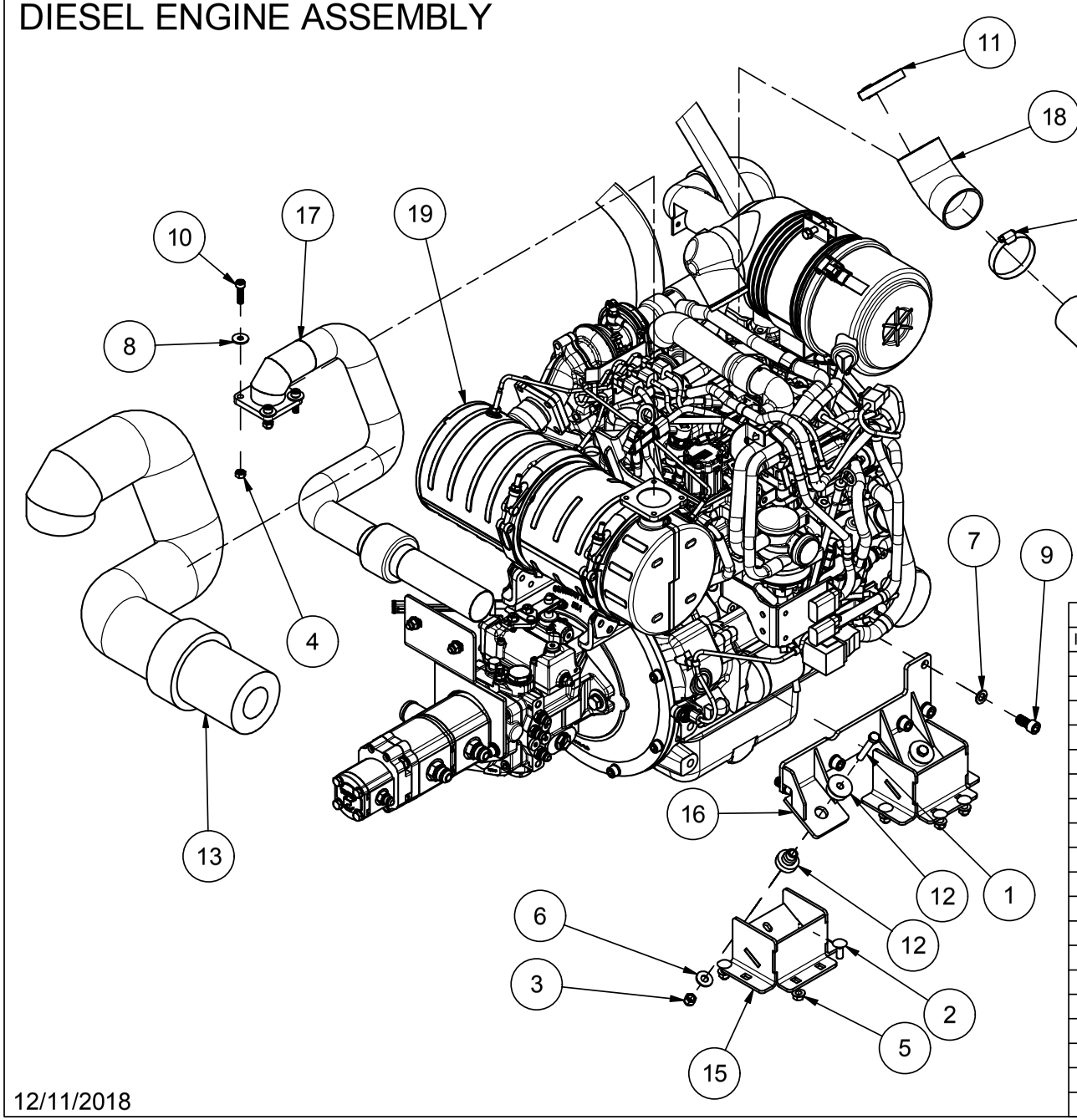


| Parts List | | |
|---|---|---|
| ITEM | PART # | DESCRIPTION |
| 1 | 110493 | BOLT, 3/8-16 X 2.25 |
| 2 | 110556 | Bolt, 3/8-16 X 1 in Carriage |
| 3 | 110618 | NUT, 3/8-16 LOCK NYLON INSERT |
| 4 | 110643 | NUT, M8-1.25, HEX GR 8.8 ZINC |
| 5 | 110645 | NUT, 3/8-16 WIZ FLANGE |
| 6 | 110676 | WASHER, 3/8" FLAT STANDARD |
| 7 | 110690 | WASHER, 12 mm LOCK |
| 8 | 110703 | WASHER, 8 mm FLAT |
| 9 | 111073 | BOLT, M12-1.25 x 25 SHCS |
| 10 | 111168 | Bolt, M8-1.25 x 30, SHCS, Zin |
| 11 | 112035 | CLAMP, HOSE #40 2.375" |
| 12 | 302041 | ISOLATOR - MOUNT |
| 13 | 302111 | TV35D Exhaust Blanket |
| 14 | 311908 | TUBE, INTAKE |
| 15 | 315302 | WELDMENT, ENGINE MOUNT |
| 16 | 315304 | WELDMENT, RH MOTOR MOUNT |
| 17 | 315306 | WELDMENT, TV35D T4F EXHAUST |
| 18 | 342056 | ELBOW, 2.50 x 2.50 45 DEG RUBBER |
| 19 | 343038 | Engine, Kubota, D1803 Diesel Tier 4F |

12/11/2018

# DIESEL ENGINE ASSEMBLY

| Parts List | | |
|---|---|---|
| ITEM | PART # | DESCRIPTION |
| 1 | 110155 | WASHER, 3/8" FLAT SAE |
| 2 | 110178 | BOLT, 3/8-16 X 1.5 SHCS |
| 3 | 110295 | BOLT, M10x1.5 x 30 SHCS |
| 4 | 110366 | BOLT, 3/8-16 X 4.0 |
| 5 | 110419 | BOLT, 1/2-13 X 1.75 |
| 6 | 110444 | Bolt, 5/16-18 X 0.75 Wix Flng Gr 5 Zinc |
| 7 | 110493 | BOLT, 3/8-16 X 2.25 |
| 8 | 110555 | BOLT, M10-1.25 X 30 HHCS, 10.9, ZINC |
| 9 | 110556 | Bolt, 3/8-16 X 1 in Carriage |
| 10 | 110606 | Nut, 5/16-18, Wiz Flng |
| 11 | 110618 | NUT, 3/8-16 LOCK NYLON INSERT |
| 12 | 110645 | NUT, 3/8-16 WIZ FLANGE |
| 13 | 110658 | WASHER, 1/2" FLAT STANDARD |
| 14 | 110666 | WASHER, 1/2" LOCK |
| 15 | 110672 | WASHER, 3/8" LOCK |
| 16 | 110676 | WASHER, 3/8" FLAT STANDARD |
| 17 | 110689 | WASHER, 10mm LOCK |
| 18 | 110690 | WASHER, 12 mm LOCK |
| 19 | 111073 | BOLT, M12-1.25 x 25 SHCS |
| 20 | 301004 | HOSE, UPPER RADIATOR INLET |
| 21 | 301005 | HOSE, LOWER RADIATOR OUTLET |
| 22 | 302017 | CLEVIS - THROTTLE |
| 23 | 302041 | ISOLATOR - MOUNT |
| 24 | 311832 | BRACKET, PUMP CONTROL |
| 25 | 311892 | BRACKET, PUMP SUPPORT |
| 26 | 311906 | COVER, AUX PAD A-MOUNT |
| 27 | 315302 | WELDMENT, ENGINE MOUNT |
| 28 | 315303 | WELDMENT, LH MOTOR MOUNT |
| 29 | 322093 | GASKET, AUX PAD A-MOUNT |
| 30 | 342052 | BELL HOUSING, SAE #5 X SAE B 2-BOLT |
| 31 | 342053 | Flywheel, D1803 Flange |
| 32 | 342054 | Hub, SAE B 13T Splined |
| 33 | 343038 | Engine, Kubota, D1803 Diesel Tier 4F |
| 34 | 511084 | CLAMP, HOSE #28 1.75" |

| 343038 Service Parts | |
|---|---|
| PART # | DESCRIPTION |
| 342057 | Fuel Filter, Kubota D1803 |
| 342058 | Fuel Pump, Kubota D1803 |
| 342059 | Fuel Check Valve, Kubota D1803 |
| 342060 | Display, Murphy PV480 |
| 342061 | Element, Water Seperator, Kubota D1803 |
| 342062 | Engine Oil Filter, Kubota D1803 |
| 342063 | Air Filter, Outer, Kubota D1803 |
| 342064 | Air Filter, Inner, Kubota D1803 |
| 342066 | D1803 Exhasut Gasket |

12/11/2018

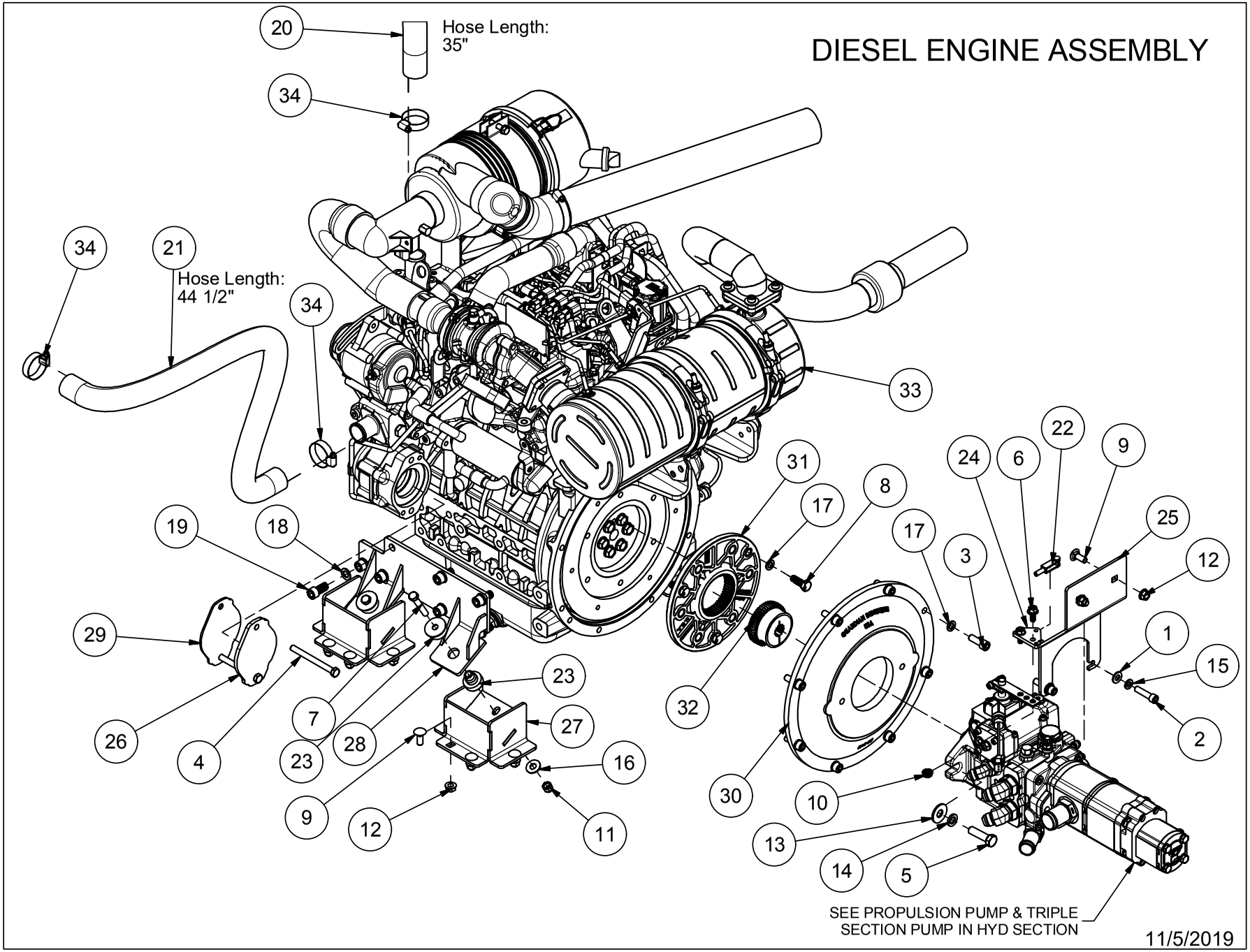
DIESEL ENGINE ASSEMBLY
Hose Length:
35"
Hose Length:
44 1/2"
SEE PROPULSION PUMP & TRIPLE
SECTION PUMP IN HYD SECTION
11/5/2019

# DIESEL ENGINE INSTALLATION

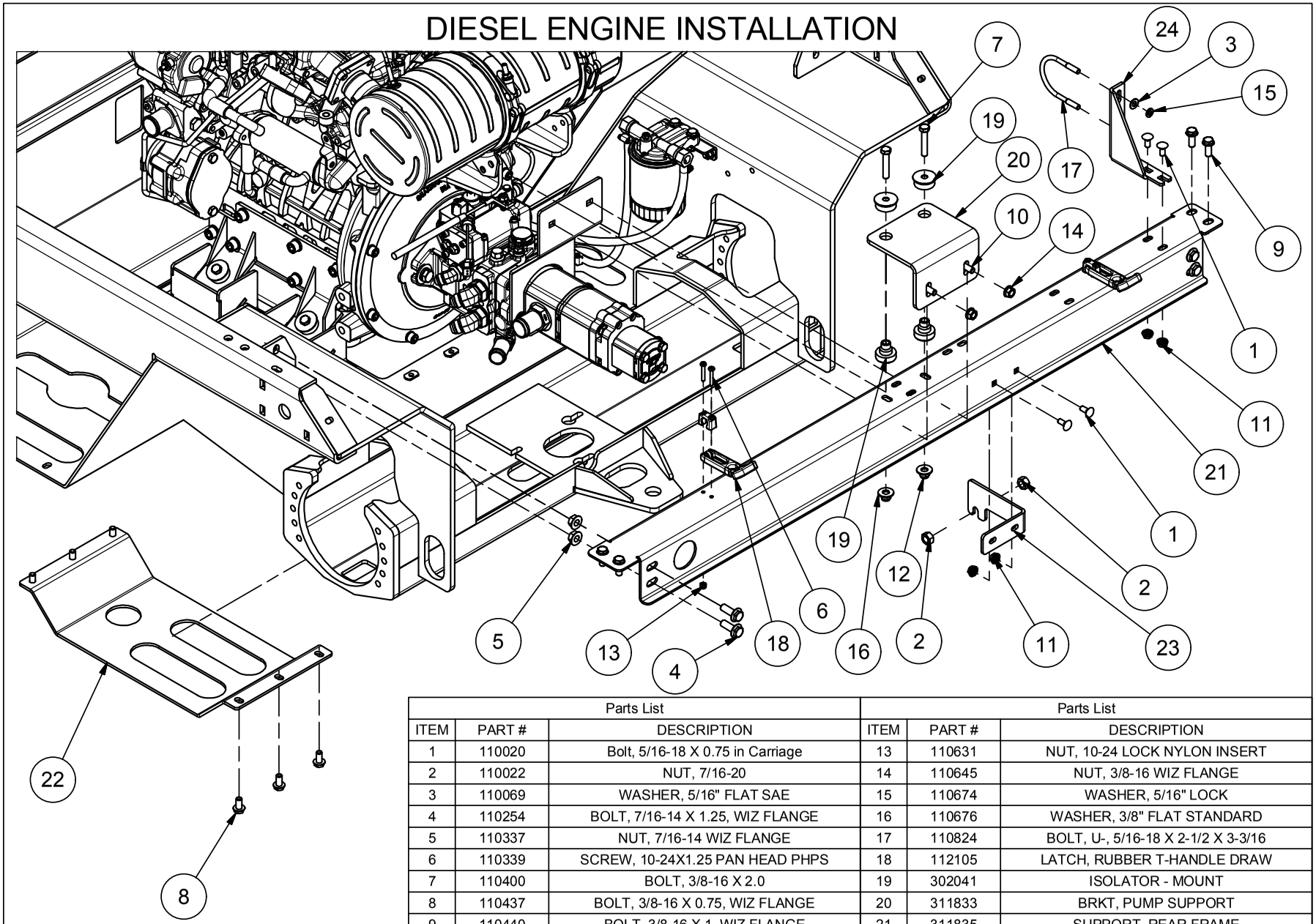


| Parts List | | | Parts List | | |
|---|---|---|---|---|---|
| ITEM | PART # | DESCRIPTION | ITEM | PART # | DESCRIPTION |
| 1 | 110020 | Bolt, 5/16-18 X 0.75 in Carriage | 13 | 110631 | NUT, 10-24 LOCK NYLON INSERT |
| 2 | 110022 | NUT, 7/16-20 | 14 | 110645 | NUT, 3/8-16 WIZ FLANGE |
| 3 | 110069 | WASHER, 5/16" FLAT SAE | 15 | 110674 | WASHER, 5/16" LOCK |
| 4 | 110254 | BOLT, 7/16-14 X 1.25, WIZ FLANGE | 16 | 110676 | WASHER, 3/8" FLAT STANDARD |
| 5 | 110337 | NUT, 7/16-14 WIZ FLANGE | 17 | 110824 | BOLT, U-, 5/16-18 X 2-1/2 X 3-3/16 |
| 6 | 110339 | SCREW, 10-24X1.25 PAN HEAD PHPS | 18 | 112105 | LATCH, RUBBER T-HANDLE DRAW |
| 7 | 110400 | BOLT, 3/8-16 X 2.0 | 19 | 302041 | ISOLATOR - MOUNT |
| 8 | 110437 | BOLT, 3/8-16 X 0.75, WIZ FLANGE | 20 | 311833 | BRKT, PUMP SUPPORT |
| 9 | 110440 | BOLT, 3/8-16 X 1, WIZ FLANGE | 21 | 311835 | SUPPORT, REAR FRAME |
| 10 | 110556 | Bolt, 3/8-16 X 1 in Carriage | 22 | 311890 | PLATE, SKID |
| 11 | 110606 | Nut, 5/16-18, Wiz Flng | 23 | 311903 | BRKT, PUSH/PULL CABLE |
| 12 | 110618 | NUT, 3/8-16 LOCK NYLON INSERT | 24 | 311907 | BRKT, EXHAUST SUPPORT |

04/10/2018

# DIESEL ENGINE INSTALLATION

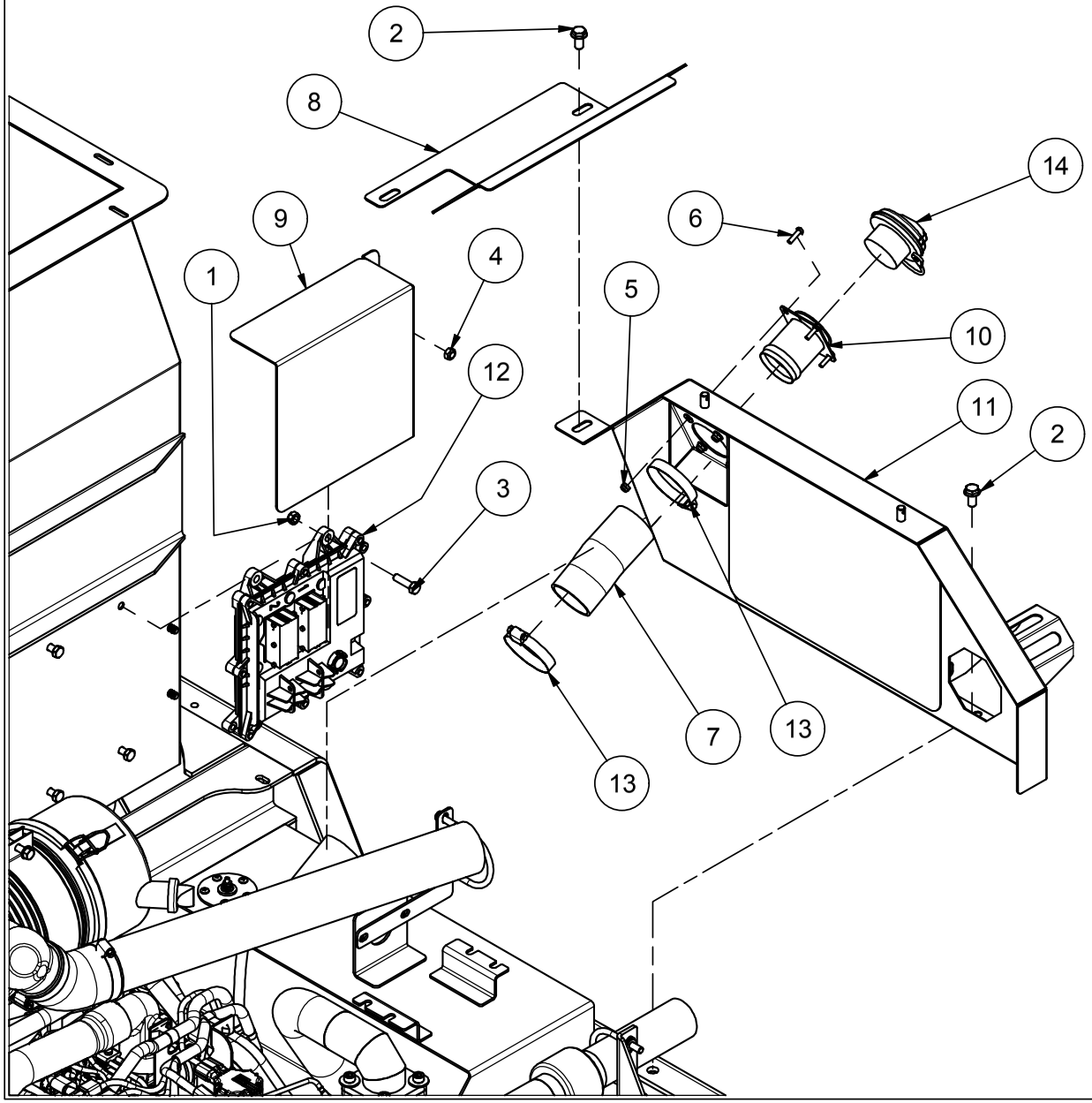


| Parts List | | |
|---|---|---|
| ITEM | PART # | DESCRIPTION |
| 1 | 110230 | NUT, M8 X 1.25, LOCK NYLON |
| 2 | 110437 | BOLT, 3/8-16 X 0.75, WIZ FLANGE |
| 3 | 110486 | BOLT, M8x1.25 x 30 Gr 10.9 |
| 4 | 110600 | NUT, 5/16-18, UNITORQUE LOCK |
| 5 | 110631 | NUT, 10-24 LOCK NYLON INSERT |
| 6 | 110709 | SCREW, 10-24 X 0.75, RHMS |
| 7 | 301006 | Hose, TV35 Fuel Inlet |
| 8 | 311917 | AIR CLEANER DOOR |
| 9 | 311919 | ECU Shield, D1803 |
| 10 | 315301 | WELDMENT, DIESEL FILLER NECK |
| 11 | 315309 | WELDMENT, RH ENGINE SHIELD |
| 12 | 343038 | Engine ECU, Included With Engine |
| 13 | 511003 | CLAMP, HOSE #36 2.25" |
| 14 | 970788 | FUEL CAP, 2" |

04/10/2018

# FUEL COMPONENTS

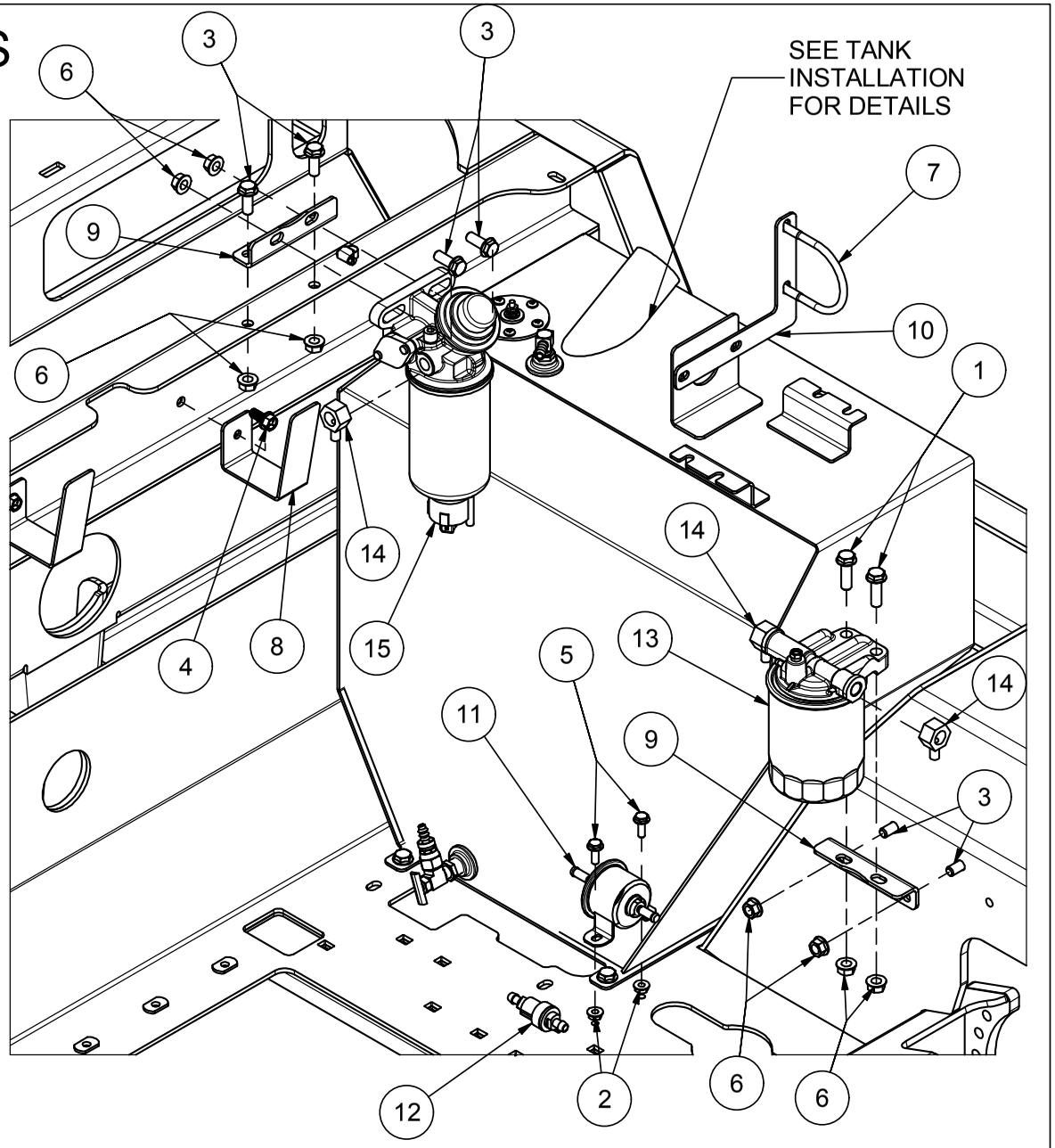


| Parts List | | |
|---|---|---|
| ITEM | PART # | DESCRIPTION |
| 1 | 110161 | BOLT, 3/8-16 X 1.25, WIZ FLANGE |
| 2 | 110290 | NUT, 1/4-20 WIZ FLANGE |
| 3 | 110440 | BOLT, 3/8-16 X 1, WIZ FLANGE |
| 4 | 110444 | Bolt, 5/16-18 X 0.75 Wiz Flng Gr 5 Zinc |
| 5 | 110468 | BOLT, 1/4-20 X 0.75, WIZ FLANGE |
| 6 | 110645 | NUT, 3/8-16 WIZ FLANGE |
| 7 | 110824 | BOLT, U-, 5/16-18 X 2-1/2 X 3-3/16 |
| 8 | 311853 | BRKT, HOSE SUPPORT |
| 9 | 311885 | BRKT, FILTER/SEPARATOR MOUNTING |
| 10 | 311909 | BRKT, INTAKE TUBE SUPPORT |
| 11 | 342058 | Fuel Pump, Kubota D1803 |
| 12 | 342059 | Fuel Check Valve, Kubota D1803 |
| 13 | 343038 | Fuel Filter Assembly, Included with Engine |
| 14 | 343038 | Fuel Adapter, Included with Engine |
| 15 | 343038 | Fuel/Water Separator, Included with Engine |

| SERVICE PARTS | |
|---|---|
| PART # | DESCRIPTION |
| 342057 | Fuel Filter, Kubota D1803 |
| 342061 | Element, Water Seperator, Kubota D1803 |

12/11/2018

# FUEL LINES

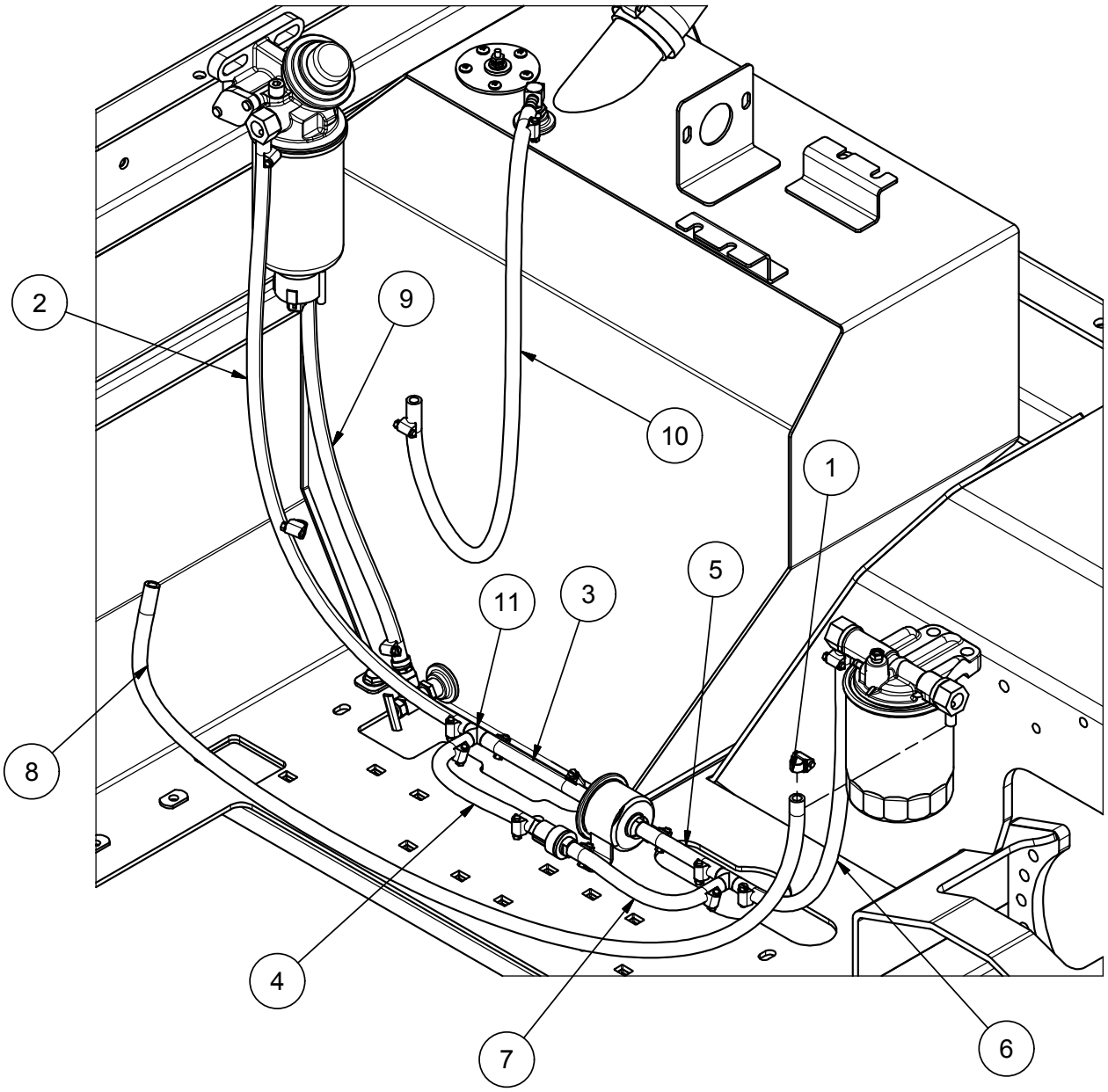


| Parts List | | | | | |
|---|---|---|---|---|---|
| ITEM | PART # | DESCRIPTION | END 1 LOC | END 2 LOC | Length (IN) |
| 1 | 100361 | CLAMP, HOSE #4 .25 MINI | N/A | N/A | N/A |
| 2 | 100756 | Hose, 5/16 High Pressure Fuel | Fuel/Water Seperator | Tee Fitting | 26.5 |
| 3 | 100756 | Hose, 5/16 High Pressure Fuel | Tee Fitting | Fuel Pump | 4.75 |
| 4 | 100756 | Hose, 5/16 High Pressure Fuel | Tee Fitting | Fuel Check Valve | 6.375 |
| 5 | 100756 | Hose, 5/16 High Pressure Fuel | Fuel Pump | Tee Fitting | 3.75 |
| 6 | 100756 | Hose, 5/16 High Pressure Fuel | Tee Fitting | Fuel Filter | 12.9375 |
| 7 | 100756 | Hose, 5/16 High Pressure Fuel | Fuel Check Valve | Tee Fitting | 6.875 |
| 8 | 100756 | Hose, 5/16 High Pressure Fuel | Fuel Filter | Engine | 36.75 |
| 9 | 100756 | Hose, 5/16 High Pressure Fuel | Fuel/Water Seperator | Fuel Tank | 22.0 |
| 10 | 100756 | Hose, 5/16 High Pressure Fuel | Fuel Tank | Engine | 24.375 |
| 11 | 301008 | Fitting, Tee 5/16, Barbed, Brass | N/A | N/A | N/A |

04/10/2018

# Operator Station Assembly

(Seat, Steering Column, Console, & Foot Pedal)

| ITEM | PART # | DESCRIPTION |
|---|---|---|
| 1 | 100373 | TRACTION PAD, FLEX-TREAD, 5.50" |
| 2 | 110020 | Bolt, 5/16-18 X 0.75 in Carriage |
| 3 | 110174 | NUT, 1/4-20, UNITORQUE LOCK |
| 4 | 110264 | BOLT, 10-24 X .5 STAINLESS, PHILLIPS |
| 5 | 110410 | BOLT, 1/4-20 X 2.5 |
| 6 | 110468 | BOLT, 1/4-20 X 0.75, WIZ FLANGE |
| 7 | 110588 | NUT, 1/2-13 WIZ FLANGE |
| 8 | 110606 | NUT, 5/16-18 WIZ FLANGE |
| 9 | 110630 | NUT, 1/4-20 LOCK (NYLON INSERT) |
| 10 | 110640 | Hex Nut M10 |
| 11 | 110645 | NUT, 3/8-16 WIZ FLANGE |
| 12 | 110662 | WASHER, 1/2" FLAT SPECIAL 1.25od |
| 13 | 110689 | WASHER, 10mm LOCK |
| 14 | 110788 | BOLT, 10-24 X .375 STAINLESS, PHILLIPS |
| 15 | 110835 | NUT, 10-24 RIVET ALUMINUM |
| 16 | 110999 | Nut, 10-24 U-Type, .025"-.125" panel |
| 17 | 111030 | BUSHING, IGUS .625 X .50 X .75 |
| 18 | 111049 | Torsion Spring, 90 Deg RH |
| 19 | 111055 | STUD, M10 X 1.5 X 42 GRADE 8.8 |
| 20 | 111056 | BOLT, 1/2 X 3.50 SHOULDER |
| 21 | 111094 | WASHER, 1/2 x .688 MIL SPEC FLAT |
| 22 | 112070 | Bolt, 1/2-13 X 1.25 in Carriage |
| 23 | 152004 | HOLDER, MANUAL |
| 24 | 302017 | CLEVIS - THROTTLE |
| 25 | 302078 | SEAT, I3M SUSPENSION |
| 26 | 302079 | COLUMN ASSY, TILT STEERING |
| 27 | 302080 | CABLE, HYDROSTAT PUSH/PULL |
| 28 | 311726 | MOUNT, STEERING COLUMN |
| 29 | 311737 | PLATE, ORBITAL COVER |
| 30 | 311789 | BRACKET, NEUTRAL SPRING |
| 31 | 311790 | BUSHING, .50 x .266 x 1.975 |
| 32 | 311792 | MOUNT, FOOT PEDAL |
| 33 | 311797 | COVER, FOOT PEDAL |
| 34 | 315265 | WELDMENT, OPERATOR CONSOLE |
| 35 | 315276 | WELDMENT, FOOT PEDAL |
| 36 | 323046 | MOTOR, STEERING ORBITAL |
| 37 | 502087 | Cap, Center Steering |
| 38 | 502088 | Nut, Steering Wheel, 13/16-20 UNEF |
| 39 | 552002 | STEERING WHEEL |
| 40 | 802035 | BOX, PLASTIC, MANUAL OVERRIDE |

Parts List

| ITEM | PART # | DESCRIPTION |
|---|---|---|
| 41 | 810747 | SWITCH SHIM |
| 42 | 810818 | MOUNT, ARM REST SWITCH |
| 43 | 832002 | SWITCH ROLLER PLUNGER |
| 44 | 832004 | SWITCH, PADDLE, CARLING (29261) |
| 45 | 832024 | MOUNT, SWITCH (VMS) |

Parts List

10/3/2017

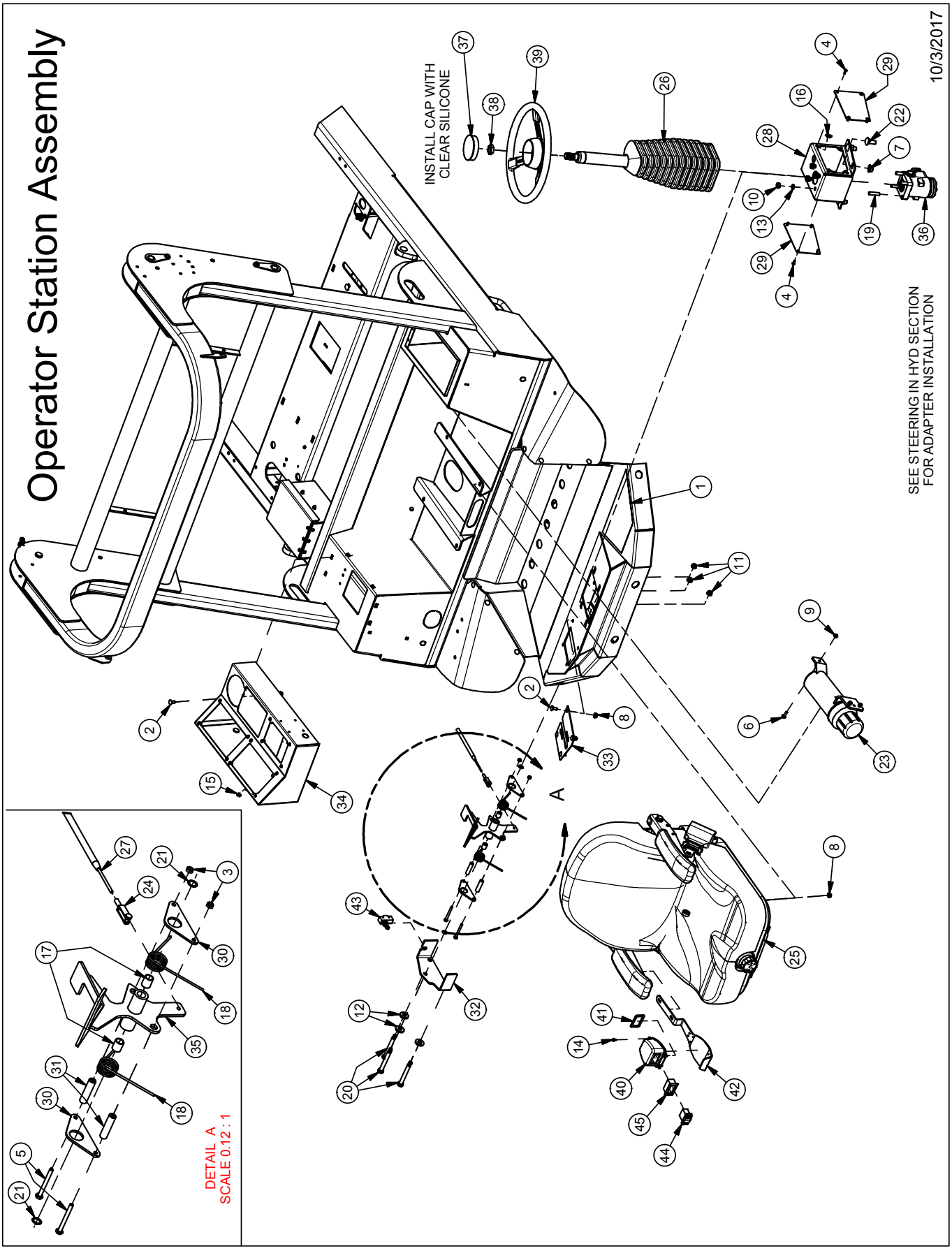
Operator Station Assembly
10/3/2017
INSTALL CAP WITH CLEAR SILICONE
SEE STEERING IN HYD SECTION FOR ADAPTER INSTALLATION
DETAIL A
SCALE 0.12 : 1

# Operator Station Assembly

(Mirrors, Fenders, Bumper, Toolbox Components, etc.)

| Parts List | | |
|---|---|---|
| ITEM | PART # | DESCRIPTION |
| 1 | 110020 | Bolt, 5/16-18 X 0.75 in Carriage |
| 2 | 110119 | NUT, 10-24 LOCK |
| 3 | 110339 | SCREW, 10-24X1.25 PAN HEAD PHPS |
| 4 | 110391 | Bolt, 5/8-11 X 2 in Carriage |
| 5 | 110402 | Bolt, 3/8-16 X 1.25 in Carriage |
| 6 | 110422 | BOLT, 5/16-18 X .75 |
| 7 | 110444 | BOLT, 5/16-18 X 0.75, WIZ FLANGE |
| 8 | 110606 | NUT, 5/16-18 WIZ FLANGE |
| 9 | 110617 | LUGNUT, 1/2-20 GR 5 |
| 10 | 110618 | NUT, 3/8-16 LOCK NYLON INSERT |
| 11 | 110631 | NUT, 10-24 LOCK NYLON INSERT |
| 12 | 110639 | NUT, 5/8-11, UNITORQUE LOCK |
| 13 | 110650 | WASHER, 5/8" FLAT STANDARD |
| 14 | 110674 | WASHER, 5/16" LOCK |
| 15 | 110676 | WASHER, 3/8" FLAT STANDARD |
| 16 | 110788 | BOLT, 10-24 X .375 STAINLESS, PHILLIPS |
| 17 | 110850 | ISOLATOR - BUMPER, 64865K1, 250 LB |
| 18 | 112105 | LATCH, RUBBER T-HANDLE DRAW |
| 19 | 112106 | Keeper, Draw Latch |
| 20 | 211747 | FRICTION WASHER 1.5" |
| 21 | 302091 | TIRE & WHEEL ASSY, FRONT TURF TV30 |
| 22 | 311329 | FENDER - TV30, LH |
| 23 | 311330 | FENDER - TV30, RH |
| 24 | 311711 | LID, TV30 TOOLBOX |
| 25 | 311729 | HINGE, 6" ALUMINUM W/ HOLES |
| 26 | 311730 | BUMPER, TV30 |
| 27 | 311841 | SHIELD, TV30 ROPS |
| 28 | 315173 | BASE -MIRROR, LH, WELDMENT |
| 29 | 315174 | BASE -MIRROR, RH, WELDMENT |
| 30 | 502027 | MIRROR |

| TOOLS STORED IN TOOLBOX | | |
|---|---|---|
| QTY | PART # | DESCRIPTION |
| 2 | 575064 | TOOL, BRAKE RELEASE |
| 1 | 311791 | HANDLE, HOPPER LIFT |
| 1 | 910044 | COVER, VINYL GRIP |
| 2 | 572005 | CYL STOP, 1" THICK |
| 4 | 572003 | CYL STOP, 1/2" THICK |
| 4 | 102077 | CYL STOP, 1/4" THICK |

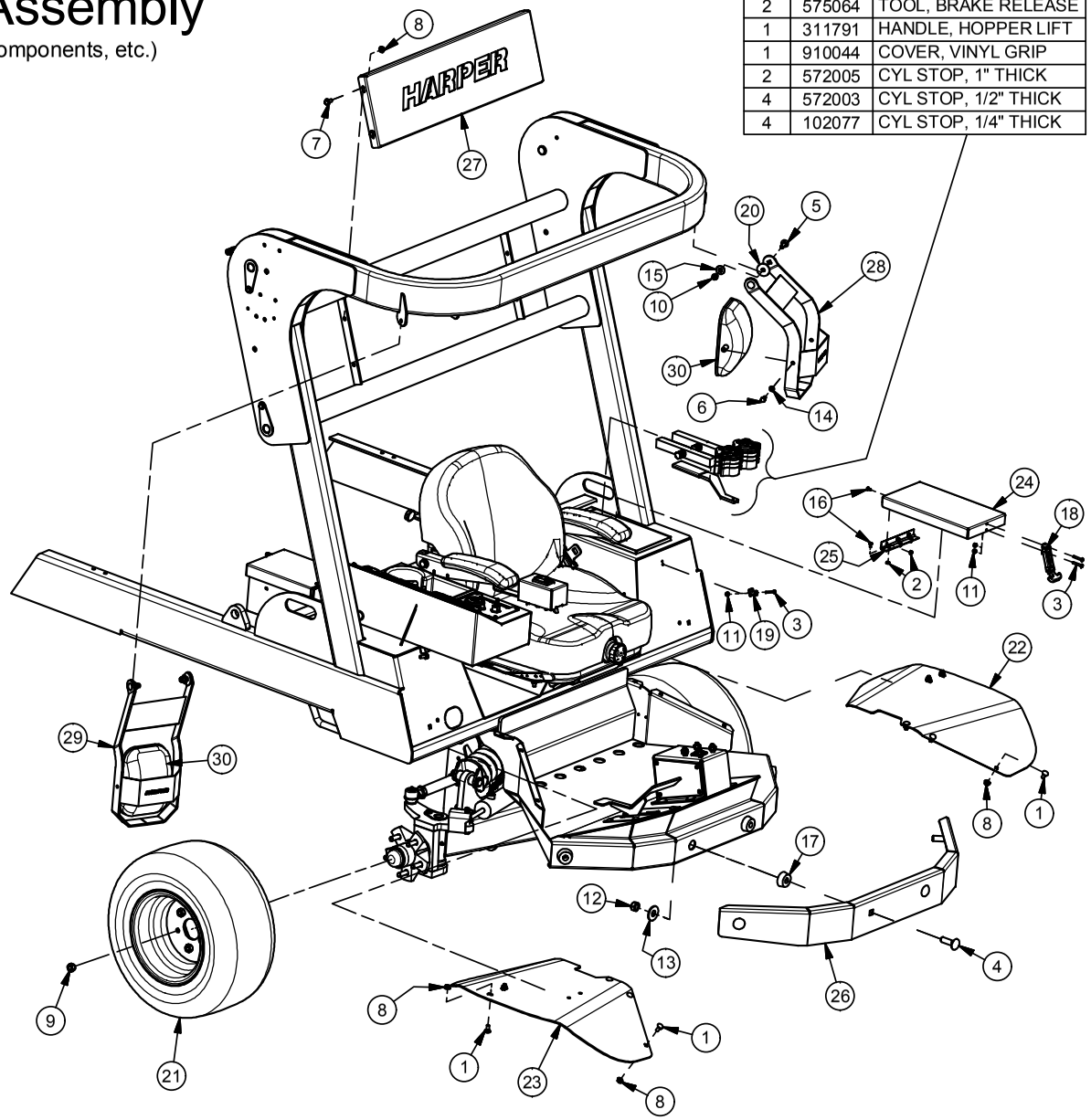


2/18/2016

# Console Assembly

| Parts List | | |
|---|---|---|
| ITEM | PART # | DESCRIPTION |
| 1 | 102062 | PLUG, .75" RECESSED BUTTON |
| 2 | 110020 | Bolt, 5/16-18 X 0.75 in Carriage |
| 3 | 110606 | NUT, 5/16-18 WIZ FLANGE |
| 4 | 110788 | BOLT, 10-24 X .375 STAINLESS, PHILLIPS |
| 5 | 110835 | NUT, 10-24 RIVET ALUMINUM |
| 6 | 130022 | TERMINAL, MALE F/INS PUSH ON |
| 7 | 132179 | Switch, Paddle, Carling DPDT, 2-Pos |
| 8 | 302015 | HOLDER - CUP, MOLDED |
| 9 | 302031 | DECAL, SWITCHES |
| 10 | 302088 | DECAL, COOLING FAN REVERSE ROTATION |
| 11 | 302097 | Decal, Ignition |
| 12 | 311723 | PANEL, ROCKER SWITCH |
| 13 | 315265 | WELDMENT, OPERATOR CONSOLE |
| 14 | 315366 | Weldment, Ignition Dash |
| 15 | 332031 | SWITCH, IGNITION |
| 16 | 332037 | SWITCH, CONTURA II CARLING, DPDT MOMENTARY |
| 17 | 332047 | SWITCH, PADDLE, CARLING DPDT 3P MOMENTARY |
| 18 | 342060 | Display, Murphy PV480 |
| 19 | 730006 | INDICATOR LIGHT |
| 20 | 832003 | SWITCH, PADDLE, CARLING (280063) |
| 21 | 832004 | SWITCH, PADDLE, CARLING (29261) |
| 22 | 832005 | SWITCH, PADDLE, CARLING (29253) |
| 23 | 832007 | SWITCH MOUNT, END |
| 24 | 832008 | SWITCH MOUNT, MIDDLE |
| 25 | 832024 | MOUNT, SWITCH (VMS) |
| 26 | 832033 | HOLE PLUG (VHP) |
| 27 | 902149 | DECAL, READ OPERATORS MANUAL. |

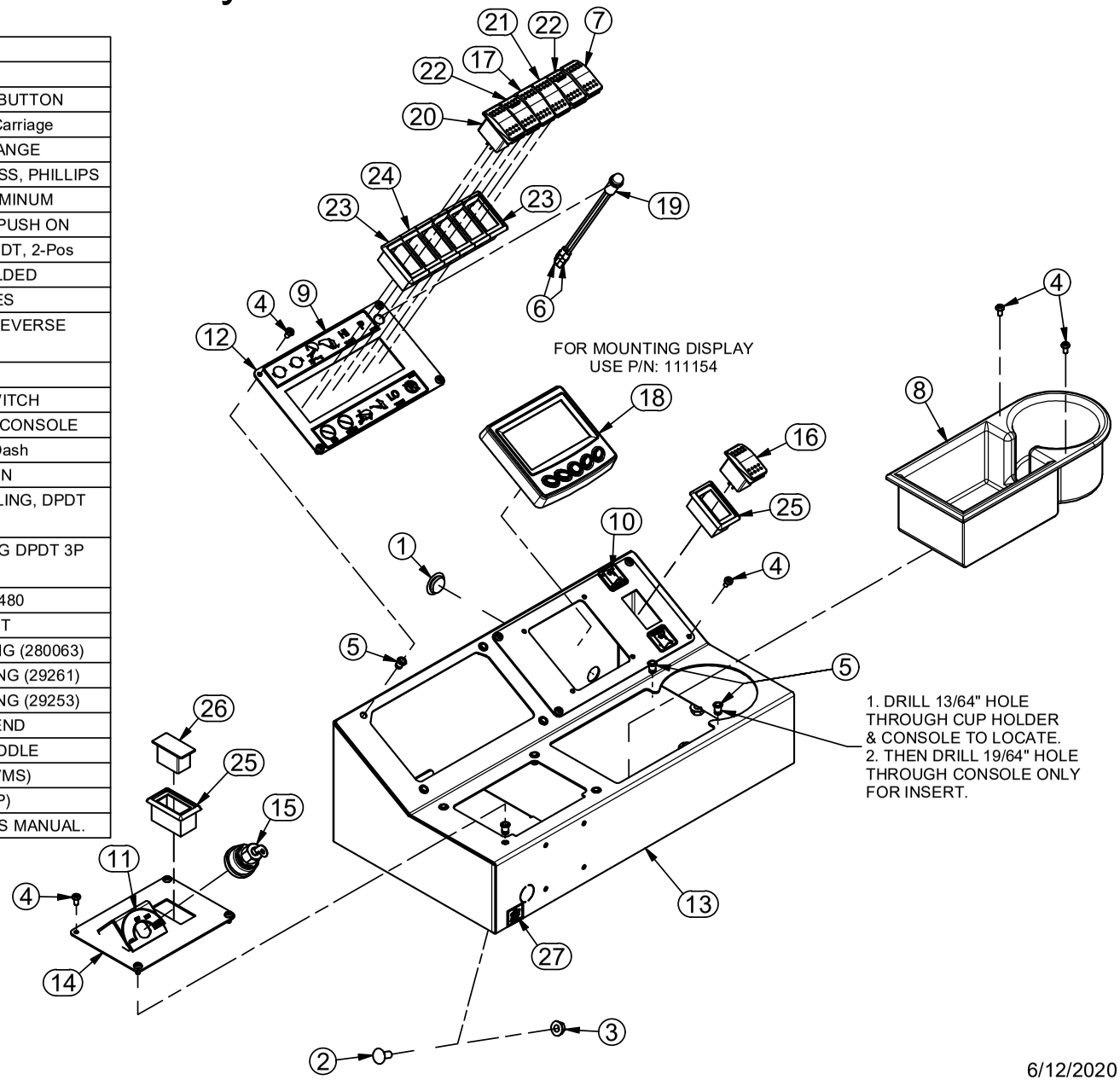


6/12/2020

# ELECTRICAL ASSEMBLY

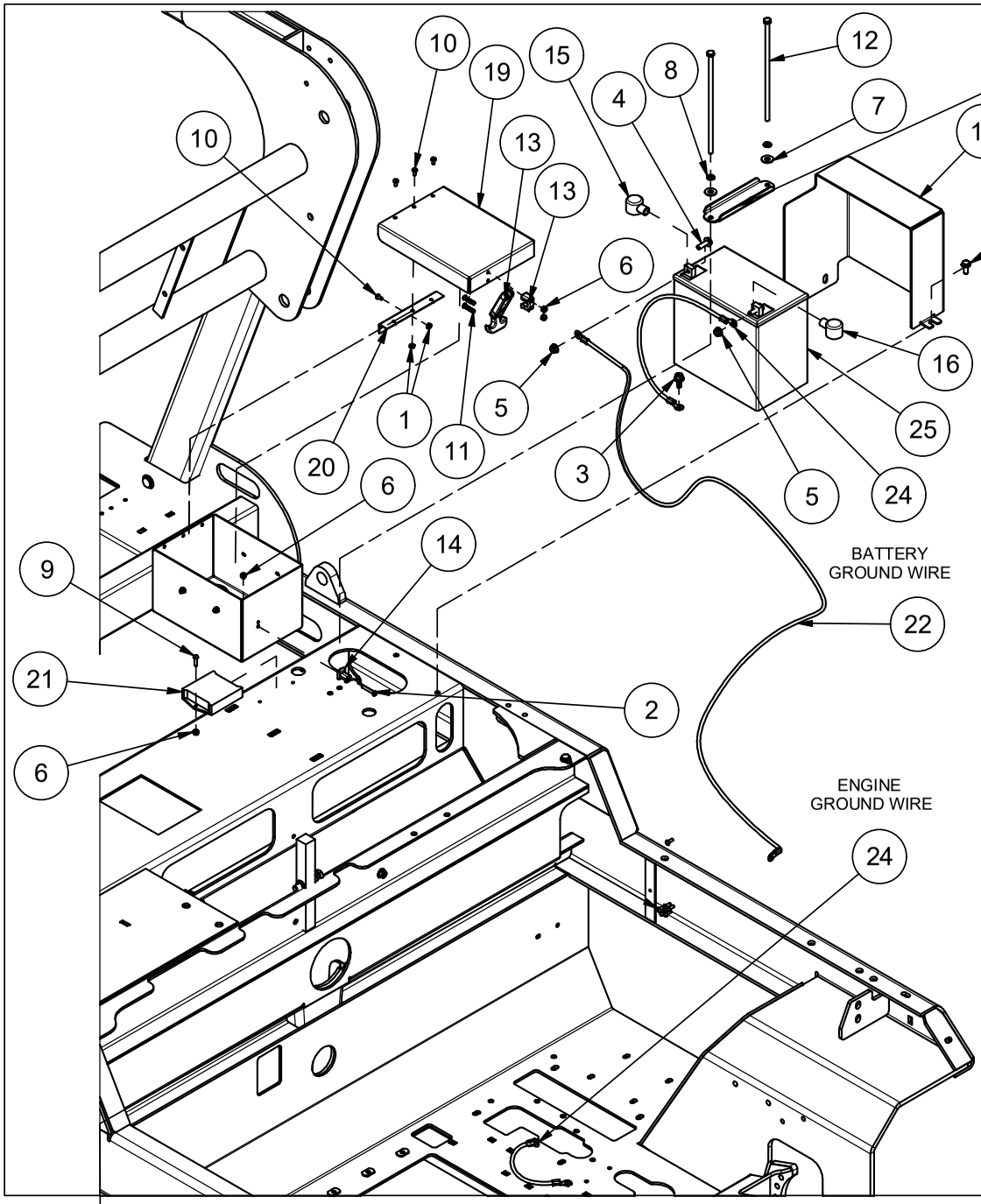


| Parts List | | |
|---|---|---|
| ITEM | PART # | DESCRIPTION |
| 1 | 110119 | NUT, 10-24 LOCK |
| 2 | 110339 | SCREW, 10-24X1.25 PAN HEAD PHPS |
| 3 | 110444 | Bolt, 5/16-18 X .75, WIZ FLANGE |
| 4 | 110459 | BOLT, 5/16-18 X 1, WIZ FLANGE |
| 5 | 110606 | NUT, 5/16-18 WIZ FLANGE |
| 6 | 110631 | NUT, 10-24 LOCK NYLON INSERT |
| 7 | 110665 | WASHER, 5/16" FLAT STANDARD |
| 8 | 110674 | WASHER, 5/16" LOCK |
| 9 | 110709 | SCREW, 10-24 X 0.75, RHMS |
| 10 | 110788 | BOLT, 10-24 X .375 STAINLESS, PHILLIPS |
| 11 | 110838 | Screw, 10-24 X 1, Pan , SS |
| 12 | 111016 | BOLT, 5/16-18 X 9.0 |
| 13 | 112105 | LATCH, RUBBER T-HANDLE DRAW |
| 14 | 112106 | Keeper, Draw Latch |
| 15 | 132069 | BATTERY TERMINAL COVER, POSITIVE |
| 16 | 132070 | BATTERY TERMINAL COVER, NEGATIVE |
| 17 | 311603 | BRACKET - HOLD DOWN, BATTERY |
| 18 | 311604 | BATTERY ENCLOSURE |
| 19 | 311728 | LID, RELAY/FUSE BOX |
| 20 | 311729 | HINGE, 6" ALUMINUM W/ HOLES |
| 21 | 332036 | Inclinometer Switch, Solid-State |
| 22 | 332052 | CABLE, BATTERY, POSITIVE 1 Ga 86" |
| 23 | 510960 | SCREW, 10-24 X 0.5, RHMS |
| 24 | 530051 | CABLE, BATTERY/GND 16" BLACK |
| 25 | 832011 | BATTERY, SEALED GEL W/ L TERMINAL |

For Mounting Fuse Blocks Use:
110631, 110709, 510960

11/5/2019

# Fan Housing Assembly

| Parts List | | | Parts List | | |
|---|---|---|---|---|---|
| ITEM | PART # | DESCRIPTION | ITEM | PART # | DESCRIPTION |
| 1 | 100361 | CLAMP, HOSE #4 .25 MINI | 27 | 120222 | ADAPTER, 6MJ-6MB90 |
| 2 | 100365 | MOLDING - EDGE GUARD, 5/32 | 28 | 120253 | ADAPTER, 10MJ-12MB |
| 3 | 100567 | KEY, 3/8 X 3/8 X 1.75 in | 29 | 302021 | GASKET - FAN EXHAUST |
| 4 | 100613 | SEAL, RUBBER .50 X .187 | 30 | 302022 | GASKET - RETURN AIR |
| 5 | 102001 | HOSE, 5/16 VACUUM | 31 | 302060 | SWIVEL, GARDEN HOSE-TO-PIPE |
| 6 | 110020 | Bolt, 5/16-18 X 0.75 in Carriage | 32 | 302061 | LOCKNUT, 3/4 NPT |
| 7 | 110042 | Bolt, 1/2-13 X 1.75 in Carriage | 33 | 302062 | PLUG, GARDEN HOSE |
| 8 | 110093 | SetScrew, 3/8-16 X 1.25 | 34 | 302082 | LINER, BLOWER HOUSING |
| 9 | 110154 | Bolt, 1/4-20 X 0.75 in Carriage | 35 | 311188 | SHAFT - IMPELLER, TV30 |
| 10 | 110290 | NUT, 1/4-20 WIZ FLANGE | 36 | 311212 | COVER - HOSE PORT, FUNNEL |
| 11 | 110326 | Bolt, 1/4-20 X 1 in Carriage | 37 | 311380 | STRAP - HOLD DOWN, LINER |
| 12 | 110343 | BOLT, 1/2 X 3/8 SHOULDER | 38 | 311385 | BRACKET - MOUNT, FRONT FUNNEL, LH |
| 13 | 110419 | BOLT, 1/2-13 X 1.75 | 39 | 311386 | BRACKET - MOUNT, FRONT FUNNEL, RH |
| 14 | 110426 | BOLT, 5/16-18 X 0.5, WIZ FLANGE | 40 | 311649 | COVER, HOSE CLEANOUT ACCESS |
| 15 | 110539 | BOLT, 7/16-14 X 1.25 | 41 | 311914 | ADAPTER PLATE |
| 16 | 110556 | Bolt, 3/8-16 X 1 in Carriage | 42 | 315114 | IMPELLER WELDMENT |
| 17 | 110603 | NUT, 5/16-18 LOCK (NYLON) | 43 | 315158 | ADAPTER - FAN EXHAUST, WELDMENT |
| 18 | 110606 | NUT, 5/16-18 WIZ FLANGE | 44 | 315159 | ADAPTER - RETURN AIR, WELDMENT |
| 19 | 110610 | NUT, 1/2-13 | 45 | 315261 | WELDMENT, BLOWER HOUSING |
| 20 | 110630 | NUT, 1/4-20 LOCK (NYLON INSERT) | 46 | 315310 | Weldment, Funnel TV35 |
| 21 | 110645 | NUT, 3/8-16 WIZ FLANGE | 47 | 315311 | WELDMENT, FAN COUPLER |
| 22 | 110666 | WASHER, 1/2" LOCK | 48 | 342009 | BEARING, 4FNG 1 1/2", HD |
| 23 | 110671 | WASHER, 7/16" LOCK | 49 | 500265 | COOLANT BOTTLE |
| 24 | 110826 | NUT, 3/8-16 GR 5 | 50 | 923004 | MOTOR, 1.76 CI, FAN DRIVE |
| 25 | 110884 | PLUG - 11/16", NON-VENTED | 51 | 940113 | KEY, 3/8 X 5 |
| 26 | 110890 | PLUG - 1-1/4", FINISHING | | | |

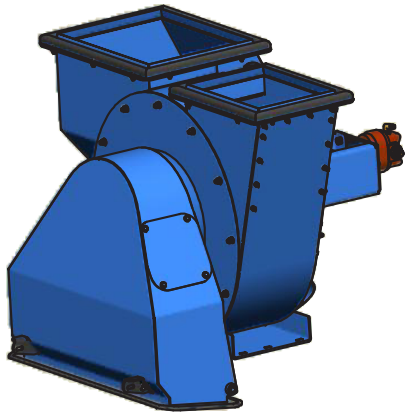

# Fan Housing Assembly

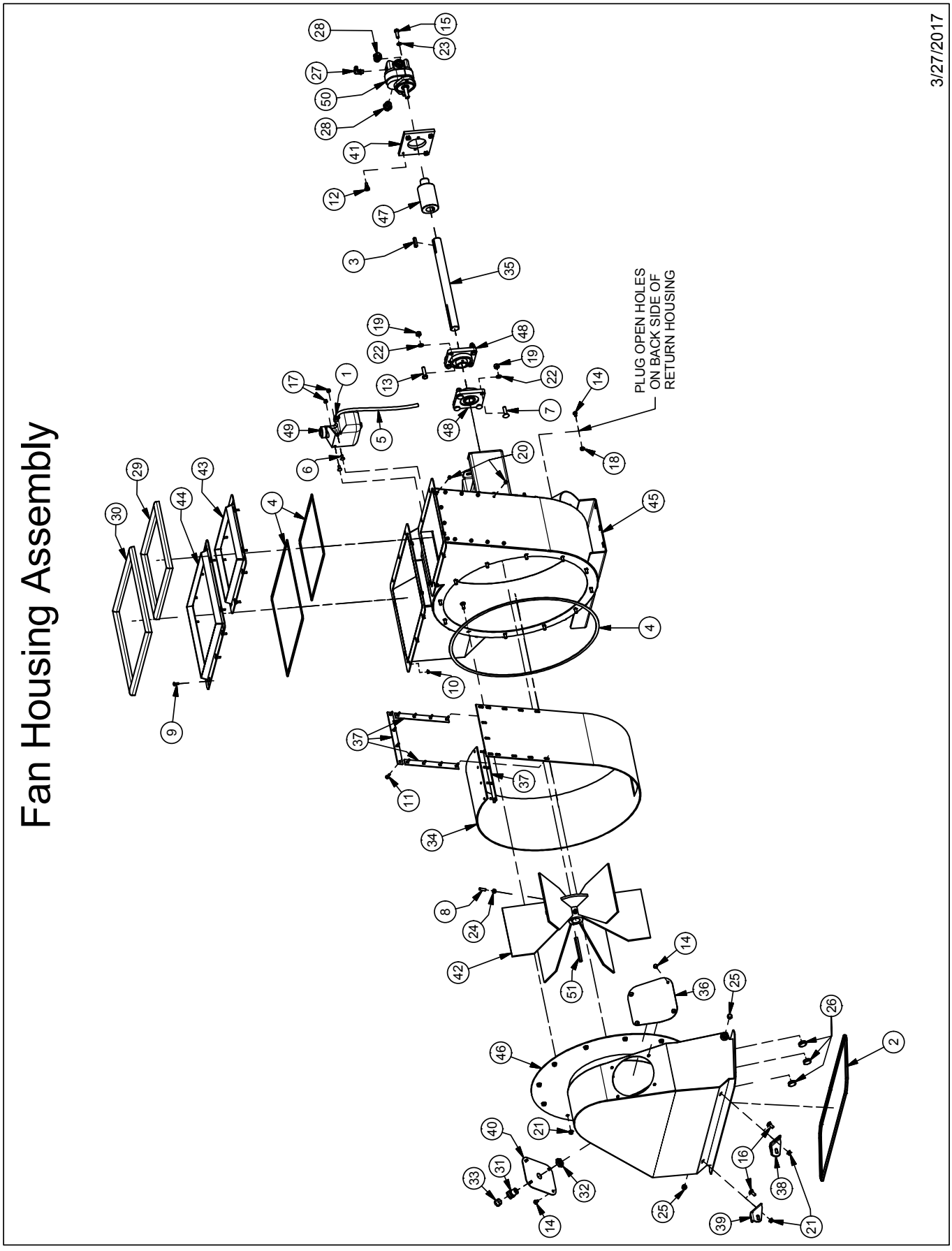

# FAN HOUSING INSTALLATION

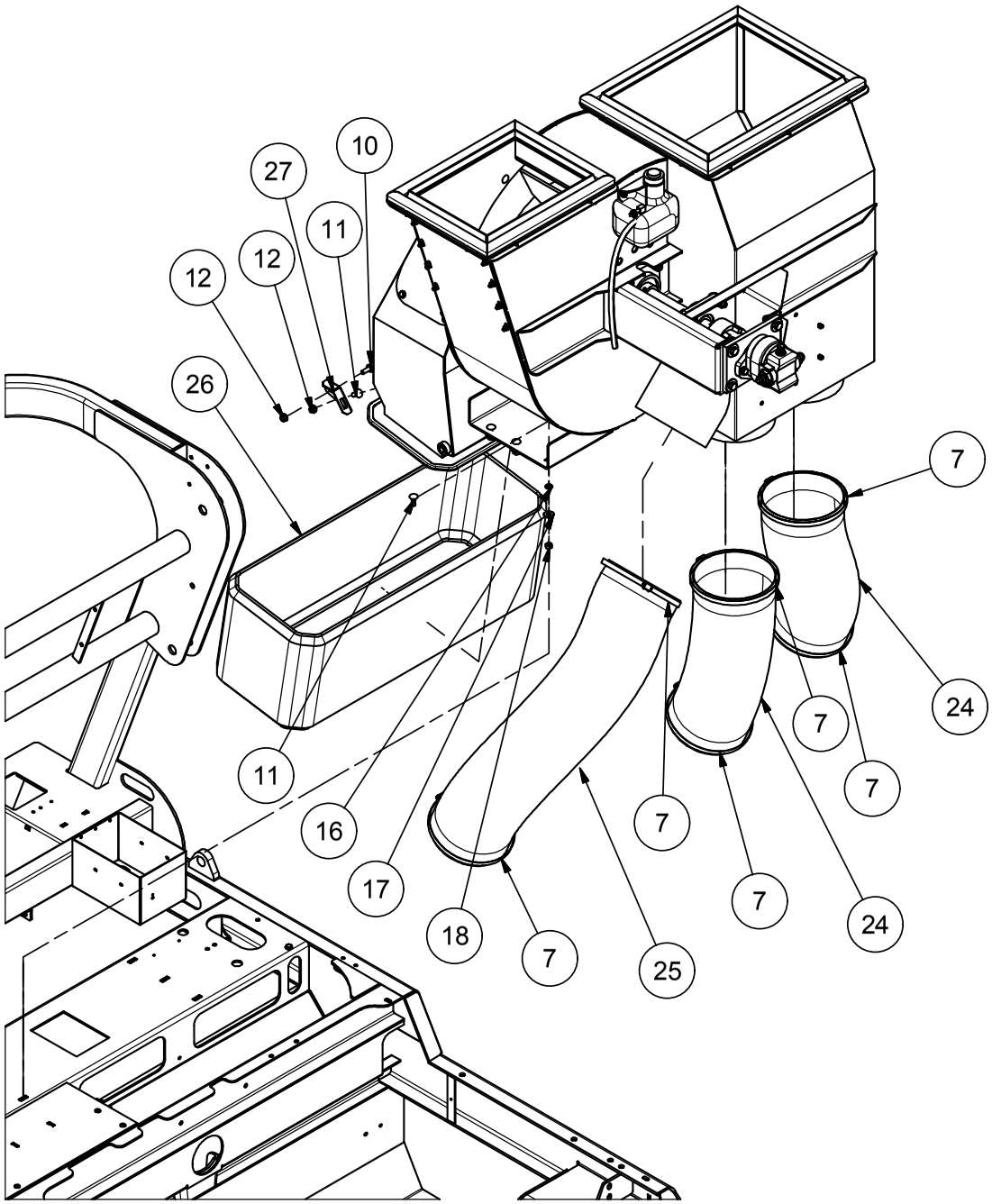


| Parts List | | |
|---|---|---|
| ITEM | PART # | DESCRIPTION |
| 1 | 100361 | CLAMP, HOSE #4 .25 MINI |
| 2 | 102001 | HOSE, 5/16 VACUUM |
| 3 | 110071 | 1/4-20 U-TYPE TAPPED HOLE |
| 4 | 110086 | BOLT, 1/2-13 X 1.0 |
| 5 | 110290 | NUT, 1/4-20 WIZ FLANGE |
| 6 | 110298 | WASHER, 1/4" FLAT SAE |
| 7 | 110311 | CLAMP, HOSE #912 8.00" |
| 8 | 110358 | Bolt, 1/4-20 X 0.625 in Carriage |
| 9 | 110437 | BOLT, 3/8-16 X 0.75, WIZ FLANGE |
| 10 | 110440 | BOLT, 3/8-16 X 1, WIZ FLANGE |
| 11 | 110556 | Bolt, 3/8-16 X 1 in Carriage |
| 12 | 110645 | NUT, 3/8-16 WIZ FLANGE |
| 13 | 110658 | WASHER, 1/2" FLAT STANDARD |
| 14 | 110666 | WASHER, 1/2" LOCK |
| 15 | 110667 | WASHER, 1/4" LOCK |
| 16 | 110672 | WASHER, 3/8" LOCK |
| 17 | 110676 | WASHER, 3/8" FLAT STANDARD |
| 18 | 110826 | NUT, 3/8-16 GR 5 |
| 19 | 110842 | Screw, 1/4-20 X 3/4 Wing Head |
| 20 | 112007 | CLAMP, 1.75", T-BOLT |
| 21 | 120373 | ADAPTER, 20BH-16MB |
| 22 | 120444 | ADAPTER, 12MJ-16MB-12MJ |
| 23 | 120691 | ADAPTER, 22BH-24MB |
| 24 | 302009 | TUBE, FLEX 8" X 2' |
| 25 | 302010 | TUBE, FLEX 8" X 4' |
| 26 | 302023 | RING - CANVAS, TV30 |
| 27 | 311385 | BRACKET - MOUNT, FRONT FUNNEL, LH |
| 28 | 311732 | GUIDE, COOLING SCREEN |
| 29 | 311736 | ANGLE, SCREEN SUPPORT |
| 30 | 315270 | WELDMENT, COOLING SCREEN |
| 31 | 343036 | COOLING PACKAGE, RADIATOR & OIL COOLER |

04/05/2018

# RADIATOR & OIL COOLER INSTALLATION

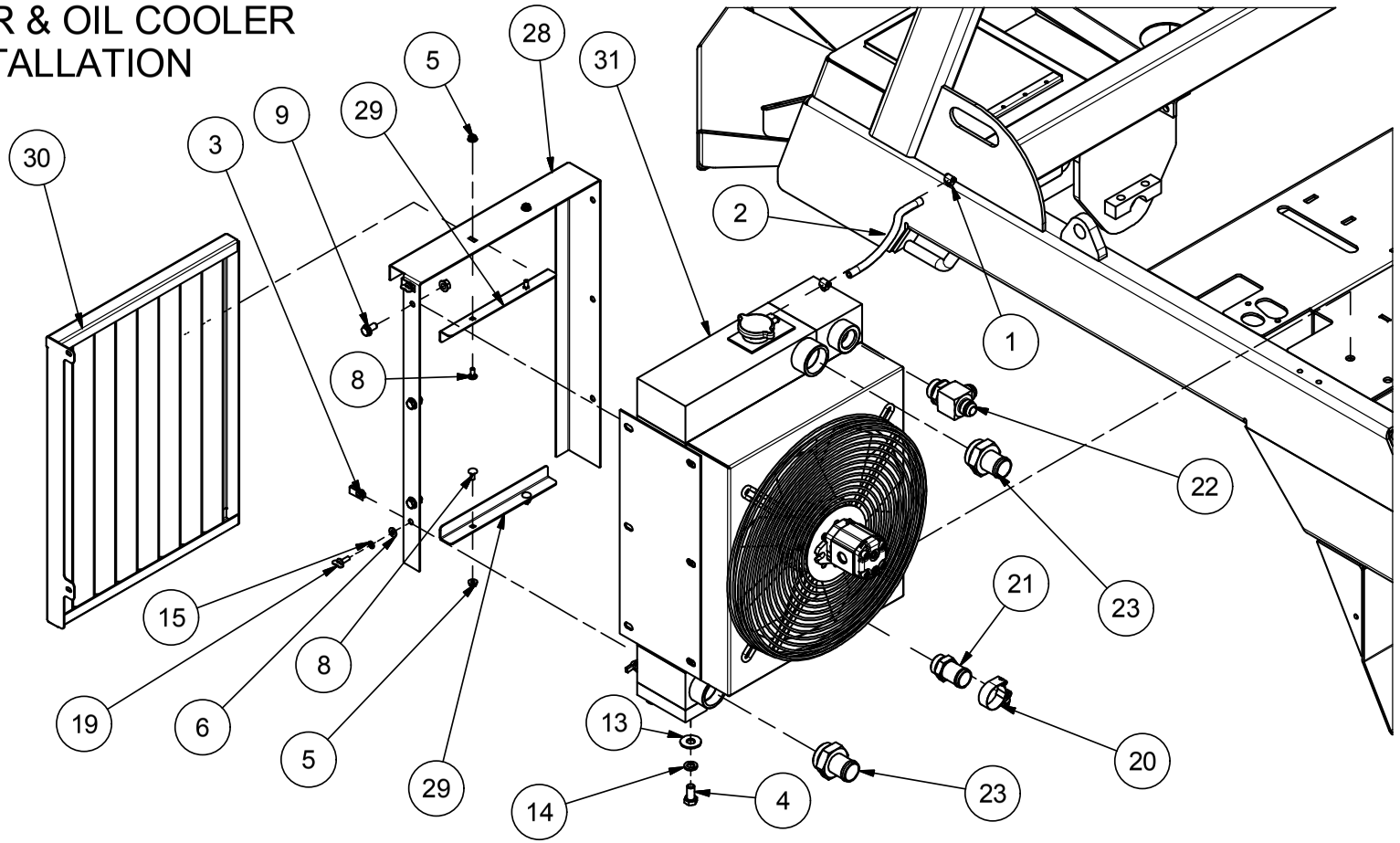


| Parts List | | | Parts List | | | Parts List | | |
|---|---|---|---|---|---|---|---|---|
| ITEM | PART # | DESCRIPTION | ITEM | PART # | DESCRIPTION | ITEM | PART # | DESCRIPTION |
| 1 | 100361 | CLAMP, HOSE #4 .25 MINI | 12 | 110645 | NUT, 3/8-16 WIZ FLANGE | 23 | 120691 | ADAPTER, 22BH-24MB |
| 2 | 102001 | HOSE, 5/16 VACUUM | 13 | 110658 | WASHER, 1/2" FLAT STANDARD | 24 | 302009 | TUBE, FLEX 8" X 2' |
| 3 | 110071 | 1/4-20 U-TYPE TAPPED HOLE | 14 | 110666 | WASHER, 1/2" LOCK | 25 | 302010 | TUBE, FLEX 8" X 4' |
| 4 | 110086 | BOLT, 1/2-13 X 1.0 | 15 | 110667 | WASHER, 1/4" LOCK | 26 | 302023 | RING - CANVAS, TV30 |
| 5 | 110290 | NUT, 1/4-20 WIZ FLANGE | 16 | 110672 | WASHER, 3/8" LOCK | 27 | 311385 | BRACKET - MOUNT, FRONT FUNNEL, LH |
| 6 | 110298 | WASHER, 1/4" FLAT SAE | 17 | 110676 | WASHER, 3/8" FLAT STANDARD | 28 | 311732 | GUIDE, COOLING SCREEN |
| 7 | 110311 | CLAMP, HOSE #912 8.00" | 18 | 110826 | NUT, 3/8-16 GR 5 | 29 | 311736 | ANGLE, SCREEN SUPPORT |
| 8 | 110358 | Bolt, 1/4-20 X 0.625 in Carriage | 19 | 110842 | Screw, 1/4-20 X 3/4 Wing Head | 30 | 315270 | WELDMENT, COOLING SCREEN |
| 9 | 110437 | BOLT, 3/8-16 X 0.75, WIZ FLANGE | 20 | 112007 | CLAMP, 1.75", T-BOLT | 31 | 343036 | COOLING PACKAGE, RADIATOR & OIL COOLER |
| 10 | 110440 | BOLT, 3/8-16 X 1, WIZ FLANGE | 21 | 120373 | ADAPTER, 20BH-16MB | | | |
| 11 | 110556 | Bolt, 3/8-16 X 1 in Carriage | 22 | 120444 | ADAPTER, 12MJ-16MB-12MJ | | | |

04/05/2018

# Hopper & Door Assembly

| Parts List | | |
|---|---|---|
| ITEM | PART # | DESCRIPTION |
| 1 | 102004 | D-Seal, Rubber 1.00" x 1.00" |
| 2 | 110020 | Bolt, 5/16-18 X 0.75 in Carriage |
| 3 | 110290 | NUT, 1/4-20 WIZ FLANGE |
| 4 | 110328 | BOLT, 5/16-18 X 1 SHFHCS |
| 5 | 110354 | BOLT, 1/4-20 X 2.0 HEX HEAD |
| 6 | 110358 | Bolt, 1/4-20 X 0.625 in Carriage |
| 7 | 110426 | BOLT, 5/16-18 X 0.5, WIZ FLANGE |
| 8 | 110440 | BOLT, 3/8-16 X 1, WIZ FLANGE |
| 9 | 110444 | BOLT, 5/16-18 X 0.75, WIZ FLANGE |
| 10 | 110576 | BOLT, 5/8-11 X 1.5 GR 5 |
| 11 | 110606 | NUT, 5/16-18 WIZ FLANGE |
| 12 | 110616 | NUT, 5/16", J-TYPE, CAGE, .5C |
| 13 | 110639 | NUT, 5/8-11, UNITORQUE LOCK |
| 14 | 110645 | NUT, 3/8-16 WIZ FLANGE |
| 15 | 110663 | WASHER, 5/8" FLAT SAE |
| 16 | 110804 | NUT, 3/8-16 U-TYPE .75L |
| 17 | 111072 | RUBBER BUMPER, .75 x .625, 5/16-18 THREADED HOLE |
| 18 | 122003 | DOUBLE HOSE CLAMP |
| 19 | 311248 | BAFFLE - RETURN AIR, TV30 |
| 20 | 311286 | SKIRT - HOPPER, FRONT |
| 21 | 311287 | SKIRT - HOPPER, LH |
| 22 | 311288 | SKIRT - HOPPER, RH |
| 23 | 311657 | PLATE, HINGE |
| 24 | 311691 | SIGHT GLASS, HOPPER |
| 25 | 311692 | Backing Plate, Sight Glass |
| 26 | 311856 | SCREEN, RH HOPPER RETURN AIR |
| 27 | 311857 | SCREEN, LH HOPPER RETURN AIR |
| 28 | 315125 | HOPPER WELDMENT |
| 29 | 315131 | DEFLECTOR - DEBRIS, HOPPER, WELDMENT |
| 30 | 315134 | DOOR - TV30, WELDMENT |
| 31 | 315253 | LUG WELDMENT, LH DOOR |
| 32 | 315254 | LUG WELDMENT, RH DOOR |
| 33 | 315257 | PIN WELDMENT, HOPPER DOOR |
| 34 | 315294 | LUG WELDMENT, RH HOPPER |
| 35 | 315295 | LUG WELDMENT, LH HOPPER |
| 36 | 522104 | DOUBLE HOSE CLAMP |
| 37 | 522105 | DOUBLE COVERPLATE |
| 38 | 923011 | Cylinder, 2 X 6, -6 SAE Cross |

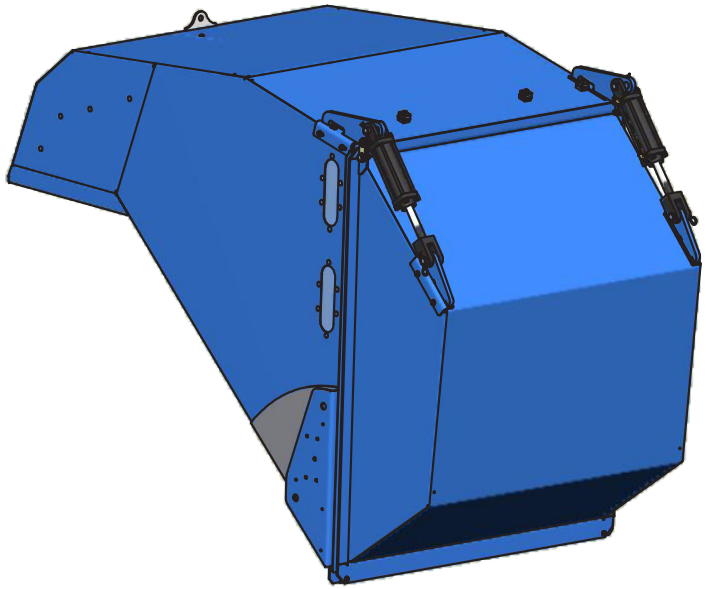

7/19/2016

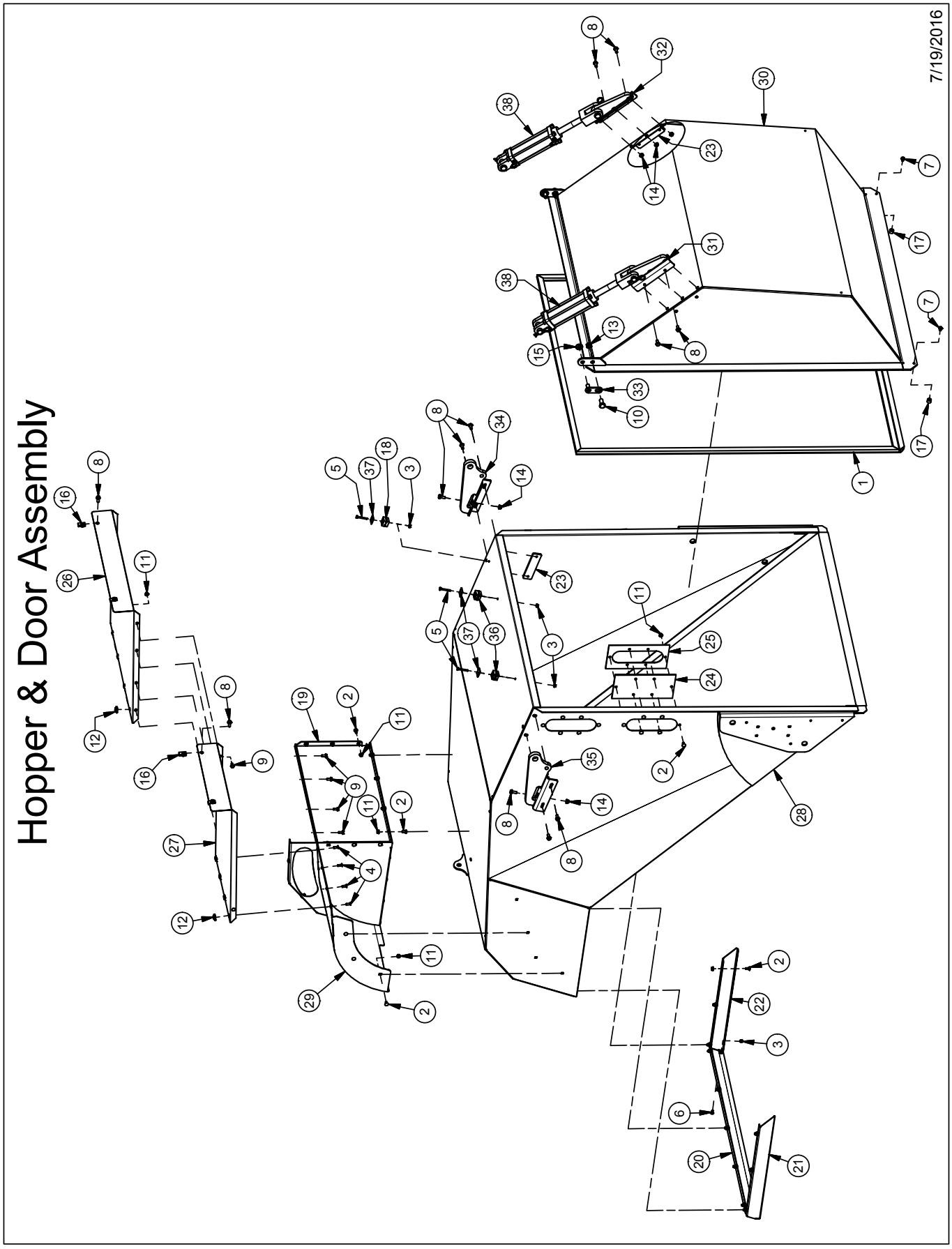
Hopper & Door Assembly
7/19/2016

# HOPPER INSTALLATION

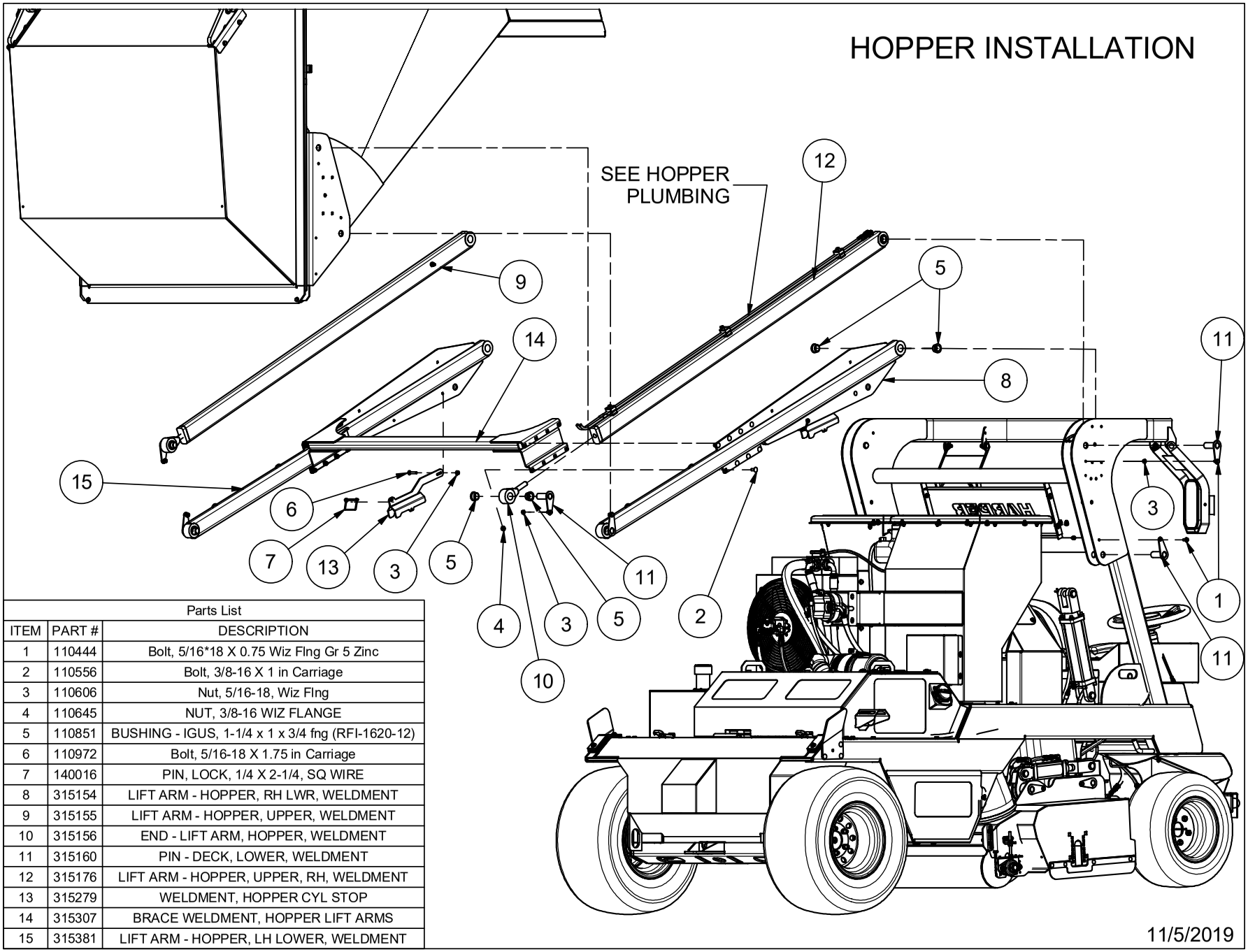


| Parts List | | |
|---|---|---|
| ITEM | PART # | DESCRIPTION |
| 1 | 110444 | Bolt, 5/16*18 X 0.75 Wiz Flng Gr 5 Zinc |
| 2 | 110556 | Bolt, 3/8-16 X 1 in Carriage |
| 3 | 110606 | Nut, 5/16-18, Wiz Flng |
| 4 | 110645 | NUT, 3/8-16 WIZ FLANGE |
| 5 | 110851 | BUSHING - IGUS, 1-1/4 x 1 x 3/4 fng (RFI-1620-12) |
| 6 | 110972 | Bolt, 5/16-18 X 1.75 in Carriage |
| 7 | 140016 | PIN, LOCK, 1/4 X 2-1/4, SQ WIRE |
| 8 | 315154 | LIFT ARM - HOPPER, RH LWR, WELDMENT |
| 9 | 315155 | LIFT ARM - HOPPER, UPPER, WELDMENT |
| 10 | 315156 | END - LIFT ARM, HOPPER, WELDMENT |
| 11 | 315160 | PIN - DECK, LOWER, WELDMENT |
| 12 | 315176 | LIFT ARM - HOPPER, UPPER, RH, WELDMENT |
| 13 | 315279 | WELDMENT, HOPPER CYL STOP |
| 14 | 315307 | BRACE WELDMENT, HOPPER LIFT ARMS |
| 15 | 315381 | LIFT ARM - HOPPER, LH LOWER, WELDMENT |

11/5/2019

# WHEEL AND SHIELD INSTALLATION

| Parts List | | |
|---|---|---|
| ITEM | PART # | DESCRIPTION |
| 1 | 100613 | SEAL, RUBBER .50 X .187 |
| 2 | 110119 | NUT, 10-24 LOCK |
| 3 | 110298 | WASHER, 1/4" FLAT SAE |
| 4 | 110339 | SCREW, 10-24X1.25 PAN HEAD PHPS |
| 5 | 110600 | NUT, 5/16-18, UNITORQUE LOCK |
| 6 | 110608 | NUT, 5/16-18 |
| 7 | 110617 | LUGNUT, 1/2-20 GR 5 |
| 8 | 110631 | NUT, 10-24 LOCK NYLON INSERT |
| 9 | 110665 | WASHER, 5/16" FLAT STANDARD |
| 10 | 110667 | WASHER, 1/4" LOCK |
| 11 | 110674 | WASHER, 5/16" LOCK |
| 12 | 110788 | BOLT, 10-24 X .375 STAINLESS, PHILLIPS |
| 13 | 110842 | Screw, 1/4-20 X 3/4 Wing Head |
| 14 | 112106 | Keeper, Draw Latch |
| 15 | 302008 | 26" MULTI-TRACK TIRE & WHEEL |
| 16 | 302091 | TIRE & WHEEL ASSY, FRONT TURF TV30 |
| 17 | 311729 | HINGE, 6" ALUMINUM W/ HOLES |
| 18 | 311918 | AIR CLEANER DOOR |
| 19 | 311919 | ECU Shield, D1803 |
| 20 | 312022 | CLIP, HAIRPIN 3/32 x 1.625 |
| 21 | 315271 | WELDMENT, TV30 DECK |
| 22 | 315274 | SHIELD, DECK CHAIN |
| 23 | 315289 | WELDMENT, REAR ENG SHIELD |
| 24 | 315296 | WELDMENT, RH LOWER SHIELD |
| 25 | 315308 | WELDMENT, ENGINE COVER |
| 26 | 502133 | Latch |

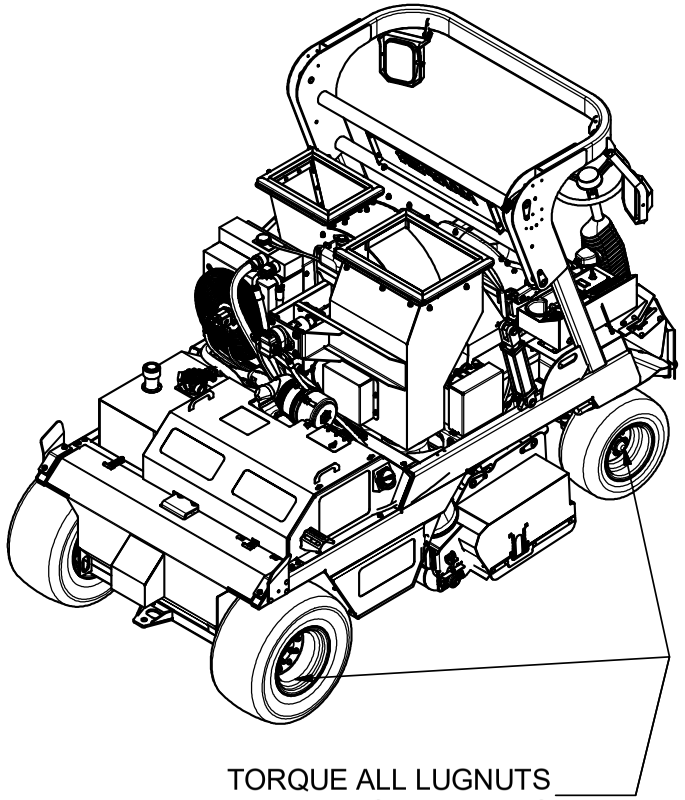


| 302008 Service Parts | |
|---|---|
| Part # | DESCRIPTION |
| 342021 | Wheel, 12 X 10.5; 5 on 4.5 |
| 342020 | Tire, 26 X 12 X12/6 Grassmaster |

| 302091 Service Parts | |
|---|---|
| Part # | DESCRIPTION |
| 342019 | Wheel, 10 X 7; 5 on 4.5 |
| 342051 | Tire, 20 X 10-10 PR/TL Grassmaster |

04/05/2018

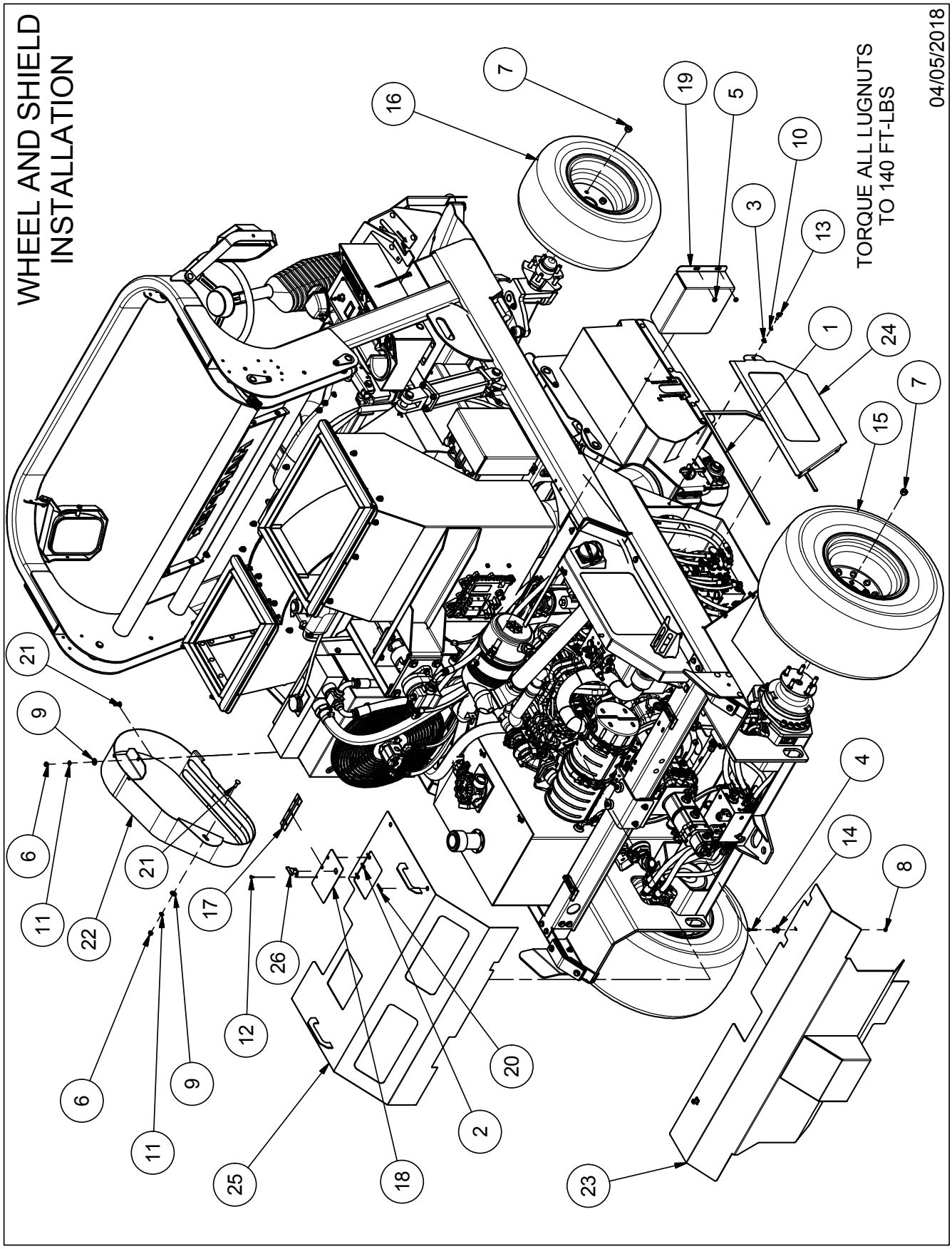
WHEEL AND SHIELD
INSTALLATION
TORQUE ALL LUGNUTS
TO 140 FT-LBS
04/05/2018
1
2
3
4
5
6
7
8
9
10
11
12
13
14
15
16
17
18
19
20
21
22
23
24
25
26

# CONSOLE AND REAR DECALS

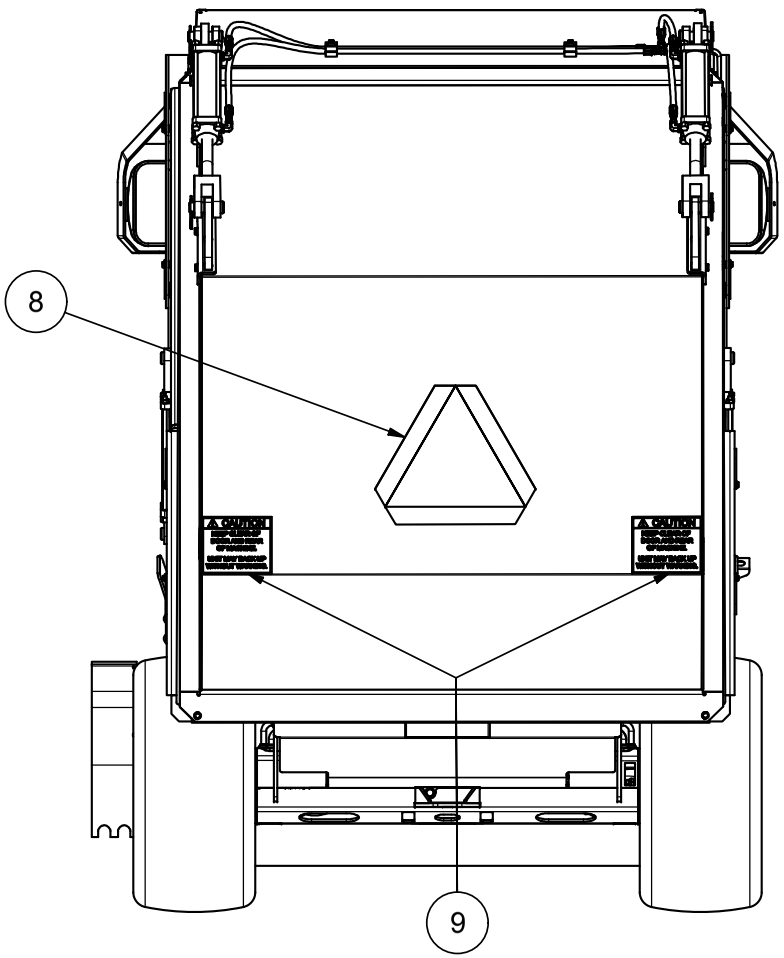


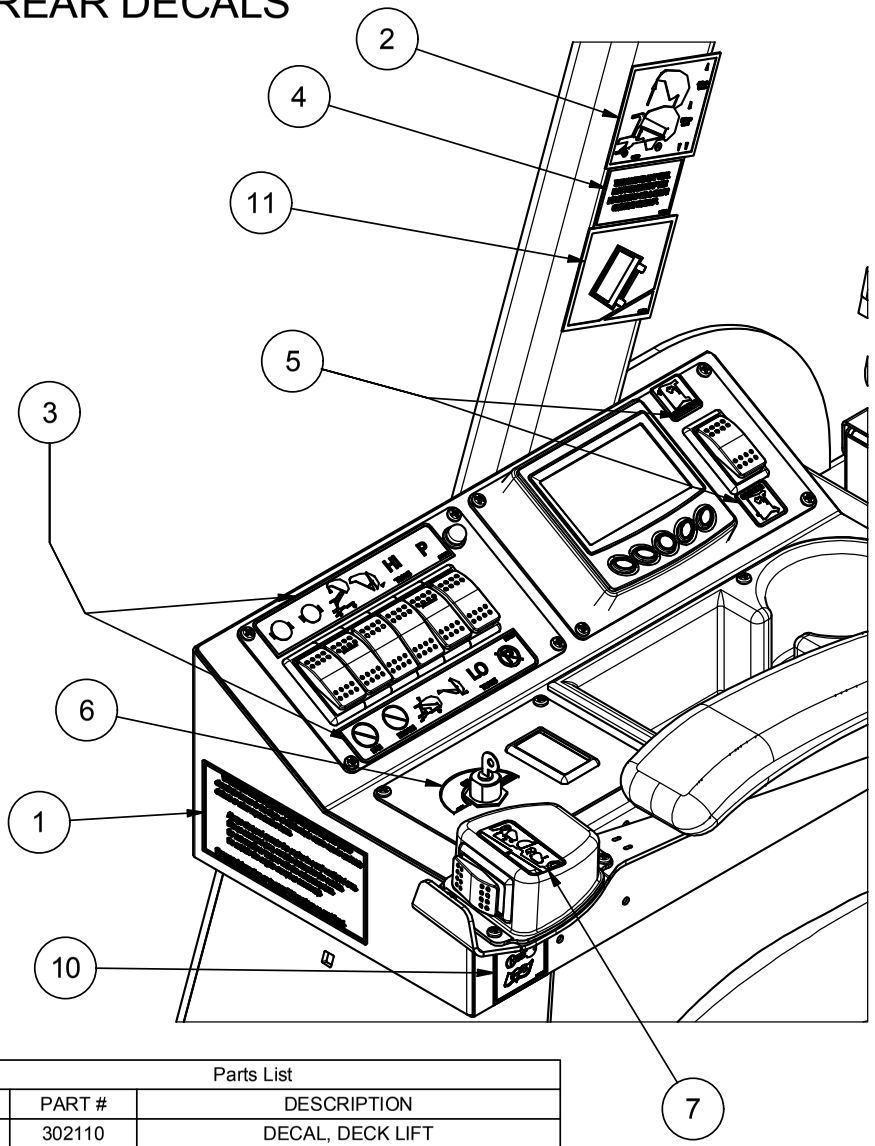


| Parts List | | | Parts List | | |
|---|---|---|---|---|---|
| ITEM | PART # | DESCRIPTION | ITEM | PART # | DESCRIPTION |
| 1 | 202133 | Decal, Prop 65, Diesel | 7 | 302110 | DECAL, DECK LIFT |
| 2 | 302027 | DECAL, OVERHEAD CLEARANCE | 8 | 500079 | SIGN - SMV |
| 3 | 302031 | DECAL, SWITCHES | 9 | 902075 | DECAL, KEEP CLEAR |
| 4 | 302075 | DECAL, HOPPER LIFT | 10 | 902149 | DECAL, READ OPERATORS MANUAL. |
| 5 | 302088 | DECAL, COOLING FAN REVERSE ROTATION | 11 | 902153 | DECAL, ROLLOVER |
| 6 | 302097 | Decal, Ignition | | | |

09/17/2018

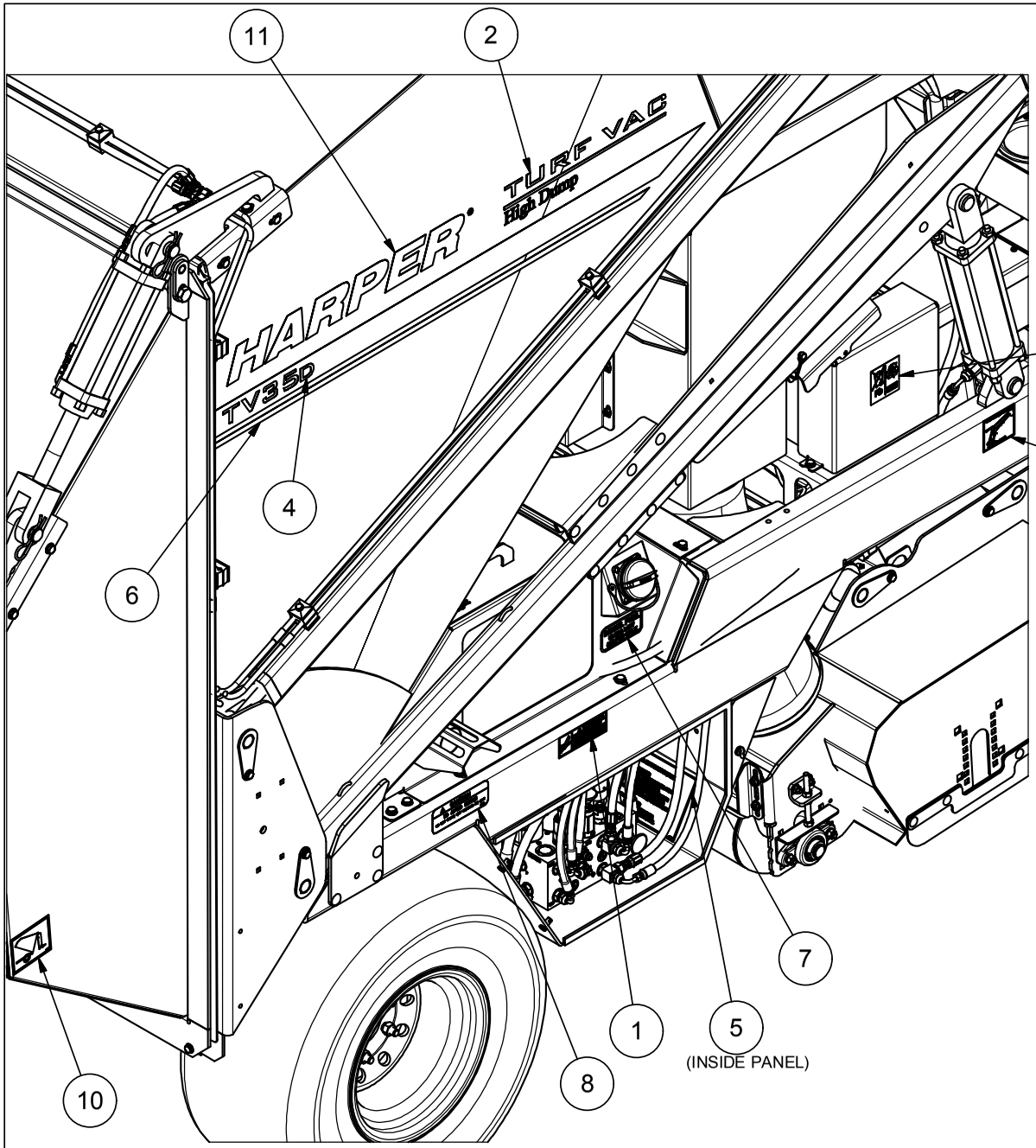


# RIGHT SIDE DECALS

| Parts List | | |
|---|---|---|
| ITEM | PART # | DESCRIPTION |
| 1 | 160006 | DECAL, WARNING HIGH PRESSURE |
| 2 | 302024 | DECAL, TURF VAC HIGH DUMP |
| 3 | 302032 | DECAL, SAFETY LATCH |
| 4 | 302085 | DECAL, "D" ADD ON FOR STRIPE |
| 5 | 302095 | DECAL, HOPPER LIFT INSTRUCTIONS |
| 6 | 302100 | DECAL, STRIPE RIGHT TV30 |
| 7 | 302106 | DECAL, DIESEL FUEL |
| 8 | 500257 | DECAL, HOT MUFFLER |
| 9 | 800195 | DECAL, RECYCLE BATTERY |
| 10 | 902151 | DECAL, DOOR SAFETY LOCK |
| 11 | 902195 | DECAL, HARPER 2.87 X 24.00, BLACK GLOSS |

04/06/2018

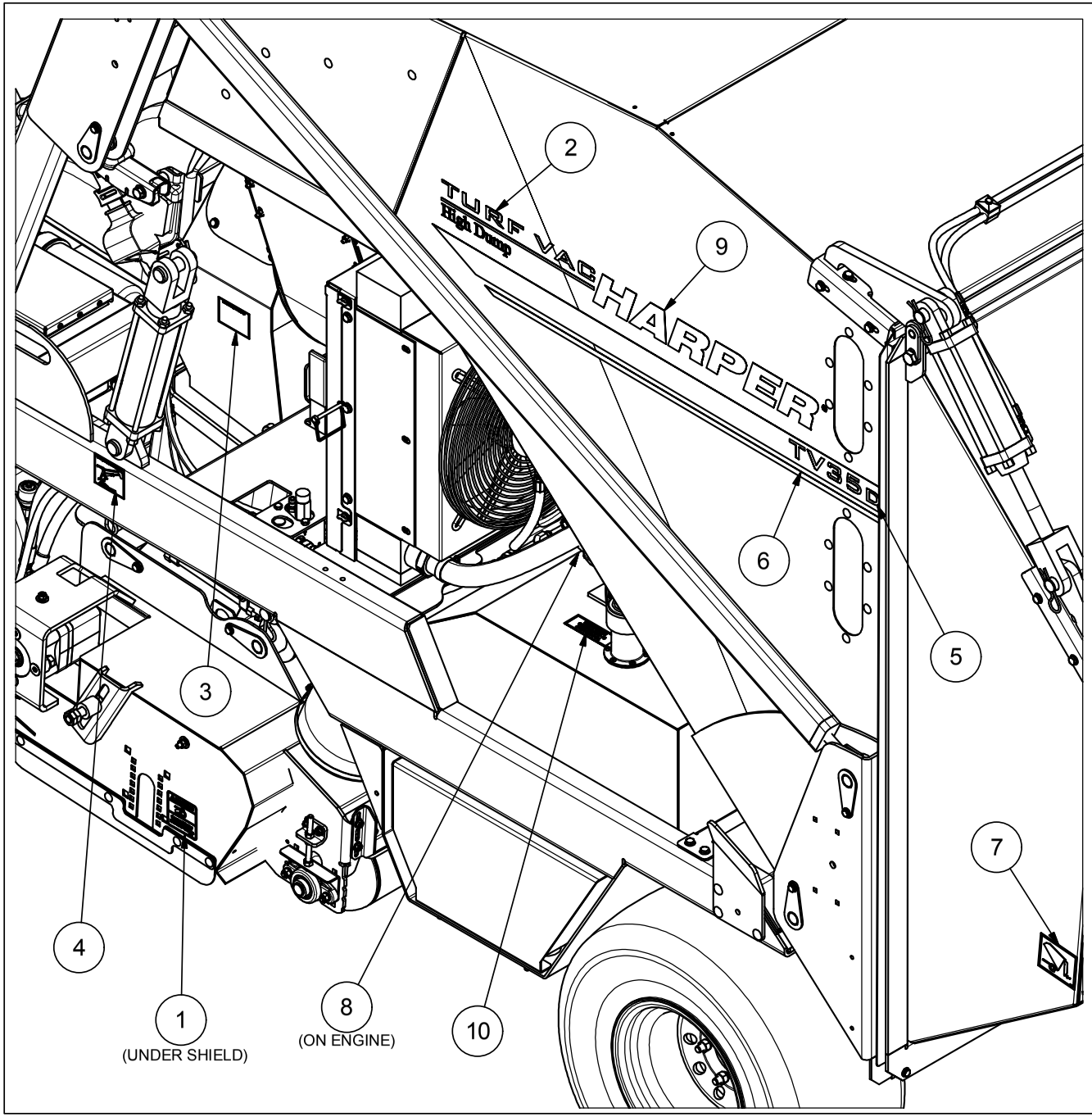


# LEFT SIDE DECALS

| Parts List | | |
|---|---|---|
| ITEM | PART # | DESCRIPTION |
| 1 | 160002 | Decal, Guard Removed, Graphic |
| 2 | 302024 | DECAL, TURF VAC HIGH DUMP |
| 3 | 302028 | DECAL, CHECK LINER |
| 4 | 302032 | DECAL, SAFETY LATCH |
| 5 | 302085 | DECAL, "D" ADD ON FOR STRIPE |
| 6 | 302101 | DECAL, STRIPE LEFT TV30 |
| 7 | 902151 | DECAL, DOOR SAFETY LOCK |
| 8 | 902186 | DECAL, EPA STANDARDS |
| 9 | 902195 | DECAL, HARPER 2.87 X 24.00, BLACK GLOSS |
| 10 | 902204 | DECAL, ISO 46 HYDRAULIC OIL |

04/06/2018

# HYDRAULIC RESERVOIR ASSEMBLY

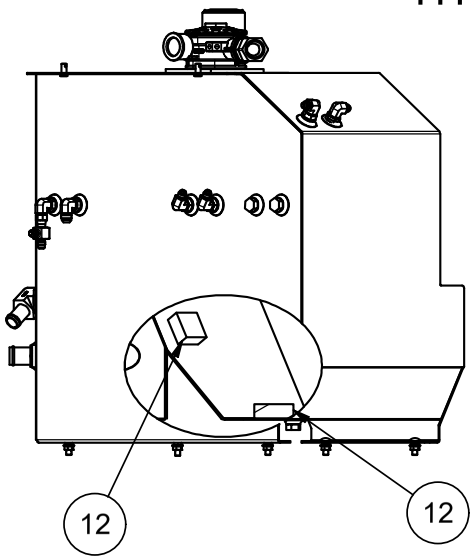


INSTALLATION INSTRUCTIONS:
APPLY RTV SEALANT TO
GASKETS & BOLT THREADS
ON FILL NECK ASSEMBLY

| 723014 Service Parts | |
|---|---|
| PART | DESCRIPTION |
| 802041 | O-Ring, Cap |
| 822002 | Filter, Replacement |
| 822017 | Gauge, Oil Filter |
| 822029 | Gasket, Return Oil Filter |

INSTALLATION INSTRUCTIONS:
APPLY RTV SEALANT TO
GASKETS & BOLT THREADS
ON FILTER ASSEMBLY

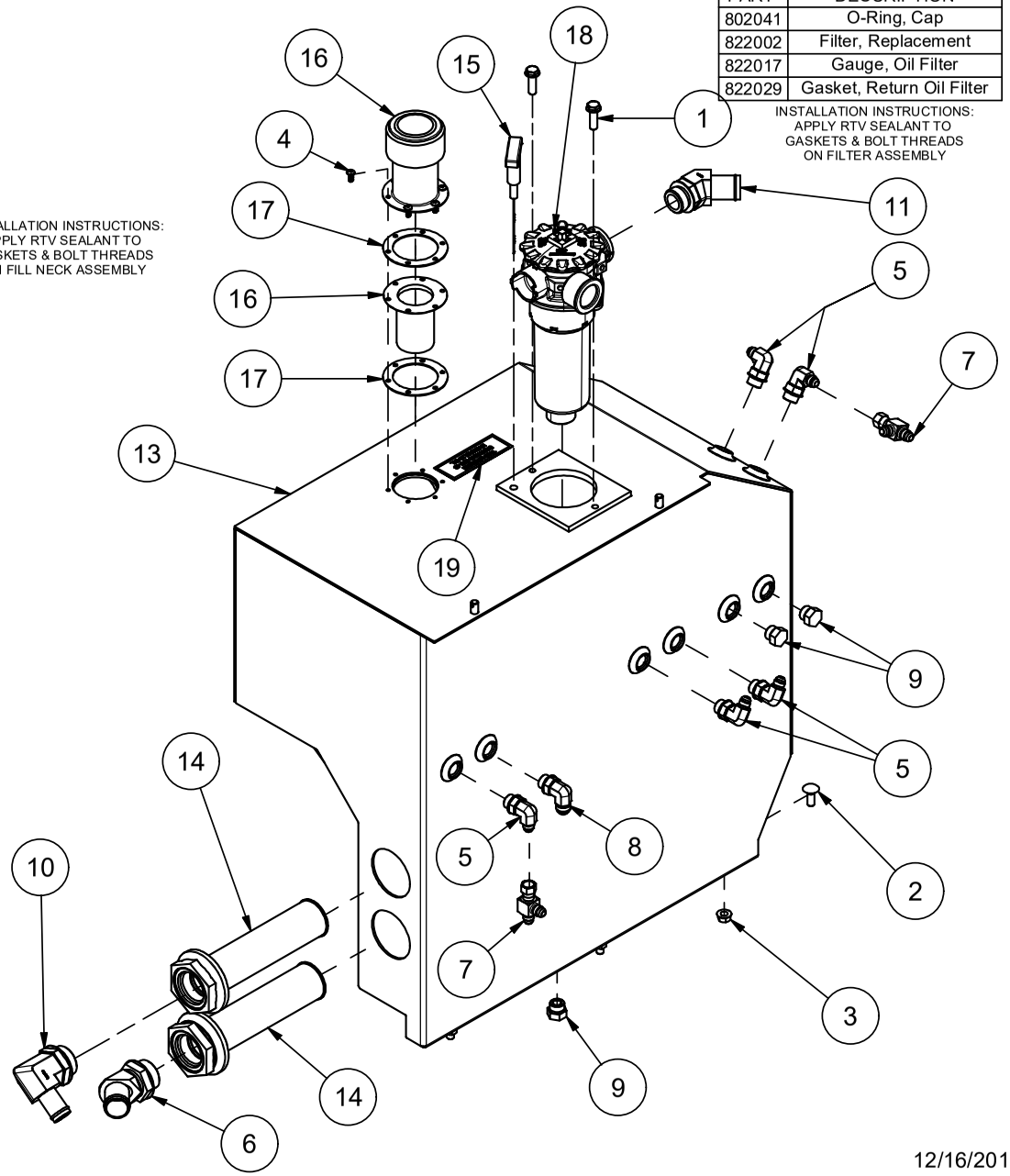


| Parts List | | |
|---|---|---|
| ITEM | PART # | DESCRIPTION |
| 1 | 110161 | BOLT, 3/8-16 X 1.25, WIZ FLANGE |
| 2 | 110556 | Bolt, 3/8-16 X 1 in Carriage |
| 3 | 110645 | NUT, 3/8-16 WIZ FLANGE |
| 4 | 112053 | SCREW, 10-32 X 1/2 MACH SEAL |
| 5 | 120134 | ADAPTER, 6MJ-8MB90 |
| 6 | 120189 | ADAPTER, 20BH-20MB 45° |
| 7 | 120216 | ADAPTER, 6MJ-6FJX-6MJ |
| 8 | 120288 | ADAPTER, 8MJ-8MB90 |
| 9 | 120372 | PLUG, O-RING -8, EXTERNAL HEX |
| 10 | 120659 | ADAPTER, 16HB-20MB90 |
| 11 | 120677 | ADAPTER, 20BH-16MB45 |
| 12 | 312025 | MAGNET, 2"x2"x1" RECT 15LB |
| 13 | 315278 | WELDMENT, HYDRAULIC TANK, TV35 |
| 14 | 322012 | STRAINER, SUCTION, SAE-32/-20, 25 GPM |
| 15 | 322025 | DIP STICK - TV30, HYDRAULIC TANK |
| 16 | 322073 | FILL NECK |
| 17 | 722076 | Seal, Buna Rubber, Pressurized Fill |
| 18 | 723014 | FILTER ASSY |
| 19 | 902204 | DECAL, ISO 46 HYDRAULIC OIL |

12/16/2019

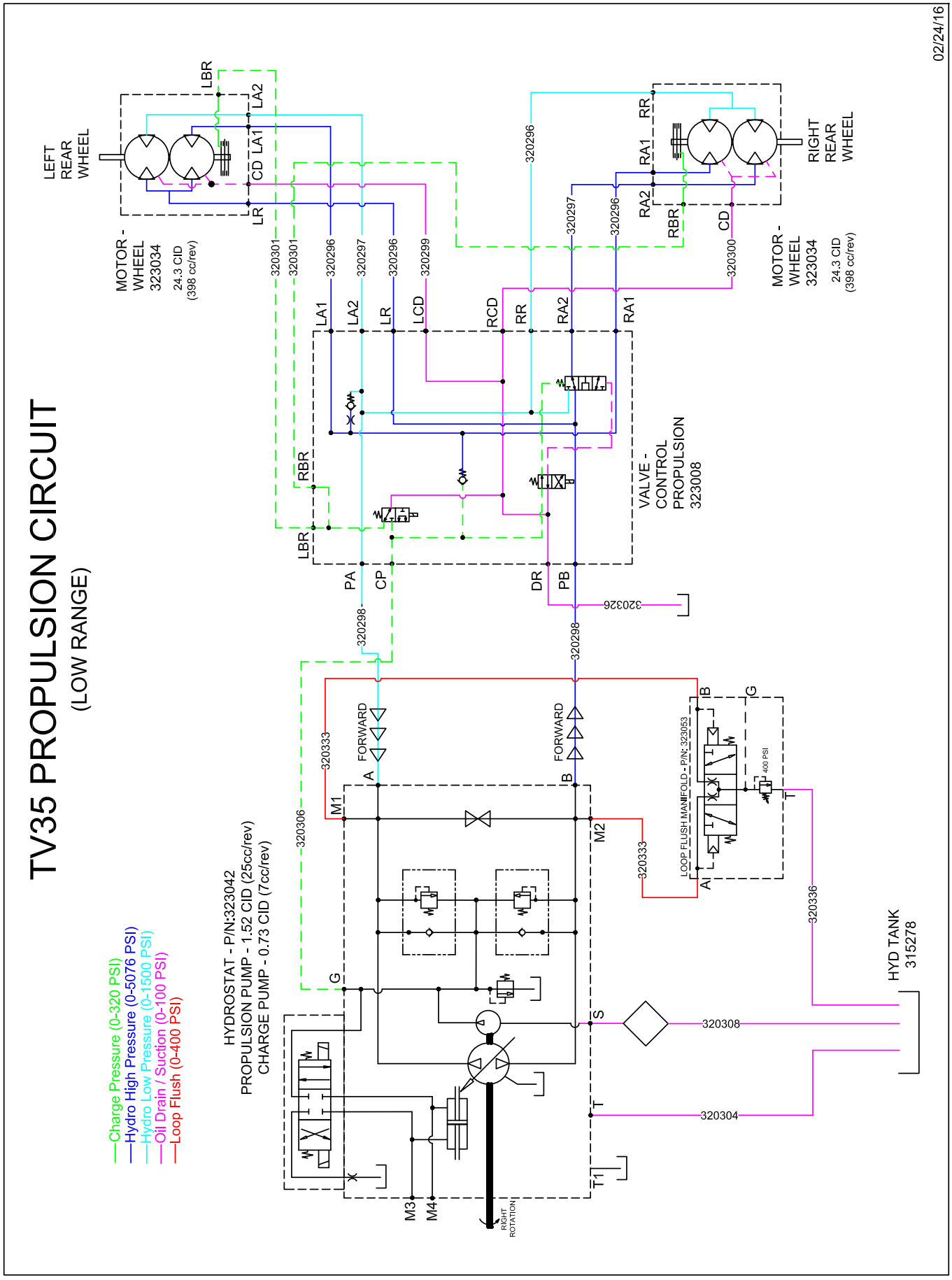
TV35 PROPULSION CIRCUIT
(LOW RANGE)
02/24/16
Charge Pressure (0-320 PSI)
Hydro High Pressure (0-5076 PSI)
Hydro Low Pressure (0-1500 PSI)
Oil Drain / Suction (0-100 PSI)
Loop Flush (0-400 PSI)
HYDROSTAT - P/N:323042
PROPULSION PUMP - 1.52 CID (25cc/rev)
CHARGE PUMP - 0.73 CID (7cc/rev)
LEFT REAR WHEEL
MOTOR - WHEEL 323034
24.3 CID (398 cc/rev)
RIGHT REAR WHEEL
VALVE - CONTROL PROPULSION 323008
LOOP FLUSH MANIFOLD - P/N: 323053
400 PSI
HYD TANK 315278
FORWARD
RIGHT ROTATION
320296
320297
320298
320299
320300
320301
320303
320304
320306
320308
320326
320333
320336

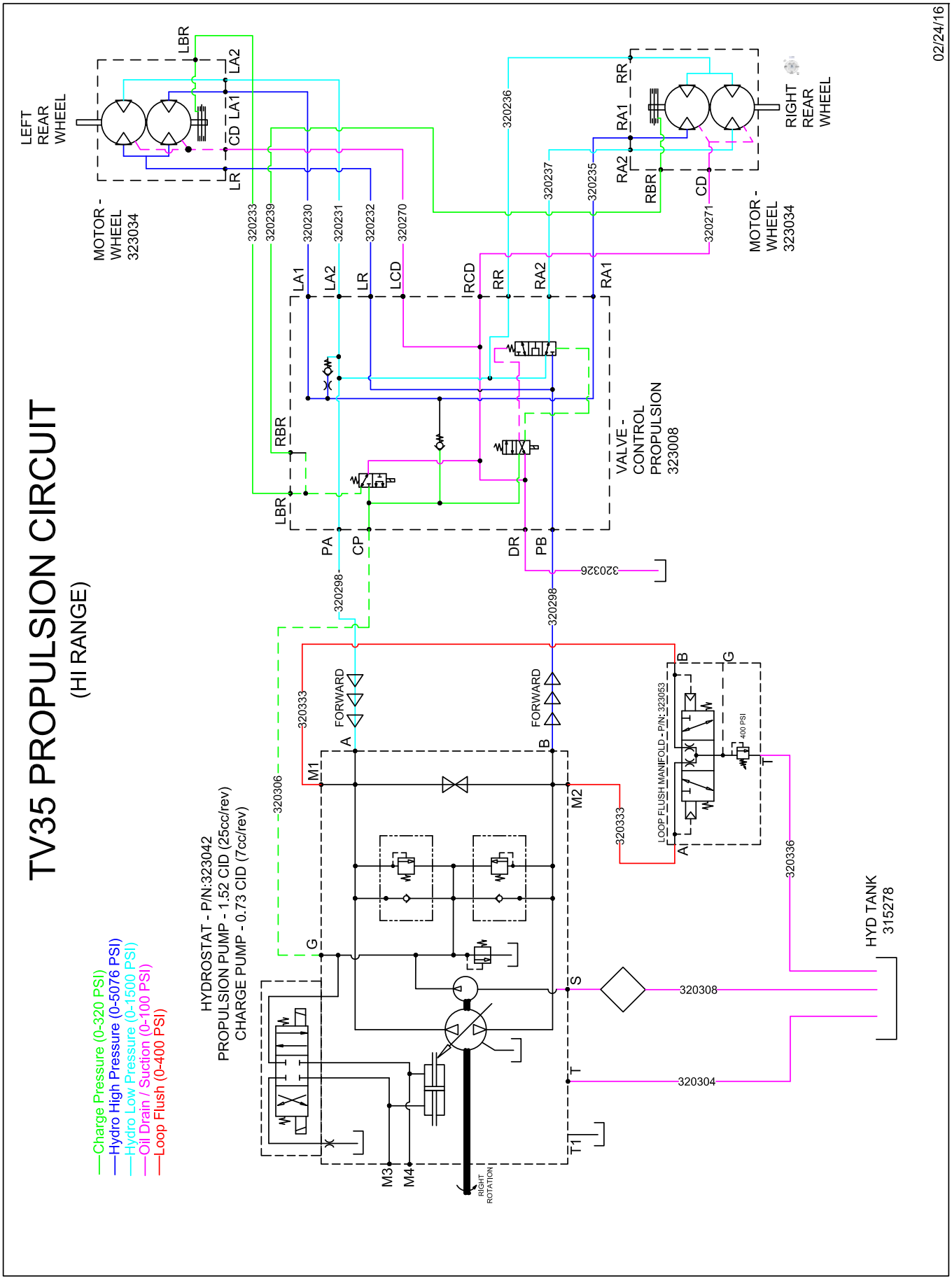
TV35 PROPULSION CIRCUIT
(HI RANGE)
02/24/16
Charge Pressure (0-320 PSI)
Hydro High Pressure (0-5076 PSI)
Hydro Low Pressure (0-1500 PSI)
Oil Drain / Suction (0-100 PSI)
Loop Flush (0-400 PSI)
HYDROSTAT - P/N:323042
PROPULSION PUMP - 1.52 CID (25cc/rev)
CHARGE PUMP - 0.73 CID (7cc/rev)
LEFT REAR WHEEL
MOTOR - WHEEL 323034
RIGHT REAR WHEEL
MOTOR - WHEEL 323034
VALVE - CONTROL PROPULSION 323008
LOOP FLUSH MANIFOLD - P/N: 323053
400 PSI
HYD TANK 315278
FORWARD
RIGHT ROTATION
320233
320239
320230
320231
320232
320270
320236
320237
320235
320271
320298
320326
320333
320306
320308
320304
320336

# Propulsion System

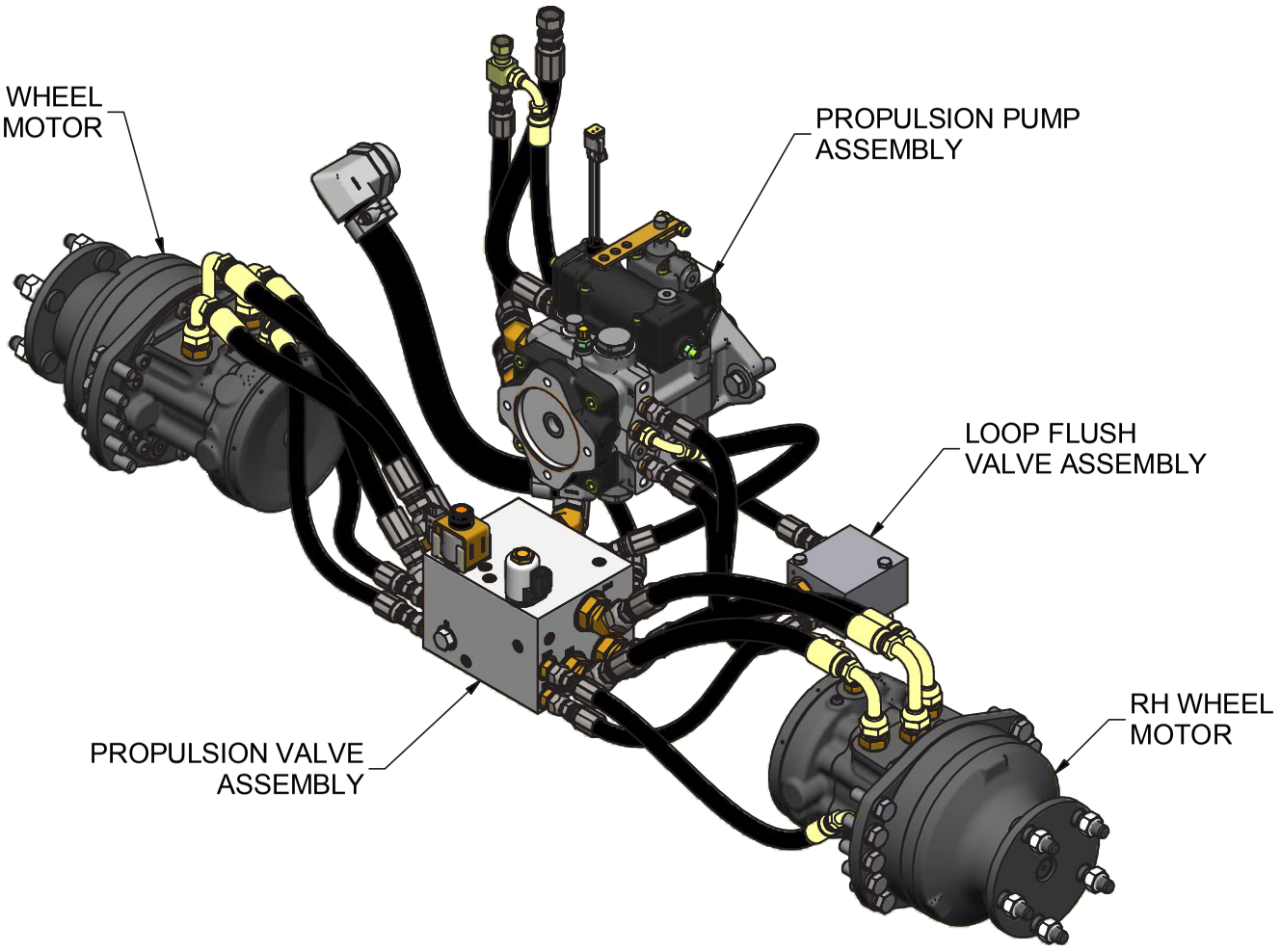


Hoses From Kit: 323052

11/5/2019

# Propulsion Pump Assembly

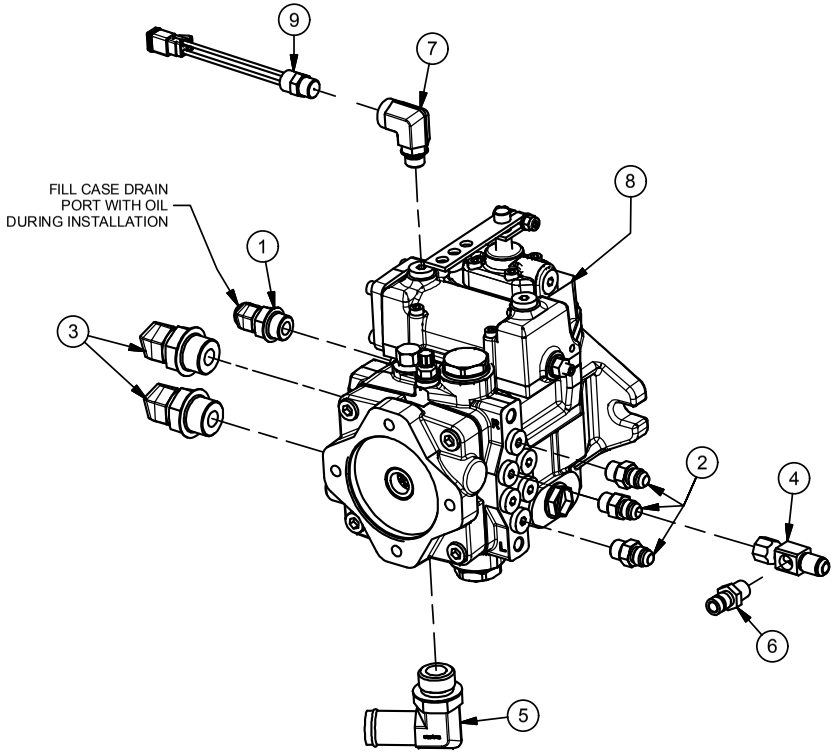


| Parts List | | |
|---|---|---|
| ITEM | PART # | DESCRIPTION |
| 1 | 120185 | ADAPTER, 8MB-8MJ45 |
| 2 | 120319 | ADAPTER, 6MJ-6MB |
| 3 | 120410 | ADAPTER, 10MJ-12MB45 |
| 4 | 120483 | FITTING, GAGEPORT 6MJ-6FJX-4FP |
| 5 | 120491 | ADAPTER, 16BH-12MB90 |
| 6 | 120521 | FITTING - TEST PORT |
| 7 | 120689 | Adapter, 6MB90-6FB |
| 8 | 323042 | Propulsion Pump, Mech Servo Control, 25cc/12cc |
| 9 | 335003 | Switch Assy, Hi-Reverse Lockout Pressure 100 PSI |

# Wheel Motor Assembly

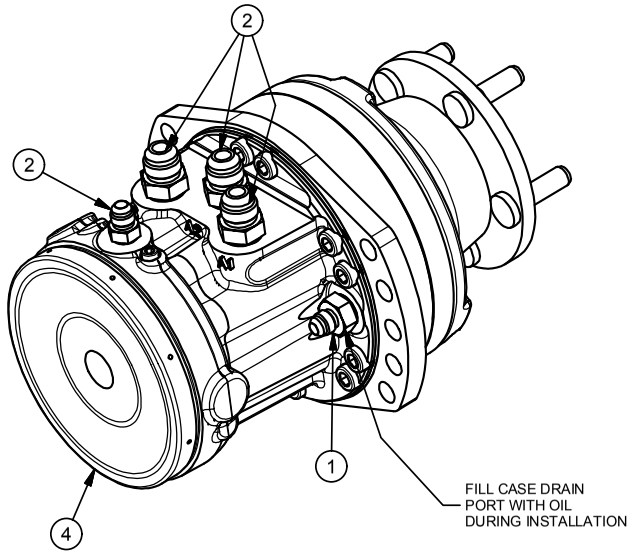


| 323034 - SERVICE PARTS | | |
|---|---|---|
| PART # | QTY | DESCRIPTION |
| 311013 | 5 | STUD, WHEEL MOTOR |
| 322072 | 1 | SEAL KIT, WHEEL MOTOR |

| Parts List | | |
|---|---|---|
| ITEM | PART # | DESCRIPTION |
| 1 | 120239 | ADAPTER, 6MJ-8MB |
| 2 | 120251 | ADAPTER, 10MJ-10MB |
| 2 | 120319 | ADAPTER, 6MJ-6MB |
| 4 | 323034 | MOTOR, POCLAIN HYD WHEEL |

12/19/2016

# Propulsion Valve Assembly

| Parts List | | |
|---|---|---|
| ITEM | PART # | DESCRIPTION |
| 1 | 110437 | BOLT, 3/8-16 X 0.75, WIZ FLANGE |
| 2 | 120219 | ADAPTER, 6MJ-6MB 45 |
| 3 | 120319 | ADAPTER, 6MJ-6MB |
| 4 | 120410 | ADAPTER, 10MJ-12MB45 |
| 5 | 323008 | VALVE, TV30 PROPULSION CONTROL |

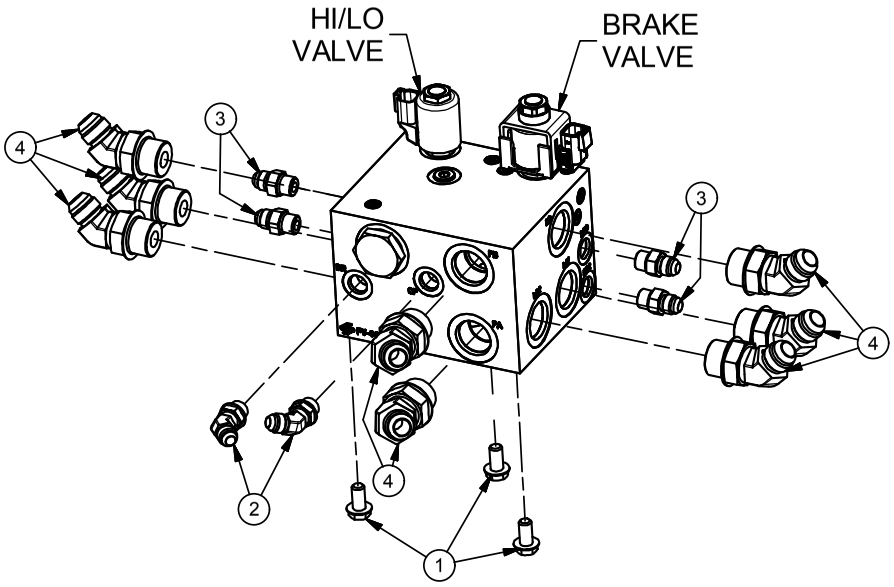


| 323008 - SERVICE PARTS | |
|---|---|
| PART # | DESCRIPTION |
| 522119 | 3-POS 4-WAY SOLENOID VALVE (HI/LO) |
| 322053 | 12VDC DEUTSCH COIL S SERIES (HI/LO) |
| 322054 | 2-POS 3-WAY SOLENOID VALVE (BRAKE) |
| 322052 | 12VDC DEUTSCH COIL (BRAKE) |

# Loop Flush Valve Assembly

| Parts List | | |
|---|---|---|
| ITEM | PART # | DESCRIPTION |
| 1 | 120239 | ADAPTER, 6MJ-8MB |
| 2 | 323053 | VALVE, LOOP FLUSH |

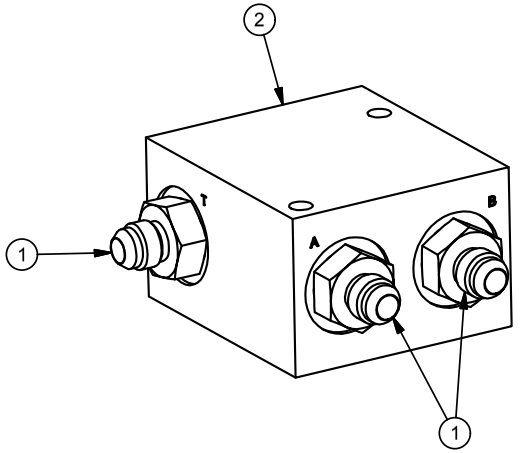


2/23/2016

# Propulsion Pump Plumbing

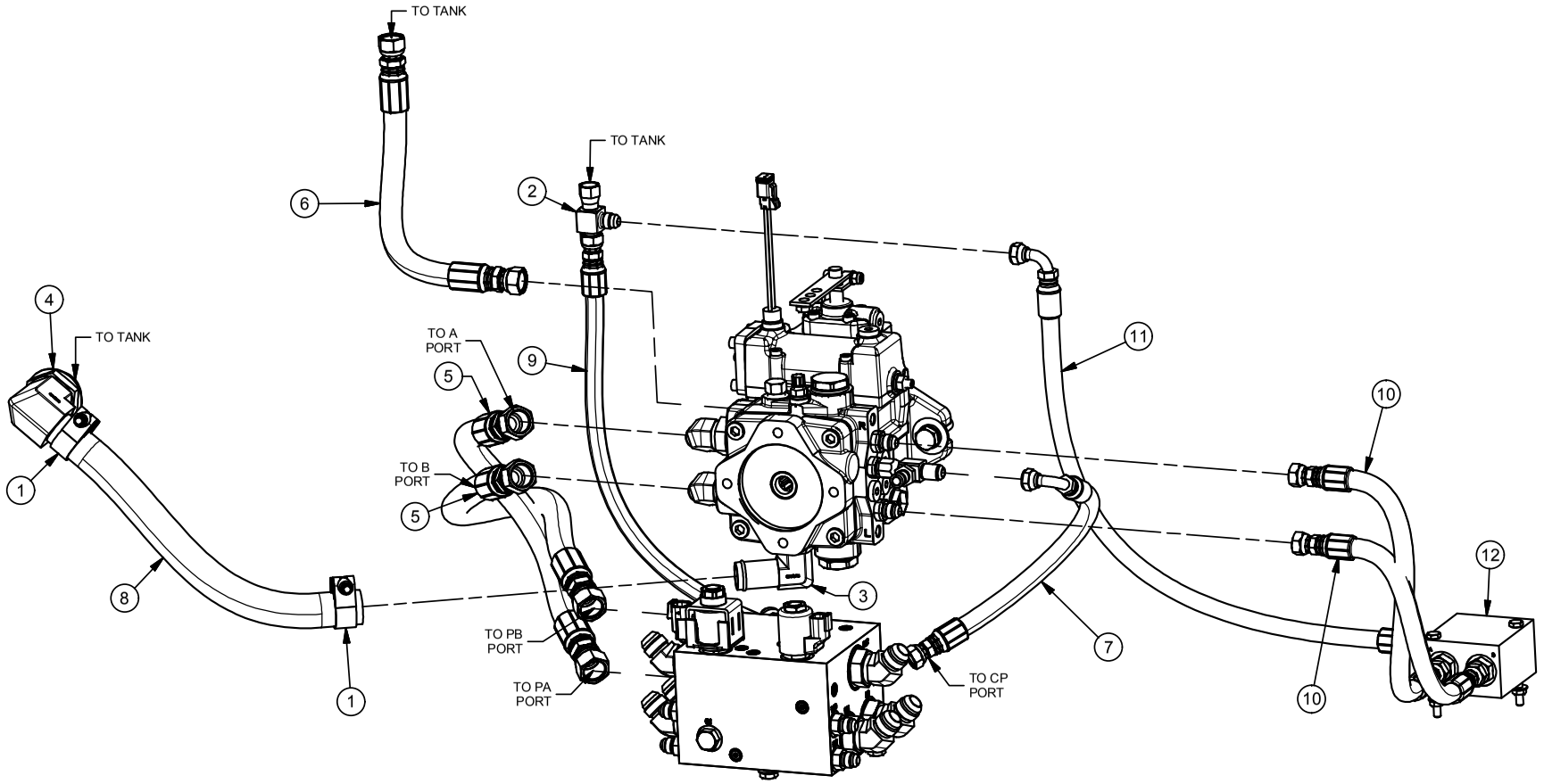


| Parts List | | | Parts List | | |
|---|---|---|---|---|---|
| ITEM | PART # | DESCRIPTION | ITEM | PART # | DESCRIPTION |
| 1 | 112044 | CLAMP, 1.5", T-BOLT | 7 | 320306 | HOSE ASSY, PROPULSION BRAKE / CP |
| 2 | 120216 | ADAPTER, 6MJ-6FJX-6MJ | 8 | 320308 | HOSE, PROPULSION SUCTION |
| 3 | 120491 | ADAPTER, 16BH-12MB90 | 9 | 320326 | HOSE ASSY, PROP VALVE TO TANK |
| 4 | 120659 | ADAPTER, 16HB-20MB90 | 10 | 320333 | HOSE ASSY, LOOP FLUSH |
| 5 | 320298 | HOSE ASSY, PROP PUMP PRESS - PA,PB | 11 | 320336 | HOSE ASSY, LOOP FLUSH TO TANK |
| 6 | 320304 | HOSE ASSY, PROP PUMP TO TANK | 12 | 323053 | VALVE, LOOP FLUSH |

2/24/2016

# Wheel Motor Plumbing

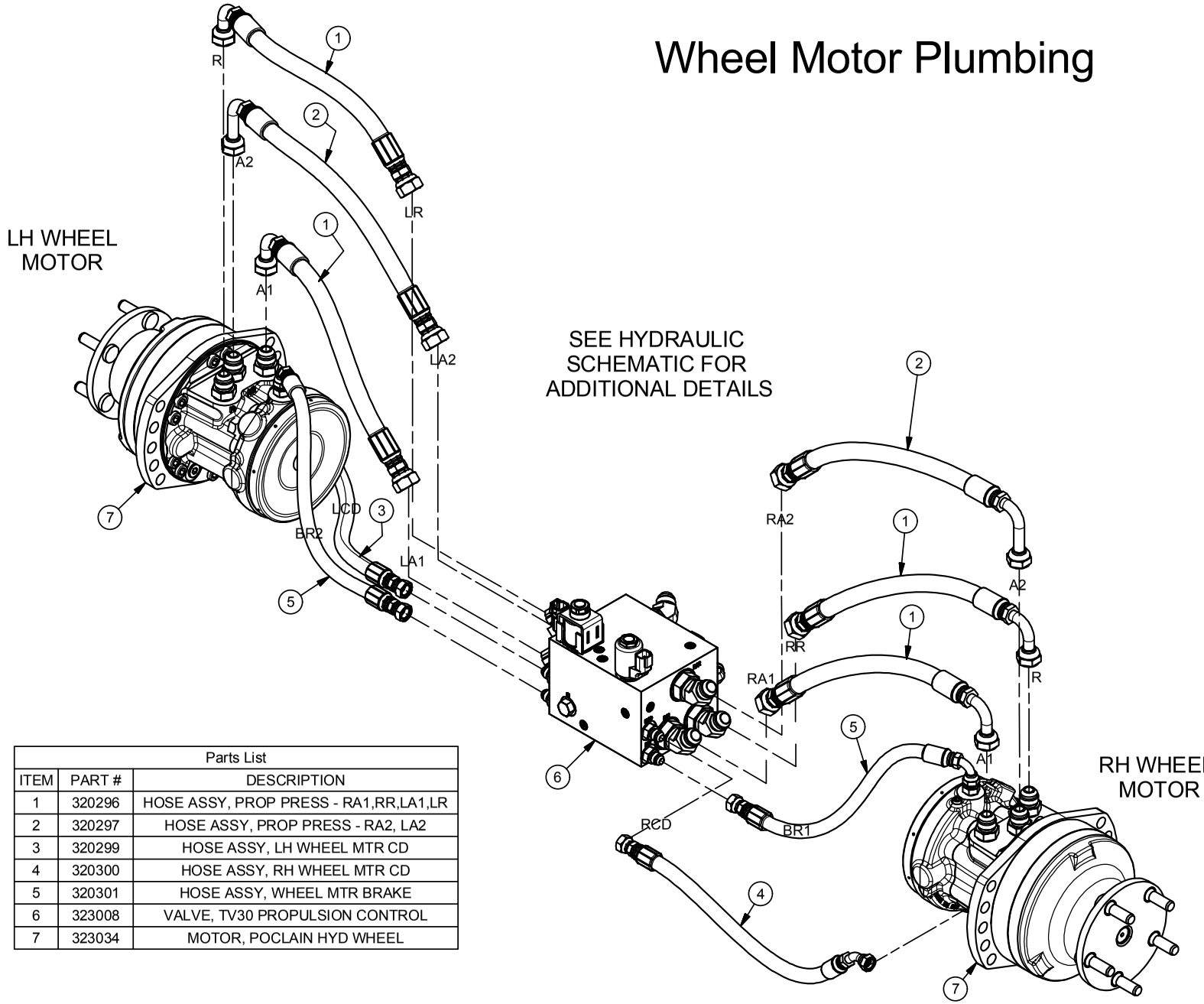


| Parts List | | |
|---|---|---|
| ITEM | PART # | DESCRIPTION |
| 1 | 320296 | HOSE ASSY, PROP PRESS - RA1,RR,LA1,LR |
| 2 | 320297 | HOSE ASSY, PROP PRESS - RA2, LA2 |
| 3 | 320299 | HOSE ASSY, LH WHEEL MTR CD |
| 4 | 320300 | HOSE ASSY, RH WHEEL MTR CD |
| 5 | 320301 | HOSE ASSY, WHEEL MTR BRAKE |
| 6 | 323008 | VALVE, TV30 PROPULSION CONTROL |
| 7 | 323034 | MOTOR, POCLAIN HYD WHEEL |

2/24/2016

# Machine System

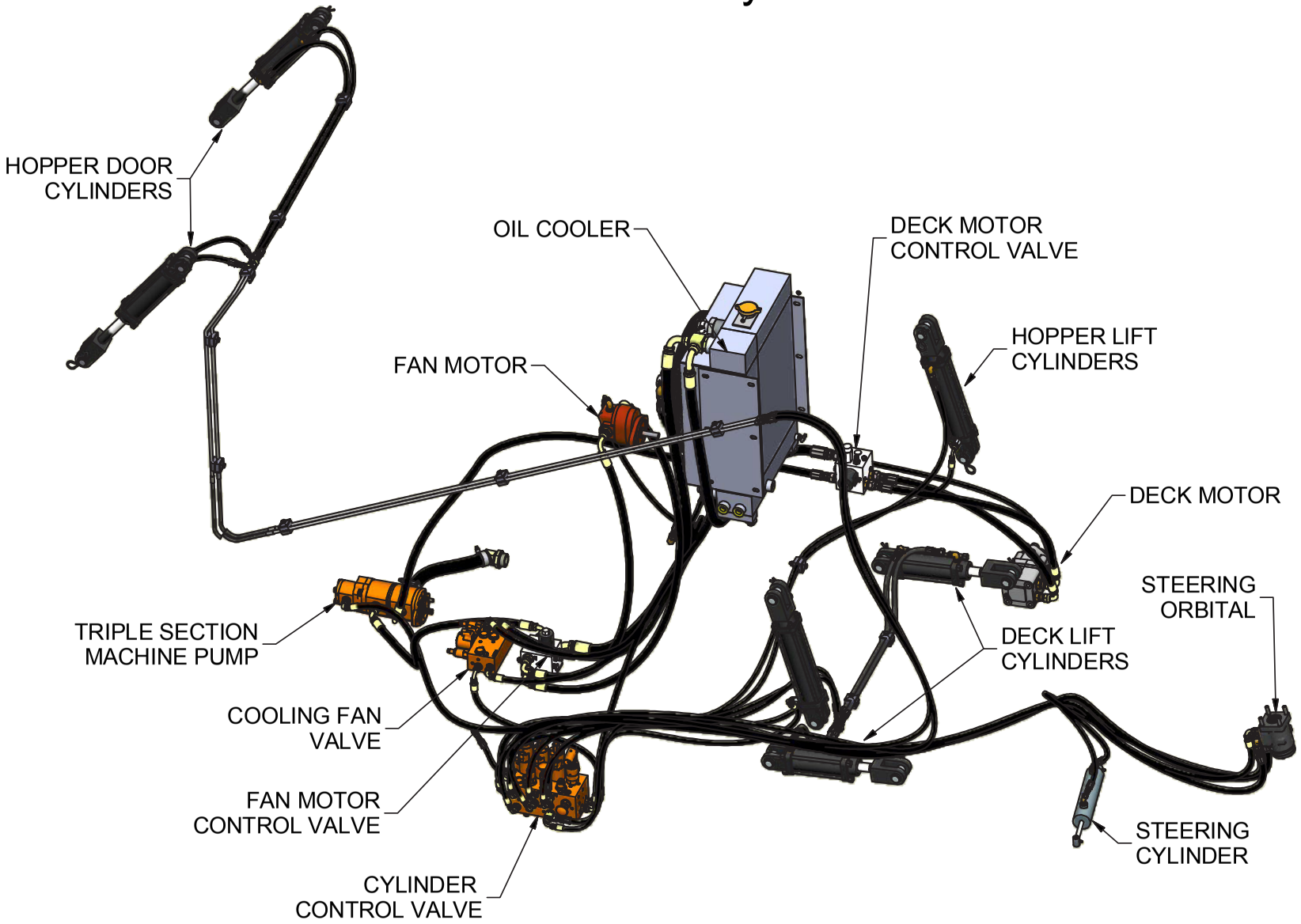


Hoses From Kit: 323052

11/5/2019

# TV35 MACHINE CIRCUITS ( DECK & FAN DRIVES, CYLINDER FUNCTIONS)

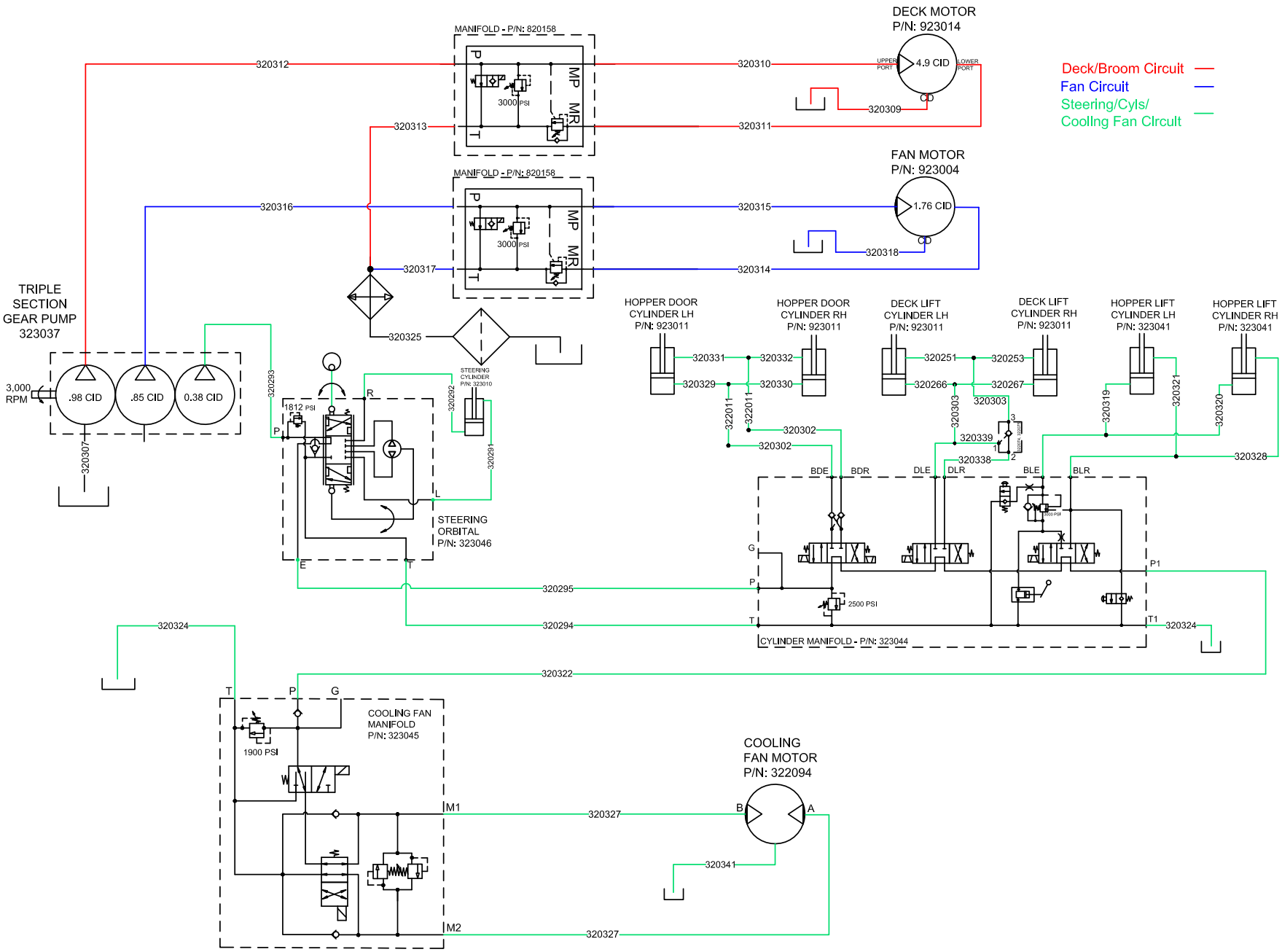




4/25/18

# Triple Section Machine Pump Assembly

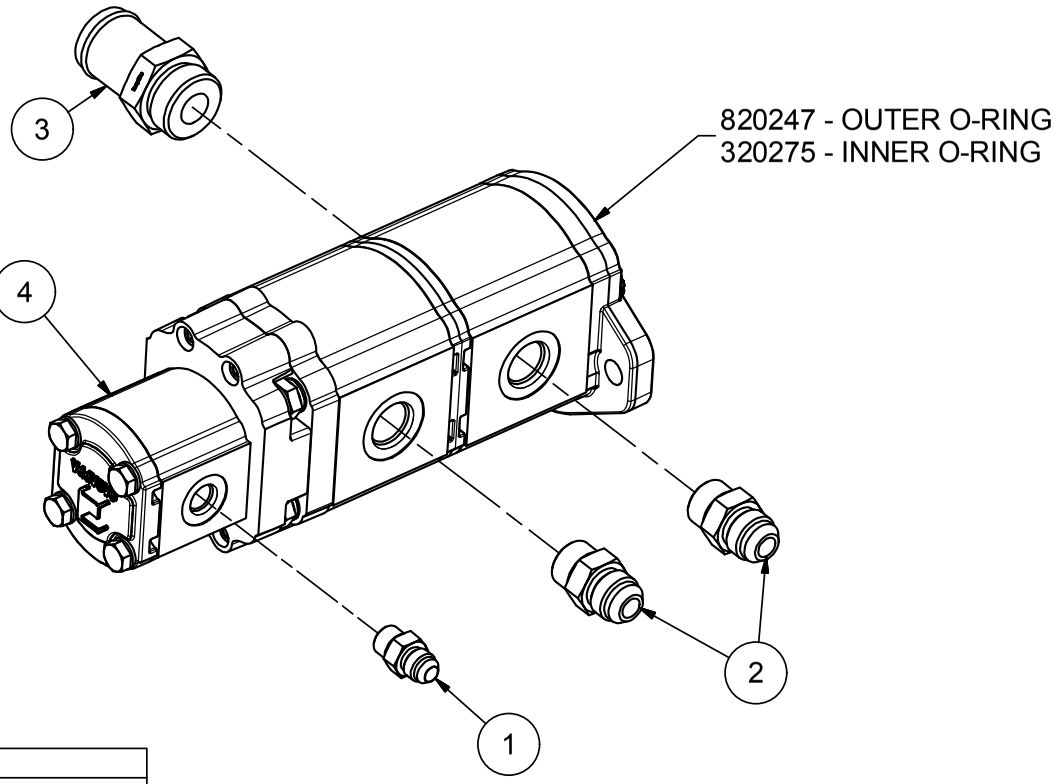


| 323037 - SERVICE PARTS | |
|---|---|
| PART # | DESCRIPTION |
| 325007 | SEAL KIT, TRIPLE SECTION PUMP |

| Parts List | | |
|---|---|---|
| ITEM | PART # | DESCRIPTION |
| 1 | 120319 | ADAPTER, 6MJ-6MB |
| 2 | 120251 | ADAPTER, 10MJ-10MB |
| 3 | 120373 | ADAPTER, 20BH-16MB |
| 4 | 323037 | PUMP, TRIPLE SECTION (16.8, 14.5, 5.8 cc) |

2/24/2016

# Triple Section Pump Plumbing

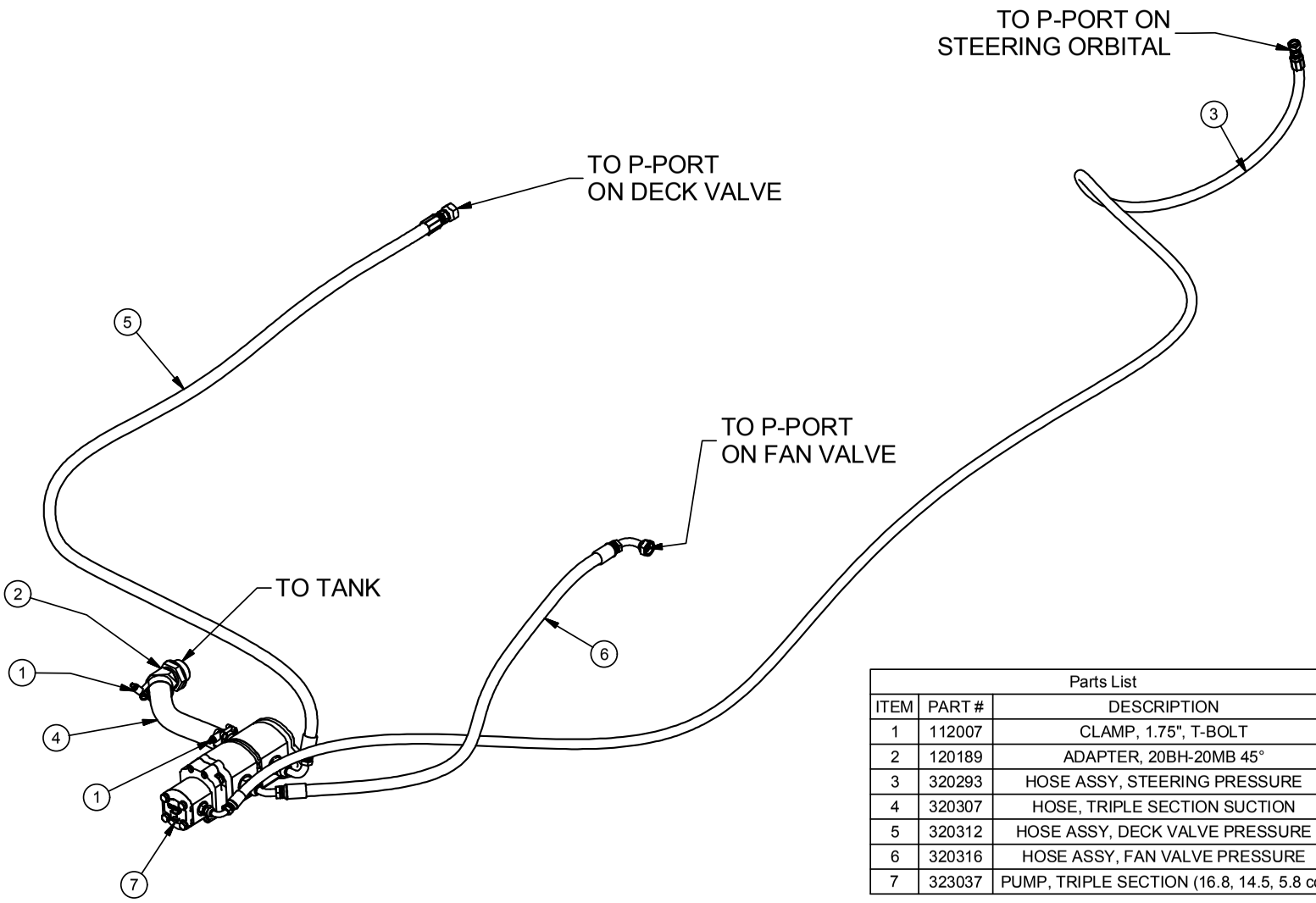


| Parts List | | |
|---|---|---|
| ITEM | PART # | DESCRIPTION |
| 1 | 112007 | CLAMP, 1.75", T-BOLT |
| 2 | 120189 | ADAPTER, 20BH-20MB 45° |
| 3 | 320293 | HOSE ASSY, STEERING PRESSURE |
| 4 | 320307 | HOSE, TRIPLE SECTION SUCTION |
| 5 | 320312 | HOSE ASSY, DECK VALVE PRESSURE |
| 6 | 320316 | HOSE ASSY, FAN VALVE PRESSURE |
| 7 | 323037 | PUMP, TRIPLE SECTION (16.8, 14.5, 5.8 cc) |

2/24/2016

# Deck Plumbing

| Parts List | | |
|---|---|---|
| ITEM | PART # | DESCRIPTION |
| 1 | 110290 | NUT, 1/4-20 WIZ FLANGE |
| 2 | 110298 | WASHER, 1/4" FLAT SAE |
| 3 | 110354 | BOLT, 1/4-20 X 2.0 HEX HEAD |
| 4 | 110474 | BOLT, 1/4-20 X 1-1/2 |
| 5 | 110529 | BOLT, 5/16-18 X 4.5 |
| 6 | 110606 | NUT, 5/16-18 WIZ FLANGE |
| 7 | 110667 | WASHER, 1/4" LOCK |
| 8 | 120134 | ADAPTER, 6MJ-8MB90 |
| 9 | 120222 | ADAPTER, 6MJ-6MB90 |
| 10 | 120241 | ADAPTER, 4MJ-4MJ-4MJ |
| 11 | 120251 | ADAPTER, 10MJ-10MB |
| 12 | 120319 | ADAPTER, 6MJ-6MB |
| 13 | 120444 | ADAPTER, 12MJ-16MB-12MJ |
| 14 | 120665 | ADAPTER, 6MJ-4MB |
| 15 | 320251 | HOSE - DECK, LEFT FRONT |
| 16 | 320253 | HOSE - DECK, RIGHT FRONT |
| 17 | 320266 | HOSE - DECK, LEFT REAR |
| 18 | 320267 | HOSE DECK, RIGHT REAR |
| 19 | 320303 | HOSE ASSY, DECK LIFT |
| 20 | 320309 | HOSE ASSY, DECK MTR CD |
| 21 | 320310 | HOSE ASSY, DECK MTR PRESSURE |
| 22 | 320311 | HOSE ASSY, DECK MTR RETURN |
| 23 | 320313 | HOSE ASSY, DECK VALVE RETURN |
| 24 | 320338 | HOSE ASSY, DLR PRESS |

| Parts List | | |
|---|---|---|
| ITEM | PART # | DESCRIPTION |
| 25 | 320339 | HOSE ASSY, DLE PILOT |
| 26 | 322074 | VALVE, PO CHECK |
| 27 | 322075 | VALVE BODY, 3-WAY SAE-6 |
| 28 | 323018 | CYLINDER - 2 x 4, SAE-6, TIE ROD |
| 29 | 323044 | VALVE, CYLINDER MANIFOLD |
| 30 | 522104 | DOUBLE HOSE CLAMP |
| 31 | 522105 | DOUBLE COVERPLATE |
| 32 | 820158 | DECK VALVE |
| 33 | 923014 | MOTOR, 4.9 CID |

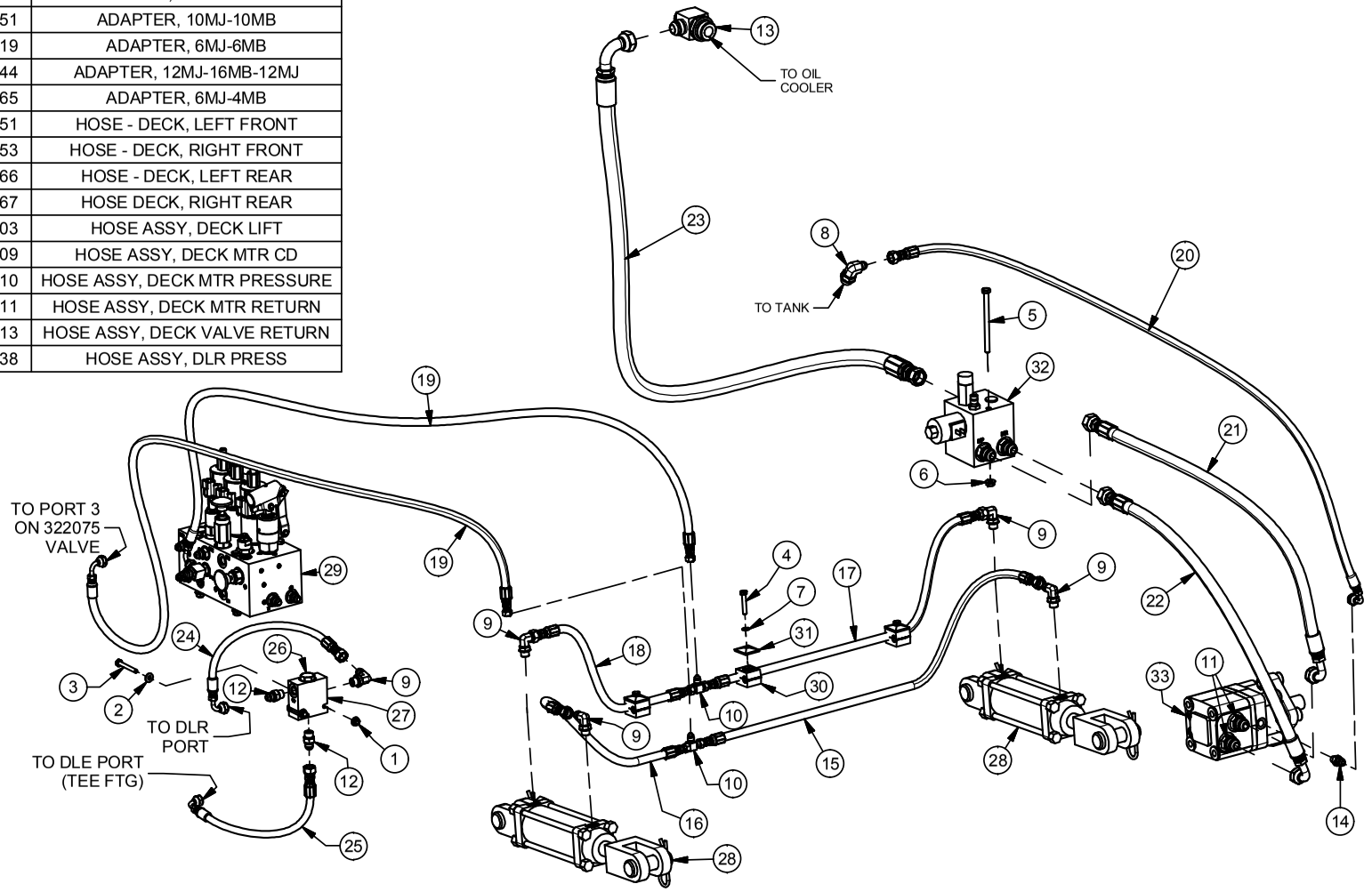


9/27/2017

# Fan Plumbing

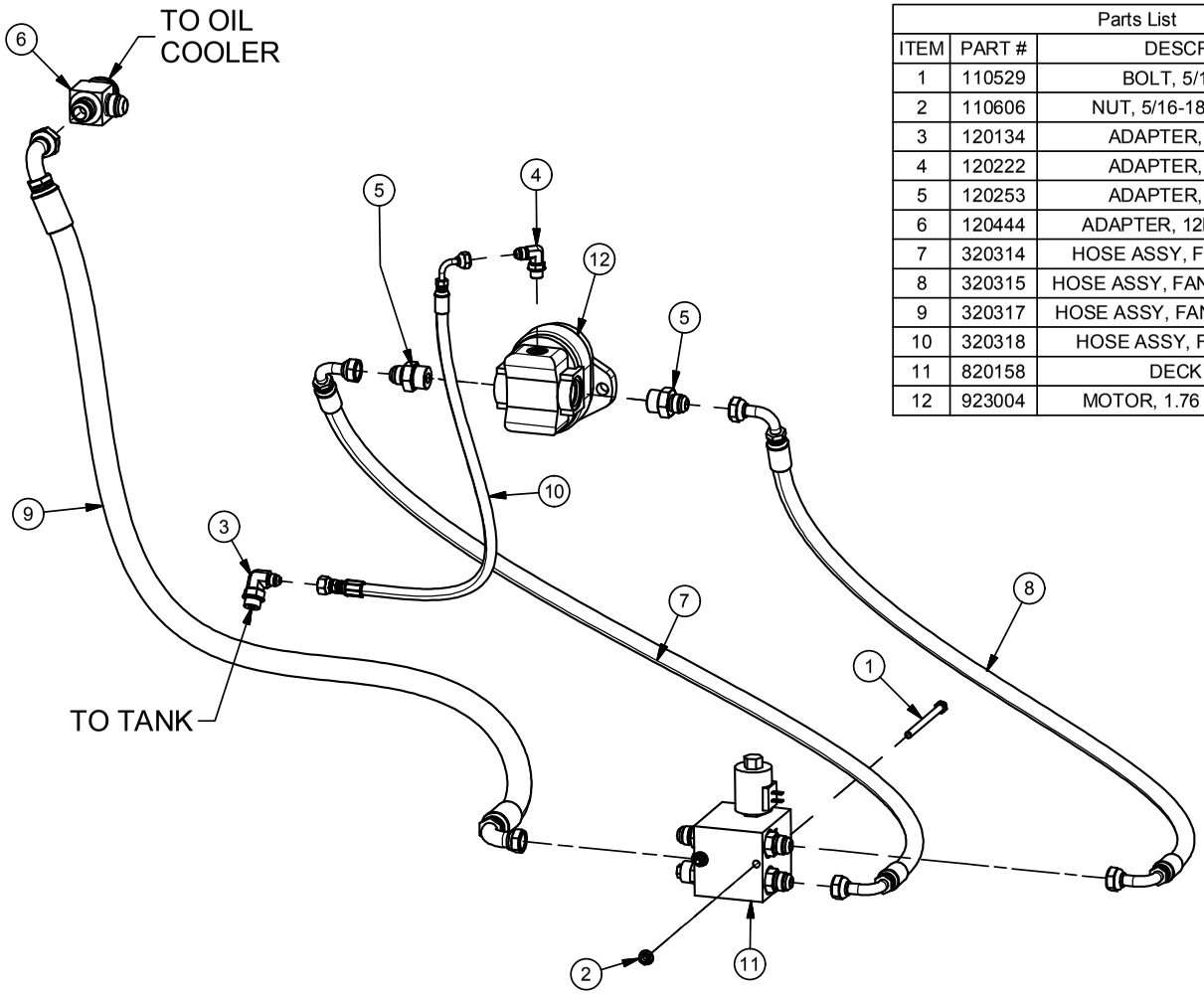


| Parts List | | |
|---|---|---|
| ITEM | PART # | DESCRIPTION |
| 1 | 110529 | BOLT, 5/16-18 X 4.5 |
| 2 | 110606 | NUT, 5/16-18 WIZ FLANGE |
| 3 | 120134 | ADAPTER, 6MJ-8MB90 |
| 4 | 120222 | ADAPTER, 6MJ-6MB90 |
| 5 | 120253 | ADAPTER, 10MJ-12MB |
| 6 | 120444 | ADAPTER, 12MJ-16MB-12MJ |
| 7 | 320314 | HOSE ASSY, FAN MTR PRESS |
| 8 | 320315 | HOSE ASSY, FAN MTR PRESSURE |
| 9 | 320317 | HOSE ASSY, FAN VAVLE RETURN |
| 10 | 320318 | HOSE ASSY, FAN MOTOR CD |
| 11 | 820158 | DECK VALVE |
| 12 | 923004 | MOTOR, 1.76 CI, FAN DRIVE |

4/15/2016

# Fan & Deck Valve Assembly

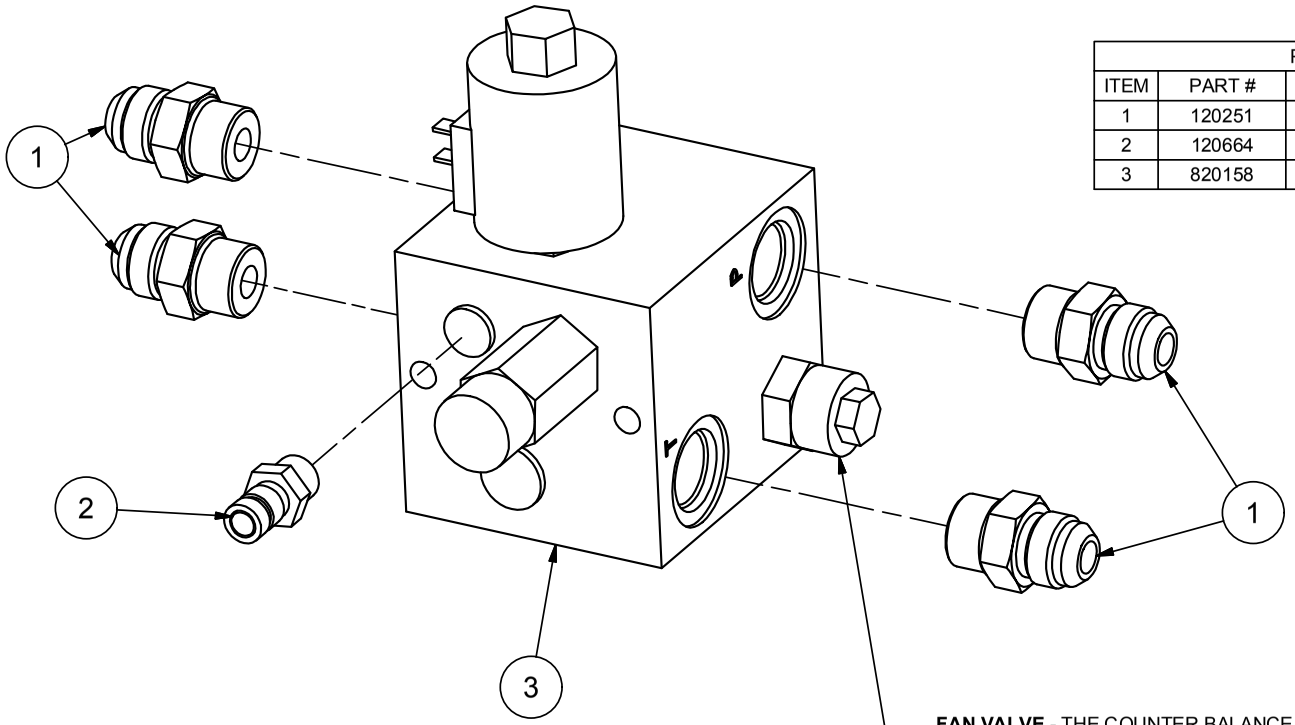


| Parts List | | |
|---|---|---|
| ITEM | PART # | DESCRIPTION |
| 1 | 120251 | ADAPTER, 10MJ-10MB |
| 2 | 120664 | Adapter, Test Port -6MB |
| 3 | 820158 | VALVE, FAN/DECK |

| 820158 - SERVICE PARTS | |
|---|---|
| PART | DESCRIPTION |
| 820229 | COIL, 12VDC DEUTSCH "ER" |
| 820230 | VALVE, COUNTER BALANCE |
| 820231 | RELIEF, 3000 PSI PRESSURE |
| 820232 | VALVE, N.O. SOLENOID CARTRIDGE |

**FAN VALVE** - THE COUNTER BALANCE VALVE WILL INTIALLY BE SET SO THAT THE IMPELLER FAN HAS APPROXIMATELY A 3-5 SECOND SPINDOWN.

**DECK VALVE** - THE DECK VALVE WILL NEED TO BE ADJUSTED AFTER THE ROTOR IS INSTALLED. INTIALLY, THE COUNTER BALANCE IS ADJUSTED ALL THE WAY OUT.

**ADJUSTING THE COUNTER BALANCE VALVE** - THE SPINDOWN FOR THE IMPELLER FAN AND THE DECK ROTOR SHOULD BOTH BE BETWEEN 3-5 SECONDS. FOR ADJUSMENT, LOOSEN THE JAM NUT AND THEN TURN THE SET SCREW ABOUT A 1/4 TURN. FOR A SLOWER SPINDOWN, LOOSEN THE SET SCREW. FOR A QUICKER SPINDOWN, TIGHTEN THE SET SCREW. REPEAT UNTIL THE SPINDOWN IS BETWEEN 3-5 SECONDS, THEN TIGHTEN JAM NUT.

10/4/2017

# Steering Plumbing

| Parts List | | |
|---|---|---|
| ITEM | PART # | DESCRIPTION |
| 1 | 111055 | STUD, M10 X 1.5 X 42 GRADE 8.8 |
| 2 | 120027 | ADAPTER, 4MB-4MJ 45 |
| 3 | 120222 | ADAPTER, 6MJ-6MB90 |
| 4 | 120319 | ADAPTER, 6MJ-6MB |
| 5 | 320291 | HOSE ASSY, LEFT STEERING |
| 6 | 320292 | HOSE ASSY, RIGHT STEERING |
| 7 | 320293 | HOSE ASSY, STEERING PRESSURE |
| 8 | 320294 | HOSE ASSY, STEERING TO TANK |
| 9 | 320295 | HOSE ASSY, STEERING POWER BEYOND |
| 10 | 323010 | CYLINDER - STEERING, 1-3/4 X 6 |
| 11 | 323046 | MOTOR, STEERING ORBITAL |
| 12 | 510174 | GREASE ZERK, 1/4-28 ST |

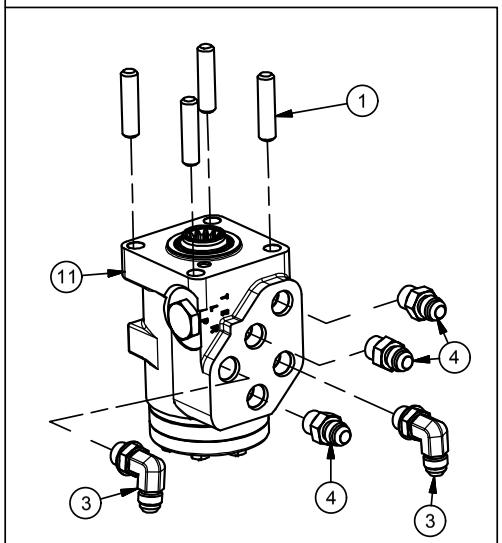


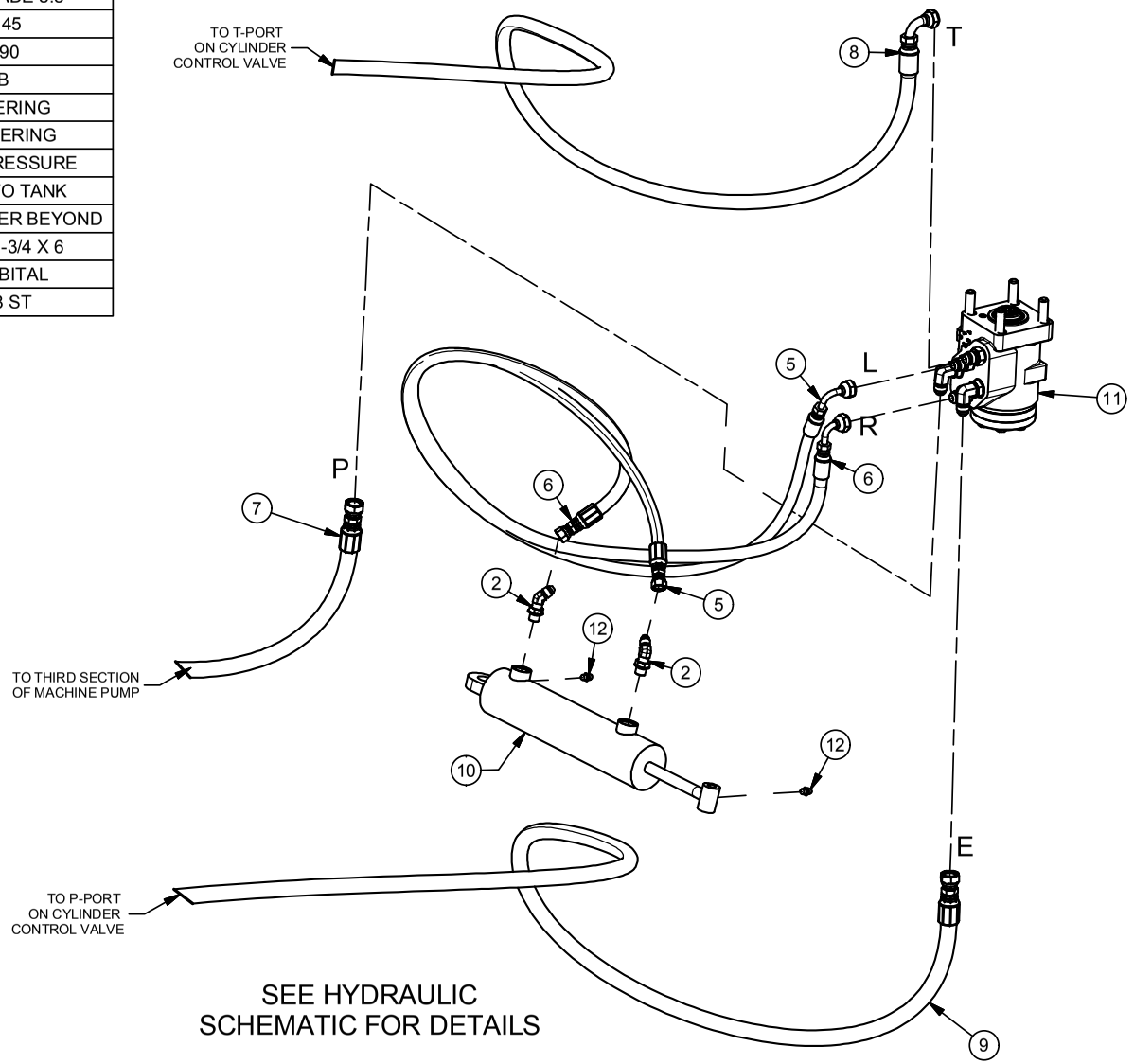


SEE HYDRAULIC
SCHEMATIC FOR DETAILS

10/2/2017

# Cylinder Control Valve Assembly & Plumbing

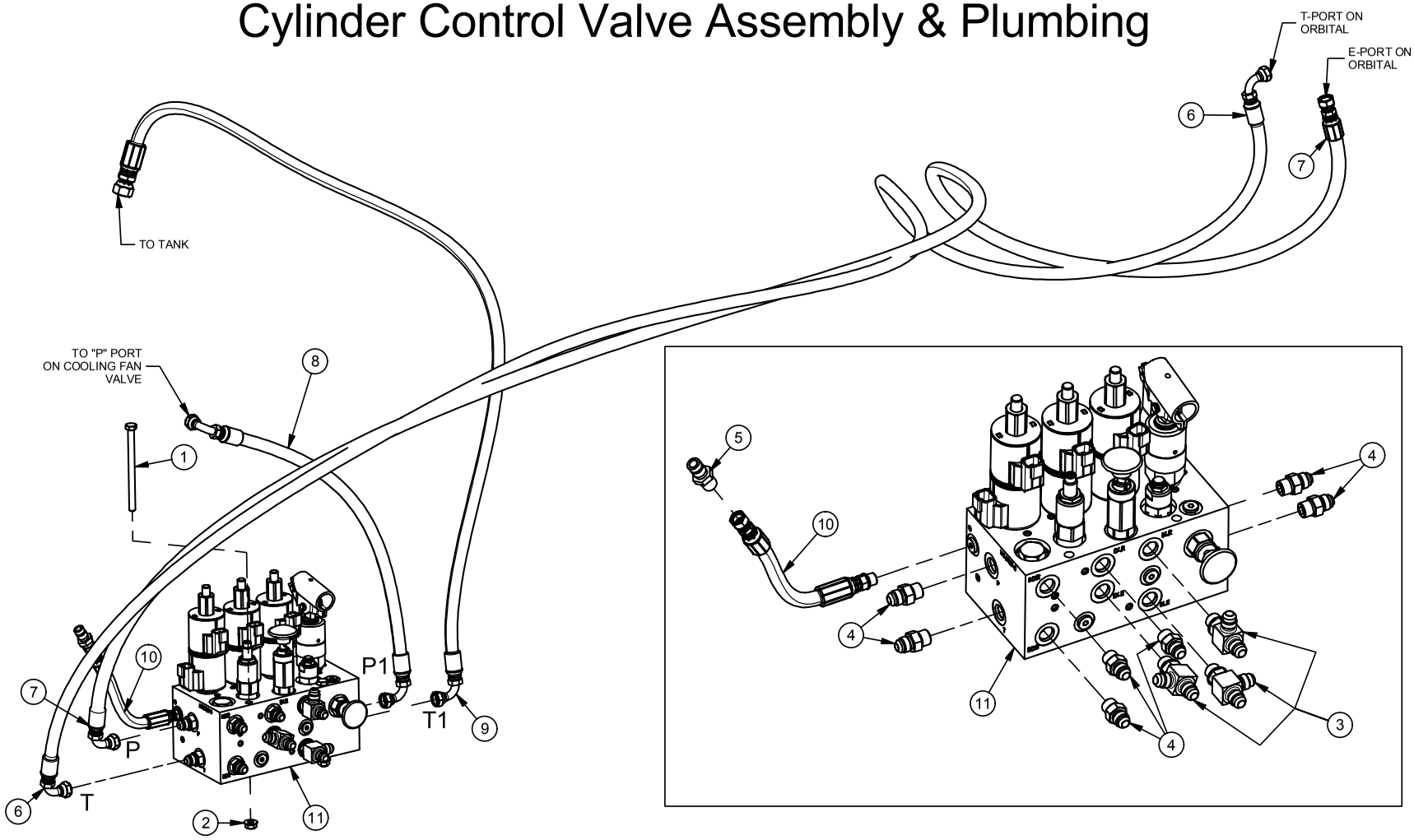


| Parts List | | | Parts List | | |
|---|---|---|---|---|---|
| ITEM | PART # | DESCRIPTION | ITEM | PART # | DESCRIPTION |
| 1 | 110529 | BOLT, 5/16-18 X 4.5 | 7 | 320295 | HOSE ASSY, STEERING POWER BEYOND |
| 2 | 110606 | NUT, 5/16-18 WIZ FLANGE | 8 | 320322 | HOSE ASSY, COOLING FAN PRESSURE |
| 3 | 120279 | ADAPTER, 6MJ-6MB-6MJ | 9 | 320324 | HOSE ASSY, CYL & COOLING VALVE TO TANK |
| 4 | 120319 | ADAPTER, 6MJ-6MB | 10 | 320335 | HOSE ASSY, TEST PORT |
| 5 | 120521 | FITTING - TEST PORT | 11 | 323044 | VALVE, CYLINDER MANIFOLD |
| 6 | 320294 | HOSE ASSY, STEERING TO TANK | | | |

| 323044 Service Parts | |
|---|---|
| PART # | DESCRIPTION |
| 322086 | Counter Balance Valve, 3000 PSI |
| 522163 | Coil, #10 Hydraforce, DT04-02P |
| 820234 | Spool Leveling & Lift Valve |

12/11/2018

# Hopper Plumbing

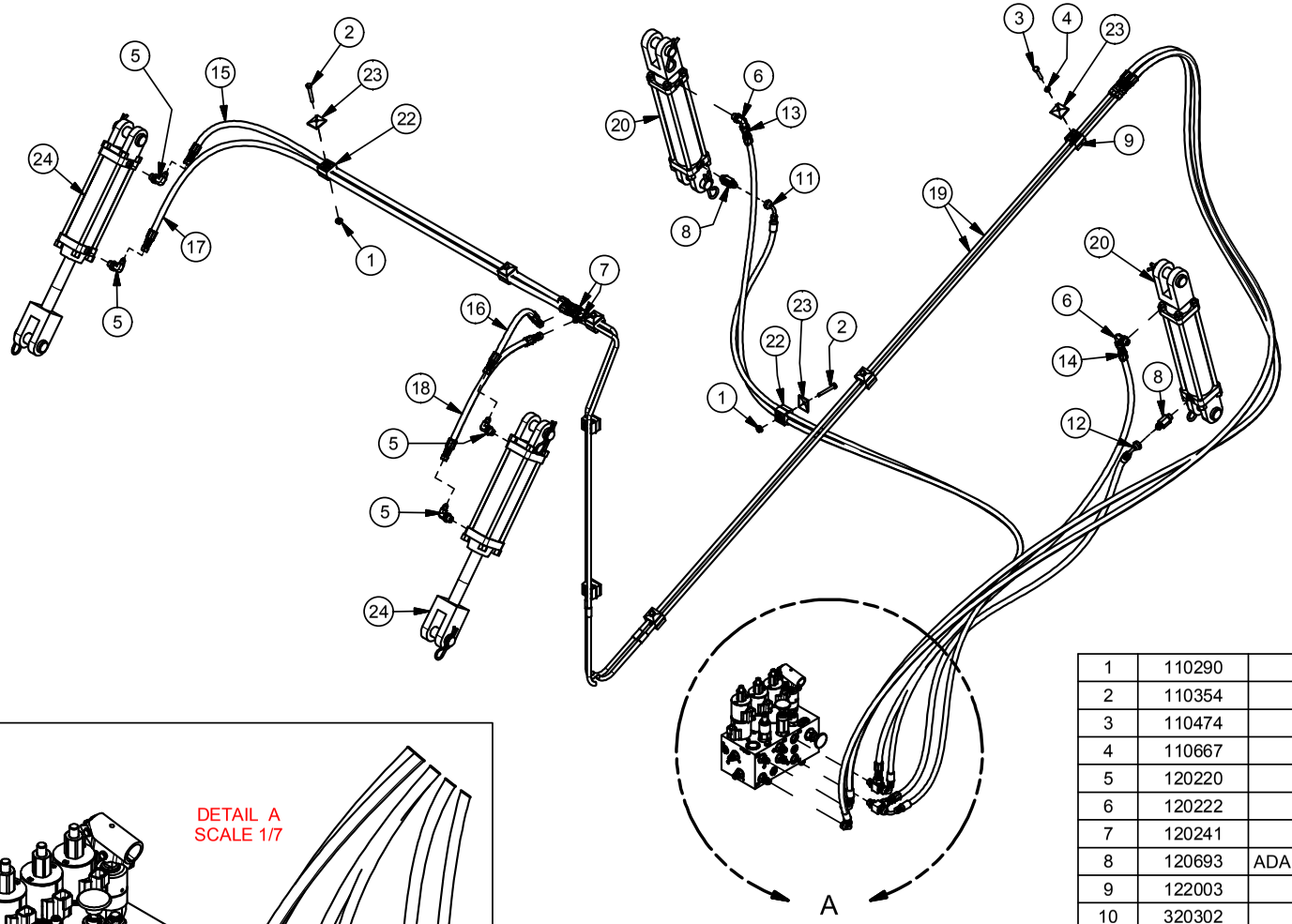


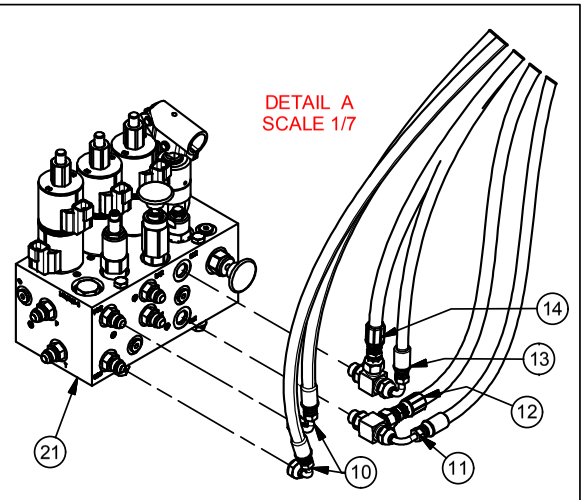


2/25/2016

| ITEM | PART # | DESCRIPTION |
|---|---|---|
| 1 | 110290 | NUT, 1/4-20 WIZ FLANGE |
| 2 | 110354 | BOLT, 1/4-20 X 2.0 HEX HEAD |
| 3 | 110474 | BOLT, 1/4-20 X 1-1/2 |
| 4 | 110667 | WASHER, 1/4" LOCK |
| 5 | 120220 | ADAPTER, 4MJ-6MB90 |
| 6 | 120222 | ADAPTER, 6MJ-6MB90 |
| 7 | 120241 | ADAPTER, 4MJ-4MJ-4MJ |
| 8 | 120693 | ADAPTER - VELOCITY, 4 GPM, 6MB-6MJ |
| 9 | 122003 | DOUBLE HOSE CLAMP |
| 10 | 320302 | HOSE ASSY, HOPPER DOOR |
| 11 | 320319 | HOSE ASSY, LH HOPPER EXTEND |
| 12 | 320320 | HOSE ASSY, RH HOPPER EXTEND |
| 13 | 320321 | HOSE ASSY, LH HOPPER RETRACT |
| 14 | 320328 | HOSE ASSY, RH HOPPER RETRACT |
| 15 | 320329 | HOSE ASSY, LH DOOR EXTEND |
| 16 | 320330 | HOSE ASSY, RH DOOR EXTEND |
| 17 | 320331 | HOSE ASSY, LH DOOR RETRACT |
| 18 | 320332 | HOSE ASSY, RH DOOR RETRACT |
| 19 | 322011 | STEEL HOSE ASSY, HOPPER ARM |
| 20 | 323041 | CYLINDER - 2.5 X 8, SAE-6 |
| 21 | 323044 | VALVE, CYLINDER MANIFOLD |
| 22 | 522104 | DOUBLE HOSE CLAMP |
| 23 | 522105 | DOUBLE COVERPLATE |
| 24 | 923011 | Cylinder, 2 X 6, -6 SAE Cross |

Parts List

Parts List

# Cooling Fan Plumbing

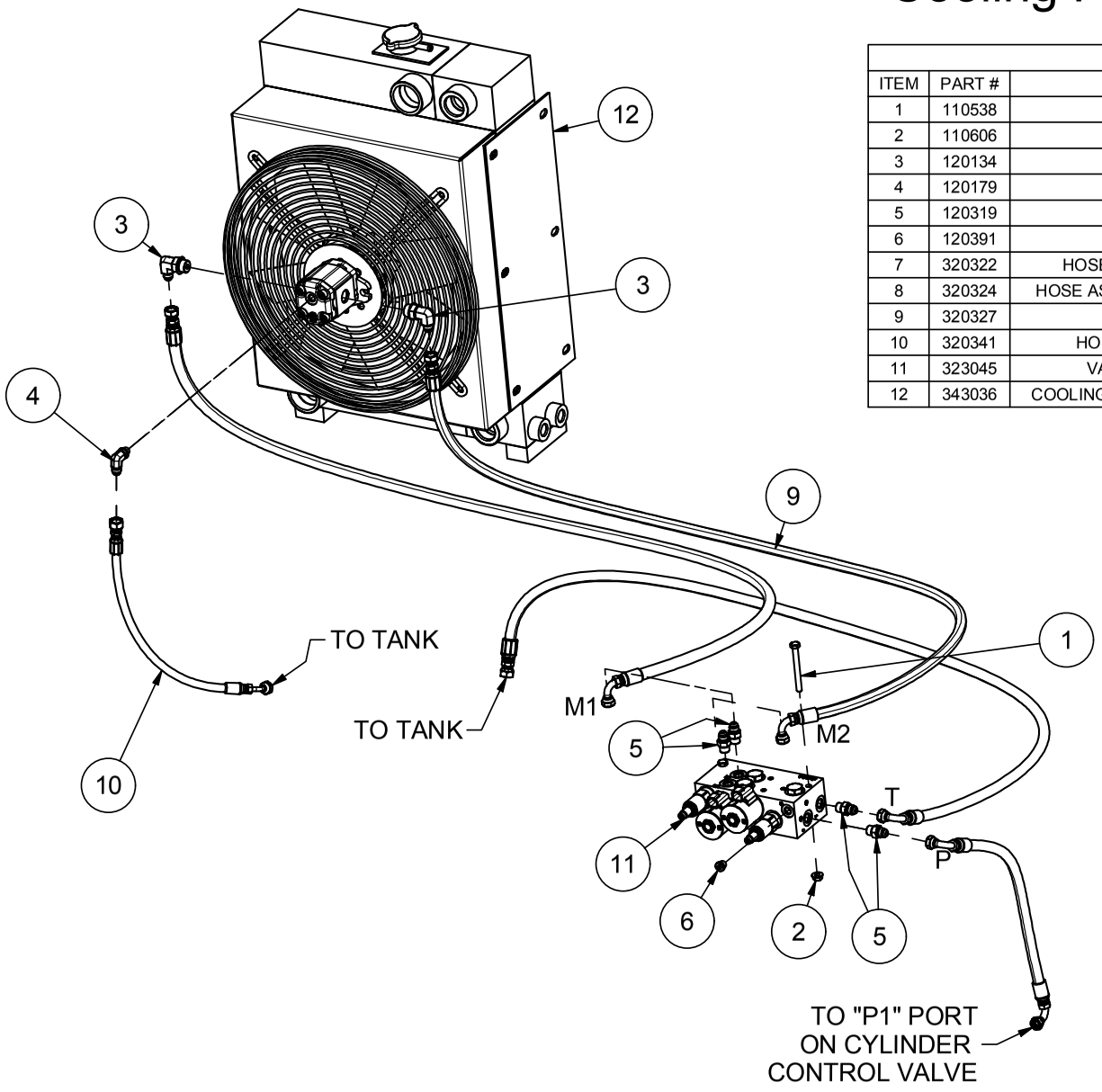


| Parts List | | |
|---|---|---|
| ITEM | PART # | DESCRIPTION |
| 1 | 110538 | BOLT, 5/16-18 X 3.0 |
| 2 | 110606 | NUT, 5/16-18 WIZ FLANGE |
| 3 | 120134 | ADAPTER, 6MJ-8MB90 |
| 4 | 120179 | ADAPTER, 6MJ-4MB90 |
| 5 | 120319 | ADAPTER, 6MJ-6MB |
| 6 | 120391 | PLUG, 4MB, INT SH |
| 7 | 320322 | HOSE ASSY, COOLING FAN PRESSURE |
| 8 | 320324 | HOSE ASSY, CYL & COOLING VALVE TO TANK |
| 9 | 320327 | HOSE ASSY, COOLING FAN |
| 10 | 320341 | HOSE ASSY, COOLING FAN MTR CD |
| 11 | 323045 | VALVE, COOLING FAN MANIFOLD |
| 12 | 343036 | COOLING PACKAGE, RADIATOR & OIL COOLER |

| 343036 Service Parts | |
|---|---|
| PART # | DESCRIPTION |
| 312029 | Fan, Cooling |
| 312030 | Mount, Finger Guard/Mount |
| 312031 | Cap, Radiator |
| 322094 | Motor, hydraulic 0.22CI |
| 332038 | Switch, 140F, 8MB, NC |
| 332039 | Switch, 165F, 8MB, NC |
| 332041 | Switch, 190F, 8MB, NO |

12/11/2018

# TV35 TIER4F DIESEL WIRING SCHEMATIC DIAGRAM OVERVIEW

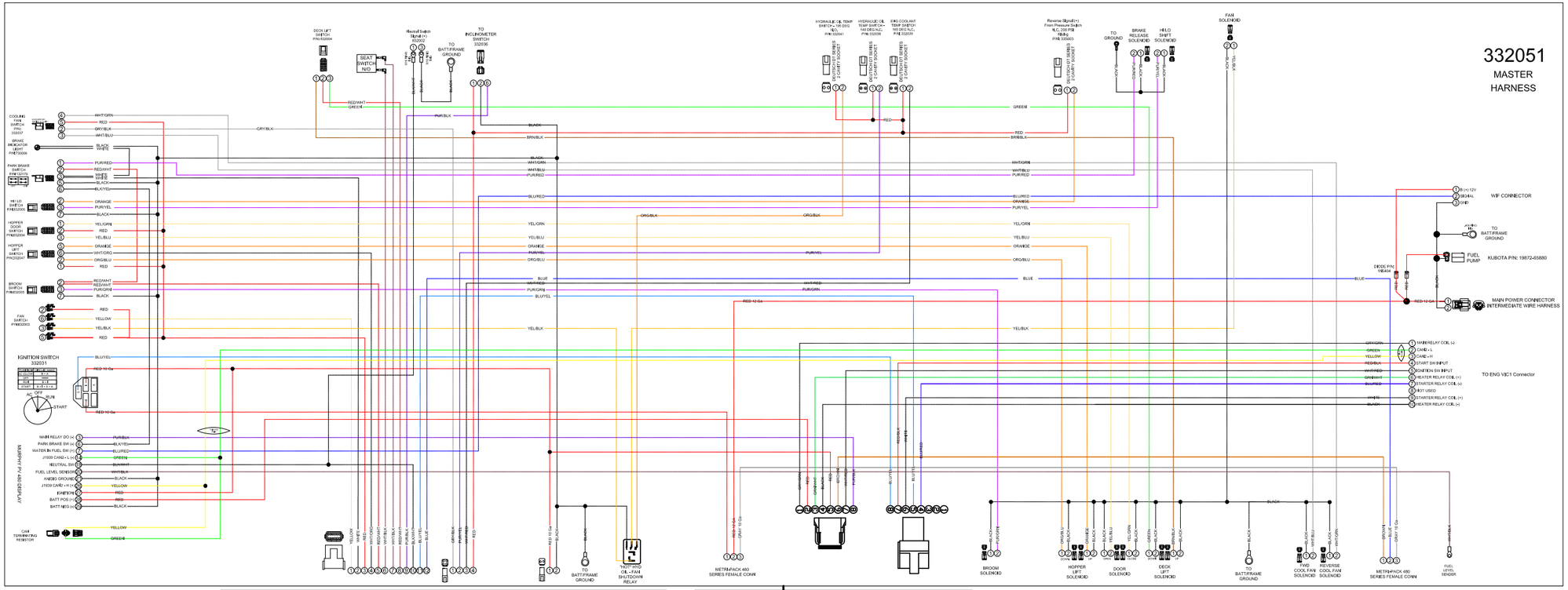


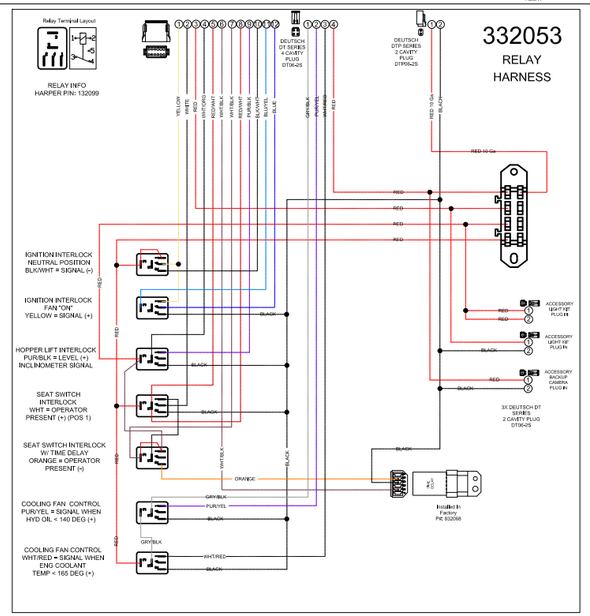


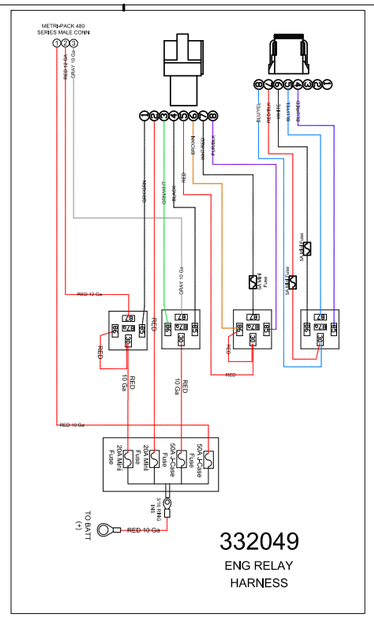


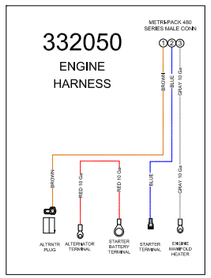


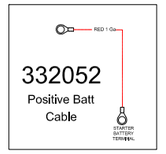

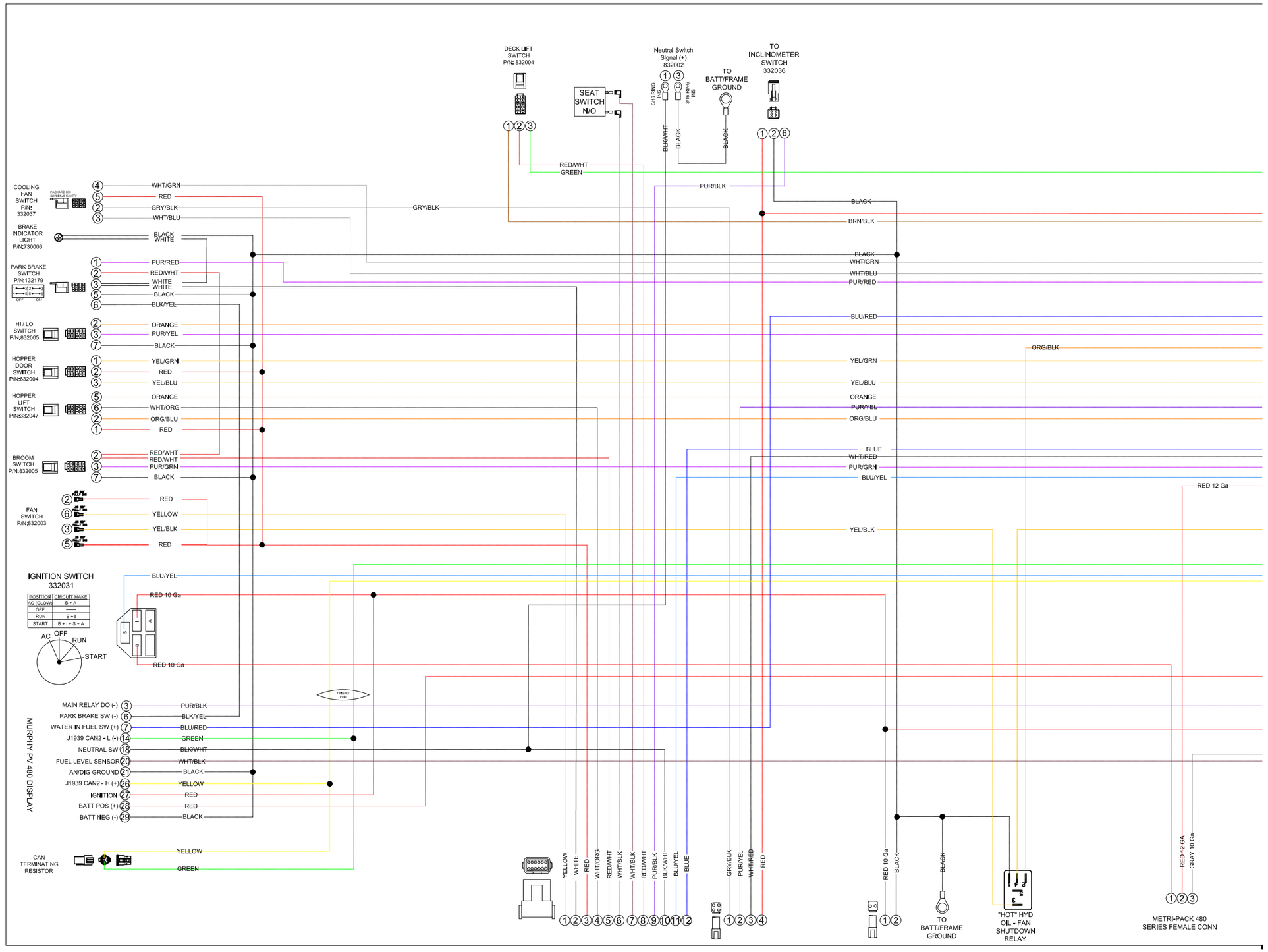
DECK LIFT SWITCH P/N: 832004
SEAT SWITCH N/O
Neutral Switch Signal (+) 832002
3/16 RING NS
3/16 RING NS
TO BATT/FRAME GROUND
TO INCLINOMETER SWITCH 332036
BLK/WHT
BLACK
BLACK
RED/WHT
GREEN
PUR/BLK
BLACK
BRN/BLK
COOLING FAN SWITCH P/N: 332037
PACKARD 630 SERIES, 6 CAVITY
WHT/GRN
RED
GRY/BLK
WHT/BLU
GRY/BLK
BRAKE INDICATOR LIGHT P/N:730006
BLACK
WHITE
BLACK
WHT/GRN
WHT/BLU
PUR/RED
PARK BRAKE SWITCH P/N:132179
OFF
ON
PUR/RED
RED/WHT
WHITE
WHITE
BLACK
BLK/YEL
BLU/RED
HI / LO SWITCH P/N:832005
ORANGE
PUR/YEL
BLACK
ORG/BLK
HOPPER DOOR SWITCH P/N:832004
YEL/GRN
RED
YEL/BLU
YEL/GRN
YEL/BLU
HOPPER LIFT SWITCH P/N:332047
ORANGE
WHT/ORG
ORG/BLU
RED
ORANGE
PUR/YEL
ORG/BLU
BROOM SWITCH P/N:832005
RED/WHT
RED/WHT
PUR/GRN
BLACK
BLUE
WHT/RED
PUR/GRN
BLU/YEL
FAN SWITCH P/N:832003
RED
YELLOW
YEL/BLK
RED
RED 12 Ga
YEL/BLK
IGNITION SWITCH 332031
POSITION
CIRCUIT MAKE
AC (GLOW)
B + A
OFF
RUN
B + I
START
B + I + S + A
AC
OFF
RUN
START
BLU/YEL
RED 10 Ga
RED 10 Ga
TWISTED PAIR
MURPHY PV 480 DISPLAY
MAIN RELAY DO (-) 3
PARK BRAKE SW (-) 6
WATER IN FUEL SW (+) 7
J1939 CAN2 - L (-) 14
NEUTRAL SW 18
FUEL LEVEL SENSOR 20
AN/DIG GROUND 21
J1939 CAN2 - H (+) 26
IGNITION 27
BATT POS (+) 28
BATT NEG (-) 29
PUR/BLK
BLK/YEL
BLU/RED
GREEN
BLK/WHT
WHT/BLK
BLACK
YELLOW
RED
RED
BLACK
CAN TERMINATING RESISTOR
YELLOW
GREEN
YELLOW
WHITE
RED
WHT/ORG
RED/WHT
WHT/BLK
WHT/BLK
RED/WHT
PUR/BLK
BLK/WHT
BLU/YEL
BLUE
GRY/BLK
PUR/YEL
WHT/RED
RED
RED 10 Ga
BLACK
BLACK
TO BATT/FRAME GROUND
"HOT" HYD OIL - FAN SHUTDOWN RELAY
RED 12 GA
GRAY 10 Ga
METRI-PACK 480 SERIES FEMALE CONN

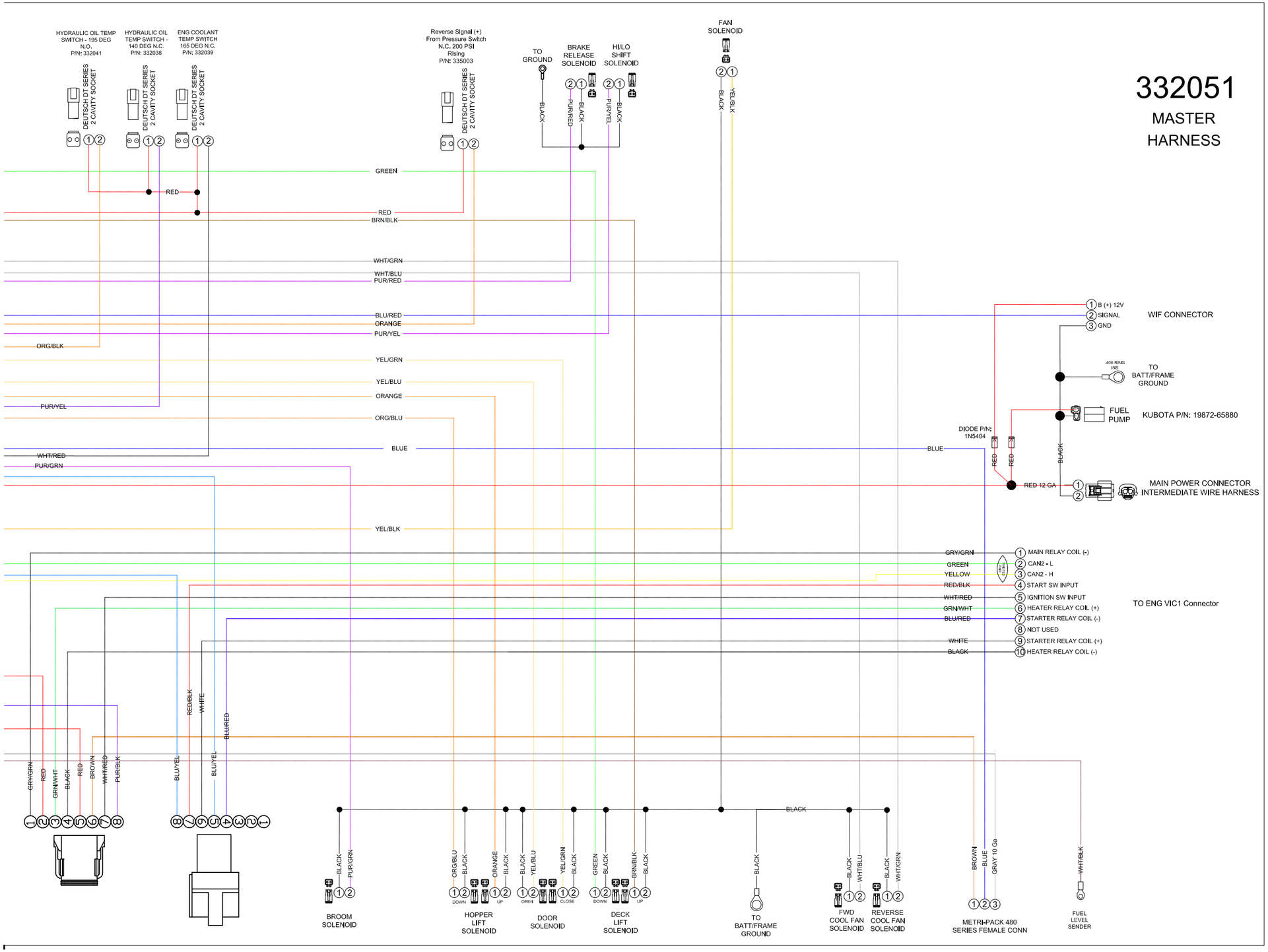
332051
MASTER
HARNESS
HYDRAULIC OIL TEMP SWITCH - 195 DEG N.O. P/N: 332041
HYDRAULIC OIL TEMP SWITCH - 140 DEG N.C. P/N: 332038
ENG COOLANT TEMP SWITCH 165 DEG N.C. P/N: 332039
DEUTSCH DT SERIES 2 CAVITY SOCKET
Reverse SIgnal (+) From Pressure Switch N.C. 200 PSI RIsIng P/N: 335003
TO GROUND
BRAKE RELEASE SOLENOID
HI/LO SHIFT SOLENOID
FAN SOLENOID
GREEN
RED
BRN/BLK
WHT/GRN
WHT/BLU
PUR/RED
BLU/RED
ORANGE
PUR/YEL
ORG/BLK
YEL/GRN
YEL/BLU
ORG/BLU
BLUE
WHT/RED
PUR/GRN
YEL/BLK
BLACK
B (+) 12V
SIGNAL
GND
WIF CONNECTOR
.406 RING
TO BATT/FRAME GROUND
FUEL PUMP
KUBOTA P/N: 19872-65880
DIODE P/N: 1N5404
RED 12 GA
MAIN POWER CONNECTOR INTERMEDIATE WIRE HARNESS
GRY/GRN
GREEN
YELLOW
RED/BLK
WHT/RED
GRN/WHT
BLU/RED
WHITE
BLACK
MAIN RELAY COIL (-)
CAN2 - L
CAN2 - H
START SW INPUT
IGNITION SW INPUT
HEATER RELAY COIL (+)
STARTER RELAY COIL (-)
NOT USED
STARTER RELAY COIL (+)
HEATER RELAY COIL (-)
TO ENG VIC1 Connector
BROOM SOLENOID
HOPPER LIFT SOLENOID
DOOR SOLENOID
DECK LIFT SOLENOID
TO BATT/FRAME GROUND
FWD COOL FAN SOLENOID
REVERSE COOL FAN SOLENOID
METRI-PACK 480 SERIES FEMALE CONN
FUEL LEVEL SENDER
BROWN
GRAY 10 Ga
DOWN
UP
OPEN
CLOSE

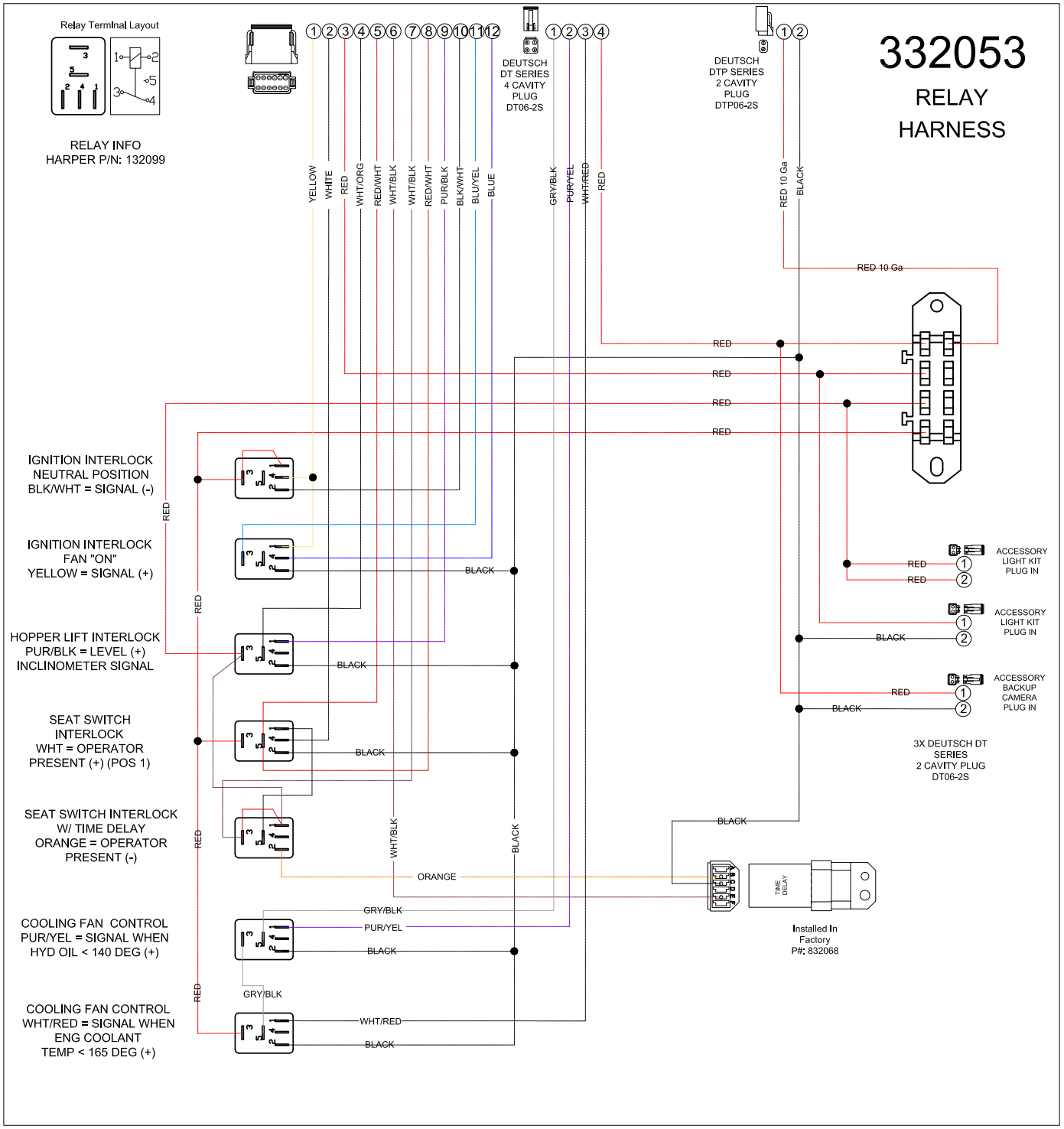
332053
RELAY
HARNESS
Relay Terminal Layout
RELAY INFO
HARPER P/N: 132099
DEUTSCH
DT SERIES
4 CAVITY
PLUG
DT06-2S
DEUTSCH
DTP SERIES
2 CAVITY
PLUG
DTP06-2S
YELLOW
WHITE
RED
WHT/ORG
RED/WHT
WHT/BLK
WHT/BLK
RED/WHT
PUR/BLK
BLK/WHT
BLU/YEL
BLUE
GRY/BLK
PUR/YEL
WHT/RED
RED
RED 10 Ga
BLACK
IGNITION INTERLOCK
NEUTRAL POSITION
BLK/WHT = SIGNAL (-)
IGNITION INTERLOCK
FAN "ON"
YELLOW = SIGNAL (+)
HOPPER LIFT INTERLOCK
PUR/BLK = LEVEL (+)
INCLINOMETER SIGNAL
SEAT SWITCH
INTERLOCK
WHT = OPERATOR
PRESENT (+) (POS 1)
SEAT SWITCH INTERLOCK
W/ TIME DELAY
ORANGE = OPERATOR
PRESENT (-)
COOLING FAN CONTROL
PUR/YEL = SIGNAL WHEN
HYD OIL < 140 DEG (+)
COOLING FAN CONTROL
WHT/RED = SIGNAL WHEN
ENG COOLANT
TEMP < 165 DEG (+)
ACCESSORY
LIGHT KIT
PLUG IN
ACCESSORY
LIGHT KIT
PLUG IN
ACCESSORY
BACKUP
CAMERA
PLUG IN
3X DEUTSCH DT
SERIES
2 CAVITY PLUG
DT06-2S
TIME
DELAY
Installed In
Factory
P#: 832068

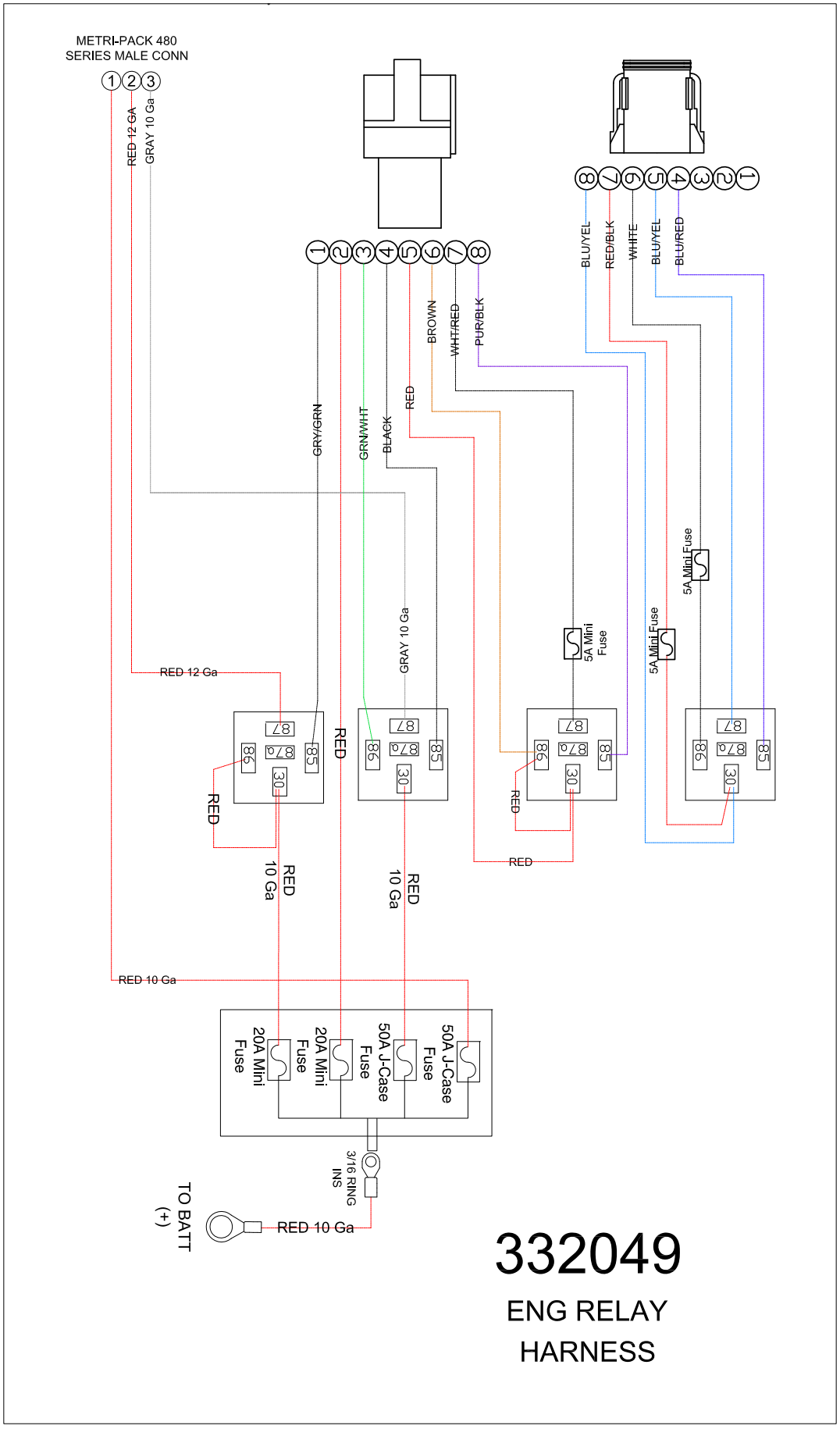
METRI-PACK 480
SERIES MALE CONN
1 2 3
RED 12 GA
GRAY 10 Ga
1 2 3 4 5 6 7 8
GRY/GRN
GRN/WHT
BLACK
RED
BROWN
WHT/RED
PUR/BLK
8 7 6 5 4 3 2 1
BLU/YEL
RED/BLK
WHITE
BLU/YEL
BLU/RED
5A Mini Fuse
5A Mini Fuse
5A Mini Fuse
GRAY 10 Ga
RED 12 Ga
87
87a
86
85
30
RED
RED
10 Ga
RED
10 Ga
RED
RED
RED 10 Ga
20A Mini Fuse
20A Mini Fuse
50A J-Case Fuse
50A J-Case Fuse
3/16 RING INS
TO BATT (+)
RED 10 Ga
332049
ENG RELAY
HARNESS

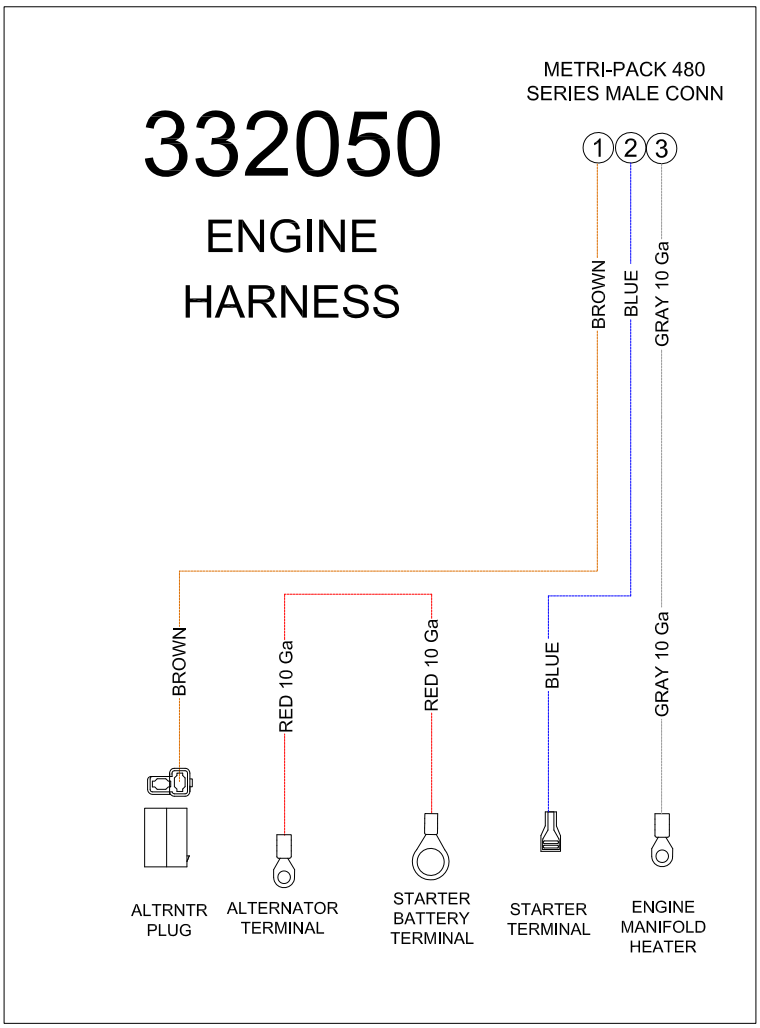
METRI-PACK 480
SERIES MALE CONN
332050
ENGINE
HARNESS
1
2
3
BROWN
BLUE
GRAY 10 Ga
BROWN
RED 10 Ga
RED 10 Ga
BLUE
GRAY 10 Ga
ALTRNTR
PLUG
ALTERNATOR
TERMINAL
STARTER
BATTERY
TERMINAL
STARTER
TERMINAL
ENGINE
MANIFOLD
HEATER

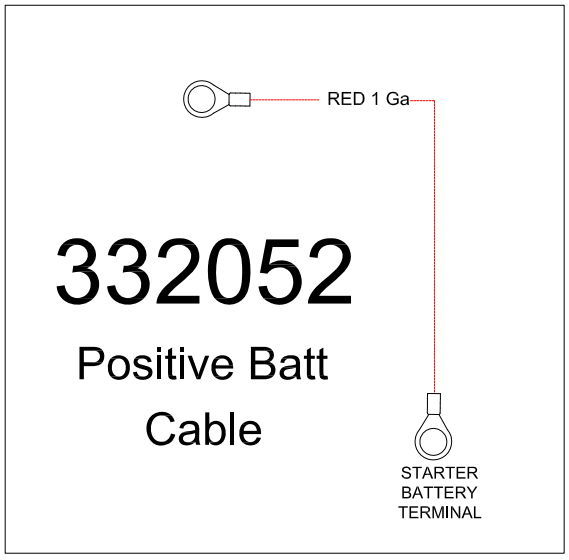
RED 1 Ga
332052
Positive Batt
Cable
STARTER
BATTERY
TERMINAL

# Hydraulic Valves Electrical Assembly

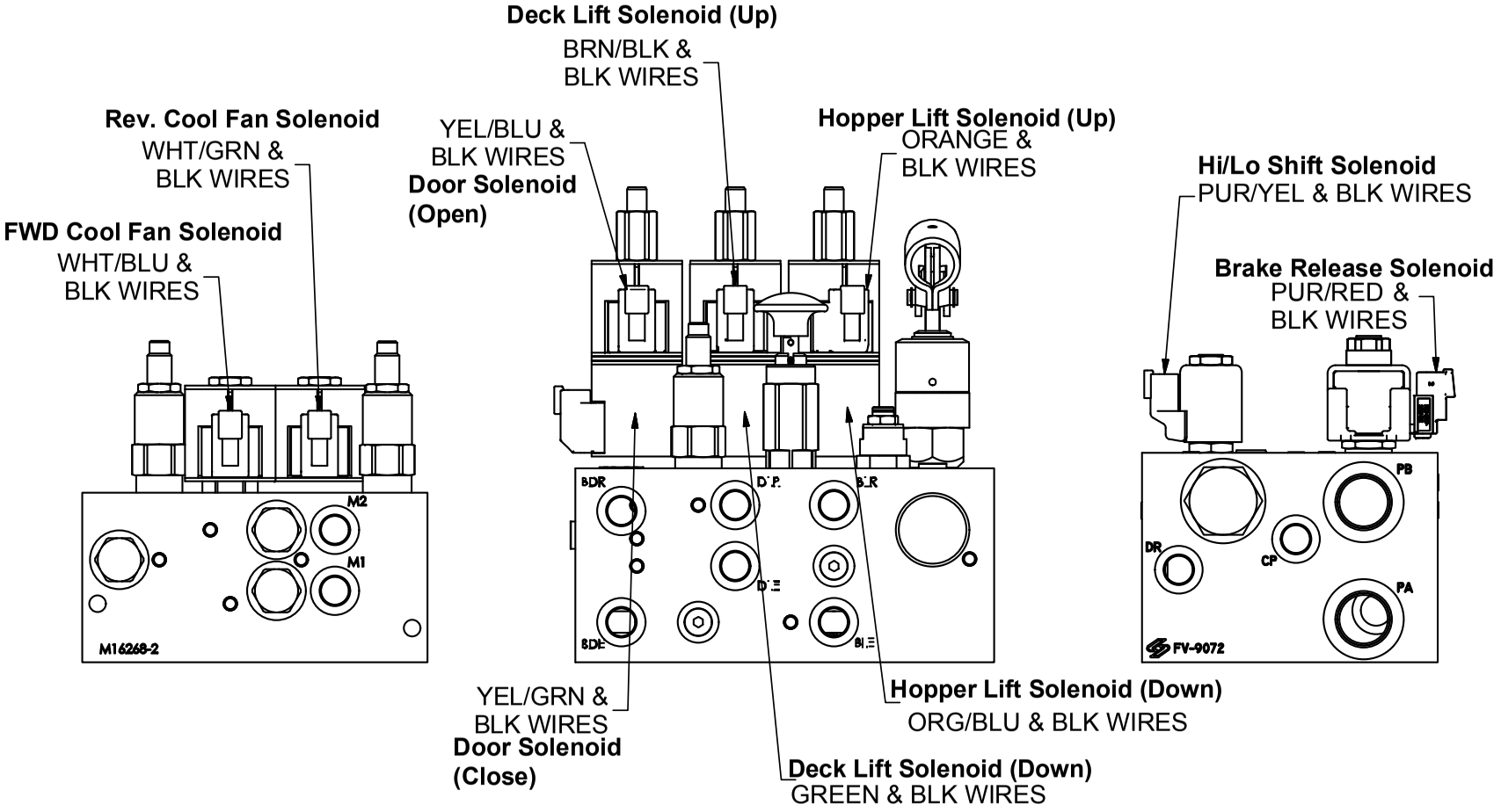


**Cooling Fan Valve**

**Cylinder Control Valve**

**Propulsion Valve**

# TEMPERATURE SWITCH ELECTRICAL ASSEMBLY

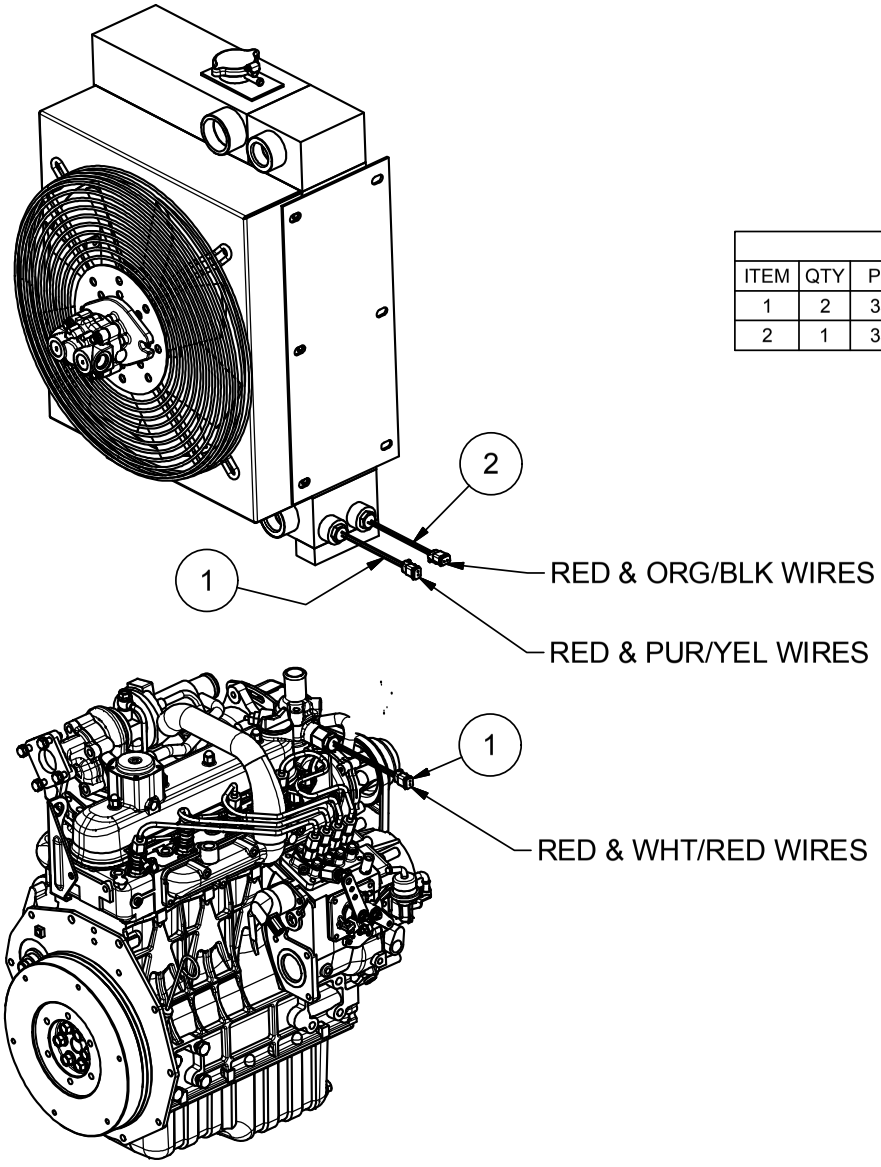


| Parts List | | | |
|---|---|---|---|
| ITEM | QTY | PART # | DESCRIPTION |
| 1 | 2 | 332038 | Switch, 140 F Temp, 8MB, N.C. Rising |
| 2 | 1 | 332041 | Switch, 190 F Temp, 8MB, N.O. Rising |

10/3/2017

# Kit, Brush Rotor

Customer Install P/N: 300064
Factory Install P/N: 300065

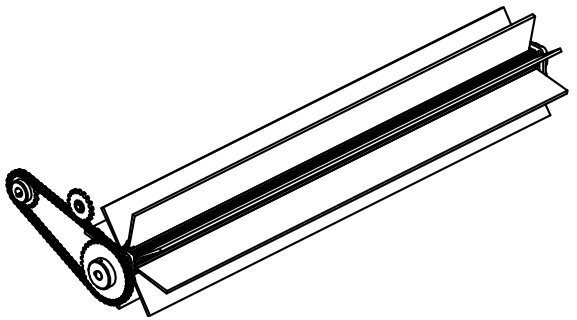

| PARTS LIST | | | |
|---|---|---|---|
| ITEM | QTY | PART # | DESCRIPTION |
| 1 | 8 | 110402 | Bolt, 3/8-16 X 1.25 in Carriage |
| 2 | 8 | 110672 | WASHER, 3/8" LOCK |
| 3 | 8 | 110826 | NUT, 3/8-16 GR 5 |
| 4 | 1 | 302003 | BRUSH, 60 in |
| 5 | 1 | 311369 | SHAFT, BRUSH DECK |
| 6 | 1 | 342007 | SPROCKET - IDLER, 5017 |
| 7 | 1 | 342016 | SPROCKET - 50B19 X 1 |
| 8 | 1 | 342017 | SPROCKET - 50B35 X 1 |
| 9 | 1 | 342043 | CHAIN, #50 - 68 PIN W/ CONNECTOR (43.625") |
| 10 | 2 | 510089 | KEY, 1/4 X 1/4 X 1.25 in |
| 11 | 2 | 942093 | BEARING - 1", 4 BLT FLNG |
| 12 | 3 | 973002 | FLANGE, 2 1/8 X 1, TJ-16 |

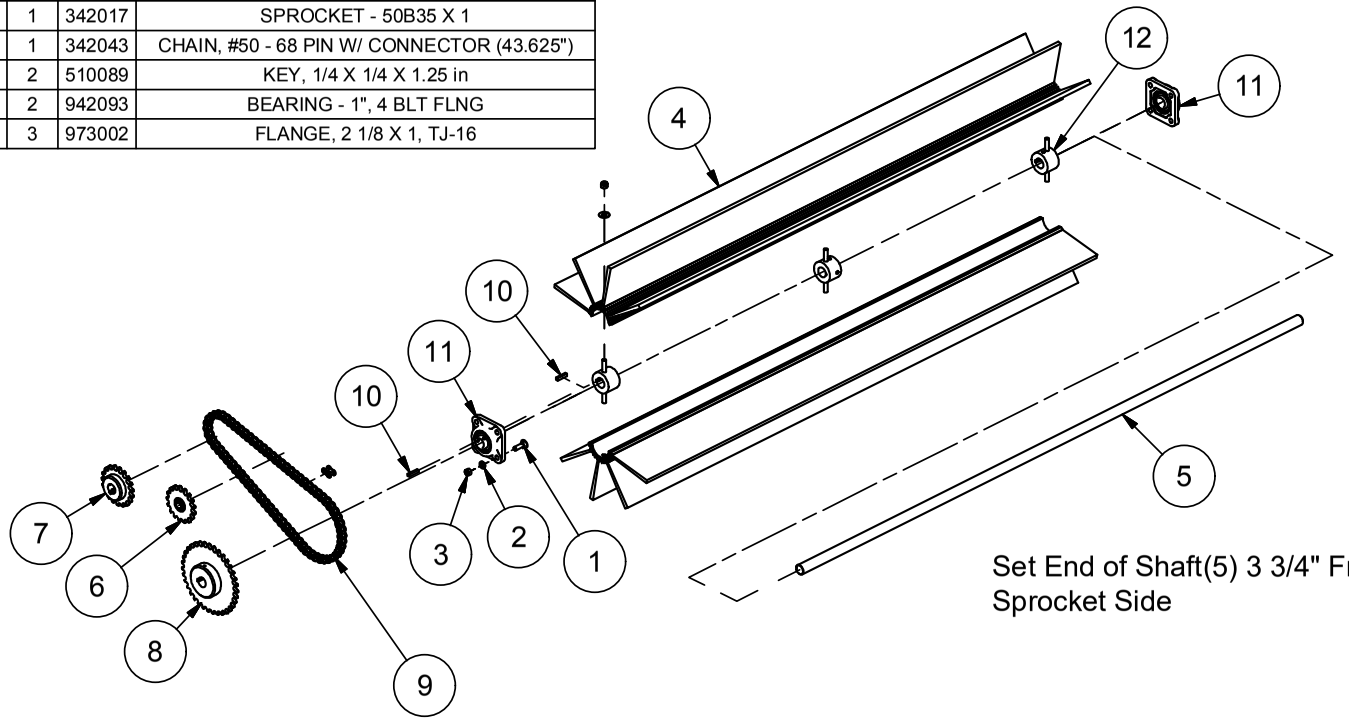


Set End of Shaft(5) 3 3/4" From Flange on Sprocket Side

| 342043 - Service Parts | |
|---|---|
| PART # | DESCRIPTION |
| 142006 | ROLLER CHAIN, #50 - 68 PIN (43.625") |
| 140011 | CONNECTING LINK, #50 CHAIN |

AFTER INSTALLATION IS COMPLETE, CHECK THE ROTOR SPINDOWN. THE ROTOR SHOULD COME TO A COMPLETE STOP APPROXIMATELY 5 SECONDS AFTER THE SWITCH HAS BEEN TURNED OFF. IF IT DOES NOT STOP AROUND 5 SECONDS, THEN THE COUNTER BALANCE VALVE MUST BE ADJUSTED. THE ADJUSTMENT PROCEDURE IS LISTED IN THE HYDRAULIC SECTION ON THE "FAN & DECK VALVE" PAGE.

11/5/2019

# Kit, Rubber Finger Rotor

Customer Install P/N: 300066
Factory Install P/N: 300067

| Parts List | | | |
|---|---|---|---|
| ITEM | QTY | PART # | DESCRIPTION |
| 1 | 8 | 110402 | Bolt, 3/8-16 X 1.25 in Carriage |
| 2 | 40 | 110603 | NUT, 5/16-18 LOCK (NYLON) |
| 3 | 8 | 110672 | WASHER, 3/8" LOCK |
| 4 | 8 | 110826 | NUT, 3/8-16 GR 5 |
| 5 | 80 | 302042 | FINGER - RUBBER |
| 6 | 20 | 311403 | CLAMP - RUBBER FINGER |
| 7 | 1 | 315179 | SHAFT - FINGER ROTOR, WELDMENT |
| 8 | 1 | 342007 | SPROCKET - IDLER, 5017 |
| 9 | 1 | 342026 | SPROCKET - 50B27 X 1 |
| 10 | 1 | 342030 | SPROCKET - 50B24 X 1 |
| 11 | 1 | 342043 | CHAIN, #50 - 68 PIN W/ CONNECTOR (43.625") |
| 12 | 1 | 510089 | 1/4" KEYSTOCK |
| 13 | 2 | 942093 | BEARING - 1", 4 BLT FLNG |

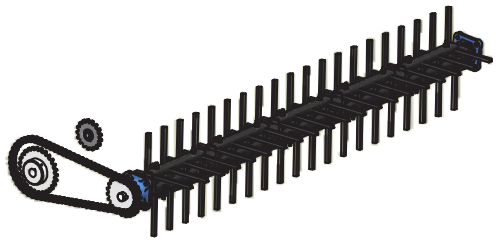

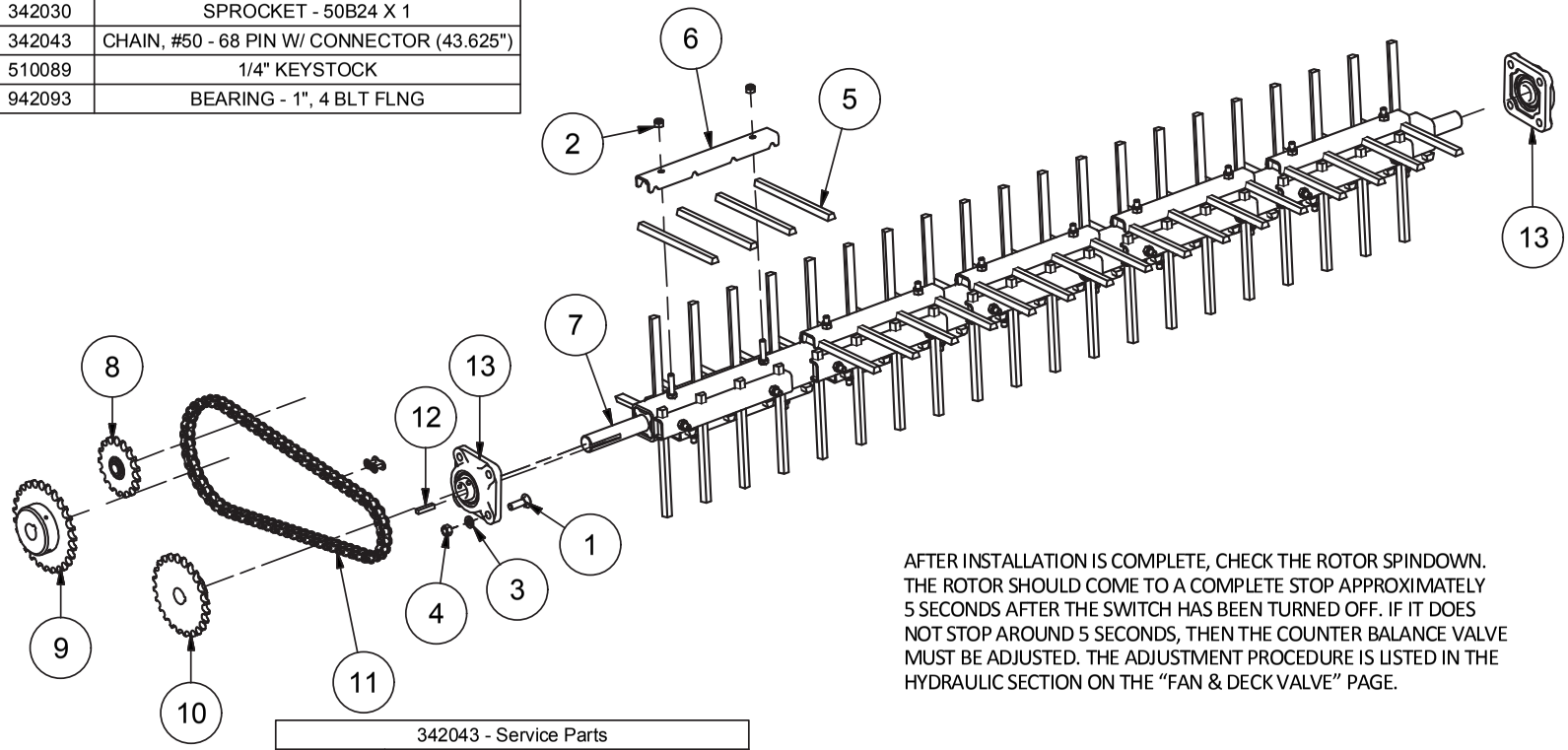


AFTER INSTALLATION IS COMPLETE, CHECK THE ROTOR SPINDOWN. THE ROTOR SHOULD COME TO A COMPLETE STOP APPROXIMATELY 5 SECONDS AFTER THE SWITCH HAS BEEN TURNED OFF. IF IT DOES NOT STOP AROUND 5 SECONDS, THEN THE COUNTER BALANCE VALVE MUST BE ADJUSTED. THE ADJUSTMENT PROCEDURE IS LISTED IN THE HYDRAULIC SECTION ON THE "FAN & DECK VALVE" PAGE.

| 342043 - Service Parts | |
|---|---|
| PART # | DESCRIPTION |
| 142006 | ROLLER CHAIN, #50 - 68 PIN (43.625") |
| 140011 | CONNECTING LINK, #50 CHAIN |

3/28/2017

# Kit, Verticut W/ Fingers Rotor

Customer Install P/N: 300068
Factory Install P/N: 300069

| Parts List | | | |
|---|---|---|---|
| ITEM | QTY | PART # | DESCRIPTION |
| 1 | 1 | 100567 | KEY, 3/8 X 3/8 X 1.75 in |
| 2 | 8 | 110042 | Bolt, 1/2-13 X 1.75 in Carriage |
| 3 | 2 | 110107 | NUT, 3/8-16 HEX JAM GR 2 |
| 4 | 2 | 110325 | SetScrew, 3/8-16 X 0.75 |
| 5 | 1 | 110332 | COLLAR - 1-1/2" SPLIT |
| 6 | 58 | 110603 | NUT, 5/16-18 LOCK (NYLON) |
| 7 | 8 | 110610 | NUT, 1/2-13 |
| 8 | 8 | 110666 | WASHER, 1/2" LOCK |
| 9 | 29 | 110824 | BOLT, U-, 5/16-18 X 2-1/2 X 3-3/16 |
| 10 | 1 | 311400 | SHAFT - VERTICUTTER, TV30 |
| 11 | 2 | 311607 | SPACER, VERTICUTTER BEARING |
| 12 | 29 | 311608 | FINGER, 12" RUBBER |
| 13 | 29 | 311609 | HOLDER, FINGER |
| 14 | 2 | 342044 | SPROCKET - 60BTB30 2012 |
| 15 | 1 | 342045 | BUSHING, TAPER LOCK - 1.5" - 2012 |
| 16 | 1 | 342047 | BUSHING, TAPER LOCK - 1" - 2012 |
| 17 | 1 | 342055 | ROLLER CHAIN, #60 VERTICUT ROTOR |
| 18 | 2 | 410851 | BEARING, 4FNG 1 1/2" |
| 19 | 1 | 942102 | SPROCKET - IDLER, 6011 |
| 20 | 1 | 970475 | NUT - HEX, JAM, 1-3/4 - 5 UNC |
| 21 | 29 | 970803 | SPACER - VERTI CUTTER, 2 IN |
| 22 | 30 | 970804 | DISC - DETHATCH, 10 Ga, 11 POINT |
| 23 | 1 | 970805 | WASHER - CUP, ROTOR |

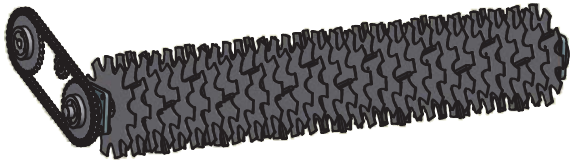

NOTE: FINGERS ROTATED 90° BETWEEN EACH SPACING

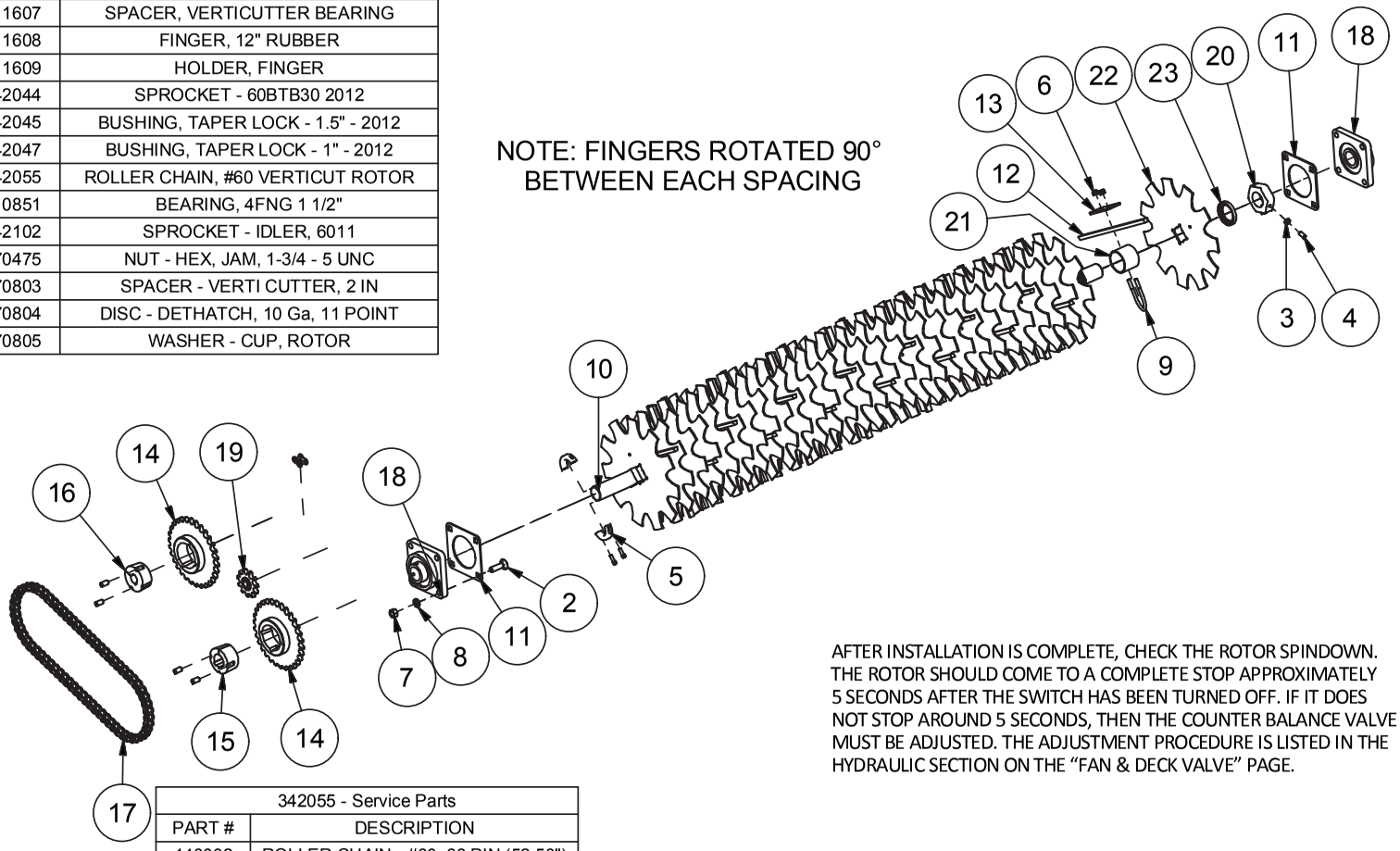


| 342055 - Service Parts | |
|---|---|
| PART # | DESCRIPTION |
| 140002 | ROLLER CHAIN - #60, 68 PIN (52.50") |
| 410442 | CONNECTING LINK, #60 CHAIN |

AFTER INSTALLATION IS COMPLETE, CHECK THE ROTOR SPINDOWN. THE ROTOR SHOULD COME TO A COMPLETE STOP APPROXIMATELY 5 SECONDS AFTER THE SWITCH HAS BEEN TURNED OFF. IF IT DOES NOT STOP AROUND 5 SECONDS, THEN THE COUNTER BALANCE VALVE MUST BE ADJUSTED. THE ADJUSTMENT PROCEDURE IS LISTED IN THE HYDRAULIC SECTION ON THE "FAN & DECK VALVE" PAGE.

3/28/2017

# CANOPY OPTION

**HARPER PRT NO. 300056 - FACTORY INSTALL**
**HARPER PRT NO. 300057 - CUSTOMER INSTALL**

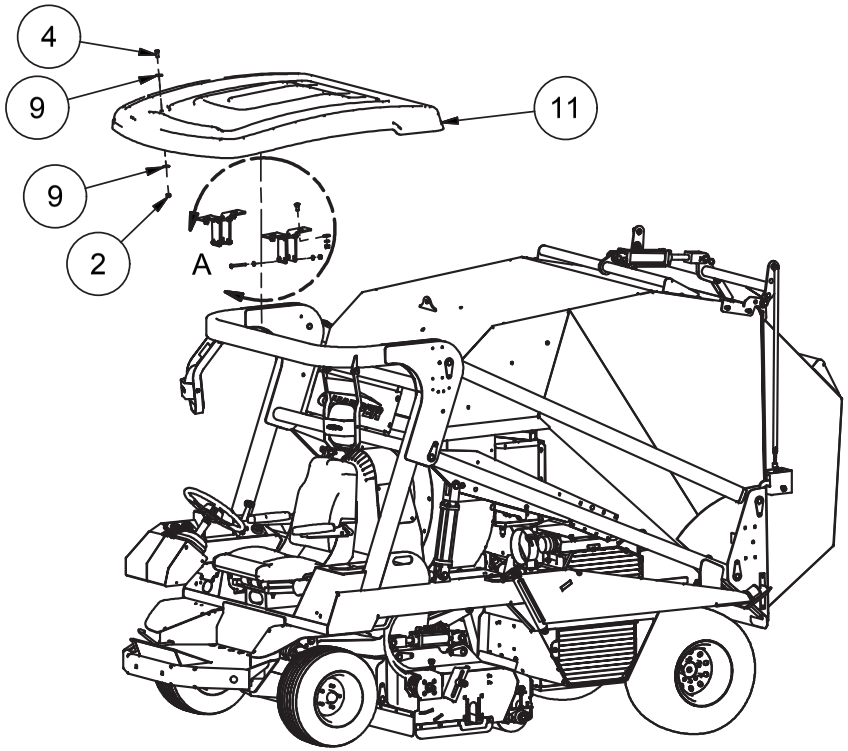

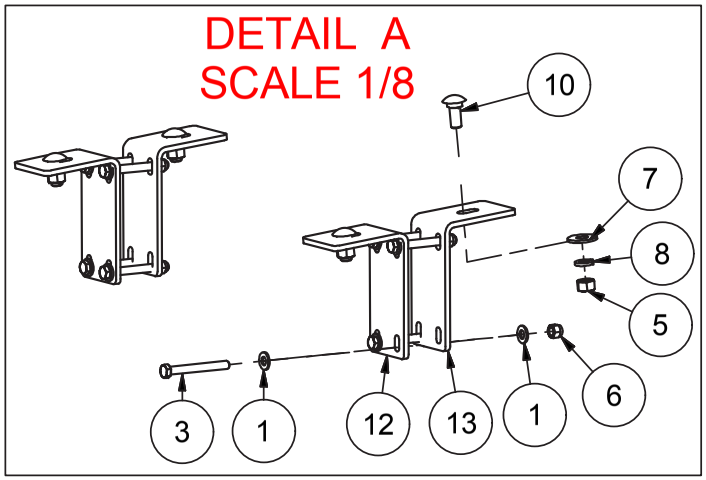


| Parts List | | | |
|---|---|---|---|
| ITEM | QTY | PART # | DESCRIPTION |
| 1 | 16 | 110155 | WASHER, 3/8" FLAT SAE |
| 2 | 8 | 110219 | NUT, 7/16-14 LOCK NYLON INSERT |
| 3 | 8 | 110494 | BOLT, 3/8-16 X 3.25 |
| 4 | 8 | 110528 | BOLT, 7/16-14 X 1.0 |
| 5 | 4 | 110610 | NUT, 1/2-13 |
| 6 | 8 | 110618 | NUT, 3/8-16 LOCK NYLON INSERT |
| 7 | 4 | 110658 | WASHER, 1/2" FLAT STANDARD |
| 8 | 4 | 110666 | WASHER, 1/2" LOCK |
| 9 | 16 | 110670 | WASHER, 7/16" FLAT STANDARD |
| 10 | 4 | 112070 | Bolt, 1/2-13 X 1.25 in Carriage |
| 11 | 1 | 302067 | CANOPY W/ BRACKETS, TV30 |
| 12 | 2 | 311658 | BRACKET, FRONT CANOPY MOUNTING |
| 13 | 2 | 311659 | BRACKET, REAR CANOPY MOUNTING |

# INSTALLATION INSTRUCTIONS

1. SPLIT THE DOUBLE SEAL. APPLY ONE SEAL TO THE UPPER EDGE & APPLY THE OTHER TO THE UPPER BEND. SEE DIAGRAM FOR LOCATION.
2. REMOVE PLASTIC BUMPERS ON EACH SIDE OF THE HOPPER (2015 & NEWER MACHINES DO NOT HAVE THESE)
3. ALIGN THE SLOTS ON THE HOPPER EXTENSION (311654) WITH THE HOLES THAT THE BUMPERS WERE MOUNTED TO.
4. THEN RE-INSTALL THE BOLTS AND BUMPERS TO THE OUTSIDE OF THE EXTENSION. FOR NEWER MACHINES, USE THE 1/4" WIZ BOLTS & WIZ NUTS.
5. SLIDE THE EXTENSION UP UNTIL IT TOUCHES THE BOTTOM SIDE OF THE HOPPER AND THEN TIGHTEN THE BOLTS.
6. NEXT DRILL A 3/8" HOLE INTO THE HOPPER TO ATTACH THE 3/8" BOLT (110437) AND NUT (110645) ON EACH SIDE.

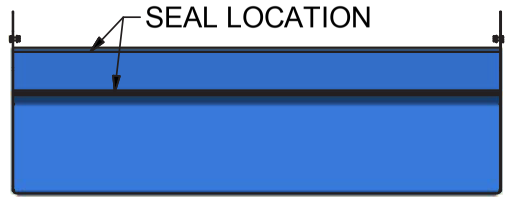


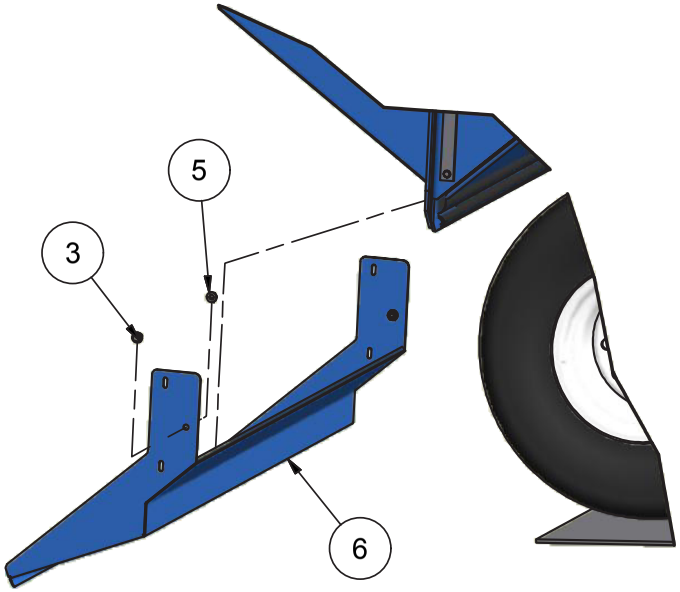


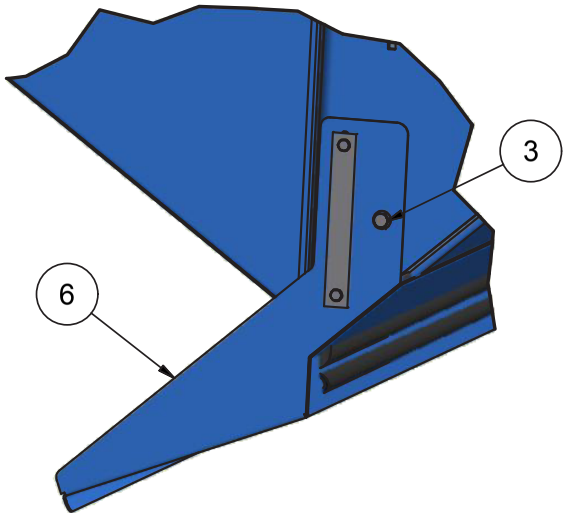


| Parts List | | | |
|---|---|---|---|
| ITEM | QTY | PART # | DESCRIPTION |
| 1 | 57.5" | 102055 | SEAL, RUBBER .5 x .3 DOUBLE |
| 2 | 4 | 110290 | NUT, 1/4-20 WIZ FLANGE |
| 3 | 2 | 110437 | BOLT, 3/8-16 X 0.75, WIZ FLANGE |
| 4 | 4 | 110468 | BOLT, 1/4-20 X 0.75, WIZ FLANGE |
| 5 | 2 | 110645 | NUT, 3/8-16 WIZ FLANGE |
| 6 | 1 | 311654 | EXTENSION, HOPPER DUMP |

# Kit, Hopper Dump Extension

Customer Install P/N: 300054
Factory Install P/N: 300053

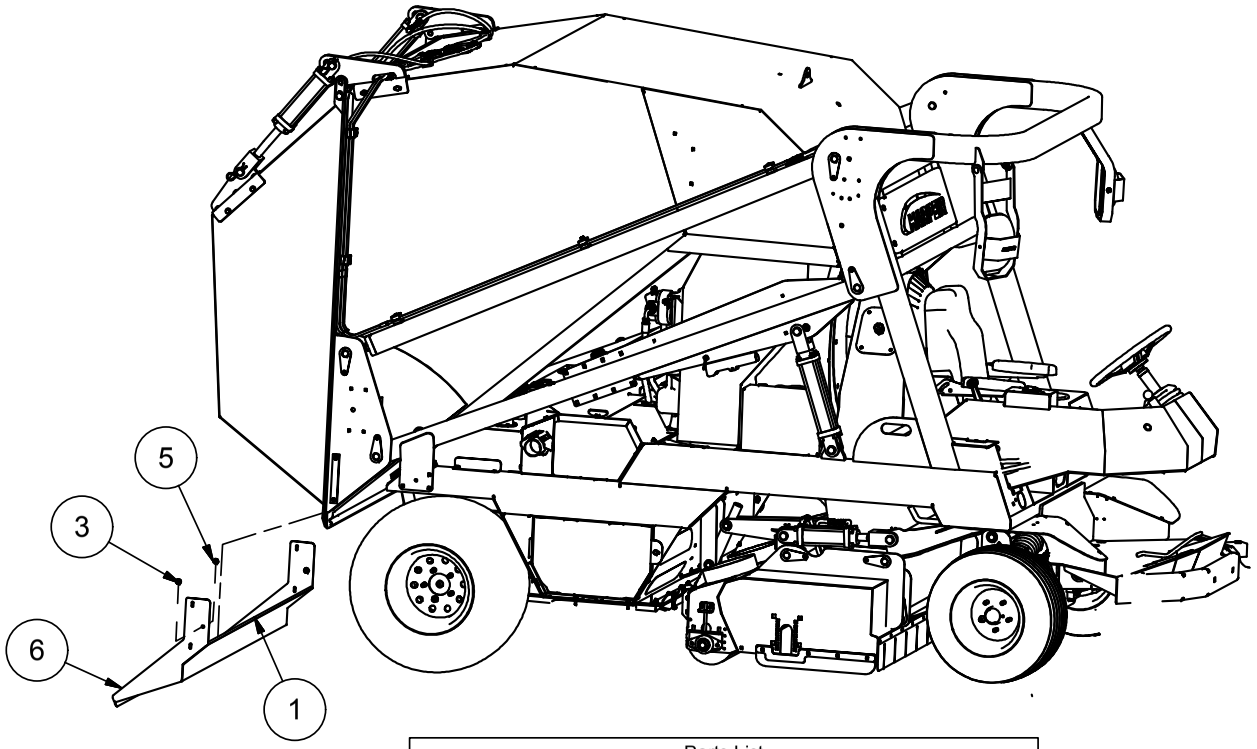


| Parts List | | | |
|---|---|---|---|
| ITEM | QTY | PART # | DESCRIPTION |
| 1 | 57.5" | 102055 | SEAL, RUBBER .5 x .3 DOUBLE |
| 2 | 4 | 110290 | NUT, 1/4-20 WIZ FLANGE |
| 3 | 2 | 110437 | BOLT, 3/8-16 X 0.75, WIZ FLANGE |
| 4 | 4 | 110468 | BOLT, 1/4-20 X 0.75, WIZ FLANGE |
| 5 | 2 | 110645 | NUT, 3/8-16 WIZ FLANGE |
| 6 | 1 | 311654 | EXTENSION, HOPPER DUMP |

2/29/2016

# REMOTE HOSE OPTION

**HARPER PRT NO. 300048 - FACTORY INSTALL**
**HARPER PRT NO. 300049 - CUSTOMER INSTALL**

| Parts List | | | |
|---|---|---|---|
| ITEM | QTY | PART # | DESCRIPTION |
| 1 | 2.5' | 102055 | SEAL, RUBBER .5 x .3 Double |
| 2 | 1 | 110311 | CLAMP, HOSE #912 8.00" |
| 3 | 4 | 110404 | BOLT, 3/8-16 X 1.75 |
| 4 | 6 | 110464 | BOLT, 1/4-20 X 1.0 |
| 5 | 2 | 110561 | BOLT, 1/4-20 X .75 |
| 6 | 2 | 110603 | NUT, 5/16-18 LOCK (NYLON) |
| 7 | 4 | 110618 | NUT, 3/8-16 LOCK NYLON INSERT |
| 8 | 2 | 110630 | NUT, 1/4-20 LOCK (NYLON INSERT) |
| 9 | 4 | 110658 | WASHER, 1/2" FLAT STANDARD |
| 10 | 6 | 110667 | WASHER, 1/4" LOCK |
| 11 | 2 | 112057 | U-BOLT, 1/4-20 X .75 |
| 12 | 1 | 132098 | QUICK SPLICER, 18-14 GA |
| 13 | 2 | 310029 | HANDLE GRIP, RUBBER |
| 14 | 1 | 311208 | SHAFT - CONTROL, FUNNEL DOOR |
| 15 | 2 | 311626 | BRACKET, SPRING |
| 16 | 1 | 311631 | GUIDE, DOOR |
| 17 | 1 | 311632 | DOOR, SLIDING |
| 18 | 1 | 312010 | SHOCK, GAS 8.27"-12.2" |
| 19 | 1 | 312011 | CLAMP, 8" ADJUSTABLE HOSE |
| 20 | 2 | 312012 | ROLLER, 3" |
| 21 | 12.5' | 312013 | HOSE, 8" REMOTE |
| 22 | 1 | 315234 | WELDMENT, FUNNEL DOOR |
| 23 | 1 | 315235 | LEVER, FUNNEL DOOR |
| 24 | 1 | 315236 | WELDMENT, REMOTE HOSE SUPPORT |
| 25 | 1 | 315237 | WELDMENT, REMOTE HOSE FUNNEL |
| 26 | 1 | 315238 | ADAPTER, REMOTE HOSE 8" |
| 27 | 1 | 315239 | WELDMENT, NOZZLE HANDLE |
| 28 | 1 | 315240 | WELDMENT, ADJUSTABLE HANDLE |
| 29 | 4 | 510112 | COTTER PIN, 3/16 X 1 |
| 30 | 2 | 710586 | SCREW, 1/4 X 1 TEK SELF-TAP |
| 31 | 1 | 910044 | COVER, VINYL .25 X 1.5 X 4 GRIP |
| 32 | 4 | 972018 | SPRING, COMPRESSION |

2/20/2013

# REMOTE HOSE OPTION

**HARPER PRT NO. 300048 - FACTORY INSTALL**
**HARPER PRT NO. 300049 - CUSTOMER INSTALL**

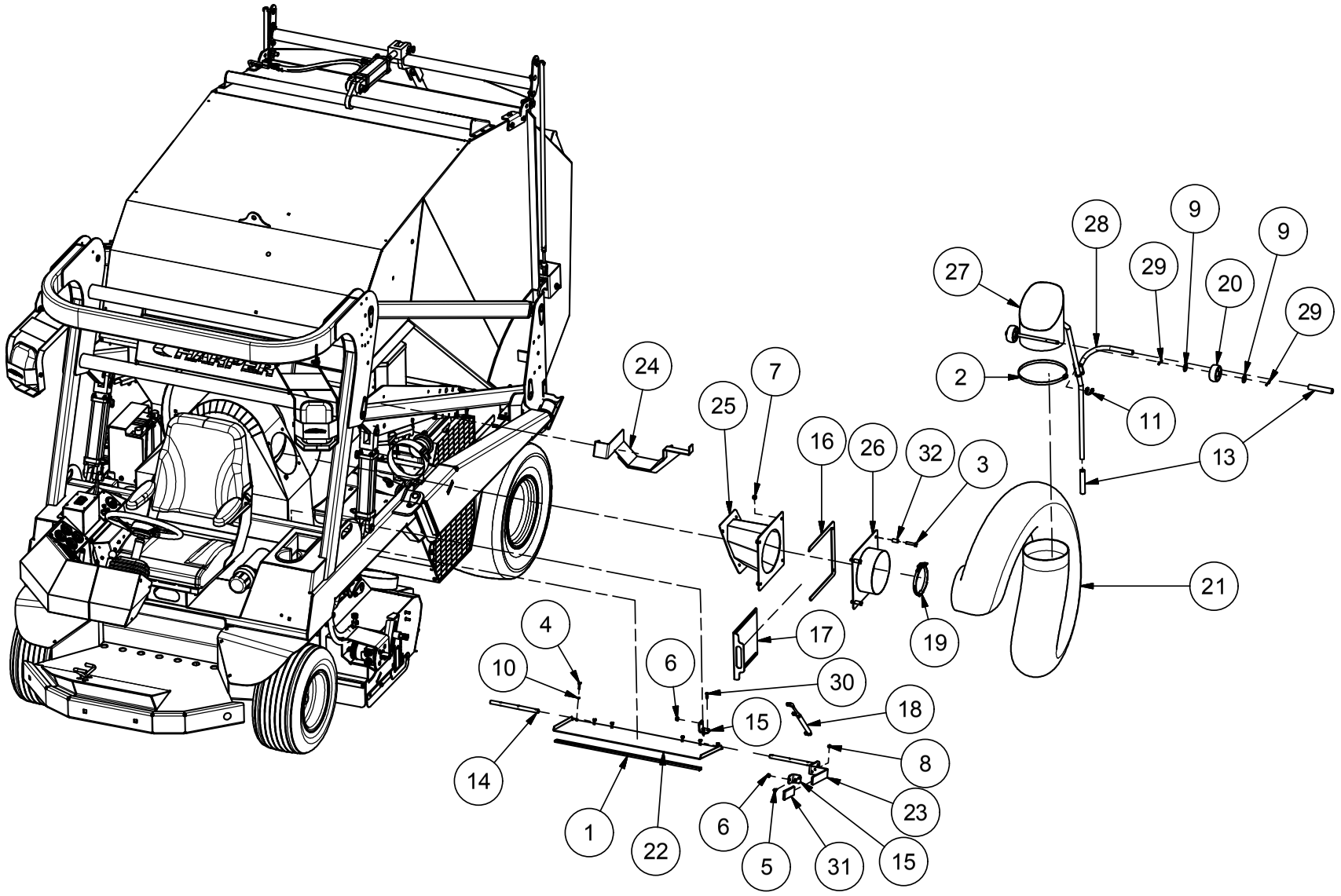


2/20/2013

# Kit, Curb Brush

Customer Install P/N: 300070
Factory Install P/N: 300071

| Parts List | | | |
|---|---|---|---|
| ITEM | QTY | PART # | DESCRIPTION |
| 1 | 5 | 100578 | CABLE TIE 14" BLACK 50 Lb Tens |
| 2 | 1 | 102022 | GRIP, VINLY 5/8"ID x 4.75" |
| 3 | 2 | 110020 | Bolt, 5/16-18 X 0.75 in Carriage |
| 4 | 3 | 110378 | BOLT, 5/16-18 X 2.0 |
| 5 | 2 | 110392 | Bolt, 3/8-16 X 2 in Carriage |
| 6 | 4 | 110400 | BOLT, 3/8-16 X 2.0 |
| 7 | 4 | 110420 | BOLT, 3/8-16 X 1.0 |
| 8 | 1 | 110444 | BOLT, 5/16-18 X 0.75, WIZ FLANGE |
| 9 | 1 | 110464 | BOLT, 1/4-20 X 1.0 |
| 10 | 2 | 110553 | BOLT, 1/2-13 X 2.5 TAP |
| 11 | 2 | 110603 | NUT, 5/16-18 LOCK (NYLON) |
| 12 | 4 | 110606 | NUT, 5/16-18 WIZ FLANGE |
| 13 | 2 | 110642 | NUT, 1/2-13 HEX JAM GR 2 |
| 14 | 2 | 110665 | WASHER, 5/16" FLAT STANDARD |
| 15 | 1 | 110667 | WASHER, 1/4" LOCK |
| 16 | 10 | 110672 | WASHER, 3/8" LOCK |
| 17 | 10 | 110676 | WASHER, 3/8" FLAT STANDARD |
| 18 | 4 | 110826 | NUT, 3/8-16 GR 2 |
| 19 | 2 | 120251 | ADAPTER, 10MJ-10MB |
| 20 | 2 | 120277 | ADAPTER, 8MJ-8MB |
| 21 | 1 | 120288 | ADAPTER, 8MJ-8MB90 |
| 22 | 1 | 120427 | ADAPTER, 8MJ-8FJX-8MJ |
| 23 | 2 | 302063 | KNOB, ALUMINUM 3/8-16 |
| 24 | 1 | 302064 | BRUSH, 24" x 6" x 40 DEG |
| 25 | 1 | 311640 | BRACKET, LATCH |
| 26 | 1 | 311647 | MOUNT, CURB BRUSH MOTOR |
| 27 | 1 | 311648 | LATCH, HANDLE |
| 28 | 1 | 312015 | PIN, 5/8" x 3.5" |
| 29 | 1 | 315241 | MOUNT, CURB BRUSH PIVOT |
| 30 | 1 | 315242 | MOUNT, CURB BRUSH FRAME |
| 31 | 1 | 315243 | MOUNT, CURB BRUSH TILT |
| 32 | 1 | 315244 | WELDMENT, CURB BRUSH HANDLE |
| 33 | 2 | 320272 | HOSE, VALVE TO CURB BRUSH |
| 34 | 1 | 320273 | HOSE, CURB BRUSH SUPPLY |
| 35 | 1 | 320337 | HOSE ASSY, CURB BRUSH RETURN |
| 36 | 1 | 322064 | MOTOR, EATON 101-1016-009 (22.1 CI) |

| Parts List | | | |
|---|---|---|---|
| ITEM | QTY | PART # | DESCRIPTION |
| 37 | 1 | 323035 | VALVE, CIRCUIT SELECTOR |
| 38 | 2 | 500156 | PIN, 1/8 x 2.375 COTTER |
| 39 | 1 | 970763 | WASHER, 1.50 X .320 |
| 40 | 1 | 975128 | BRUSH ADAPTOR WELDMENT |

3/7/2016

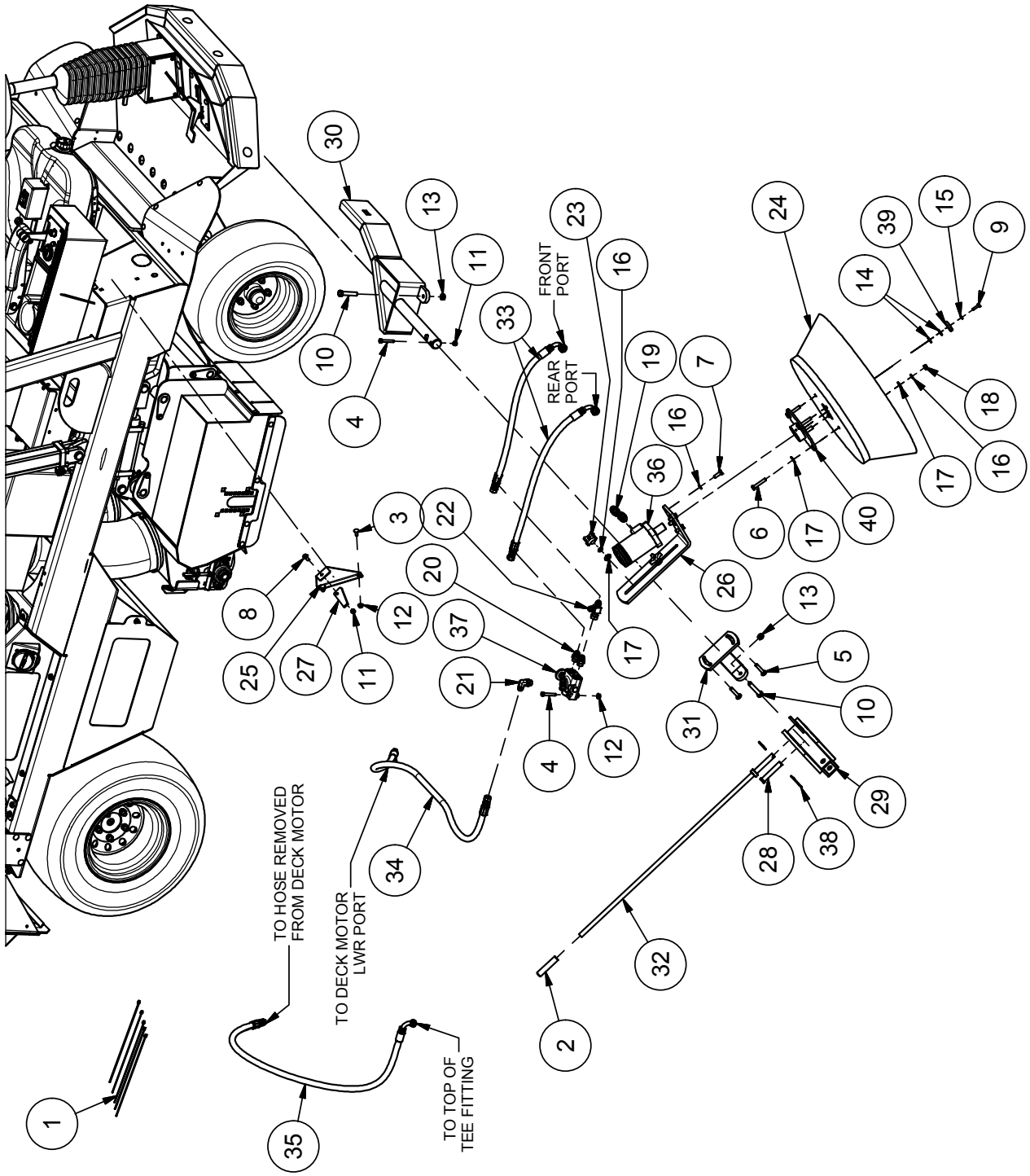
TO HOSE REMOVED FROM DECK MOTOR
TO DECK MOTOR LWR PORT
TO TOP OF TEE FITTING
FRONT PORT
REAR PORT

# Kit, Light

Customer Install P/N: 300072
Factory Install P/N: 300073

| Parts List | | | |
|---|---|---|---|
| ITEM | QTY | PART # | DESCRIPTION |
| 1 | 10 | 100578 | CABLE TIE, 14" BLACK |
| 2 | 16 | 110020 | Bolt, 5/16-18 X 0.75 in Carriage |
| 3 | 4 | 110117 | CLAMP, ADEL AC4 .265 HOLE |
| 4 | 4 | 110154 | Bolt, 1/4-20 X 0.75 in Carriage |
| 5 | 2 | 110345 | NUT, 8-32 NYLOCK |
| 6 | 1 | 110444 | BOLT, 5/16-18 X 3/4 WIZ FLANGE |
| 7 | 17 | 110606 | NUT, 5/16-18 WIZ FLANGE |
| 8 | 4 | 110630 | NUT, 1/4-20 LOCK (NYLON INSERT) |
| 9 | 8 | 110631 | NUT, 10-24 LOCK NYLON INSERT |
| 10 | 2 | 110709 | SCREW, 10-24 X 3/4 MACH RND HD SLT |
| 11 | 1 | 110728 | CLAMP, ADEL DOUBLE .75 X .5 X .406 |
| 12 | 4 | 110914 | SCREW, 10-24 X 1 1/2 RND PHLP |
| 13 | 6" | 130004 | WIRE, 14 GA BLACK |
| 14 | 7 | 130059 | CONNECTOR, 2 CAVITY DEUTSCH |
| 15 | 7 | 130061 | SECONDARY LOCK, DEUTSCH PLUG |
| 16 | 25 | 132055 | TERMINAL, CLOSED BARREL 18-16 |
| 17 | 3 | 132057 | CONNECTOR, 3 CAVITY DEUTSCH |
| 18 | 3 | 132058 | SECONDARY LOCK, DEUTSCH |
| 19 | 1 | 132072 | SWITCH - TURN SIGNAL |
| 20 | 1 | 132073 | SWITH - HAZARD |
| 21 | 1 | 132074 | FUSE BLOCK, MINI FUSE STYLE |
| 22 | 4 | 132075 | DIODE, MINI FUSE 1-AMP |
| 23 | 1 | 302035 | DECAL, HAZARD LIGHTS |
| 24 | 2 | 302037 | REFLECTOR - TAPE, RED |
| 25 | 2 | 302038 | REFLECTOR - TAPE, YELLOW |
| 26 | 4 | 311440 | GUARD - LIGHT |
| 27 | 1 | 332007 | HARNESS, LIGHT KIT RELAY |
| 28 | 1 | 332008 | HARNESS, LIGHT KIT ELECTRICAL |
| 29 | 2 | 332009 | LIGHT - STT/WARNING, RED/AMBER, LED |
| 30 | 2 | 332010 | LIGHT - WARNING, AMBER, LED |
| 31 | 2 | 332011 | LIGHT - WARNING, AMBER, RECT, LED |
| 32 | 2 | 510960 | SCREW, 10-24 X 1/2 RHSS |
| 33 | 2 | 511102 | SCREW, 8-32 X 3/4 SLOTTED |
| 34 | 2 | 532130 | LIGHT, WORK LAMP, LED |

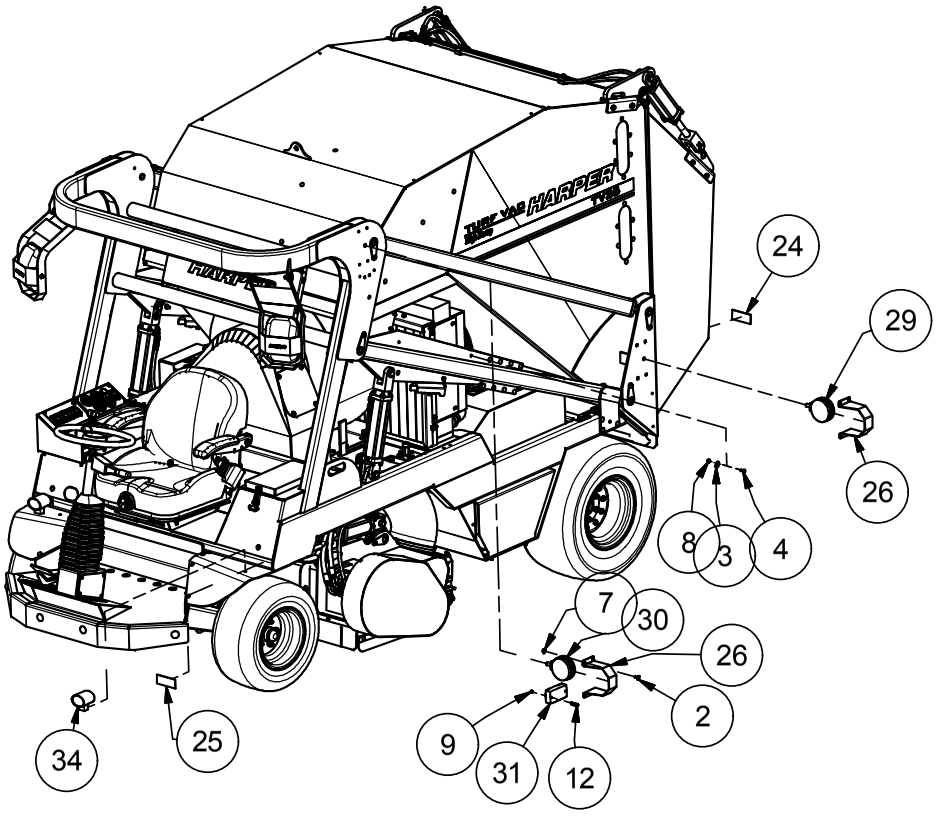


3/7/2016

# Kit, Backup Camera

Customer Install P/N: 300074
Factory Install P/N: 300075

| Parts List | | | |
|---|---|---|---|
| ITEM | QTY | PART # | DESCRIPTION |
| 1 | 10 | 100578 | CABLE TIE 14" BLACK 50 Lb Tens |
| 2 | 1 | 110020 | Bolt, 5/16-18 X 0.75 in Carriage |
| 3 | 6 | 110069 | WASHER, 5/16" FLAT SAE |
| 4 | 2 | 110074 | Hex Nut M6 X 1.0 Thd |
| 5 | 8 | 110117 | CLAMP, ADEL AC4 .265 HOLE |
| 6 | 3 | 110154 | Bolt, 1/4-20 X 0.75 in Carriage |
| 7 | 2 | 110290 | NUT, 1/4-20 WIZ FLANGE |
| 8 | 5 | 110358 | Bolt, 1/4-20 X 0.625 in Carriage |
| 9 | 2 | 110484 | BOLT, M6x1 x 16 Gr 10.9 |
| 10 | 2 | 110603 | NUT, 5/16-18 LOCK (NYLON) |
| 11 | 8 | 110630 | NUT, 1/4-20 LOCK (NYLON INSERT) |
| 12 | 2 | 110692 | WASHER, 6 mm LOCK |
| 13 | 2 | 110726 | CLAMP, ADEL .75WX.5IDx.406 HOLE |
| 14 | 1 | 130047 | CONNECTOR, 2 CAVITY, DEUTSCH DT (DT-04-2P) |
| 15 | 1 | 130048 | SECONDARY LOCK, DEUTSCH DT (W2P) |
| 16 | 2 | 132096 | Terminal, Solid Pin, 18-16 Deutsch |
| 17 | 1 | 302068 | CAMERA, BACKUP |
| 18 | 1 | 311674 | BRACKET, CAMERA MOUNTING |
| 19 | 2 | 710586 | SCREW, 1/4 X 1 TEK SELF-TAP |

## NOTES

Harper Industries, Inc.
151 E. Highway 160
Harper, KS 67058

Telephone: 620-896-7381
Toll-Free: 800-835-1042
Fax: 620-896-7129

Website: www.harperindustries.com

E-mail: info@harperindustries.com