TURBO VAC 35D

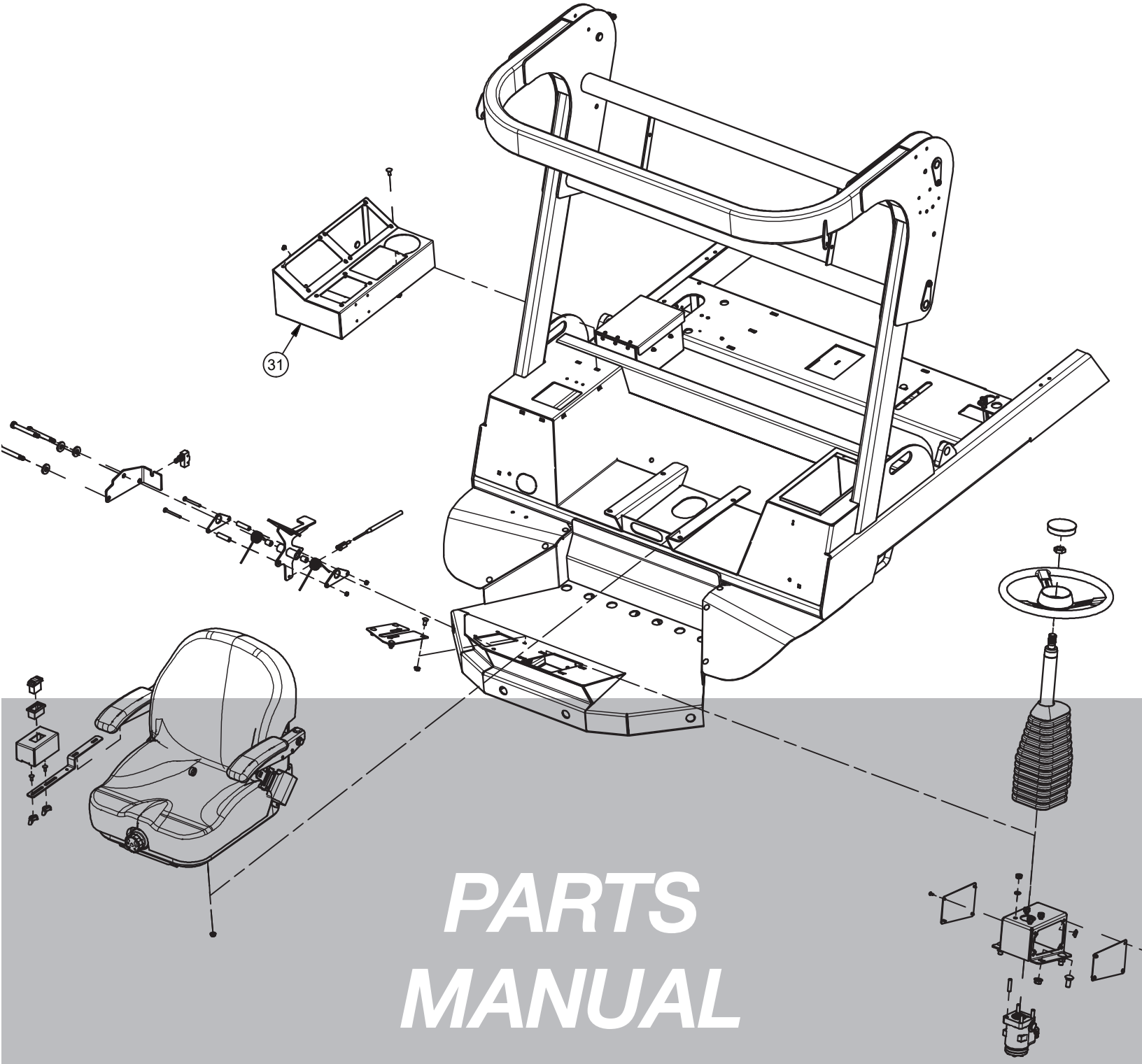

PARTS MANUAL

5-2021

HARPER INDUSTRIES INC

Thank you for purchasing a Harper Turf Vac.

As with all Harper products, the Turf Vac has been developed through tough design and testing procedures to produce a top quality machine. This manual gives assembly, operating, and service information for the model TV35 Turf Vac. Please read and understand all instructional material included with the Turf Vac or its components before assembling and operating the equipment.

A Turf Vac can present hazards to an operator who follows unsafe procedures in either the operation or maintenance of the unit. Therefore, **SAFETY WARNINGS** are presented at certain locations in the text.

THIS SYMBOL: ⚠ **SAFETY WARNING!** ⚠

MEANING: Failure to understand and obey this warning may result in injury to you or others. Whenever this symbol is used, please pay very close attention to the information presented, and make sure you fully understand. If you do not, contact your dealer or Harper Industries, Inc. for clarification.

⚠ **SAFETY WARNING!** ⚠

ALL SHIELDS AND GUARDS MUST BE IN PLACE FOR PROPER AND SAFE OPERATION OF THIS EQUIPMENT. WHERE THEY ARE SHOWN REMOVED IN THIS MANUAL, IT IS FOR PURPOSES OF ILLUSTRATION AND INSTRUCTION ONLY. DO NOT OPERATE THIS EQUIPMENT UNLESS ALL SHIELDS AND GUARDS ARE IN PLACE.

Harper Industries, Inc. is continually striving to improve the design and performance of its products. We reserve the right to make changes in specifications and design without thereby incurring any obligation relative to previously manufactured products.

© 2021 Harper Industries, Inc.
The Harper name is a registered trademark of Harper Industries, Inc. All other brand and product names are trademarks or registered trademarks of their respective companies.

LIMITED WARRANTY

Harper Industries, Inc. (HII) warrants to each purchaser of a new Harper Turf Vac from an authorized dealer or representative, that such equipment is free of manufacturer's defects in workmanship and materials which appear while in normal service for a period of ONE YEAR commencing with delivery to the original user.

The obligation of HII under this warranty is expressly limited, at our option, to replacement or repair at a service facility designated by Harper Industries or at the manufacturing plant in Harper, KS. A part will be replaced after inspection discloses it to have been defective. This warranty does not apply to defects caused by damage or unreasonable use (including failure to provide reasonable and necessary maintenance, or by performing functions without genuine Harper Turf Vac accessories) while in the possession of the consumer.

Warranty is limited to parts, labor and ground freight delivery of replacement parts. HII shall not be liable for the consequential damages of any kind, including but not limited to consequential labor costs or transportation charges in connection with replacement or repair of defective parts.

This warranty does not apply to parts subjected to misuse, abuse, alteration, improper or inadequate maintenance, or normal wear (including (belts, chains, filters, knives, brush and broom).

Engines are not covered under this warranty. Refer to manufacturer's warranty for specific warranty information. Harper Industries, its agents or representatives, make or imply no other warranties.

Harper Industries makes no warranty with respect to trade accessories. They are subject to the warranties of their respective manufacturers.

ANY IMPLIED OR STATUTORY WARRANTIES, INCLUDING ANY WARRANTY OR MERCHANTABILITY OR FITNESS FOR A PARTICULAR PURPOSE, ARE EXPRESSLY LIMITED TO THE DURATION OF THIS WRITTEN WARRANTY. HII makes no other express warranty, nor is anyone authorized to make any on behalf of HII.

For further information please contact your nearest Harper Turf Vac dealer.

RECORDS

Date of Purchase _____ / _____ / _____

Dealer's Name _____

Dealer's Phone _____

Serial Number Machine _____

Serial Number Engine _____

Table of Contents

PARTS SECTION
Table of Contents
Frame and Engine
Frame Assembly..... 1.1
Tank Installation..... 1.2
Front Axle Installation..... 1.3
Front Axle Assembly..... 1.4
Deck Assembly..... 1.5
Deck Installation..... 1.6
Diesel Engine Assembly..... 1.7
Diesel Engine Installation..... 1.8
Fuel Components..... 1.9
Fuel Lines..... 1.10
Operator Station Assembly..... 1.11
Console Assembly..... 1.12
Electrical Assembly..... 1.13
Fan Housing Assembly..... 1.14
Fan Housing Installation..... 1.15
Radiator/Oil Cooler Installation..... 1.16
Hopper and Door Assembly..... 1.17
Hopper Installation..... 1.18
Wheel & Shield Installation..... 1.19
Decals..... 1.20
Hydraulic
Hydraulic Reservoir Assembly..... 2.1
Propulsion Circuit (Low Range)..... 2.2
Propulsion Circuit (Hi Range)..... 2.3
Propulsion System..... 2.4
Propulsion Pump & Wheel Motor Assemblies.. 2.5
Propulsion Valve & Loop Flush Valve Assy..... 2.6
Propulsion Pump Plumbing..... 2.7
Wheel Motor Plumbing..... 2.8
Machine System..... 2.9
Machine Circuits..... 2.10
Triple Section Pump Assembly..... 2.11
Triple Section Pump Plumbing..... 2.12
Deck Plumbing..... 2.13
Fan Plumbing..... 2.14
Fan & Deck Valve Assembly..... 2.15
Steering Plumbing..... 2.16
Cylinder Control Valve Assy & Plumbing..... 2.17
Hopper Plumbing..... 2.18
Cooling Fan Plumbing..... 2.19
Electrical
Wiring Schematic Diagram Overview..... 3.1
Master Harness..... 3.2
Relay Harness..... 3.3
Eng Relay Harness..... 3.4
Engine Harness/Pos Battery Cable..... 3.5
Hydraulic Valves Electrical Assembly..... 3.6
Cooling Package Electrical Assembly..... 3.7
Options
Brush Rotor..... 4.1
Rubber Finger Rotor..... 4.2
Verticut w/ Fingers Rotor..... 4.3
Canopy..... 4.4
Hopper Dump Extension..... 4.5
Remote Hose..... 4.6
Curb Brush..... 4.7
Light Kit..... 4.8
Backup Camera Kit..... 4.9

Frame Assembly

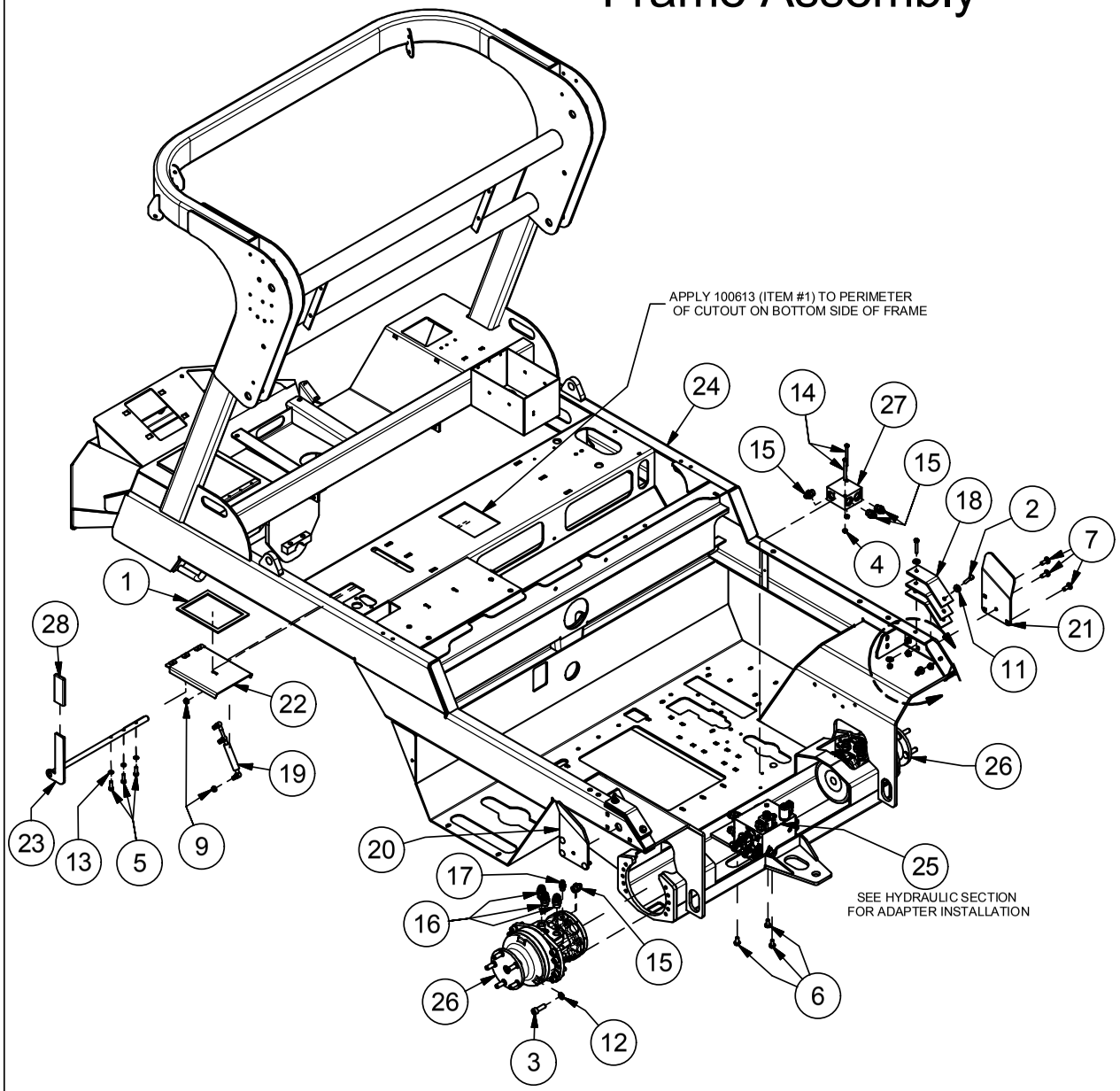

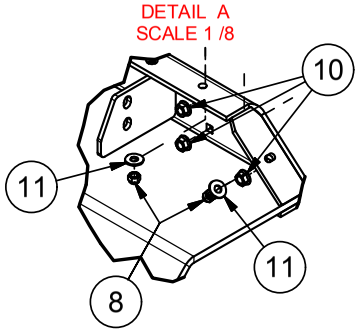

Parts List		
ITEM	PART #	DESCRIPTION
1	100613	SEAL, RUBBER .50 X .187
2	110017	BOLT, 5/16-18 X 1.75
3	110244	BOLT, 1/2-13 X 1.5 SHCS
4	110290	NUT, 1/4-20 WIZ FLANGE
5	110423	BOLT, 5/16-18 X 1.0
6	110437	BOLT, 3/8-16 X 0.75, WIZ FLANGE
7	110556	Bolt, 3/8-16 X 1 in Carriage
8	110603	NUT, 5/16-18 LOCK (NYLON)
9	110606	NUT, 5/16-18 WIZ FLANGE
10	110645	NUT, 3/8-16 WIZ FLANGE
11	110665	WASHER, 5/16" FLAT STANDARD
12	110666	WASHER, 1/2" LOCK
13	110674	WASHER, 5/16" LOCK
14	110844	BOLT, 1/4-20 X 3
15	120239	ADAPTER, 6MJ-8MB
16	120251	ADAPTER, 10MJ-10MB
17	120319	ADAPTER, 6MJ-6MB
18	302019	PAD - LIFT ARM
19	302083	SPRING, 40LB GAS
20	311189	GUIDE - LINKAGE, HOPPER, LH
21	311190	GUIDE - LINKAGE, HOPPER, RH
22	315263	WELDMENT, CLEANOUT DOOR
23	315264	WELDMENT, CLEANOUT LEVER
24	315280	FRAME WELDMENT, TV30
25	323008	VALVE, TV30 PROPULSION CONTROL
26	323034	MOTOR, POCLAIN HYD WHEEL
27	323053	VALVE, LOOP FLUSH
28	910044	COVER, VINYL .25 X 1.5 X 4 GRIP

3/23/2016

TANK INSTALLATION

Parts List		
ITEM	PART #	DESCRIPTION
1	100613	SEAL, RUBBER .50 X .187
2	110437	BOLT, 3/8-16 X 0.75, WIZ FLANGE
3	110529	BOLT, 5/16-18 X 4.5
4	110538	BOLT, 5/16-18 X 3.0
5	110556	Bolt, 3/8-16 X 1 in Carriage
6	110603	NUT, 5/16-18 LOCK (NYLON)
7	110606	Nut, 5/16-18, Wiz Flng
8	110645	NUT, 3/8-16 WIZ FLANGE
9	110824	BOLT, U-, 5/16-18 X 2-1/2 X 3-3/16
10	112053	SCREW, 10-32 X 1/2 MACH SEAL
11	120082	PLUG, 6MP HEX HEAD
12	120378	ADAPTER, 5HB-6FBX
13	120384	ADAPTER, 5BH-4MP90
14	311909	BRKT, INTAKE TUBE SUPPORT
15	315278	Hydraulic Tank, T4F
16	315305	Fuel Tank, TV35 T4F
17	323045	VALVE, COOLING FAN MANIFOLD
18	332057	FUEL LEVEL SENDER
19	500172	GASKET, FUEL SENDER
20	500209	FITTING, REDUCER 3/8 X 1/4 NPT
21	802023	VALVE, FUEL SHUT OFF 6MB-4MP
22	820158	DECK VALVE

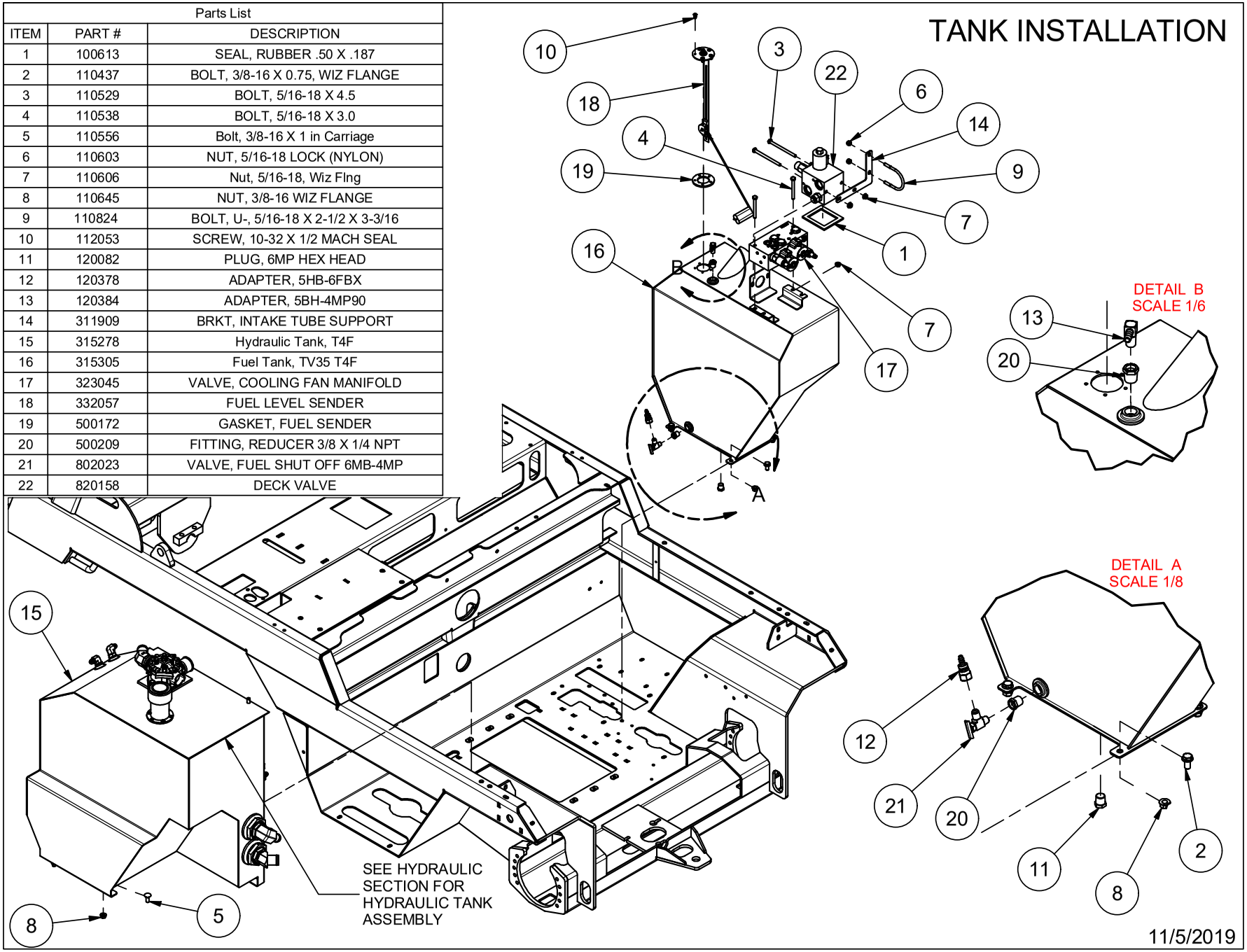

HARPER TURF EQUIPMENT

Front Axle Assembly

342004 Service Parts			
ITEM	QTY	PART #	DESCRIPTION
A	1	312001	GREASE CAP
B	1	312002	GREASE SEAL
C	5	312003	STUD - WHEEL, 1/2-20 NF
D	1	312004	HUB - 5 ON 4.5, 1750 LBS
E	1	312005	OUTER RACE
F	1	312006	OUTER BEARING
G	1	312007	INNER RACE
H	1	312008	INNER BEARING

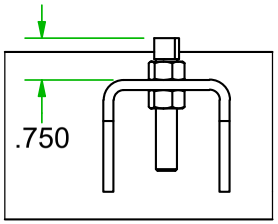

STEERING STOP SETTING

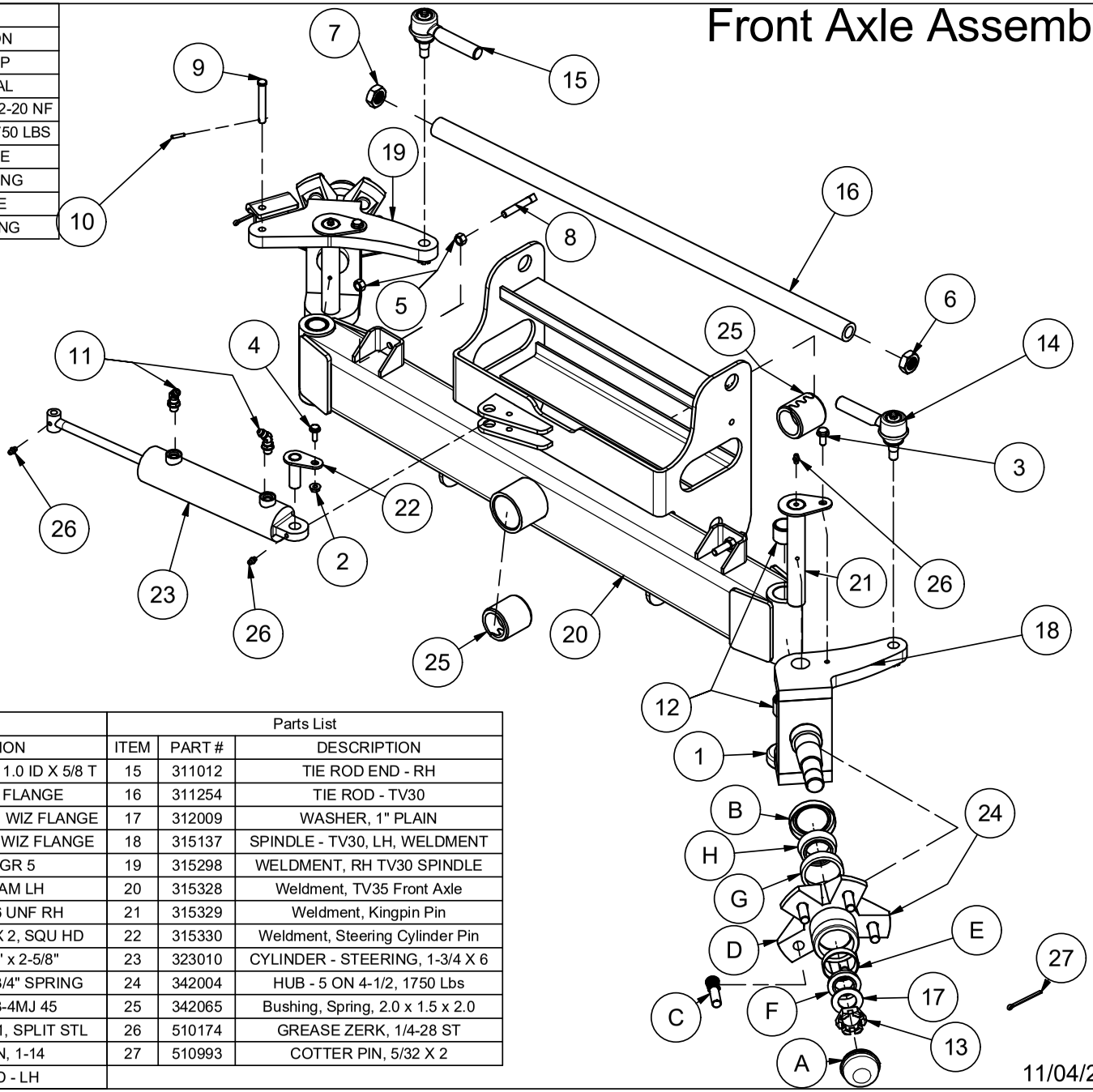

Parts List			Parts List		
ITEM	PART #	DESCRIPTION	ITEM	PART #	DESCRIPTION
1	102043	BEARING - THRUST, 1.0 ID X 5/8 T	15	311012	TIE ROD END - RH
2	110290	NUT, 1/4-20 WIZ FLANGE	16	311254	TIE ROD - TV30
3	110444	BOLT, 5/16-18 X 0.75, WIZ FLANGE	17	312009	WASHER, 1" PLAIN
4	110468	BOLT, 1/4-20 X 0.75, WIZ FLANGE	18	315137	SPINDLE - TV30, LH, WELDMENT
5	110826	NUT, 3/8-16 GR 5	19	315298	WELDMENT, RH TV30 SPINDLE
6	110891	NUT, 3/4-16 JAM LH	20	315328	Weldment, TV35 Front Axle
7	110892	NUT, JAM 3/4-16 UNF RH	21	315329	Weldment, Kingpin Pin
8	110921	SET SCREW - 3/8 X 2, SQU HD	22	315330	Weldment, Steering Cylinder Pin
9	112110	CLEVIS PIN, 3/8" x 2-5/8"	23	323010	CYLINDER - STEERING, 1-3/4 X 6
10	112111	ROLL PIN, 5/32" x 3/4" SPRING	24	342004	HUB - 5 ON 4-1/2, 1750 Lbs
11	120027	ADAPTER, 4MB-4MJ 45	25	342065	Bushing, Spring, 2.0 x 1.5 x 2.0
12	200082	BUSHING, 1.25X1X1, SPLIT STL	26	510174	GREASE ZERK, 1/4-28 ST
13	310261	NUT - CROWN, 1-14	27	510993	COTTER PIN, 5/32 X 2
14	311011	TIE ROD END - LH			

Front Axle Installation

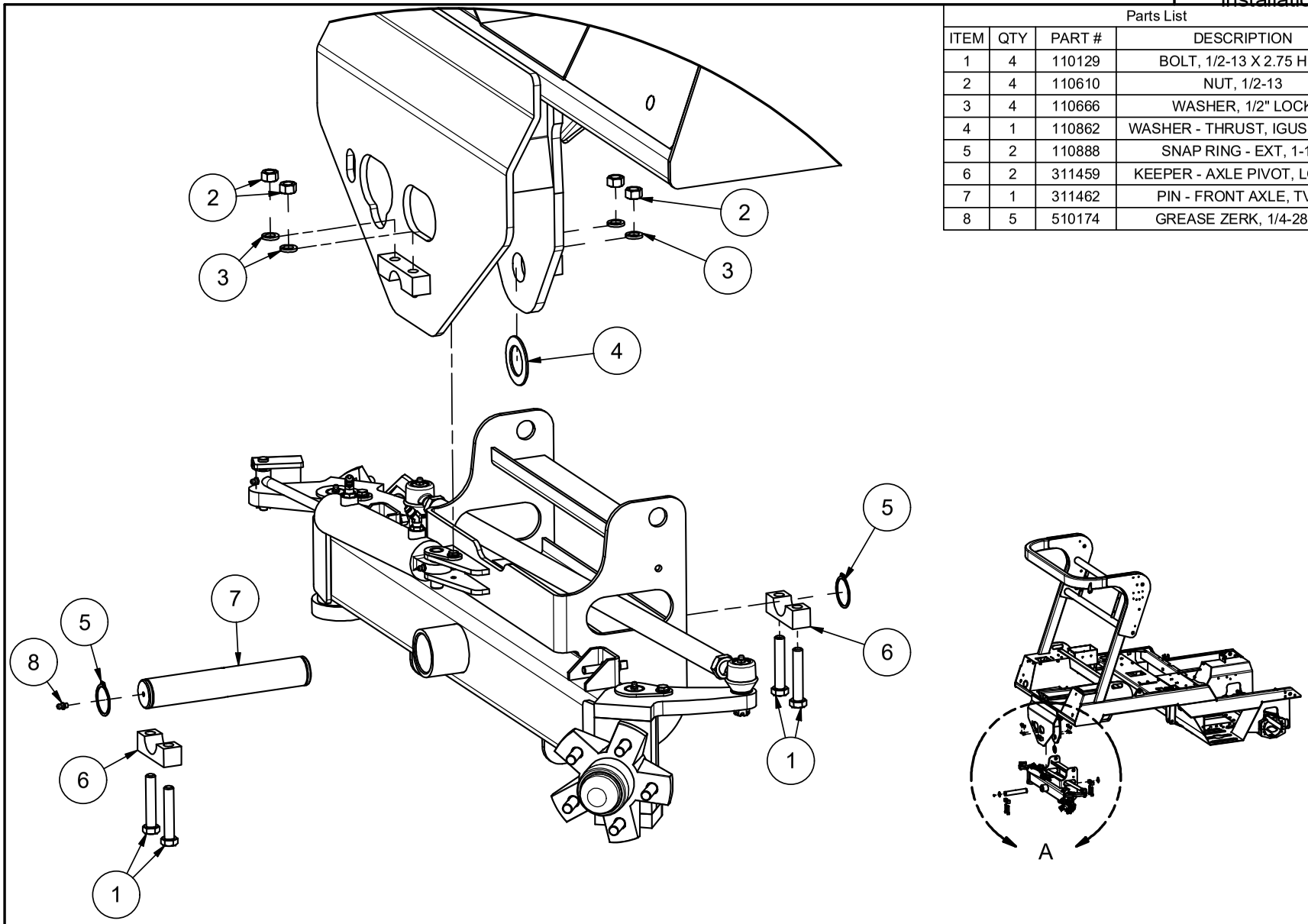

Parts List			
ITEM	QTY	PART #	DESCRIPTION
1	4	110129	BOLT, 1/2-13 X 2.75 HEX
2	4	110610	NUT, 1/2-13
3	4	110666	WASHER, 1/2" LOCK
4	1	110862	WASHER - THRUST, IGUS MTI-24
5	2	110888	SNAP RING - EXT, 1-1/2
6	2	311459	KEEPER - AXLE PIVOT, LOWER
7	1	311462	PIN - FRONT AXLE, TV30
8	5	510174	GREASE ZERK, 1/4-28 ST

11/5/2019

HARPER TURF EQUIPMENT

Deck Assembly

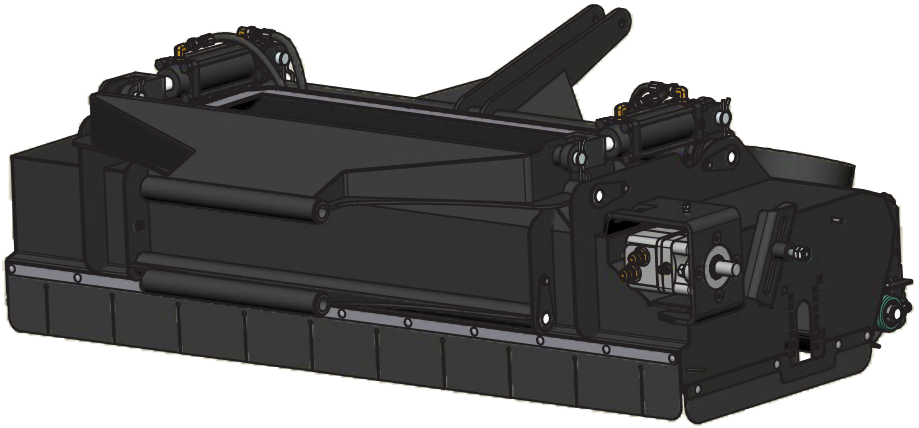

ITEM	PART #	DESCRIPTION
1	100365	MOLDING - EDGE GUARD, 5/32
2	110020	Bolt, 5/16-18 X 0.75 in Carriage
3	110039	NUT, 5/8-11 JAM
4	110154	Bolt, 1/4-20 X 0.75 in Carriage
5	110290	NUT, 1/4-20 WIZ FLANGE
6	110358	Bolt, 1/4-20 X 0.625 in Carriage
7	110444	BOLT, 5/16-18 X 0.75, WIZ FLANGE
8	110474	BOLT, 1/4-20 X 1-1/2
9	110581	BOLT, 3/8-16 X 4.5 TAP
10	110606	NUT, 5/16-18 WIZ FLANGE
11	110610	NUT, 1/2-13
12	110666	WASHER, 1/2" LOCK
13	110667	WASHER, 1/4" LOCK
14	110672	WASHER, 3/8" LOCK
15	110826	NUT, 3/8-16 GR 5
16	110895	Bolt, 5/8-11 X 3 in Carriage
17	110916	Bolt, 3/8-16 X 1.5 in Carriage
18	111045	Bolt, 1/2-13 x 1.75 FHCS
19	120251	ADAPTER, 10MJ-10MB
20	120665	ADAPTER, 6MJ-4MB
21	302018	SKIRT - DECK, RUBBER, FRONT
22	302049	SCRAPER, DECK ROLLER RUBBER
23	302084	SKIRT, DECK SIDE
24	311370	SPACER - IDLER
25	311382	BAFFLE - DECK, RETURN AIR
26	311383	RETAINER - DECK SKIRT, FRONT
27	311389	BRACKET - ROLLER ADJUSTMENT, DECK
28	311391	BRACKET - ROLLER ADJUSTMENT, BEARING
29	311528	RETAINER, DECK ROLLER SCRAPER
30	311741	RETAINER, DECK SKIRT
31	315108	LINKAGE - DECK MOUNT, UPPER, WELDMENT
32	315112	LIFT - DECK, REAR, WELDMENT
33	315160	PIN - DECK, LOWER, WELDMENT
34	315161	PIN - DECK, WELDMENT
35	315193	LINKAGE - DECK MOUNT, LOWER, WELDMENT
36	315197	ROLLER - TV30 DECK, WELDMENT
37	315258	WELDMENT, ROLLER SCRAPER
38	315271	WELDMENT, TV30 DECK
39	320251	HOSE - DECK, LEFT FRONT
40	320253	HOSE - DECK, RIGHT FRONT
41	320266	HOSE - DECK, LEFT REAR
42	320267	HOSE DECK, RIGHT REAR
43	323018	CYLINDER - 2 x 4, SAE-6, TIE ROD
44	342008	BEARING - 1", 2 - BOLT FLNG, MED DUTY

Parts List

ITEM	PART #	DESCRIPTION
45	500231	GREASE ZERK, 1/4-28 45deg
46	522104	DOUBLE HOSE CLAMP
47	522105	DOUBLE COVERPLATE
48	800124	BUSHING, MFI-1620-24
49	923014	MOTOR, 4.9 CID

Parts List

7/13/2016

Deck Assembly

7/13/2016

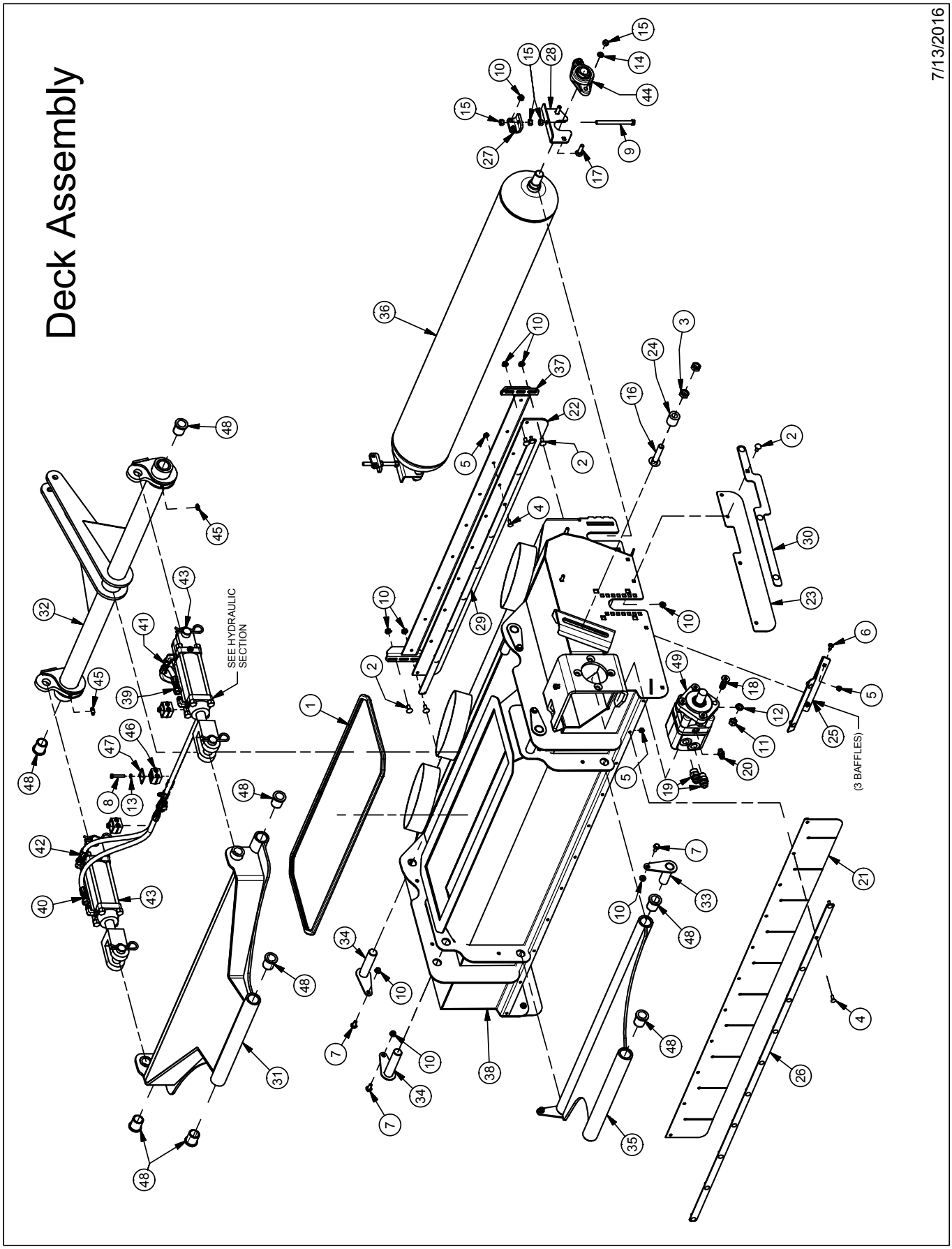

Deck Installation

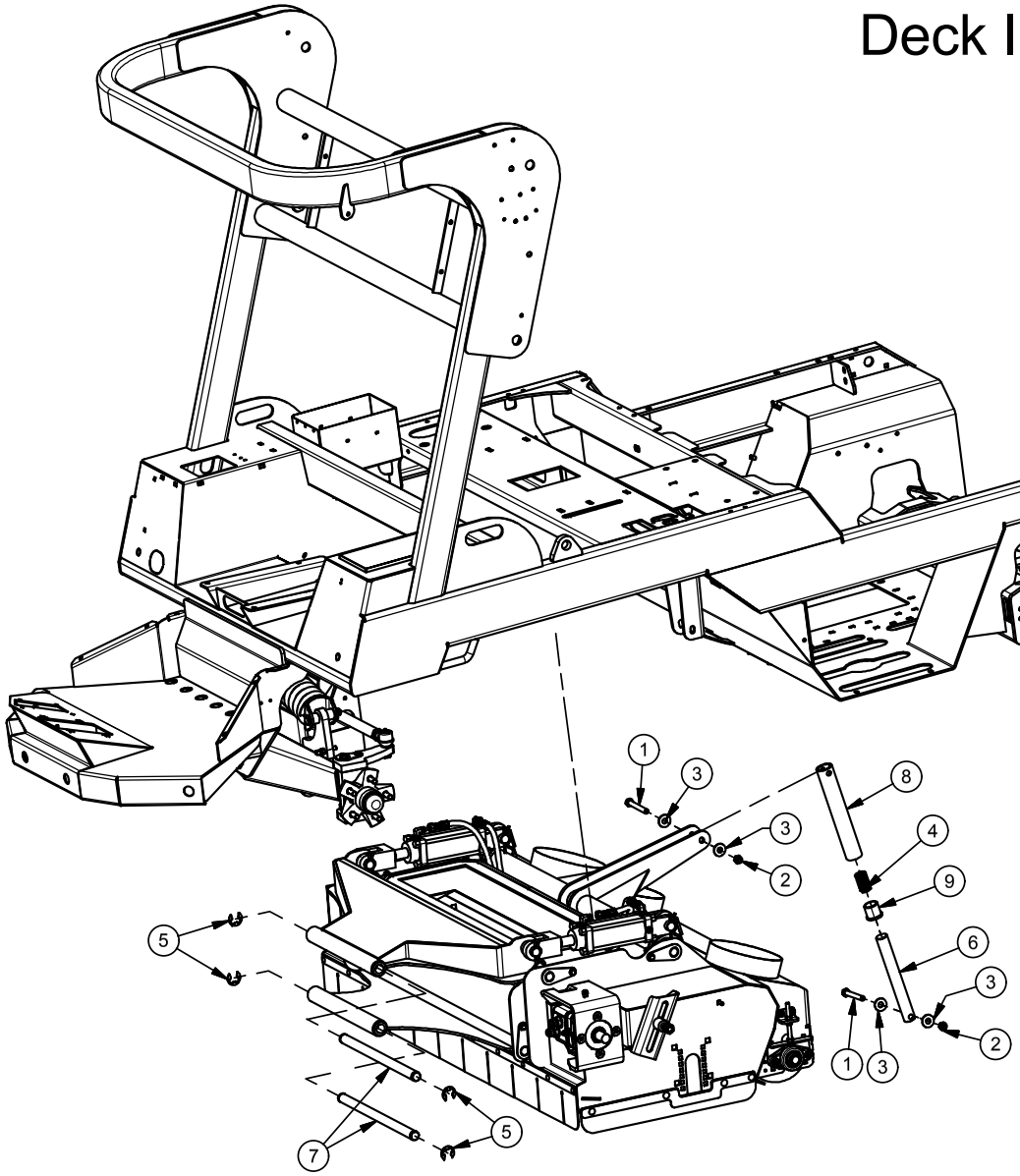

Parts List		
ITEM	PART #	DESCRIPTION
1	110003	BOLT, 1/2-13 X 4.0
2	110615	NUT, 1/2-13, UNITORQUE LOCK
3	110658	WASHER, 1/2" FLAT STANDARD
4	110861	SPRING - COMPRESSION, 1-3/16 OD X 2. L, K 800
5	110913	RETAINING RING, 1" EXT E
6	311133	ROD - LIFT LINK
7	311679	PIN, DECK MOUNT
8	315113	TUBE - LIFT LINK, WELDMENT
9	800129	BUSHING, IGUS MFI-2024-24

7/14/2016

DIESEL ENGINE ASSEMBLY

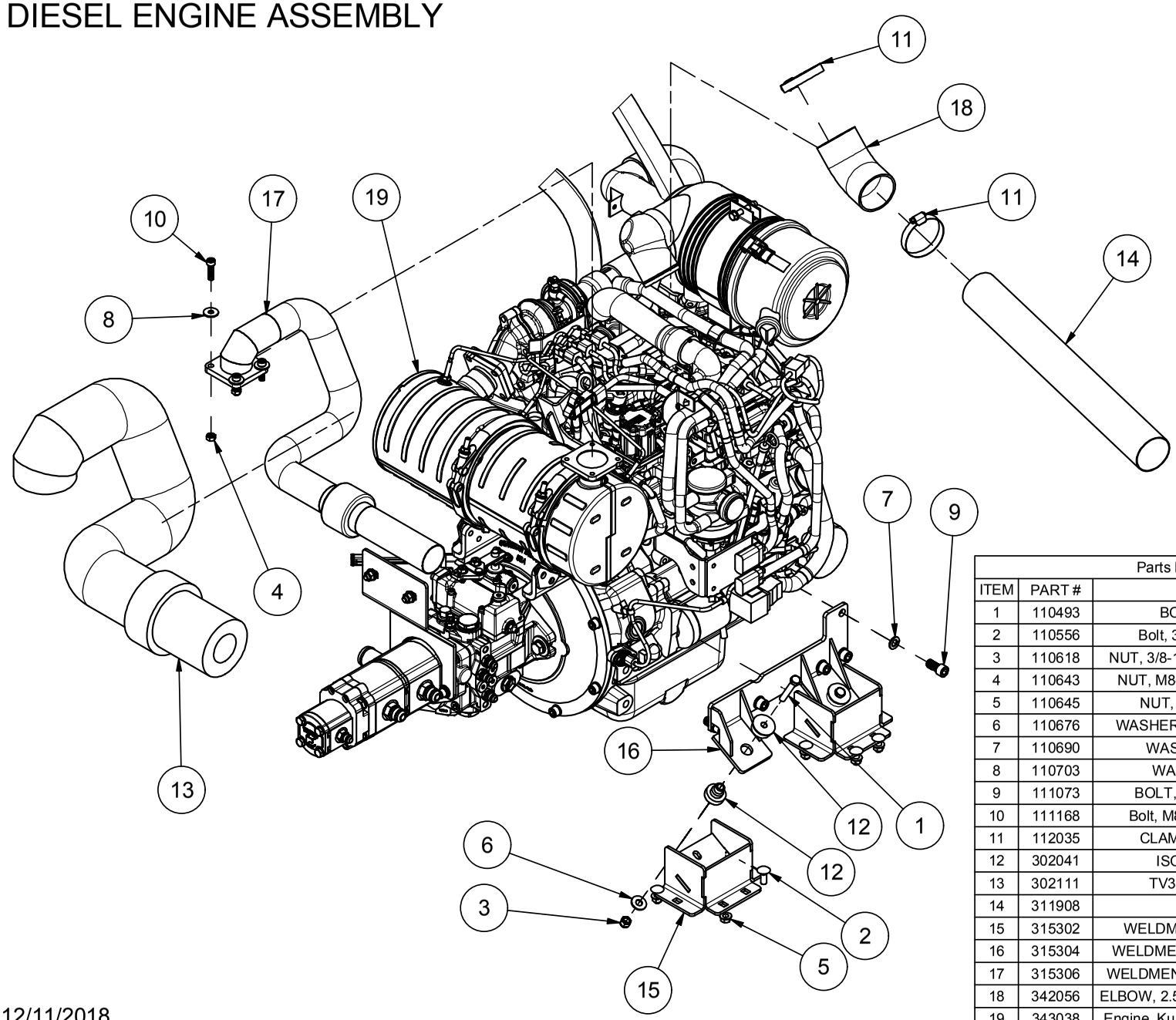

Parts List		
ITEM	PART #	DESCRIPTION
1	110493	BOLT, 3/8-16 X 2.25
2	110556	Bolt, 3/8-16 X 1 in Carriage
3	110618	NUT, 3/8-16 LOCK NYLON INSERT
4	110643	NUT, M8-1.25, HEX GR 8.8 ZINC
5	110645	NUT, 3/8-16 WIZ FLANGE
6	110676	WASHER, 3/8" FLAT STANDARD
7	110690	WASHER, 12 mm LOCK
8	110703	WASHER, 8 mm FLAT
9	111073	BOLT, M12-1.25 x 25 SHCS
10	111168	Bolt, M8-1.25 x 30, SHCS, Zin
11	112035	CLAMP, HOSE #40 2.375"
12	302041	ISOLATOR - MOUNT
13	302111	TV35D Exhaust Blanket
14	311908	TUBE, INTAKE
15	315302	WELDMENT, ENGINE MOUNT
16	315304	WELDMENT, RH MOTOR MOUNT
17	315306	WELDMENT, TV35D T4F EXHAUST
18	342056	ELBOW, 2.50 x 2.50 45 DEG RUBBER
19	343038	Engine, Kubota, D1803 Diesel Tier 4F

12/11/2018

DIESEL ENGINE ASSEMBLY

Parts List		
ITEM	PART #	DESCRIPTION
1	110155	WASHER, 3/8" FLAT SAE
2	110178	BOLT, 3/8-16 X 1.5 SHCS
3	110295	BOLT, M10x1.5 x 30 SHCS
4	110366	BOLT, 3/8-16 X 4.0
5	110419	BOLT, 1/2-13 X 1.75
6	110444	Bolt, 5/16-18 X 0.75 Wix Flng Gr 5 Zinc
7	110493	BOLT, 3/8-16 X 2.25
8	110555	BOLT, M10-1.25 X 30 HHCS, 10.9, ZINC
9	110556	Bolt, 3/8-16 X 1 in Carriage
10	110606	Nut, 5/16-18, Wiz Flng
11	110618	NUT, 3/8-16 LOCK NYLON INSERT
12	110645	NUT, 3/8-16 WIZ FLANGE
13	110658	WASHER, 1/2" FLAT STANDARD
14	110666	WASHER, 1/2" LOCK
15	110672	WASHER, 3/8" LOCK
16	110676	WASHER, 3/8" FLAT STANDARD
17	110689	WASHER, 10mm LOCK
18	110690	WASHER, 12 mm LOCK
19	111073	BOLT, M12-1.25 x 25 SHCS
20	301004	HOSE, UPPER RADIATOR INLET
21	301005	HOSE, LOWER RADIATOR OUTLET
22	302017	CLEVIS - THROTTLE
23	302041	ISOLATOR - MOUNT
24	311832	BRACKET, PUMP CONTROL
25	311892	BRACKET, PUMP SUPPORT
26	311906	COVER, AUX PAD A-MOUNT
27	315302	WELDMENT, ENGINE MOUNT
28	315303	WELDMENT, LH MOTOR MOUNT
29	322093	GASKET, AUX PAD A-MOUNT
30	342052	BELL HOUSING, SAE #5 X SAE B 2-BOLT
31	342053	Flywheel, D1803 Flange
32	342054	Hub, SAE B 13T Splined
33	343038	Engine, Kubota, D1803 Diesel Tier 4F
34	511084	CLAMP, HOSE #28 1.75"

343038 Service Parts	
PART #	DESCRIPTION
342057	Fuel Filter, Kubota D1803
342058	Fuel Pump, Kubota D1803
342059	Fuel Check Valve, Kubota D1803
342060	Display, Murphy PV480
342061	Element, Water Seperator, Kubota D1803
342062	Engine Oil Filter, Kubota D1803
342063	Air Filter, Outer, Kubota D1803
342064	Air Filter, Inner, Kubota D1803
342066	D1803 Exhasut Gasket

12/11/2018

DIESEL ENGINE ASSEMBLY

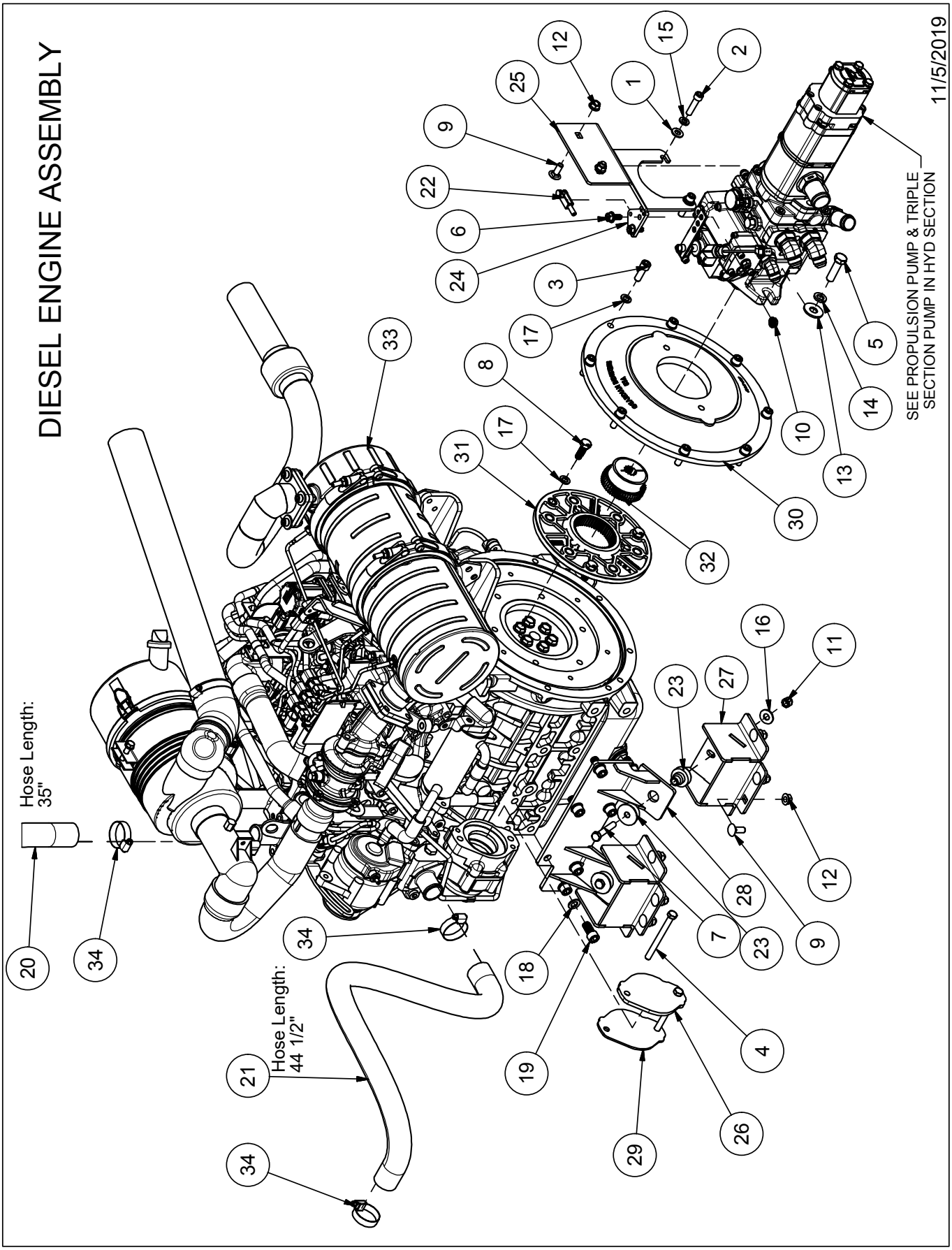

DIESEL ENGINE INSTALLATION

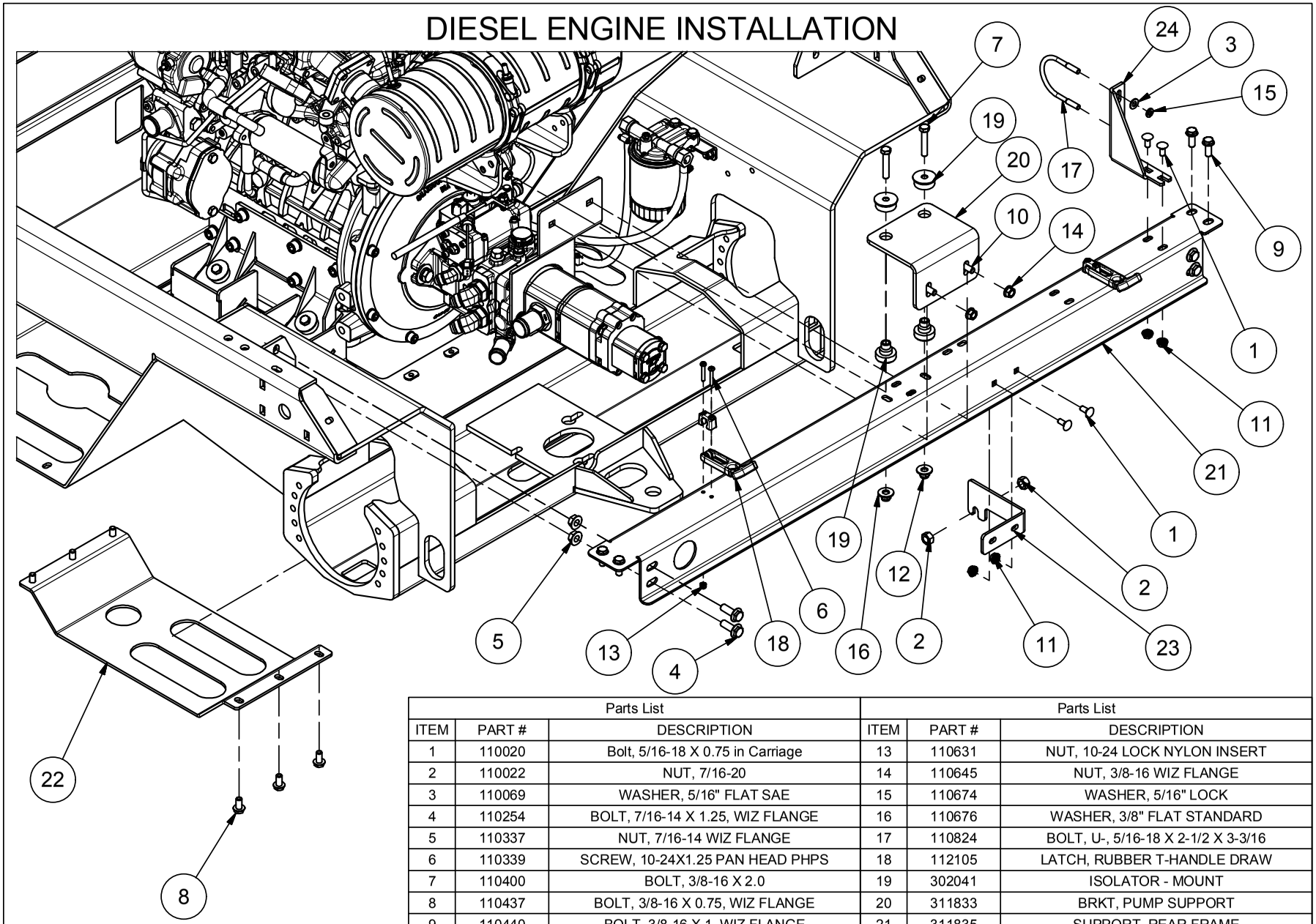

Parts List			Parts List		
ITEM	PART #	DESCRIPTION	ITEM	PART #	DESCRIPTION
1	110020	Bolt, 5/16-18 X 0.75 in Carriage	13	110631	NUT, 10-24 LOCK NYLON INSERT
2	110022	NUT, 7/16-20	14	110645	NUT, 3/8-16 WIZ FLANGE
3	110069	WASHER, 5/16" FLAT SAE	15	110674	WASHER, 5/16" LOCK
4	110254	BOLT, 7/16-14 X 1.25, WIZ FLANGE	16	110676	WASHER, 3/8" FLAT STANDARD
5	110337	NUT, 7/16-14 WIZ FLANGE	17	110824	BOLT, U-, 5/16-18 X 2-1/2 X 3-3/16
6	110339	SCREW, 10-24X1.25 PAN HEAD PHPS	18	112105	LATCH, RUBBER T-HANDLE DRAW
7	110400	BOLT, 3/8-16 X 2.0	19	302041	ISOLATOR - MOUNT
8	110437	BOLT, 3/8-16 X 0.75, WIZ FLANGE	20	311833	BRKT, PUMP SUPPORT
9	110440	BOLT, 3/8-16 X 1, WIZ FLANGE	21	311835	SUPPORT, REAR FRAME
10	110556	Bolt, 3/8-16 X 1 in Carriage	22	311890	PLATE, SKID
11	110606	Nut, 5/16-18, Wiz Flng	23	311903	BRKT, PUSH/PULL CABLE
12	110618	NUT, 3/8-16 LOCK NYLON INSERT	24	311907	BRKT, EXHAUST SUPPORT

04/10/2018

DIESEL ENGINE INSTALLATION

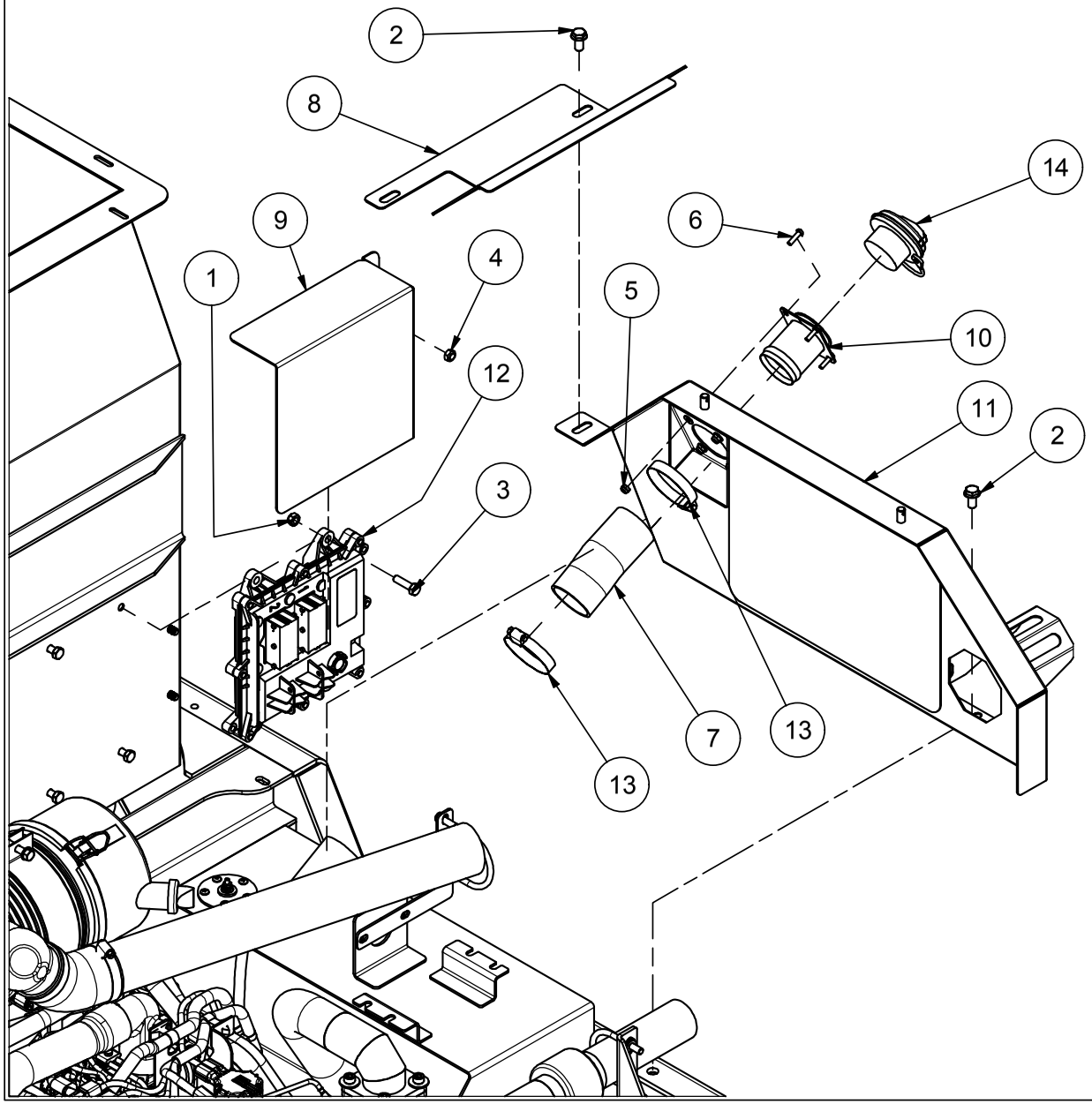

Parts List		
ITEM	PART #	DESCRIPTION
1	110230	NUT, M8 X 1.25, LOCK NYLON
2	110437	BOLT, 3/8-16 X 0.75, WIZ FLANGE
3	110486	BOLT, M8x1.25 x 30 Gr 10.9
4	110600	NUT, 5/16-18, UNITORQUE LOCK
5	110631	NUT, 10-24 LOCK NYLON INSERT
6	110709	SCREW, 10-24 X 0.75, RHMS
7	301006	Hose, TV35 Fuel Inlet
8	311917	AIR CLEANER DOOR
9	311919	ECU Shield, D1803
10	315301	WELDMENT, DIESEL FILLER NECK
11	315309	WELDMENT, RH ENGINE SHIELD
12	343038	Engine ECU, Included With Engine
13	511003	CLAMP, HOSE #36 2.25"
14	970788	FUEL CAP, 2"

04/10/2018

FUEL COMPONENTS

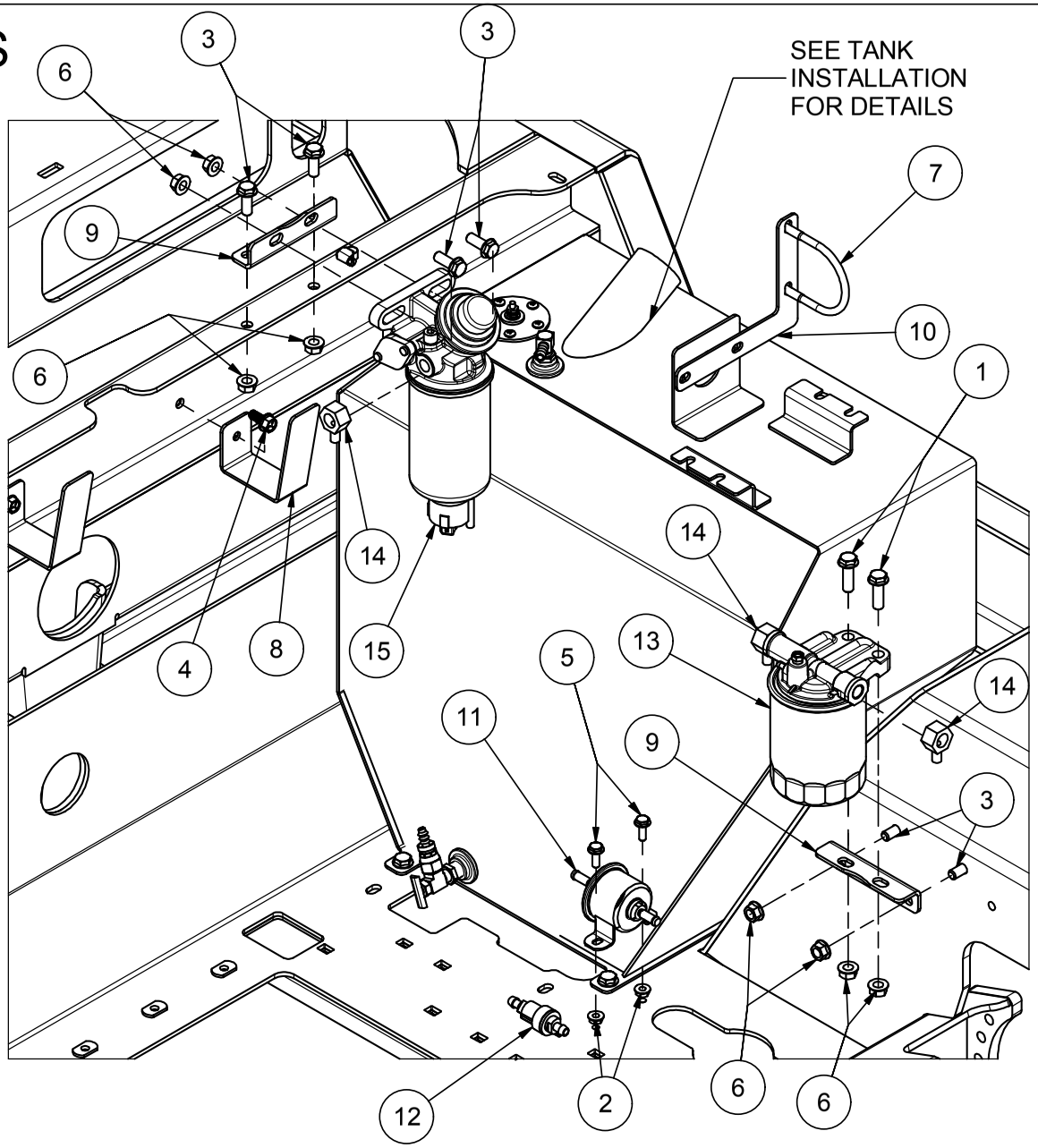

Parts List		
ITEM	PART #	DESCRIPTION
1	110161	BOLT, 3/8-16 X 1.25, WIZ FLANGE
2	110290	NUT, 1/4-20 WIZ FLANGE
3	110440	BOLT, 3/8-16 X 1, WIZ FLANGE
4	110444	Bolt, 5/16-18 X 0.75 Wiz Flng Gr 5 Zinc
5	110468	BOLT, 1/4-20 X 0.75, WIZ FLANGE
6	110645	NUT, 3/8-16 WIZ FLANGE
7	110824	BOLT, U-, 5/16-18 X 2-1/2 X 3-3/16
8	311853	BRKT, HOSE SUPPORT
9	311885	BRKT, FILTER/SEPARATOR MOUNTING
10	311909	BRKT, INTAKE TUBE SUPPORT
11	342058	Fuel Pump, Kubota D1803
12	342059	Fuel Check Valve, Kubota D1803
13	343038	Fuel Filter Assembly, Included with Engine
14	343038	Fuel Adapter, Included with Engine
15	343038	Fuel/Water Separator, Included with Engine

SERVICE PARTS	
PART #	DESCRIPTION
342057	Fuel Filter, Kubota D1803
342061	Element, Water Seperator, Kubota D1803

12/11/2018

FUEL LINES

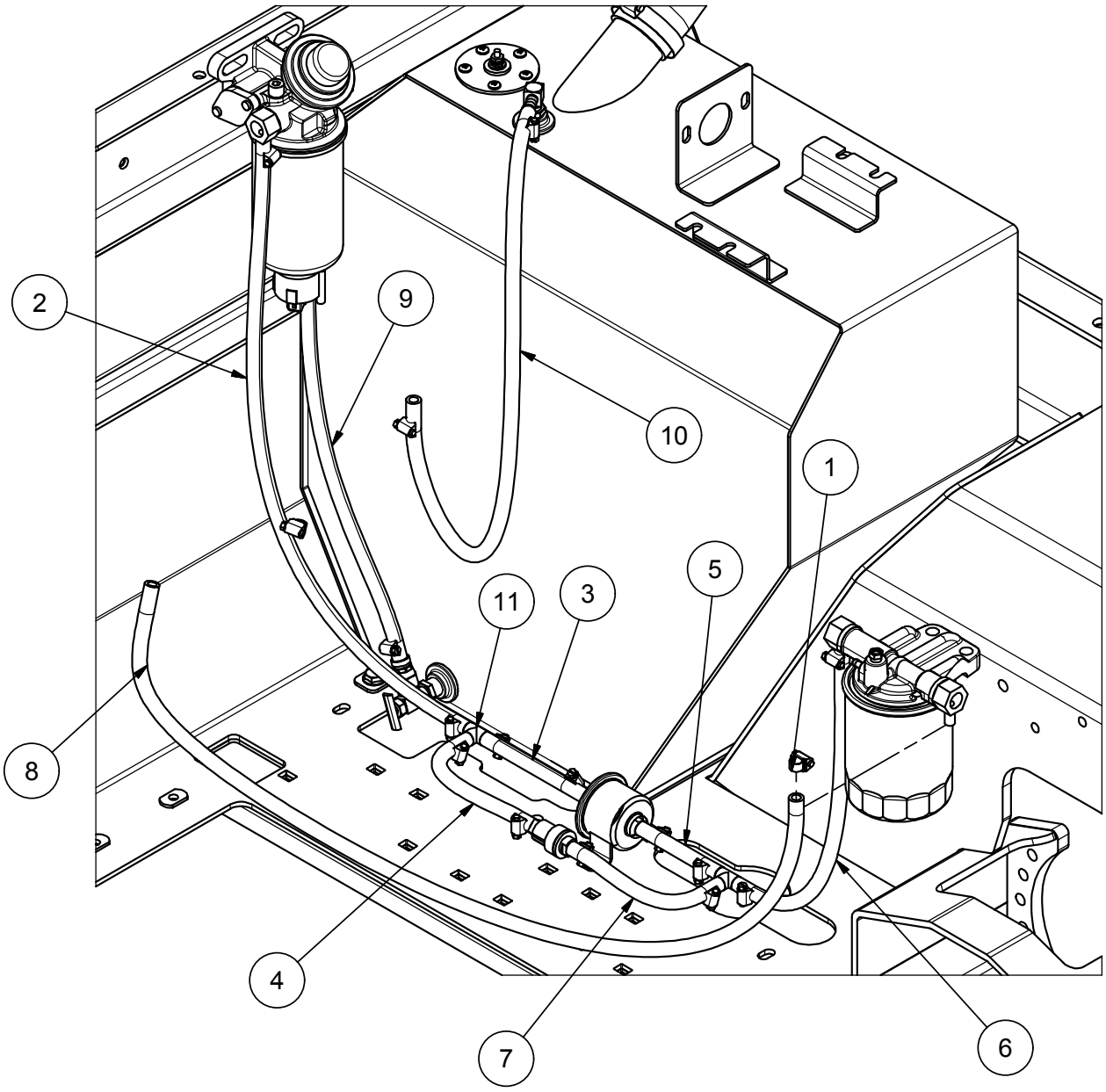

Parts List					
ITEM	PART #	DESCRIPTION	END 1 LOC	END 2 LOC	Length (IN)
1	100361	CLAMP, HOSE #4 .25 MINI	N/A	N/A	N/A
2	100756	Hose, 5/16 High Pressure Fuel	Fuel/Water Seperator	Tee Fitting	26.5
3	100756	Hose, 5/16 High Pressure Fuel	Tee Fitting	Fuel Pump	4.75
4	100756	Hose, 5/16 High Pressure Fuel	Tee Fitting	Fuel Check Valve	6.375
5	100756	Hose, 5/16 High Pressure Fuel	Fuel Pump	Tee Fitting	3.75
6	100756	Hose, 5/16 High Pressure Fuel	Tee Fitting	Fuel Filter	12.9375
7	100756	Hose, 5/16 High Pressure Fuel	Fuel Check Valve	Tee Fitting	6.875
8	100756	Hose, 5/16 High Pressure Fuel	Fuel Filter	Engine	36.75
9	100756	Hose, 5/16 High Pressure Fuel	Fuel/Water Seperator	Fuel Tank	22.0
10	100756	Hose, 5/16 High Pressure Fuel	Fuel Tank	Engine	24.375
11	301008	Fitting, Tee 5/16, Barbed, Brass	N/A	N/A	N/A

04/10/2018

Operator Station Assembly

(Seat, Steering Column, Console, & Foot Pedal)

ITEM	PART #	DESCRIPTION
1	100373	TRACTION PAD, FLEX-TREAD, 5.50"
2	110020	Bolt, 5/16-18 X 0.75 in Carriage
3	110174	NUT, 1/4-20, UNITORQUE LOCK
4	110264	BOLT, 10-24 X .5 STAINLESS, PHILLIPS
5	110410	BOLT, 1/4-20 X 2.5
6	110468	BOLT, 1/4-20 X 0.75, WIZ FLANGE
7	110588	NUT, 1/2-13 WIZ FLANGE
8	110606	NUT, 5/16-18 WIZ FLANGE
9	110630	NUT, 1/4-20 LOCK (NYLON INSERT)
10	110640	Hex Nut M10
11	110645	NUT, 3/8-16 WIZ FLANGE
12	110662	WASHER, 1/2" FLAT SPECIAL 1.25od
13	110689	WASHER, 10mm LOCK
14	110788	BOLT, 10-24 X .375 STAINLESS, PHILLIPS
15	110835	NUT, 10-24 RIVET ALUMINUM
16	110999	Nut, 10-24 U-Type, .025"-.125" panel
17	111030	BUSHING, IGUS .625 X .50 X .75
18	111049	Torsion Spring, 90 Deg RH
19	111055	STUD, M10 X 1.5 X 42 GRADE 8.8
20	111056	BOLT, 1/2 X 3.50 SHOULDER
21	111094	WASHER, 1/2 x .688 MIL SPEC FLAT
22	112070	Bolt, 1/2-13 X 1.25 in Carriage
23	152004	HOLDER, MANUAL
24	302017	CLEVIS - THROTTLE
25	302078	SEAT, I3M SUSPENSION
26	302079	COLUMN ASSY, TILT STEERING
27	302080	CABLE, HYDROSTAT PUSH/PULL
28	311726	MOUNT, STEERING COLUMN
29	311737	PLATE, ORBITAL COVER
30	311789	BRACKET, NEUTRAL SPRING
31	311790	BUSHING, .50 x .266 x 1.975
32	311792	MOUNT, FOOT PEDAL
33	311797	COVER, FOOT PEDAL
34	315265	WELDMENT, OPERATOR CONSOLE
35	315276	WELDMENT, FOOT PEDAL
36	323046	MOTOR, STEERING ORBITAL
37	502087	Cap, Center Steering
38	502088	Nut, Steering Wheel, 13/16-20 UNEF
39	552002	STEERING WHEEL
40	802035	BOX, PLASTIC, MANUAL OVERRIDE

Parts List

ITEM	PART #	DESCRIPTION
41	810747	SWITCH SHIM
42	810818	MOUNT, ARM REST SWITCH
43	832002	SWITCH ROLLER PLUNGER
44	832004	SWITCH, PADDLE, CARLING (29261)
45	832024	MOUNT, SWITCH (VMS)

Parts List

10/3/2017

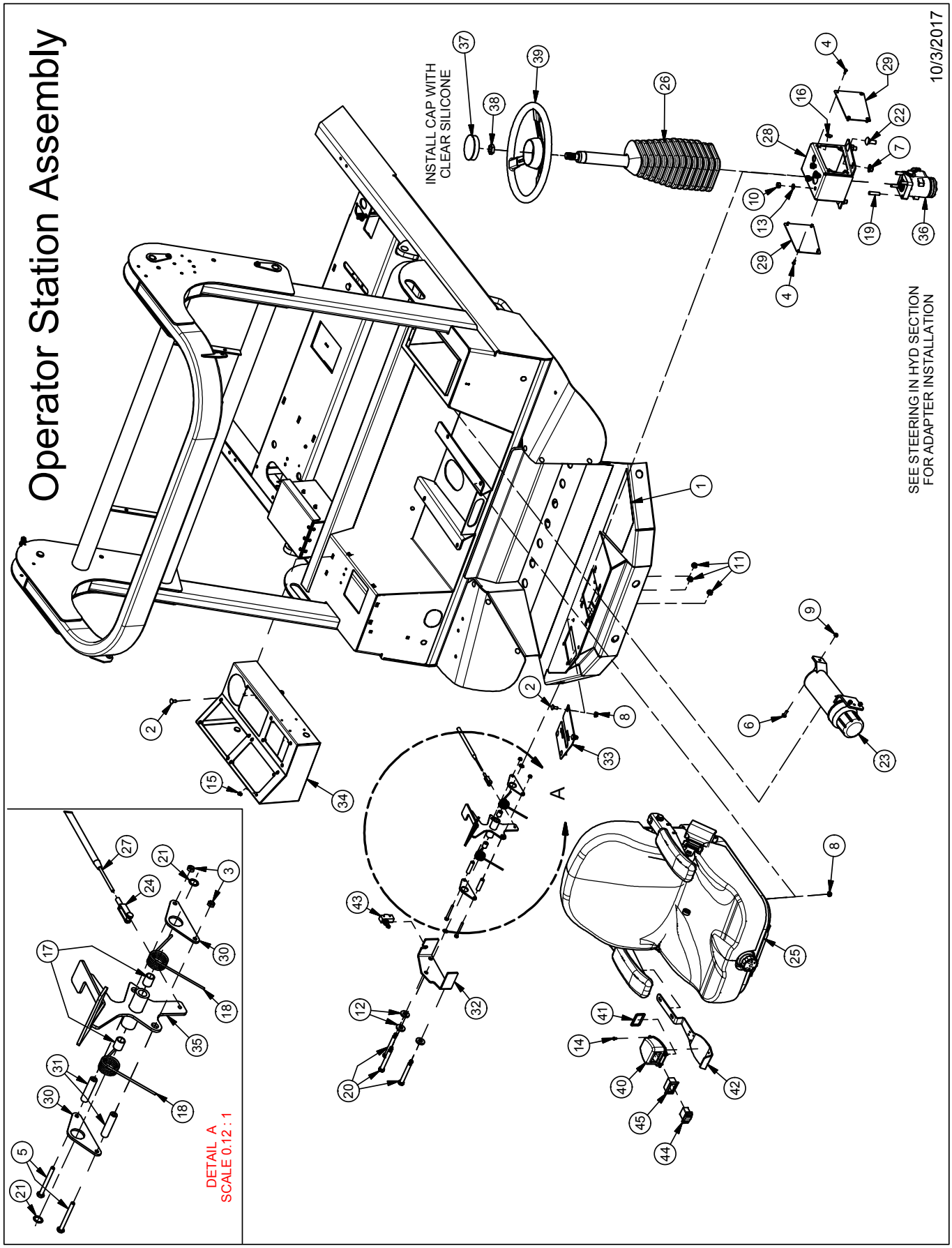
Operator Station Assembly
10/3/2017
INSTALL CAP WITH
CLEAR SILICONE
SEE STEERING IN HYD SECTION
FOR ADAPTER INSTALLATION
DETAIL A
SCALE 0.12 : 1
A

Operator Station Assembly

(Mirrors, Fenders, Bumper, Toolbox Components, etc.)

TOOLS STORED IN TOOLBOX		
QTY	PART #	DESCRIPTION
2	575064	TOOL, BRAKE RELEASE
1	311791	HANDLE, HOPPER LIFT
1	910044	COVER, VINYL GRIP
2	572005	CYL STOP, 1" THICK
4	572003	CYL STOP, 1/2" THICK
4	102077	CYL STOP, 1/4" THICK

Parts List		
ITEM	PART #	DESCRIPTION
1	110020	Bolt, 5/16-18 X 0.75 in Carriage
2	110119	NUT, 10-24 LOCK
3	110339	SCREW, 10-24X1.25 PAN HEAD PHPS
4	110391	Bolt, 5/8-11 X 2 in Carriage
5	110402	Bolt, 3/8-16 X 1.25 in Carriage
6	110422	BOLT, 5/16-18 X .75
7	110444	BOLT, 5/16-18 X 0.75, WIZ FLANGE
8	110606	NUT, 5/16-18 WIZ FLANGE
9	110617	LUGNUT, 1/2-20 GR 5
10	110618	NUT, 3/8-16 LOCK NYLON INSERT
11	110631	NUT, 10-24 LOCK NYLON INSERT
12	110639	NUT, 5/8-11, UNITORQUE LOCK
13	110650	WASHER, 5/8" FLAT STANDARD
14	110674	WASHER, 5/16" LOCK
15	110676	WASHER, 3/8" FLAT STANDARD
16	110788	BOLT, 10-24 X .375 STAINLESS, PHILLIPS
17	110850	ISOLATOR - BUMPER, 64865K1, 250 LB
18	112105	LATCH, RUBBER T-HANDLE DRAW
19	112106	Keeper, Draw Latch
20	211747	FRICTION WASHER 1.5"
21	302091	TIRE & WHEEL ASSY, FRONT TURF TV30
22	311329	FENDER - TV30, LH
23	311330	FENDER - TV30, RH
24	311711	LID, TV30 TOOLBOX
25	311729	HINGE, 6" ALUMINUM W/ HOLES
26	311730	BUMPER, TV30
27	311841	SHIELD, TV30 ROPS
28	315173	BASE -MIRROR, LH, WELDMENT
29	315174	BASE -MIRROR, RH, WELDMENT
30	502027	MIRROR

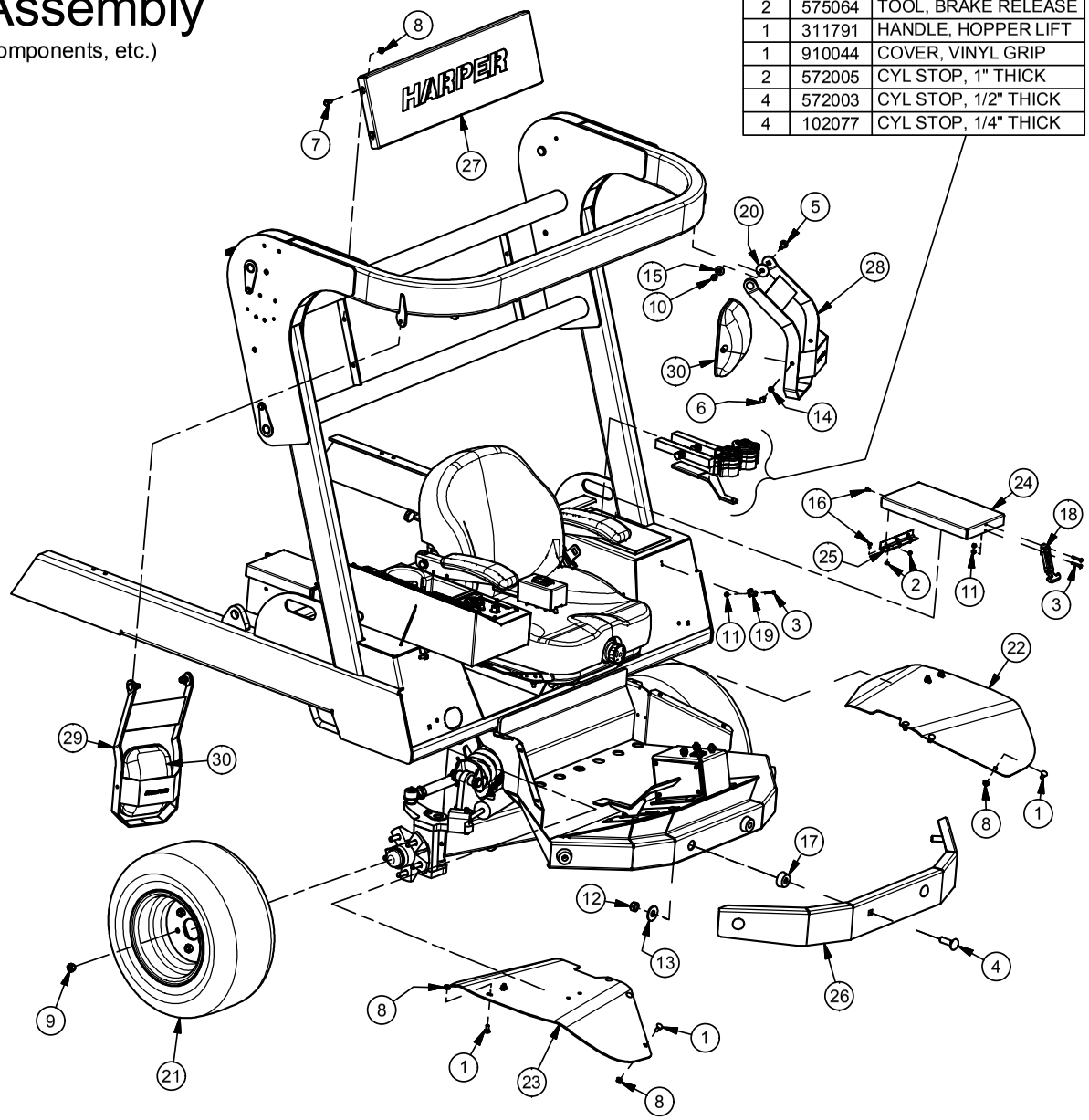

2/18/2016

Console Assembly

Parts List		
ITEM	PART #	DESCRIPTION
1	102062	PLUG, .75" RECESSED BUTTON
2	110020	Bolt, 5/16-18 X 0.75 in Carriage
3	110606	NUT, 5/16-18 WIZ FLANGE
4	110788	BOLT, 10-24 X .375 STAINLESS, PHILLIPS
5	110835	NUT, 10-24 RIVET ALUMINUM
6	130022	TERMINAL, MALE F/INS PUSH ON
7	132179	Switch, Paddle, Carling DPDT, 2-Pos
8	302015	HOLDER - CUP, MOLDED
9	302031	DECAL, SWITCHES
10	302088	DECAL, COOLING FAN REVERSE ROTATION
11	302097	Decal, Ignition
12	311723	PANEL, ROCKER SWITCH
13	315265	WELDMENT, OPERATOR CONSOLE
14	315366	Weldment, Ignition Dash
15	332031	SWITCH, IGNITION
16	332037	SWITCH, CONTURA II CARLING, DPDT MOMENTARY
17	332047	SWITCH, PADDLE, CARLING DPDT 3P MOMENTARY
18	342060	Display, Murphy PV480
19	730006	INDICATOR LIGHT
20	832003	SWITCH, PADDLE, CARLING (280063)
21	832004	SWITCH, PADDLE, CARLING (29261)
22	832005	SWITCH, PADDLE, CARLING (29253)
23	832007	SWITCH MOUNT, END
24	832008	SWITCH MOUNT, MIDDLE
25	832024	MOUNT, SWITCH (VMS)
26	832033	HOLE PLUG (VHP)
27	902149	DECAL, READ OPERATORS MANUAL.

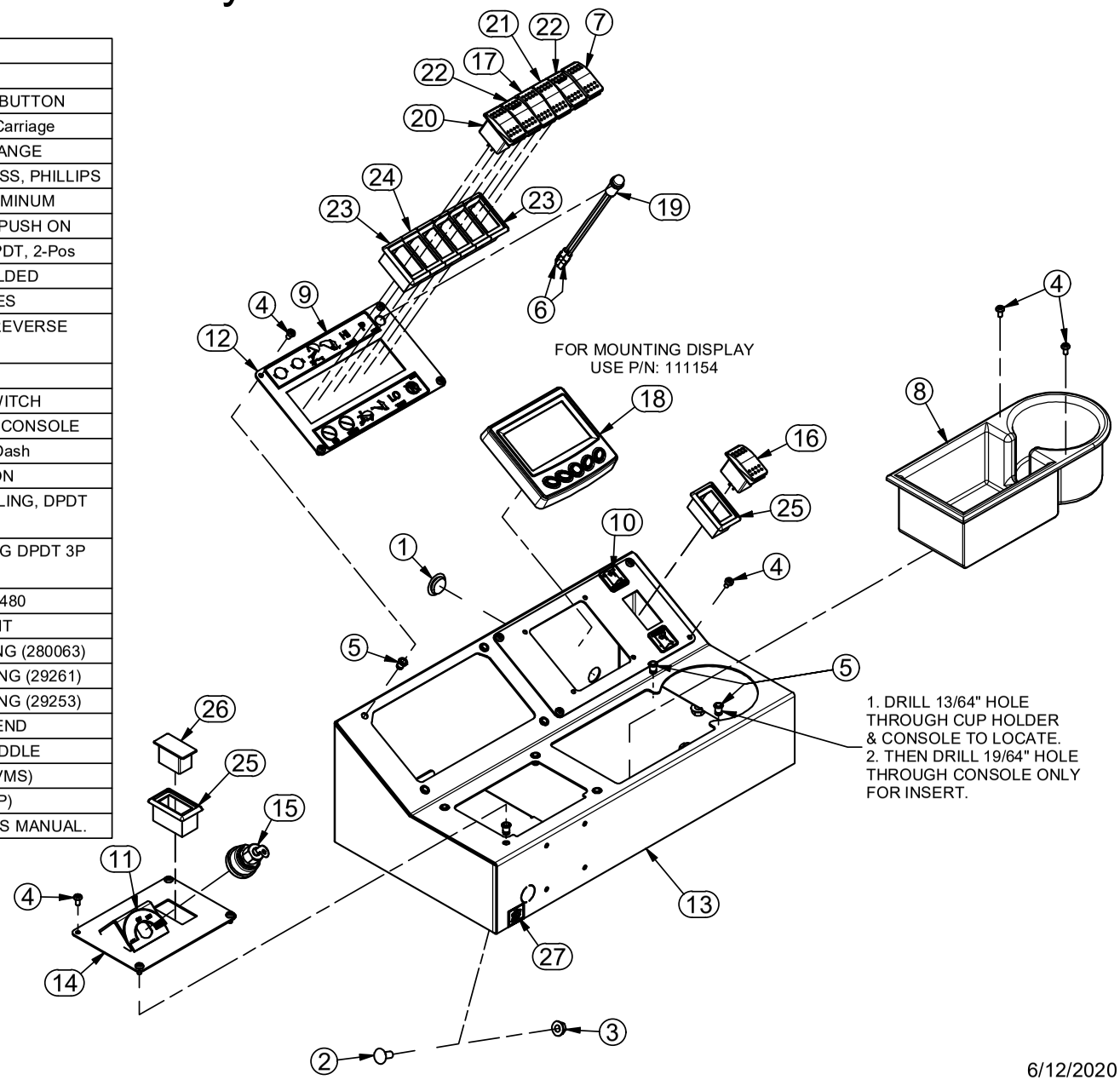

6/12/2020

HARPER TURF EQUIPMENT

ELECTRICAL ASSEMBLY

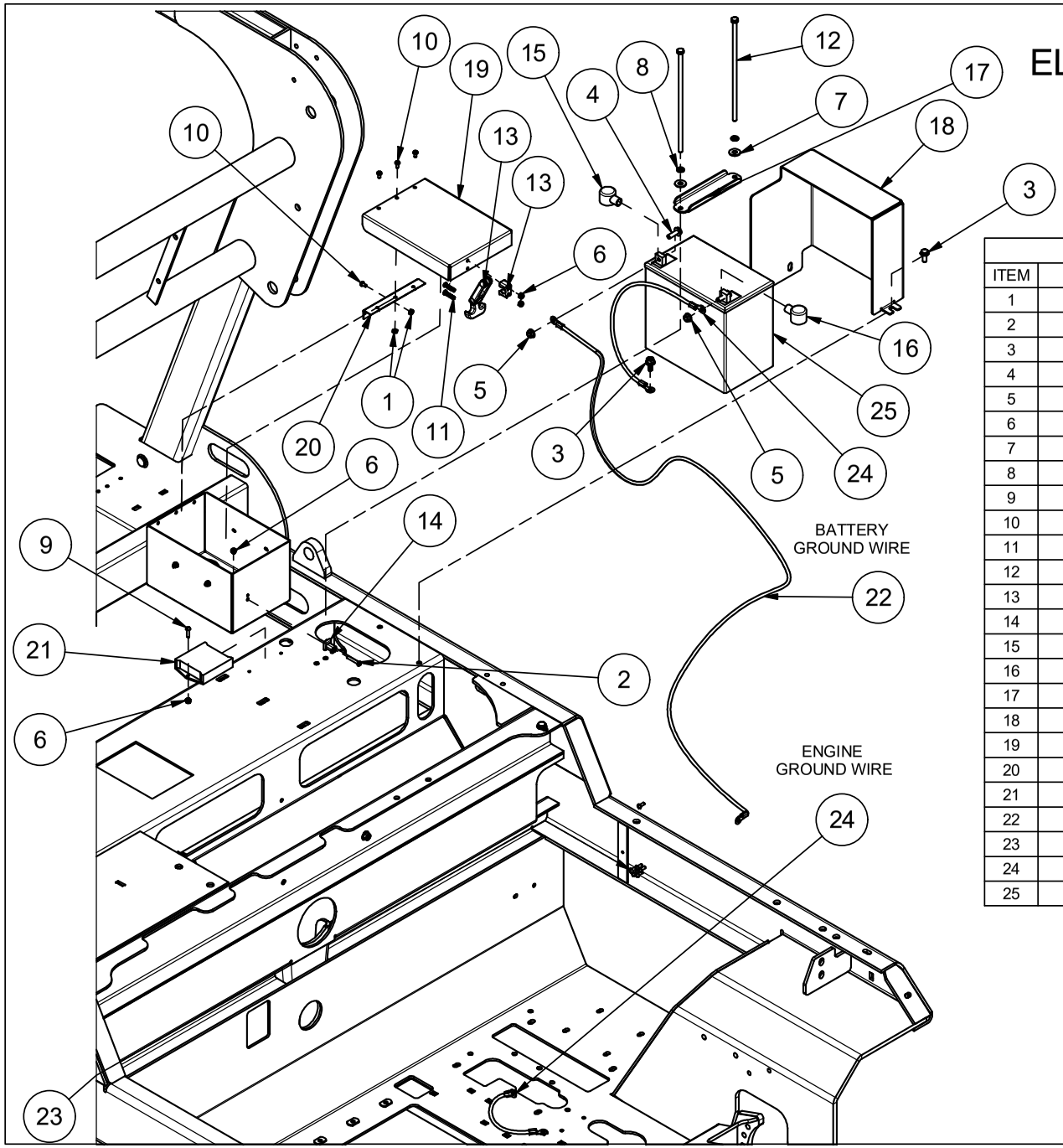

Parts List		
ITEM	PART #	DESCRIPTION
1	110119	NUT, 10-24 LOCK
2	110339	SCREW, 10-24X1.25 PAN HEAD PHPS
3	110444	Bolt, 5/16-18 X .75, WIZ FLANGE
4	110459	BOLT, 5/16-18 X 1, WIZ FLANGE
5	110606	NUT, 5/16-18 WIZ FLANGE
6	110631	NUT, 10-24 LOCK NYLON INSERT
7	110665	WASHER, 5/16" FLAT STANDARD
8	110674	WASHER, 5/16" LOCK
9	110709	SCREW, 10-24 X 0.75, RHMS
10	110788	BOLT, 10-24 X .375 STAINLESS, PHILLIPS
11	110838	Screw, 10-24 X 1, Pan , SS
12	111198	BOLT, 5/16-18 X 9.5
13	112105	LATCH, RUBBER T-HANDLE DRAW
14	112106	Keeper, Draw Latch
15	132069	BATTERY TERMINAL COVER, POSITIVE
16	132070	BATTERY TERMINAL COVER, NEGATIVE
17	311603	BRACKET - HOLD DOWN, BATTERY
18	311604	BATTERY ENCLOSURE
19	311728	LID, RELAY/FUSE BOX
20	311729	HINGE, 6" ALUMINUM W/ HOLES
21	332036	Inclinometer Switch, Solid-State
22	332052	CABLE, BATTERY, POSITIVE 1 Ga 86"
23	510960	SCREW, 10-24 X 0.5, RHMS
24	530051	CABLE, BATTERY/GND 16" BLACK
25	832011	BATTERY, SEALED GEL W/ L TERMINAL

For Mounting Fuse Blocks Use:
110631, 110709, 510960

11/5/2019

Fan Housing Assembly

Parts List			Parts List		
ITEM	PART #	DESCRIPTION	ITEM	PART #	DESCRIPTION
1	100361	CLAMP, HOSE #4 .25 MINI	27	120222	ADAPTER, 6MJ-6MB90
2	100365	MOLDING - EDGE GUARD, 5/32	28	120253	ADAPTER, 10MJ-12MB
3	100567	KEY, 3/8 X 3/8 X 1.75 in	29	302021	GASKET - FAN EXHAUST
4	100613	SEAL, RUBBER .50 X .187	30	302022	GASKET - RETURN AIR
5	102001	HOSE, 5/16 VACUUM	31	302060	SWIVEL, GARDEN HOSE-TO-PIPE
6	110020	Bolt, 5/16-18 X 0.75 in Carriage	32	302061	LOCKNUT, 3/4 NPT
7	110042	Bolt, 1/2-13 X 1.75 in Carriage	33	302062	PLUG, GARDEN HOSE
8	110093	SetScrew, 3/8-16 X 1.25	34	302082	LINER, BLOWER HOUSING
9	110154	Bolt, 1/4-20 X 0.75 in Carriage	35	311188	SHAFT - IMPELLER, TV30
10	110290	NUT, 1/4-20 WIZ FLANGE	36	311212	COVER - HOSE PORT, FUNNEL
11	110326	Bolt, 1/4-20 X 1 in Carriage	37	311380	STRAP - HOLD DOWN, LINER
12	110343	BOLT, 1/2 X 3/8 SHOULDER	38	311385	BRACKET - MOUNT, FRONT FUNNEL, LH
13	110419	BOLT, 1/2-13 X 1.75	39	311386	BRACKET - MOUNT, FRONT FUNNEL, RH
14	110426	BOLT, 5/16-18 X 0.5, WIZ FLANGE	40	311649	COVER, HOSE CLEANOUT ACCESS
15	110539	BOLT, 7/16-14 X 1.25	41	311914	ADAPTER PLATE
16	110556	Bolt, 3/8-16 X 1 in Carriage	42	315114	IMPELLER WELDMENT
17	110603	NUT, 5/16-18 LOCK (NYLON)	43	315158	ADAPTER - FAN EXHAUST, WELDMENT
18	110606	NUT, 5/16-18 WIZ FLANGE	44	315159	ADAPTER - RETURN AIR, WELDMENT
19	110610	NUT, 1/2-13	45	315261	WELDMENT, BLOWER HOUSING
20	110630	NUT, 1/4-20 LOCK (NYLON INSERT)	46	315310	Weldment, Funnel TV35
21	110645	NUT, 3/8-16 WIZ FLANGE	47	315311	WELDMENT, FAN COUPLER
22	110666	WASHER, 1/2" LOCK	48	342009	BEARING, 4FNG 1 1/2", HD
23	110671	WASHER, 7/16" LOCK	49	500265	COOLANT BOTTLE
24	110826	NUT, 3/8-16 GR 5	50	923004	MOTOR, 1.76 CI, FAN DRIVE
25	110884	PLUG - 11/16", NON-VENTED	51	940113	KEY, 3/8 X 5
26	110890	PLUG - 1-1/4", FINISHING			

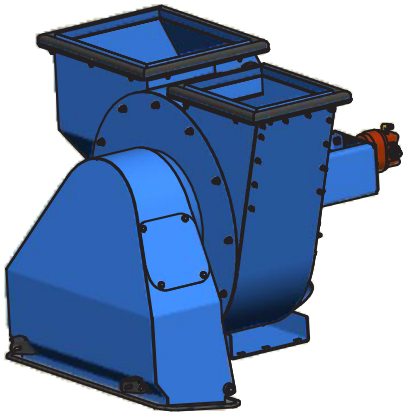

3/27/2017

Fan Housing Assembly

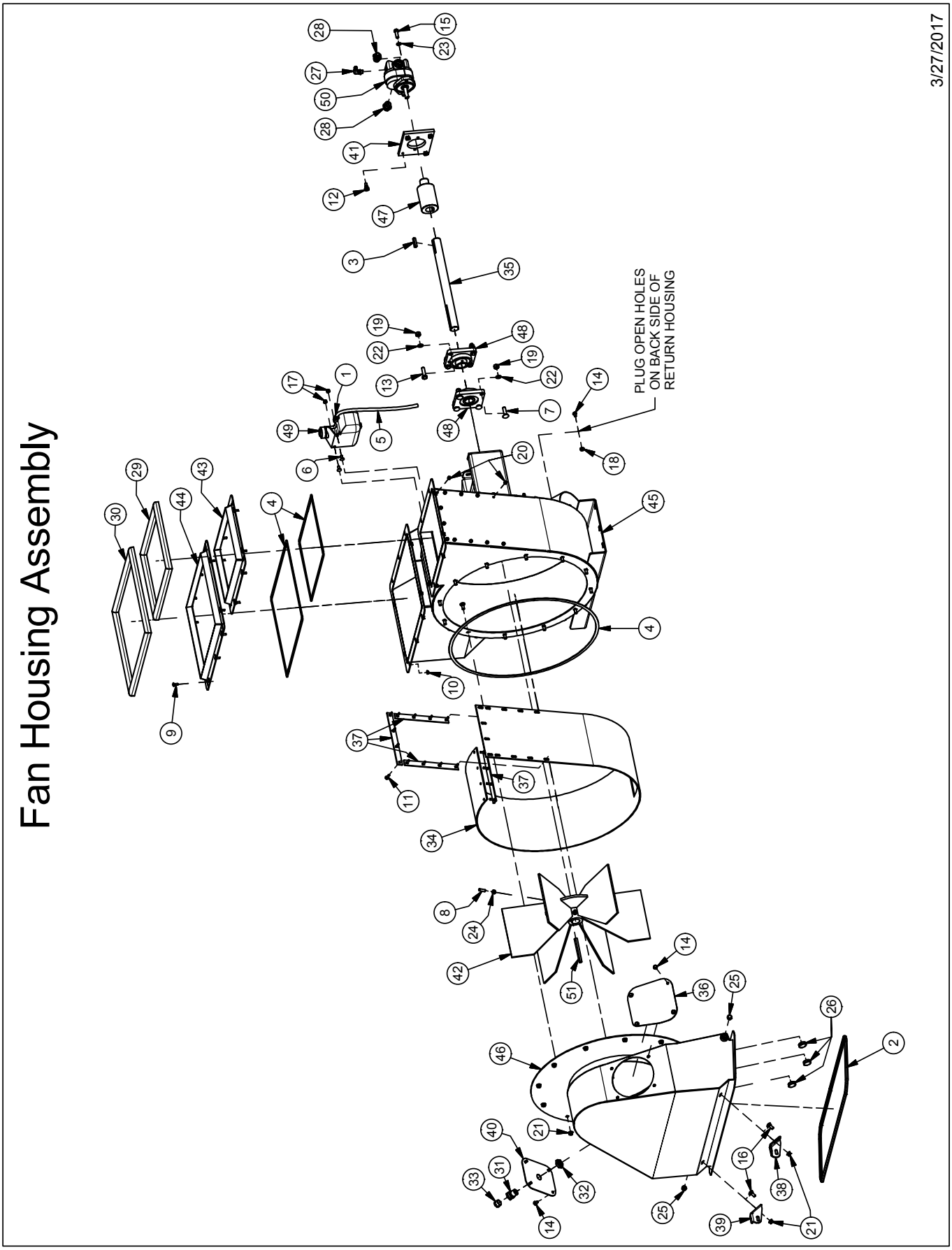

FAN HOUSING INSTALLATION

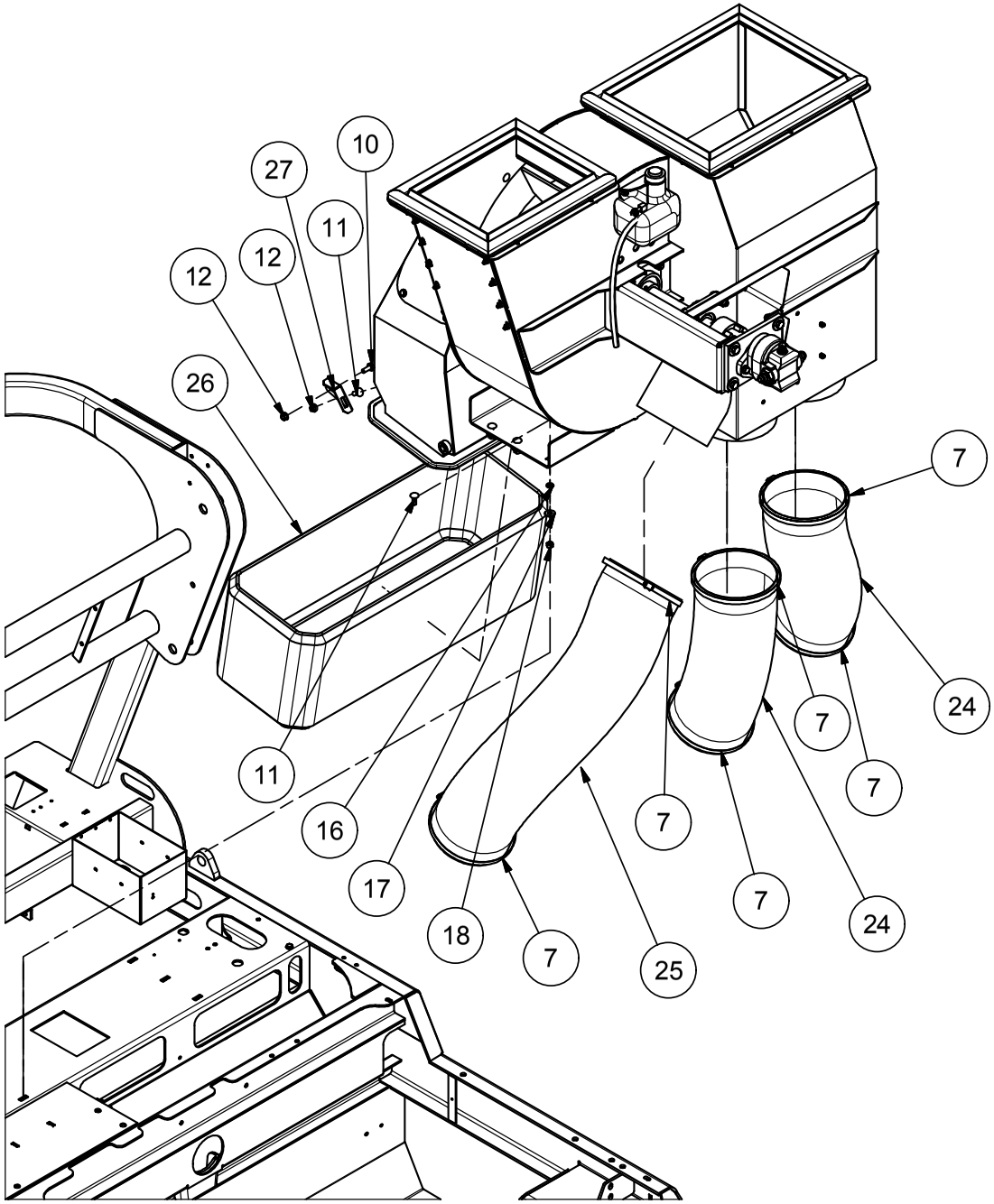

Parts List		
ITEM	PART #	DESCRIPTION
1	100361	CLAMP, HOSE #4 .25 MINI
2	102001	HOSE, 5/16 VACUUM
3	110071	1/4-20 U-TYPE TAPPED HOLE
4	110086	BOLT, 1/2-13 X 1.0
5	110290	NUT, 1/4-20 WIZ FLANGE
6	110298	WASHER, 1/4" FLAT SAE
7	110311	CLAMP, HOSE #912 8.00"
8	110358	Bolt, 1/4-20 X 0.625 in Carriage
9	110437	BOLT, 3/8-16 X 0.75, WIZ FLANGE
10	110440	BOLT, 3/8-16 X 1, WIZ FLANGE
11	110556	Bolt, 3/8-16 X 1 in Carriage
12	110645	NUT, 3/8-16 WIZ FLANGE
13	110658	WASHER, 1/2" FLAT STANDARD
14	110666	WASHER, 1/2" LOCK
15	110667	WASHER, 1/4" LOCK
16	110672	WASHER, 3/8" LOCK
17	110676	WASHER, 3/8" FLAT STANDARD
18	110826	NUT, 3/8-16 GR 5
19	110842	Screw, 1/4-20 X 3/4 Wing Head
20	112007	CLAMP, 1.75", T-BOLT
21	120373	ADAPTER, 20BH-16MB
22	120444	ADAPTER, 12MJ-16MB-12MJ
23	120691	ADAPTER, 22BH-24MB
24	302009	TUBE, FLEX 8" X 2'
25	302010	TUBE, FLEX 8" X 4'
26	302023	RING - CANVAS, TV30
27	311385	BRACKET - MOUNT, FRONT FUNNEL, LH
28	311732	GUIDE, COOLING SCREEN
29	311736	ANGLE, SCREEN SUPPORT
30	315270	WELDMENT, COOLING SCREEN
31	343036	COOLING PACKAGE, RADIATOR & OIL COOLER

04/05/2018

RADIATOR & OIL COOLER INSTALLATION

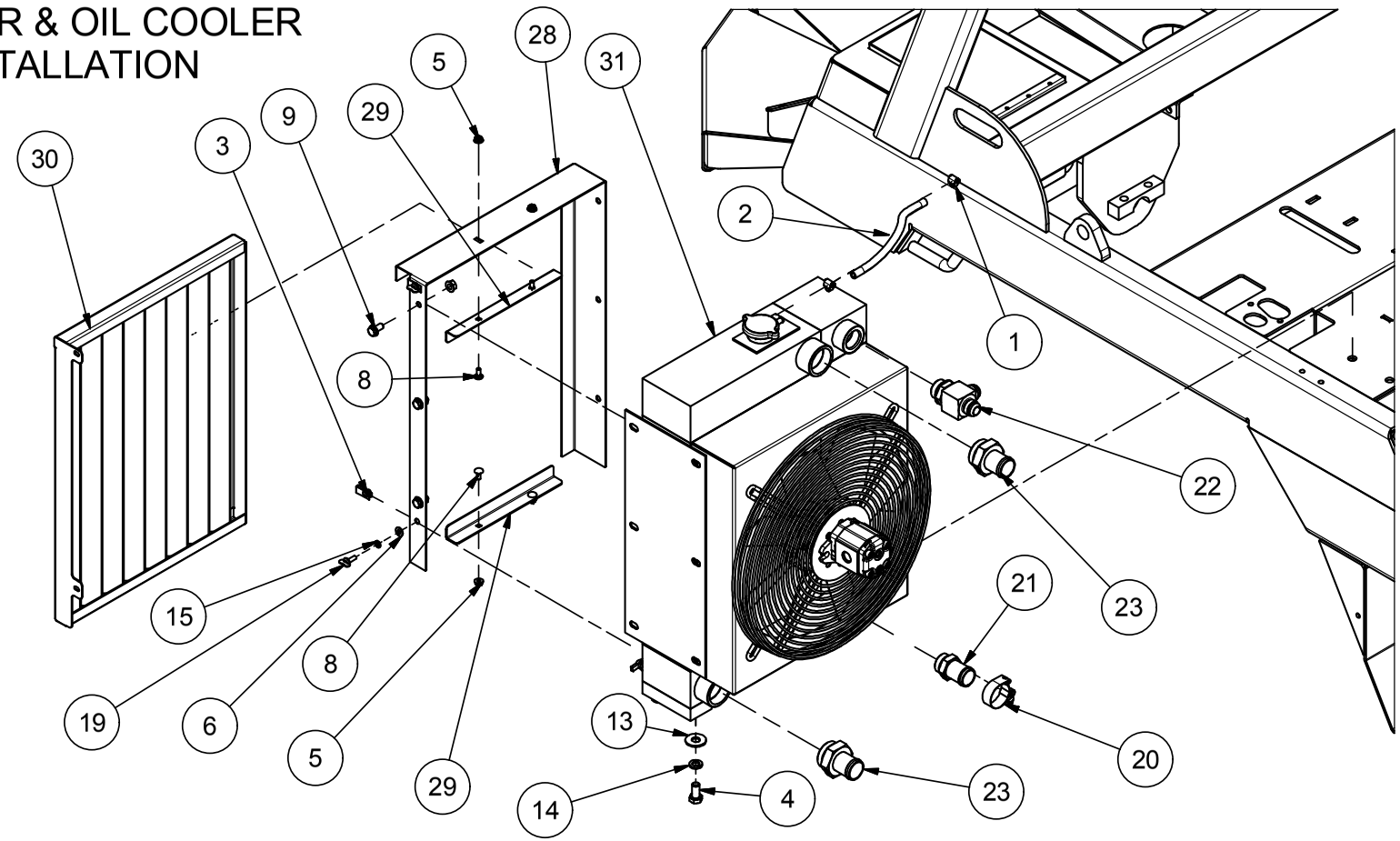

Parts List			Parts List			Parts List		
ITEM	PART #	DESCRIPTION	ITEM	PART #	DESCRIPTION	ITEM	PART #	DESCRIPTION
1	100361	CLAMP, HOSE #4 .25 MINI	12	110645	NUT, 3/8-16 WIZ FLANGE	23	120691	ADAPTER, 22BH-24MB
2	102001	HOSE, 5/16 VACUUM	13	110658	WASHER, 1/2" FLAT STANDARD	24	302009	TUBE, FLEX 8" X 2'
3	110071	1/4-20 U-TYPE TAPPED HOLE	14	110666	WASHER, 1/2" LOCK	25	302010	TUBE, FLEX 8" X 4'
4	110086	BOLT, 1/2-13 X 1.0	15	110667	WASHER, 1/4" LOCK	26	302023	RING - CANVAS, TV30
5	110290	NUT, 1/4-20 WIZ FLANGE	16	110672	WASHER, 3/8" LOCK	27	311385	BRACKET - MOUNT, FRONT FUNNEL, LH
6	110298	WASHER, 1/4" FLAT SAE	17	110676	WASHER, 3/8" FLAT STANDARD	28	311732	GUIDE, COOLING SCREEN
7	110311	CLAMP, HOSE #912 8.00"	18	110826	NUT, 3/8-16 GR 5	29	311736	ANGLE, SCREEN SUPPORT
8	110358	Bolt, 1/4-20 X 0.625 in Carriage	19	110842	Screw, 1/4-20 X 3/4 Wing Head	30	315270	WELDMENT, COOLING SCREEN
9	110437	BOLT, 3/8-16 X 0.75, WIZ FLANGE	20	112007	CLAMP, 1.75", T-BOLT	31	343036	COOLING PACKAGE, RADIATOR & OIL COOLER
10	110440	BOLT, 3/8-16 X 1, WIZ FLANGE	21	120373	ADAPTER, 20BH-16MB			
11	110556	Bolt, 3/8-16 X 1 in Carriage	22	120444	ADAPTER, 12MJ-16MB-12MJ			

04/05/2018

Hopper & Door Assembly

Parts List		
ITEM	PART #	DESCRIPTION
1	102004	D-Seal, Rubber 1.00" x 1.00"
2	110020	Bolt, 5/16-18 X 0.75 in Carriage
3	110290	NUT, 1/4-20 WIZ FLANGE
4	110328	BOLT, 5/16-18 X 1 SHFHCS
5	110354	BOLT, 1/4-20 X 2.0 HEX HEAD
6	110358	Bolt, 1/4-20 X 0.625 in Carriage
7	110426	BOLT, 5/16-18 X 0.5, WIZ FLANGE
8	110440	BOLT, 3/8-16 X 1, WIZ FLANGE
9	110444	BOLT, 5/16-18 X 0.75, WIZ FLANGE
10	110576	BOLT, 5/8-11 X 1.5 GR 5
11	110606	NUT, 5/16-18 WIZ FLANGE
12	110616	NUT, 5/16", J-TYPE, CAGE, .5C
13	110639	NUT, 5/8-11, UNITORQUE LOCK
14	110645	NUT, 3/8-16 WIZ FLANGE
15	110663	WASHER, 5/8" FLAT SAE
16	110804	NUT, 3/8-16 U-TYPE .75L
17	111072	RUBBER BUMPER, .75 x .625, 5/16-18 THREADED HOLE
18	122003	DOUBLE HOSE CLAMP
19	311248	BAFFLE - RETURN AIR, TV30
20	311286	SKIRT - HOPPER, FRONT
21	311287	SKIRT - HOPPER, LH
22	311288	SKIRT - HOPPER, RH
23	311657	PLATE, HINGE
24	311691	SIGHT GLASS, HOPPER
25	311692	Backing Plate, Sight Glass
26	311856	SCREEN, RH HOPPER RETURN AIR
27	311857	SCREEN, LH HOPPER RETURN AIR
28	315125	HOPPER WELDMENT
29	315131	DEFLECTOR - DEBRIS, HOPPER, WELDMENT
30	315134	DOOR - TV30, WELDMENT
31	315253	LUG WELDMENT, LH DOOR
32	315254	LUG WELDMENT, RH DOOR
33	315257	PIN WELDMENT, HOPPER DOOR
34	315294	LUG WELDMENT, RH HOPPER
35	315295	LUG WELDMENT, LH HOPPER
36	522104	DOUBLE HOSE CLAMP
37	522105	DOUBLE COVERPLATE
38	923011	Cylinder, 2 X 6, -6 SAE Cross

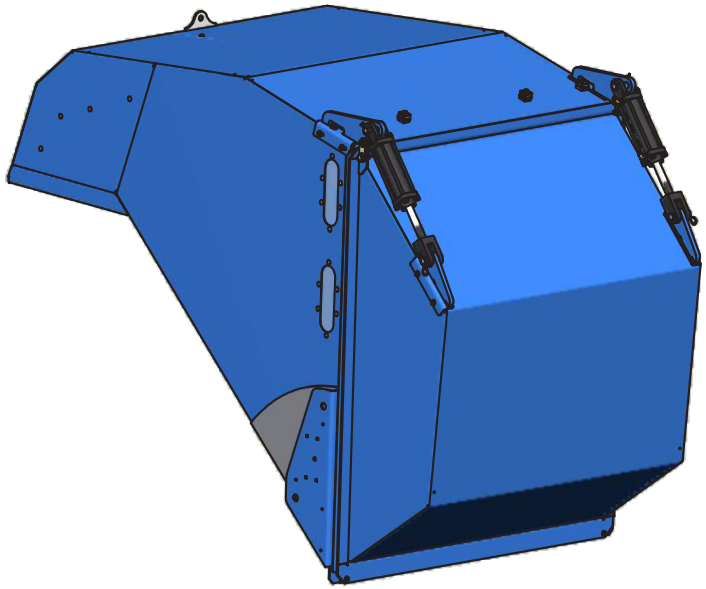

7/19/2016

Hopper & Door Assembly

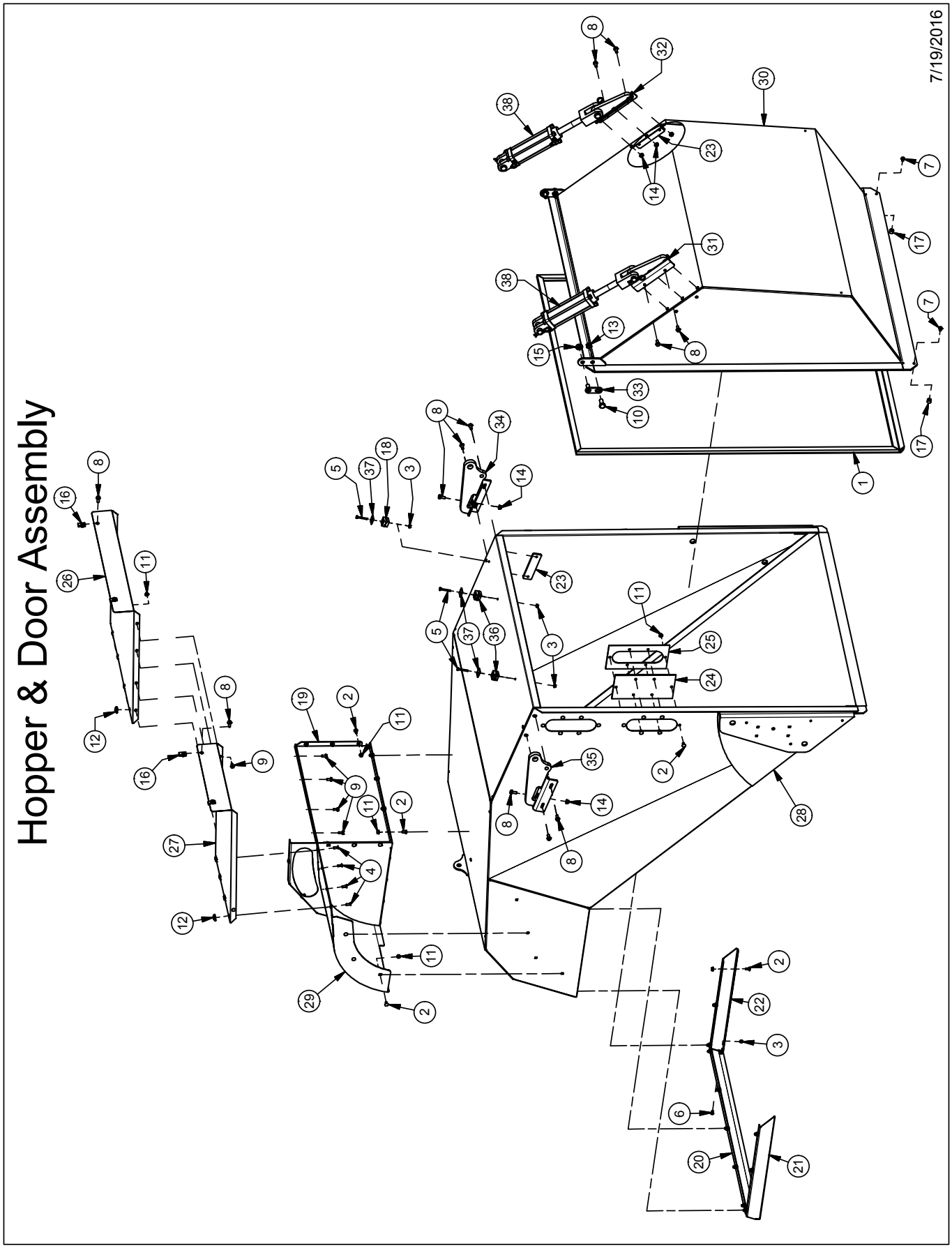

HOPPER INSTALLATION

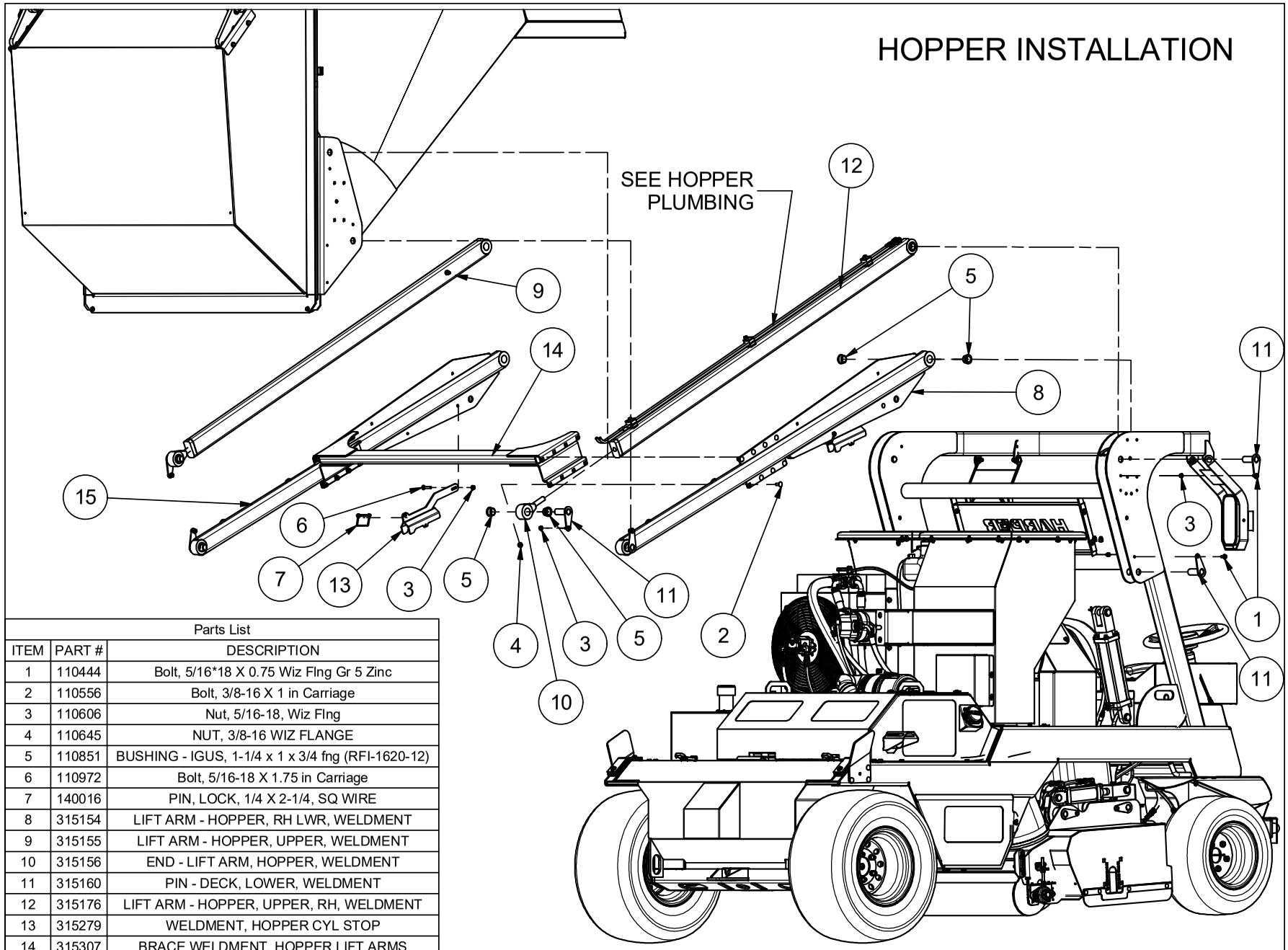

Parts List		
ITEM	PART #	DESCRIPTION
1	110444	Bolt, 5/16*18 X 0.75 Wiz Flng Gr 5 Zinc
2	110556	Bolt, 3/8-16 X 1 in Carriage
3	110606	Nut, 5/16-18, Wiz Flng
4	110645	NUT, 3/8-16 WIZ FLANGE
5	110851	BUSHING - IGUS, 1-1/4 x 1 x 3/4 fng (RFI-1620-12)
6	110972	Bolt, 5/16-18 X 1.75 in Carriage
7	140016	PIN, LOCK, 1/4 X 2-1/4, SQ WIRE
8	315154	LIFT ARM - HOPPER, RH LWR, WELDMENT
9	315155	LIFT ARM - HOPPER, UPPER, WELDMENT
10	315156	END - LIFT ARM, HOPPER, WELDMENT
11	315160	PIN - DECK, LOWER, WELDMENT
12	315176	LIFT ARM - HOPPER, UPPER, RH, WELDMENT
13	315279	WELDMENT, HOPPER CYL STOP
14	315307	BRACE WELDMENT, HOPPER LIFT ARMS
15	315381	LIFT ARM - HOPPER, LH LOWER, WELDMENT

11/5/2019

WHEEL AND SHIELD INSTALLATION

Parts List		
ITEM	PART #	DESCRIPTION
1	100613	SEAL, RUBBER .50 X .187
2	110119	NUT, 10-24 LOCK
3	110298	WASHER, 1/4" FLAT SAE
4	110339	SCREW, 10-24X1.25 PAN HEAD PHPS
5	110600	NUT, 5/16-18, UNITORQUE LOCK
6	110608	NUT, 5/16-18
7	110617	LUGNUT, 1/2-20 GR 5
8	110631	NUT, 10-24 LOCK NYLON INSERT
9	110665	WASHER, 5/16" FLAT STANDARD
10	110667	WASHER, 1/4" LOCK
11	110674	WASHER, 5/16" LOCK
12	110788	BOLT, 10-24 X .375 STAINLESS, PHILLIPS
13	110842	Screw, 1/4-20 X 3/4 Wing Head
14	112106	Keeper, Draw Latch
15	302008	26" MULTI-TRACK TIRE & WHEEL
16	302091	TIRE & WHEEL ASSY, FRONT TURF TV30
17	311729	HINGE, 6" ALUMINUM W/ HOLES
18	311918	AIR CLEANER DOOR
19	311919	ECU Shield, D1803
20	312022	CLIP, HAIRPIN 3/32 x 1.625
21	315271	WELDMENT, TV30 DECK
22	315274	SHIELD, DECK CHAIN
23	315289	WELDMENT, REAR ENG SHIELD
24	315296	WELDMENT, RH LOWER SHIELD
25	315308	WELDMENT, ENGINE COVER
26	502133	Latch

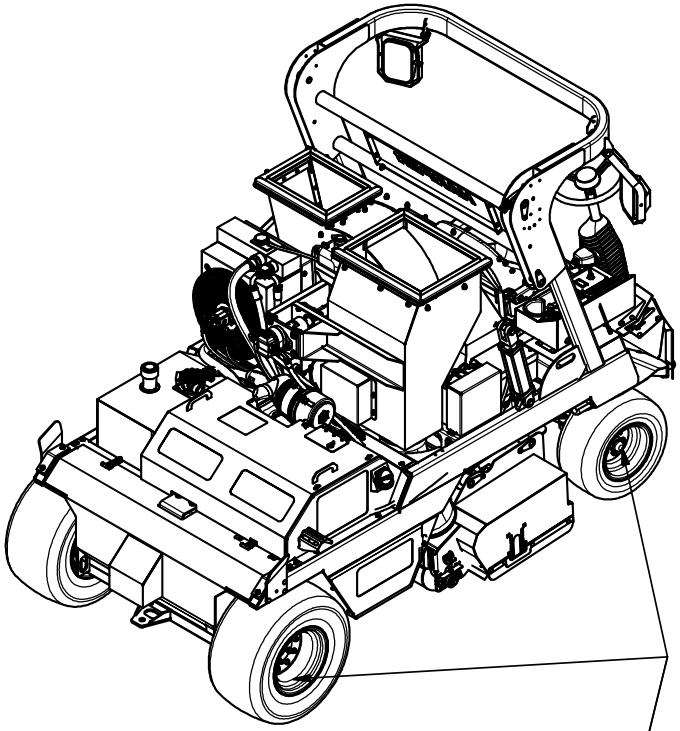

TORQUE ALL LUGNUTS TO 140 FT-LBS

302008 Service Parts	
Part #	DESCRIPTION
342021	Wheel, 12 X 10.5; 5 on 4.5
342020	Tire, 26 X 12 X12/6 Grassmaster

302091 Service Parts	
Part #	DESCRIPTION
342019	Wheel, 10 X 7; 5 on 4.5
342051	Tire, 20 X 10-10 PR/TL Grassmaster

04/05/2018

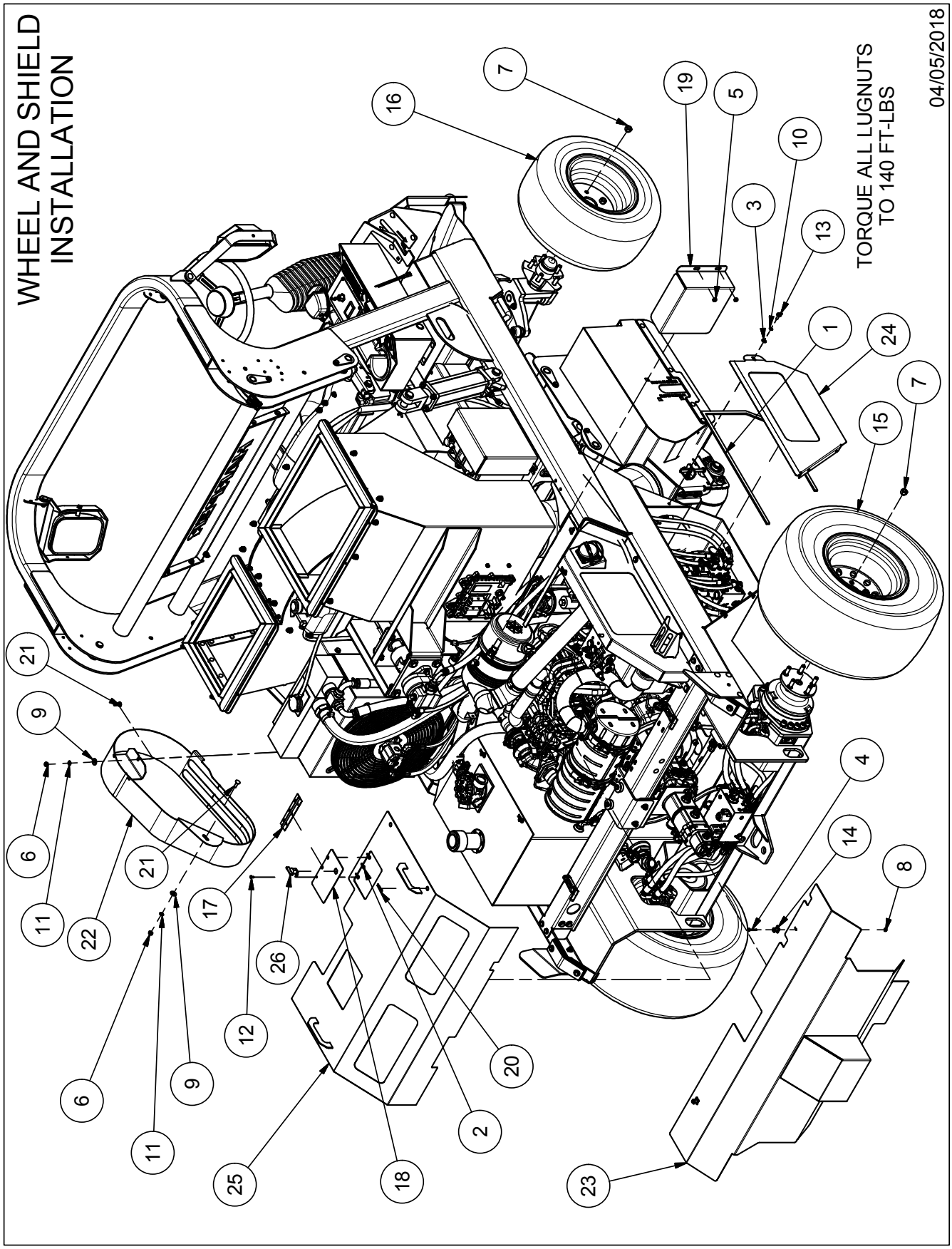
WHEEL AND SHIELD
INSTALLATION
TORQUE ALL LUGNUTS
TO 140 FT-LBS
04/05/2018
1
2
3
4
5
6
7
8
9
10
11
12
13
14
15
16
17
18
19
20
21
22
23
24
25
26

CONSOLE AND REAR DECALS

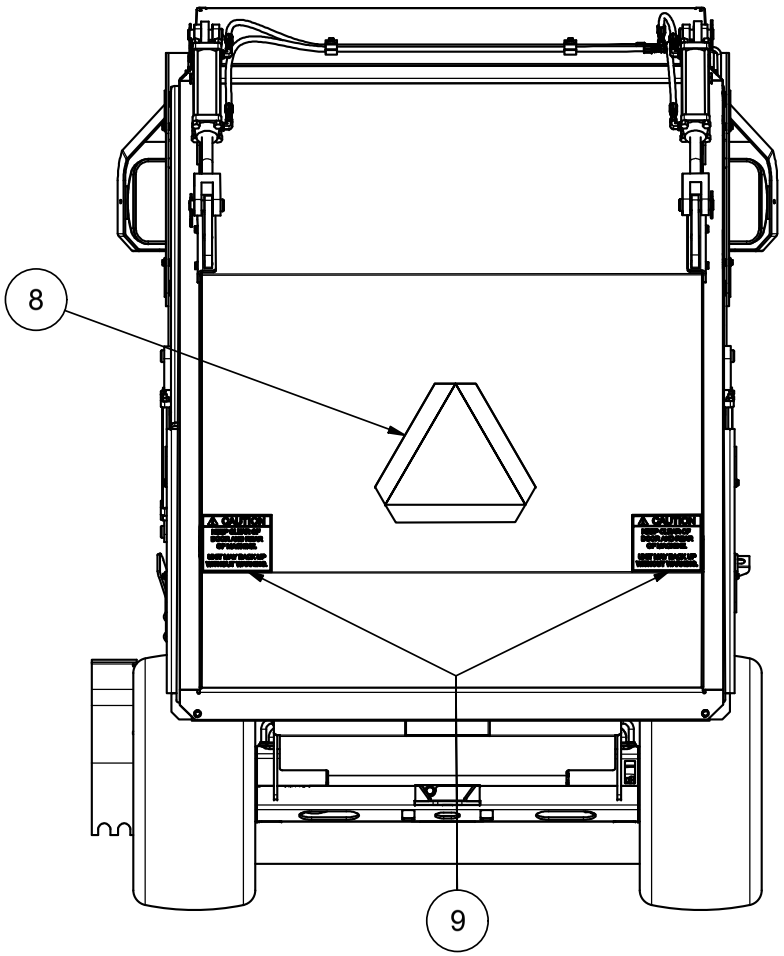

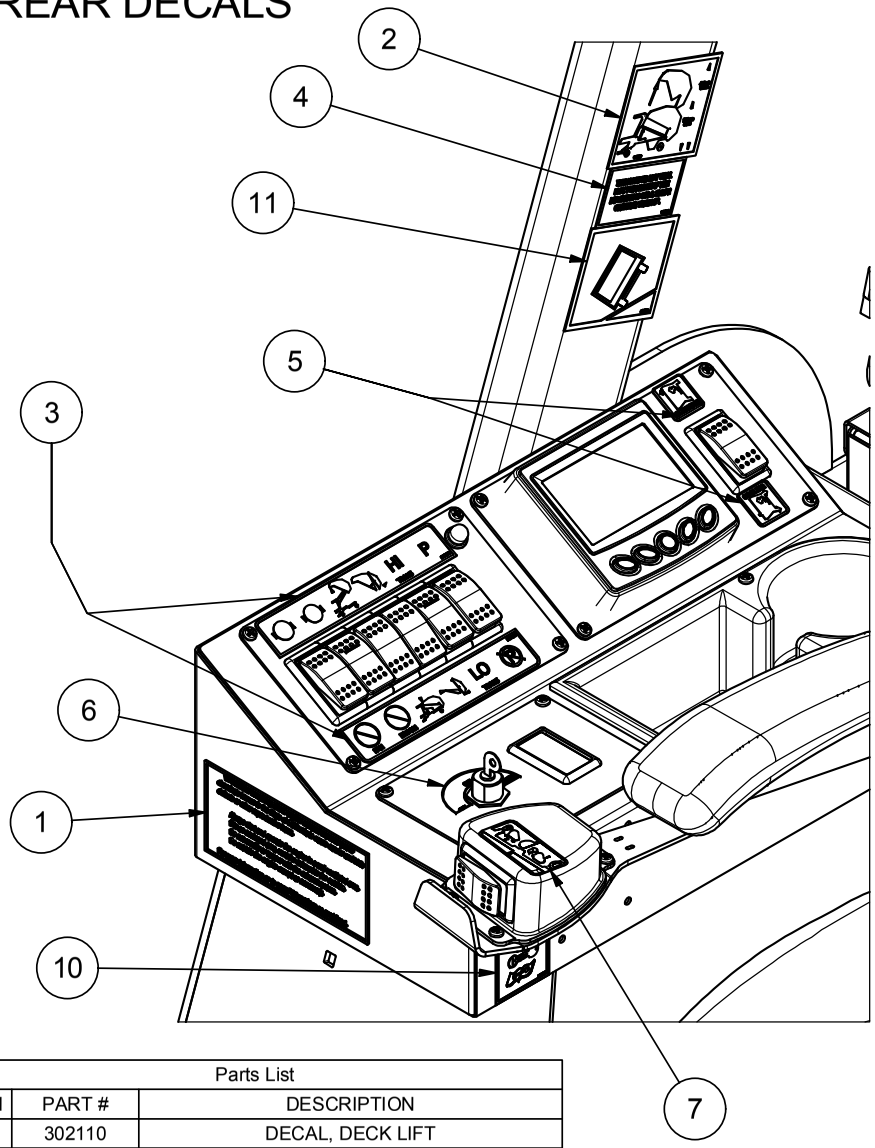

Parts List			Parts List		
ITEM	PART #	DESCRIPTION	ITEM	PART #	DESCRIPTION
1	202133	Decal, Prop 65, Diesel	7	302110	DECAL, DECK LIFT
2	302027	DECAL, OVERHEAD CLEARANCE	8	500079	SIGN - SMV
3	302031	DECAL, SWITCHES	9	902075	DECAL, KEEP CLEAR
4	302075	DECAL, HOPPER LIFT	10	902149	DECAL, READ OPERATORS MANUAL.
5	302088	DECAL, COOLING FAN REVERSE ROTATION	11	902153	DECAL, ROLLOVER
6	302097	Decal, Ignition			

09/17/2018

RIGHT SIDE DECALS

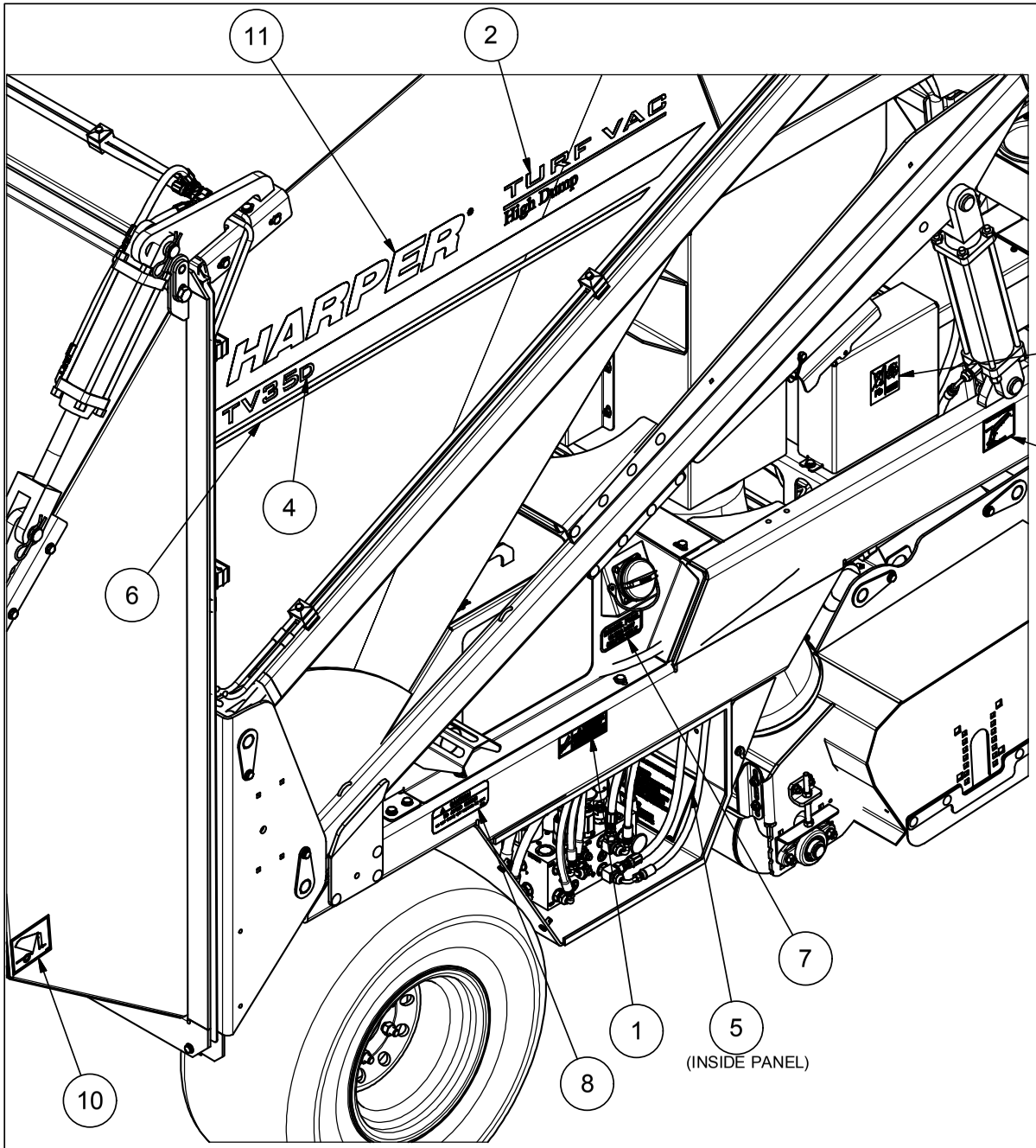

Parts List		
ITEM	PART #	DESCRIPTION
1	160006	DECAL, WARNING HIGH PRESSURE
2	302024	DECAL, TURF VAC HIGH DUMP
3	302032	DECAL, SAFETY LATCH
4	302085	DECAL, "D" ADD ON FOR STRIPE
5	302095	DECAL, HOPPER LIFT INSTRUCTIONS
6	302100	DECAL, STRIPE RIGHT TV30
7	302106	DECAL, DIESEL FUEL
8	500257	DECAL, HOT MUFFLER
9	800195	DECAL, RECYCLE BATTERY
10	902151	DECAL, DOOR SAFETY LOCK
11	902195	DECAL, HARPER 2.87 X 24.00, BLACK GLOSS

04/06/2018

LEFT SIDE DECALS

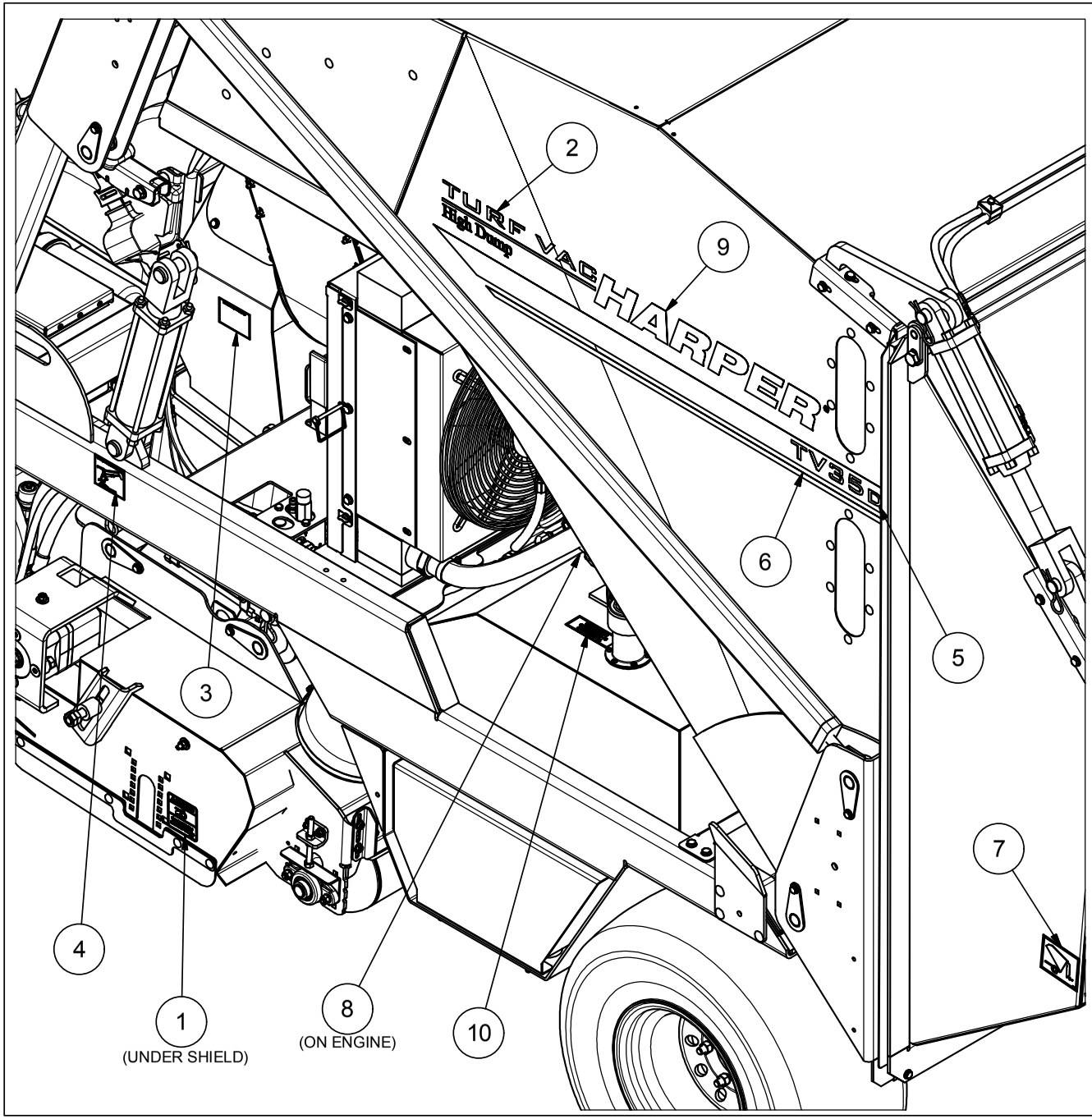

Parts List		
ITEM	PART #	DESCRIPTION
1	160002	Decal, Guard Removed, Graphic
2	302024	DECAL, TURF VAC HIGH DUMP
3	302028	DECAL, CHECK LINER
4	302032	DECAL, SAFETY LATCH
5	302085	DECAL, "D" ADD ON FOR STRIPE
6	302101	DECAL, STRIPE LEFT TV30
7	902151	DECAL, DOOR SAFETY LOCK
8	902186	DECAL, EPA STANDARDS
9	902195	DECAL, HARPER 2.87 X 24.00, BLACK GLOSS
10	902204	DECAL, ISO 46 HYDRAULIC OIL

04/06/2018

HYDRAULIC RESERVOIR ASSEMBLY

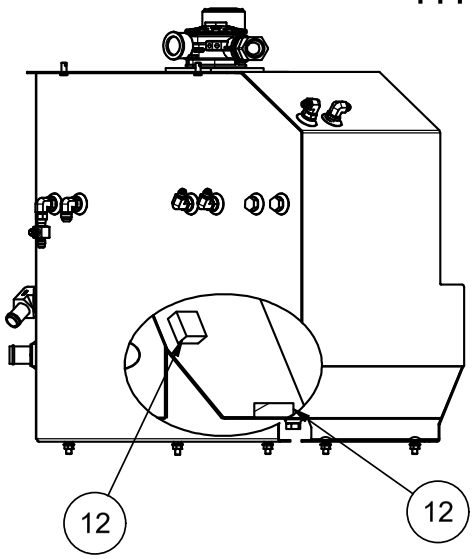

723014 Service Parts	
PART	DESCRIPTION
802041	O-Ring, Cap
822002	Filter, Replacement
822017	Gauge, Oil Filter
822029	Gasket, Return Oil Filter

INSTALLATION INSTRUCTIONS:
APPLY RTV SEALANT TO
GASKETS & BOLT THREADS
ON FILL NECK ASSEMBLY

INSTALLATION INSTRUCTIONS:
APPLY RTV SEALANT TO
GASKETS & BOLT THREADS
ON FILTER ASSEMBLY

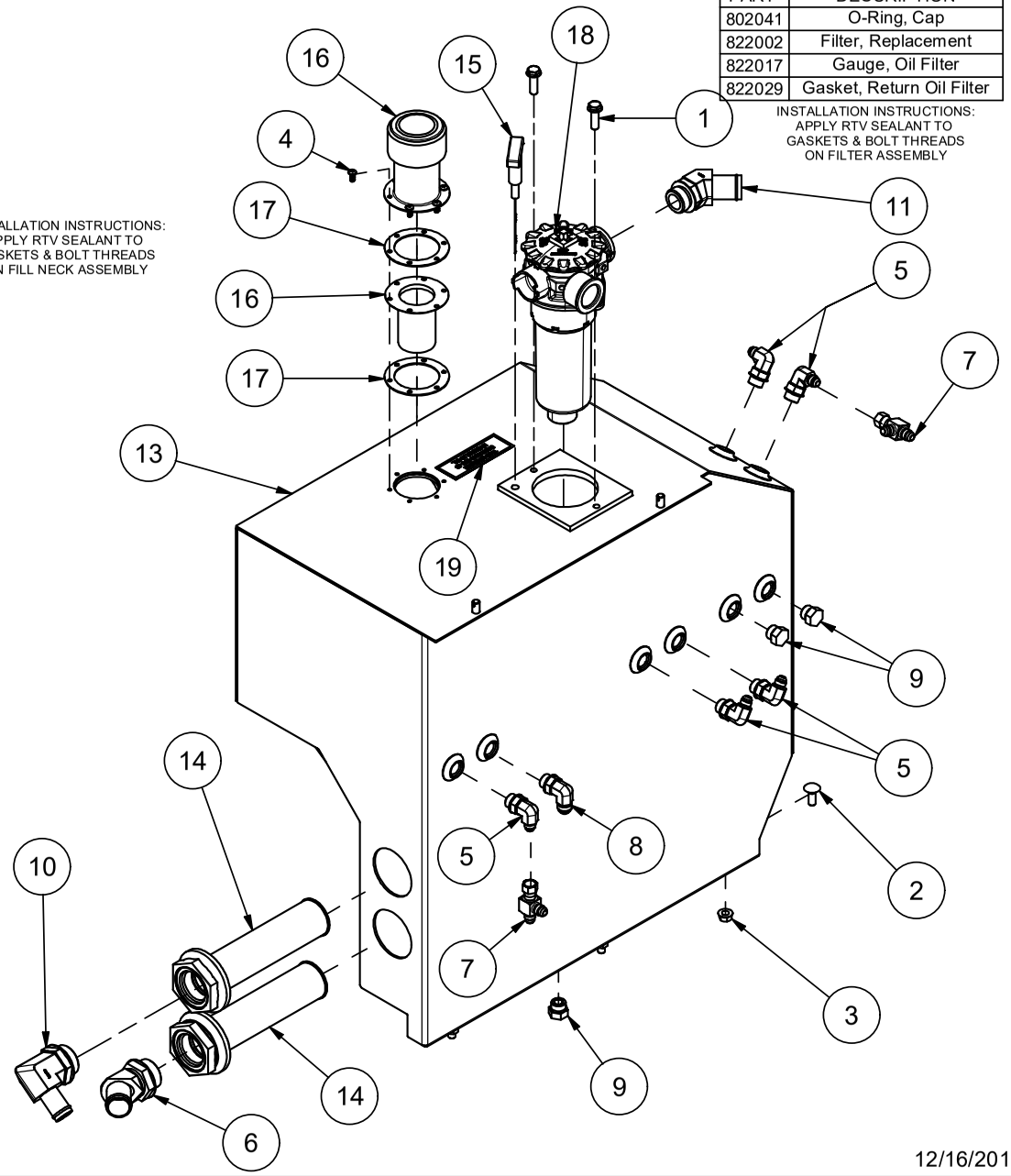

Parts List		
ITEM	PART #	DESCRIPTION
1	110161	BOLT, 3/8-16 X 1.25, WIZ FLANGE
2	110556	Bolt, 3/8-16 X 1 in Carriage
3	110645	NUT, 3/8-16 WIZ FLANGE
4	112053	SCREW, 10-32 X 1/2 MACH SEAL
5	120134	ADAPTER, 6MJ-8MB90
6	120189	ADAPTER, 20BH-20MB 45°
7	120216	ADAPTER, 6MJ-6FJX-6MJ
8	120288	ADAPTER, 8MJ-8MB90
9	120372	PLUG, O-RING -8, EXTERNAL HEX
10	120659	ADAPTER, 16HB-20MB90
11	120677	ADAPTER, 20BH-16MB45
12	312025	MAGNET, 2"x2"x1" RECT 15LB
13	315278	WELDMENT, HYDRAULIC TANK, TV35
14	322012	STRAINER, SUCTION, SAE-32/-20, 25 GPM
15	322025	DIP STICK - TV30, HYDRAULIC TANK
16	322073	FILL NECK
17	722076	Seal, Buna Rubber, Pressurized Fill
18	723014	FILTER ASSY
19	902204	DECAL, ISO 46 HYDRAULIC OIL

12/16/2019

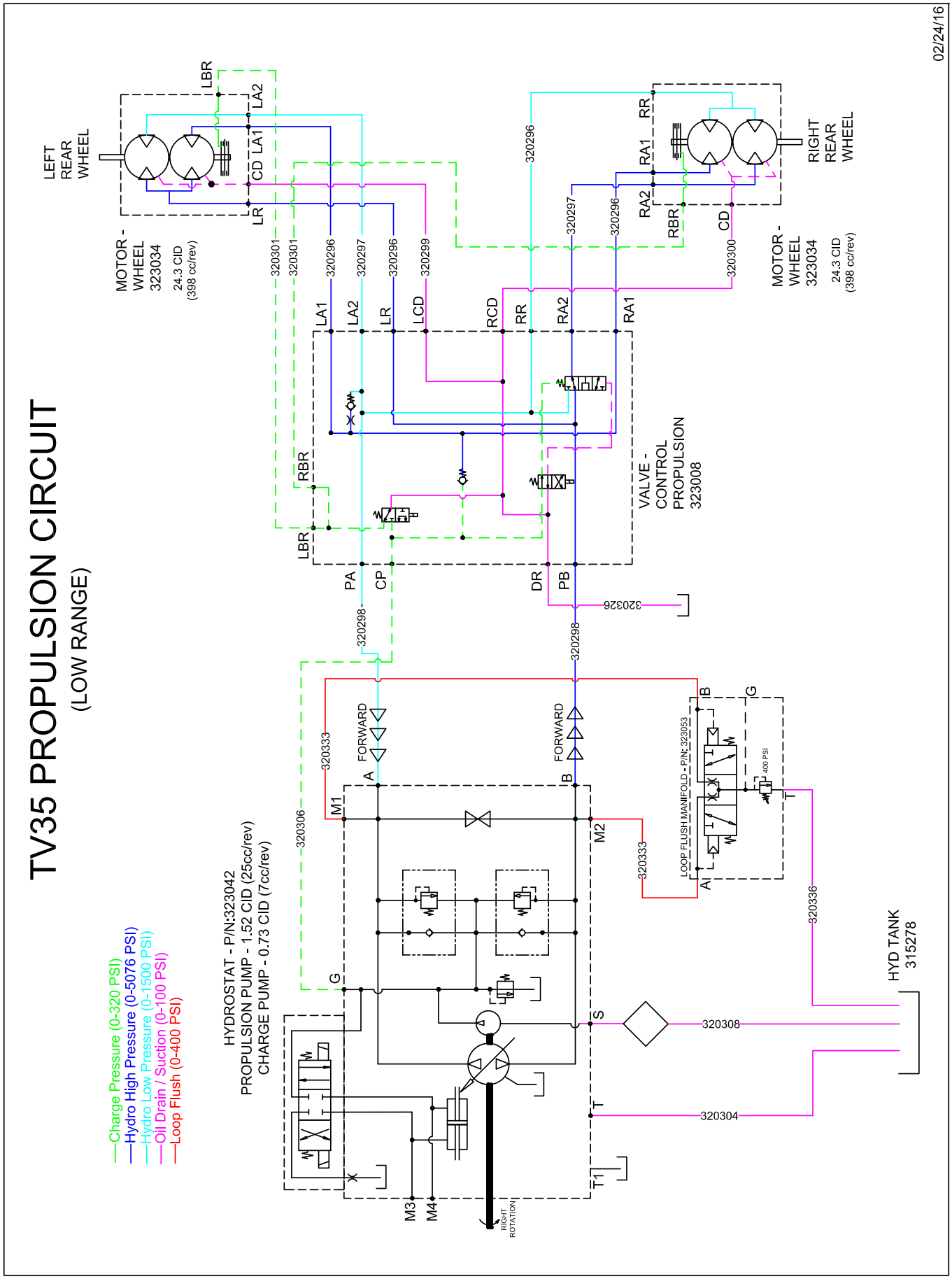

HARPER TURF EQUIPMENT

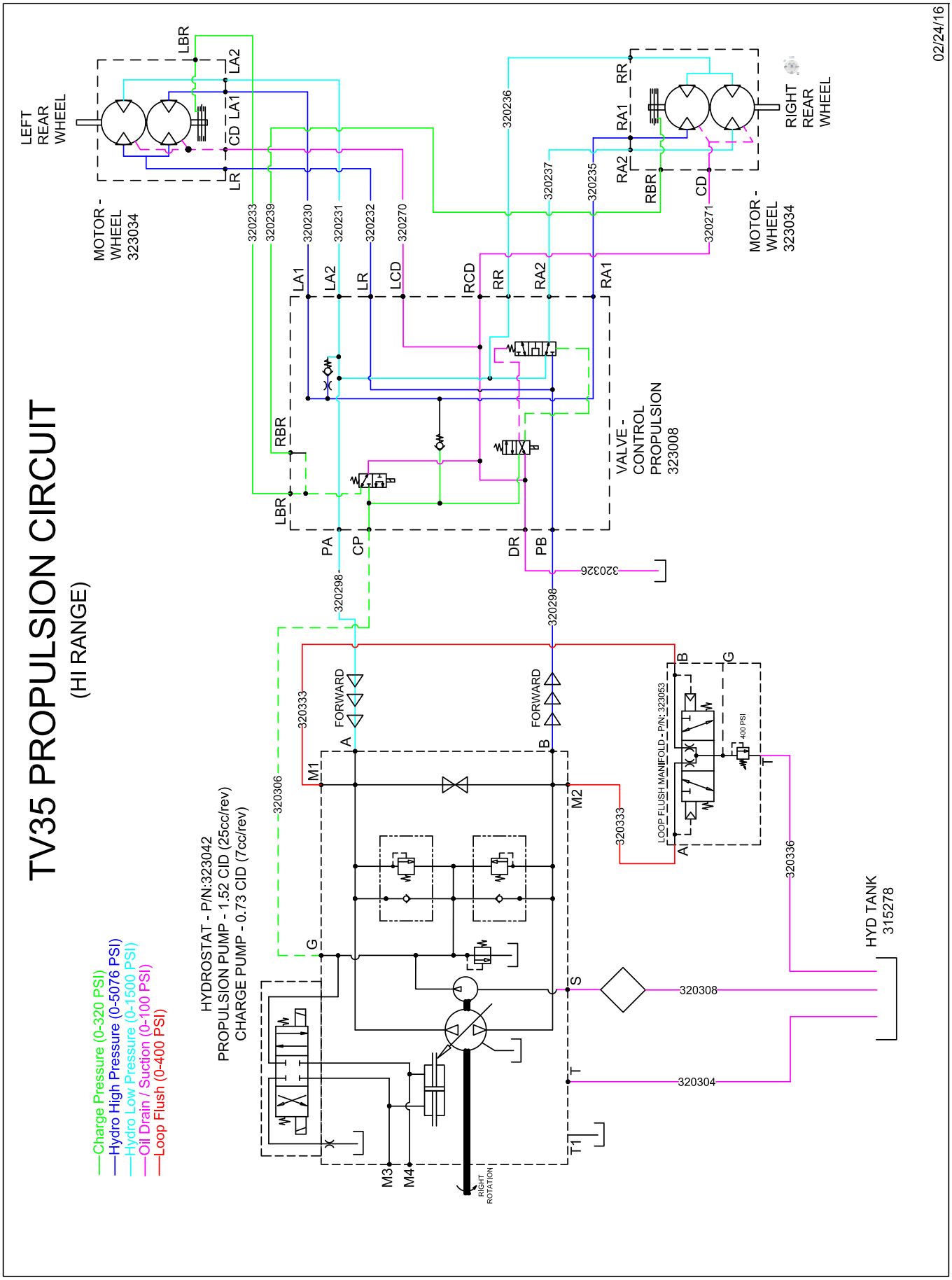
TV35 PROPULSION CIRCUIT
(HI RANGE)
02/24/16
LEFT REAR WHEEL
MOTOR - WHEEL 323034
RIGHT REAR WHEEL
MOTOR - WHEEL 323034
VALVE - CONTROL PROPULSION 323008
HYDROSTAT - P/N:323042
PROPULSION PUMP - 1.52 CID (25cc/rev)
CHARGE PUMP - 0.73 CID (7cc/rev)
LOOP FLUSH MANIFOLD - P/N: 323053
400 PSI
HYD TANK 315278
RIGHT ROTATION
FORWARD
FORWARD
Charge Pressure (0-320 PSI)
Hydro High Pressure (0-5076 PSI)
Hydro Low Pressure (0-1500 PSI)
Oil Drain / Suction (0-100 PSI)
Loop Flush (0-400 PSI)

Propulsion System

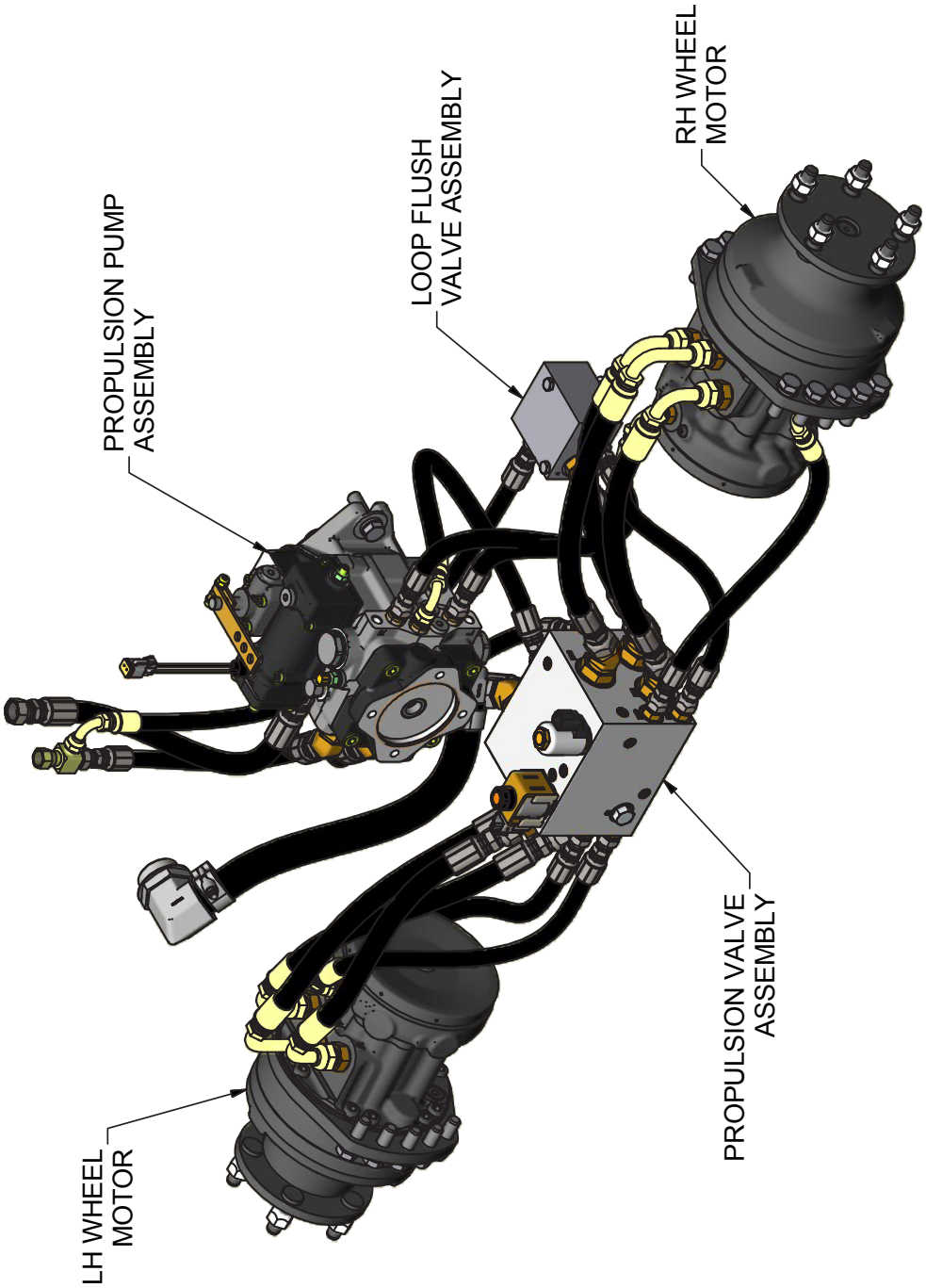

Hoses From Kit: 323052

11/5/2019

Propulsion Pump Assembly

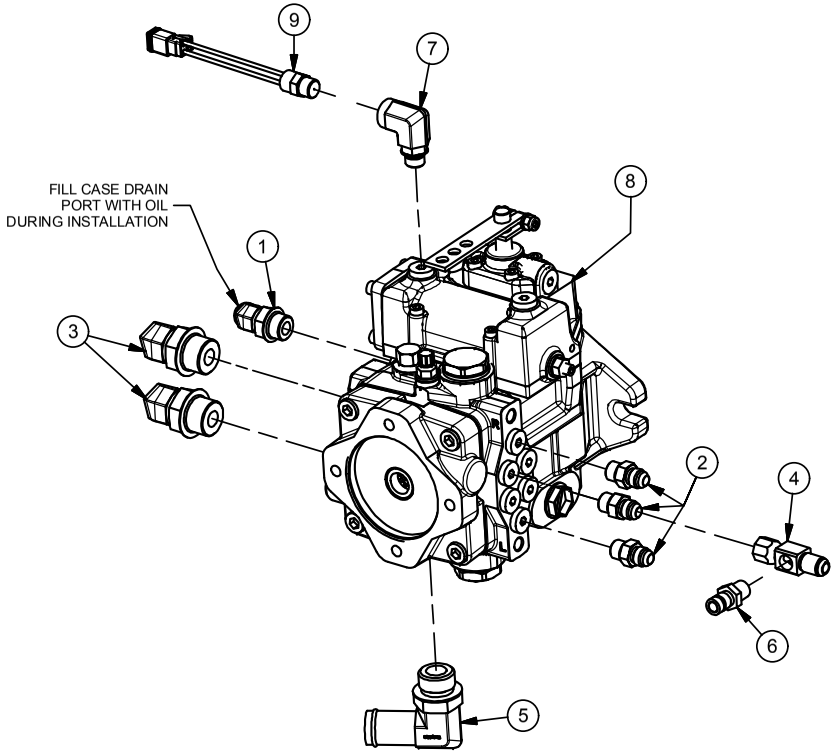

Parts List		
ITEM	PART #	DESCRIPTION
1	120185	ADAPTER, 8MB-8MJ45
2	120319	ADAPTER, 6MJ-6MB
3	120410	ADAPTER, 10MJ-12MB45
4	120483	FITTING, GAGEPORT 6MJ-6FJX-4FP
5	120491	ADAPTER, 16BH-12MB90
6	120521	FITTING - TEST PORT
7	120689	Adapter, 6MB90-6FB
8	323042	Propulsion Pump, Mech Servo Control, 25cc/12cc
9	335003	Switch Assy, Hi-Reverse Lockout Pressure 100 PSI

Wheel Motor Assembly

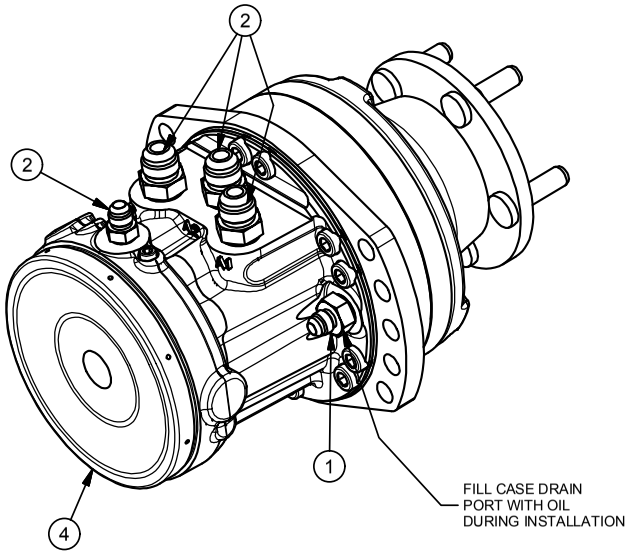

323034 - SERVICE PARTS		
PART #	QTY	DESCRIPTION
311013	5	STUD, WHEEL MOTOR
322072	1	SEAL KIT, WHEEL MOTOR

Parts List		
ITEM	PART #	DESCRIPTION
1	120239	ADAPTER, 6MJ-8MB
2	120251	ADAPTER, 10MJ-10MB
2	120319	ADAPTER, 6MJ-6MB
4	323034	MOTOR, POCLAIN HYD WHEEL

12/19/2016

Propulsion Valve Assembly

Parts List		
ITEM	PART #	DESCRIPTION
1	110437	BOLT, 3/8-16 X 0.75, WIZ FLANGE
2	120219	ADAPTER, 6MJ-6MB 45
3	120319	ADAPTER, 6MJ-6MB
4	120410	ADAPTER, 10MJ-12MB45
5	323008	VALVE, TV30 PROPULSION CONTROL

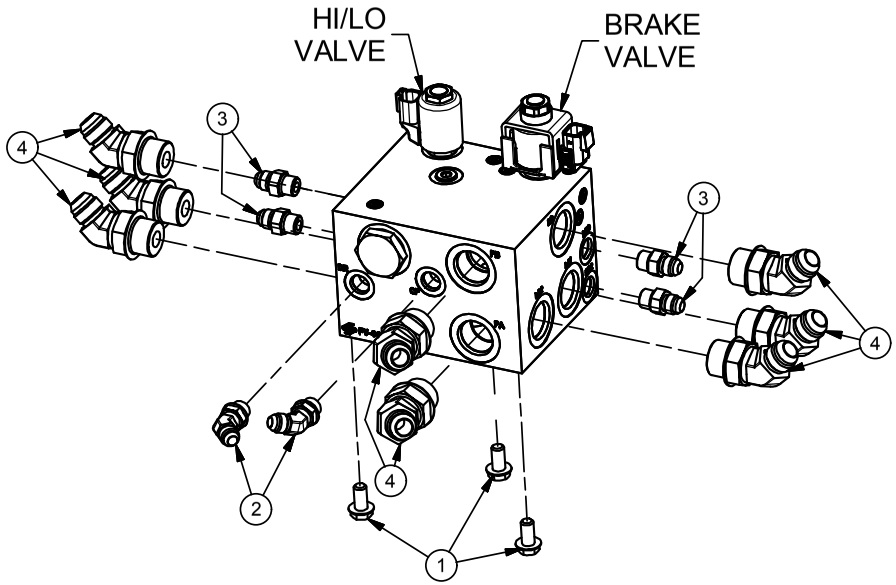

323008 - SERVICE PARTS	
PART #	DESCRIPTION
522119	3-POS 4-WAY SOLENOID VALVE (HI/LO)
322053	12VDC DEUTSCH COIL S SERIES (HI/LO)
322054	2-POS 3-WAY SOLENOID VALVE (BRAKE)
322052	12VDC DEUTSCH COIL (BRAKE)

Loop Flush Valve Assembly

Parts List		
ITEM	PART #	DESCRIPTION
1	120239	ADAPTER, 6MJ-8MB
2	323053	VALVE, LOOP FLUSH

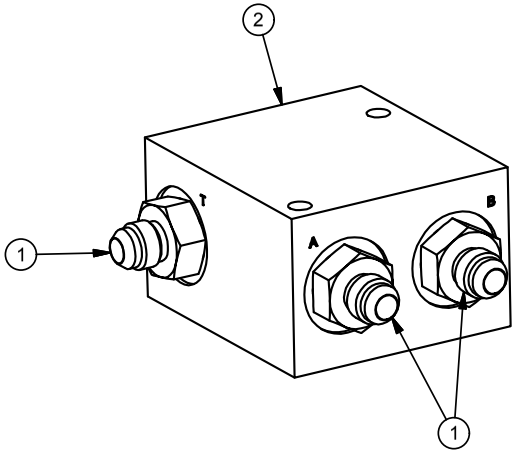

2/23/2016

HARPER TURF EQUIPMENT

Propulsion Pump Plumbing

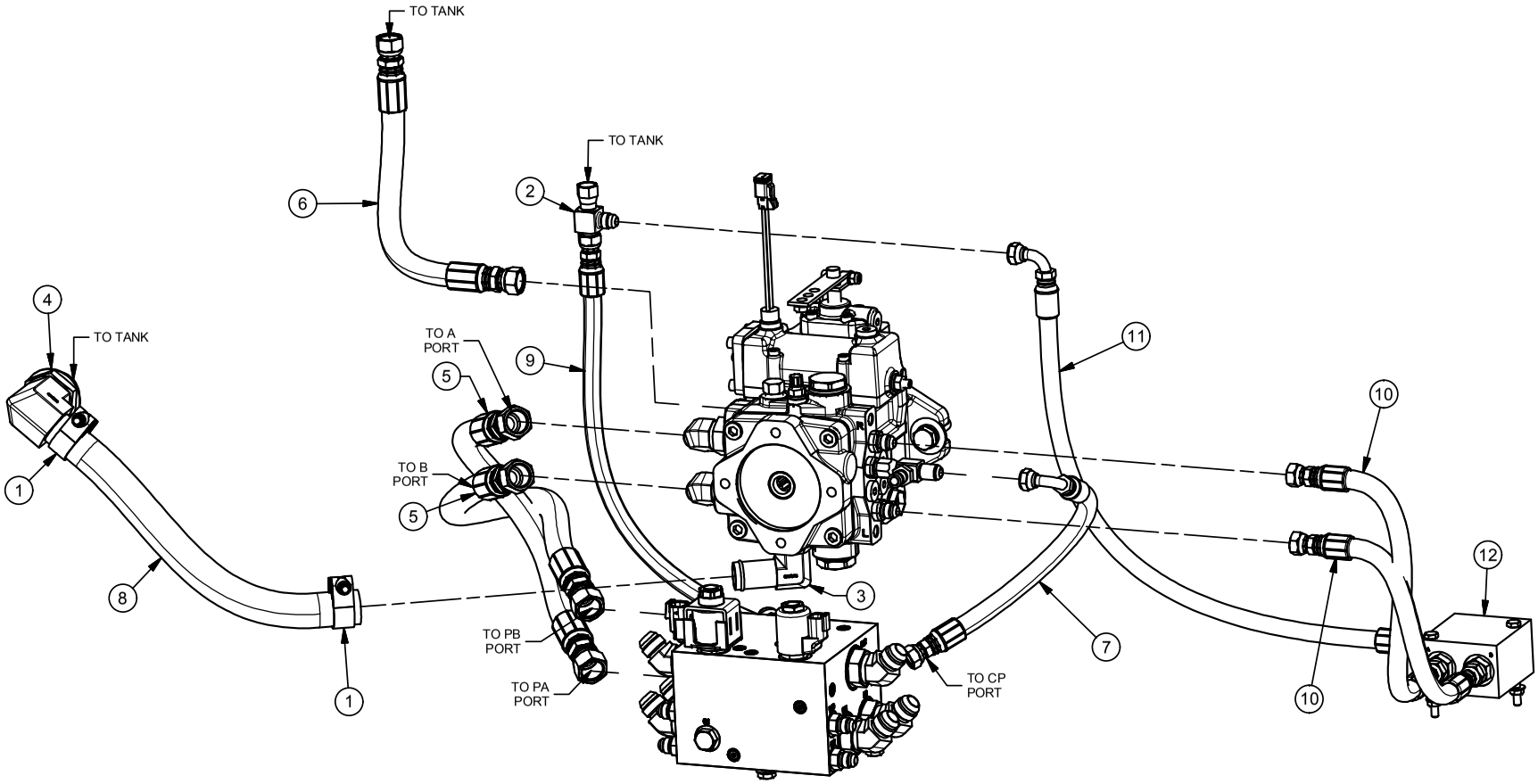

Parts List			Parts List		
ITEM	PART #	DESCRIPTION	ITEM	PART #	DESCRIPTION
1	112044	CLAMP, 1.5", T-BOLT	7	320306	HOSE ASSY, PROPULSION BRAKE / CP
2	120216	ADAPTER, 6MJ-6FJX-6MJ	8	320308	HOSE, PROPULSION SUCTION
3	120491	ADAPTER, 16BH-12MB90	9	320326	HOSE ASSY, PROP VALVE TO TANK
4	120659	ADAPTER, 16HB-20MB90	10	320333	HOSE ASSY, LOOP FLUSH
5	320298	HOSE ASSY, PROP PUMP PRESS - PA,PB	11	320336	HOSE ASSY, LOOP FLUSH TO TANK
6	320304	HOSE ASSY, PROP PUMP TO TANK	12	323053	VALVE, LOOP FLUSH

2/24/2016

Wheel Motor Plumbing

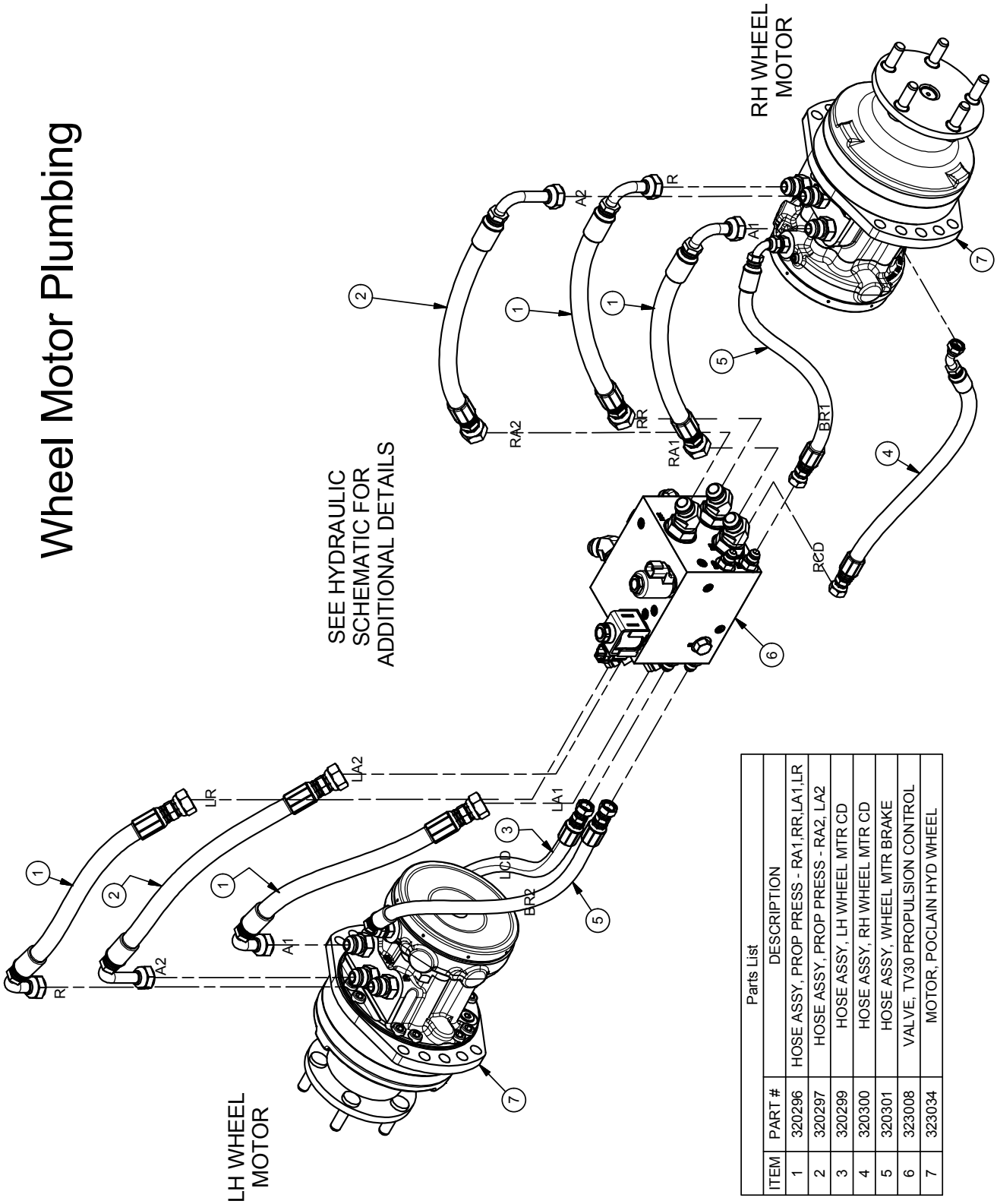

Parts List

ITEM	PART #	DESCRIPTION
1	320296	HOSE ASSY, PROP PRESS - RA1,RR,LA1,LR
2	320297	HOSE ASSY, PROP PRESS - RA2, LA2
3	320299	HOSE ASSY, LH WHEEL MTR CD
4	320300	HOSE ASSY, RH WHEEL MTR CD
5	320301	HOSE ASSY, WHEEL MTR BRAKE
6	323008	VALVE, TV30 PROPULSION CONTROL
7	323034	MOTOR, POCLAIN HYD WHEEL

Machine System

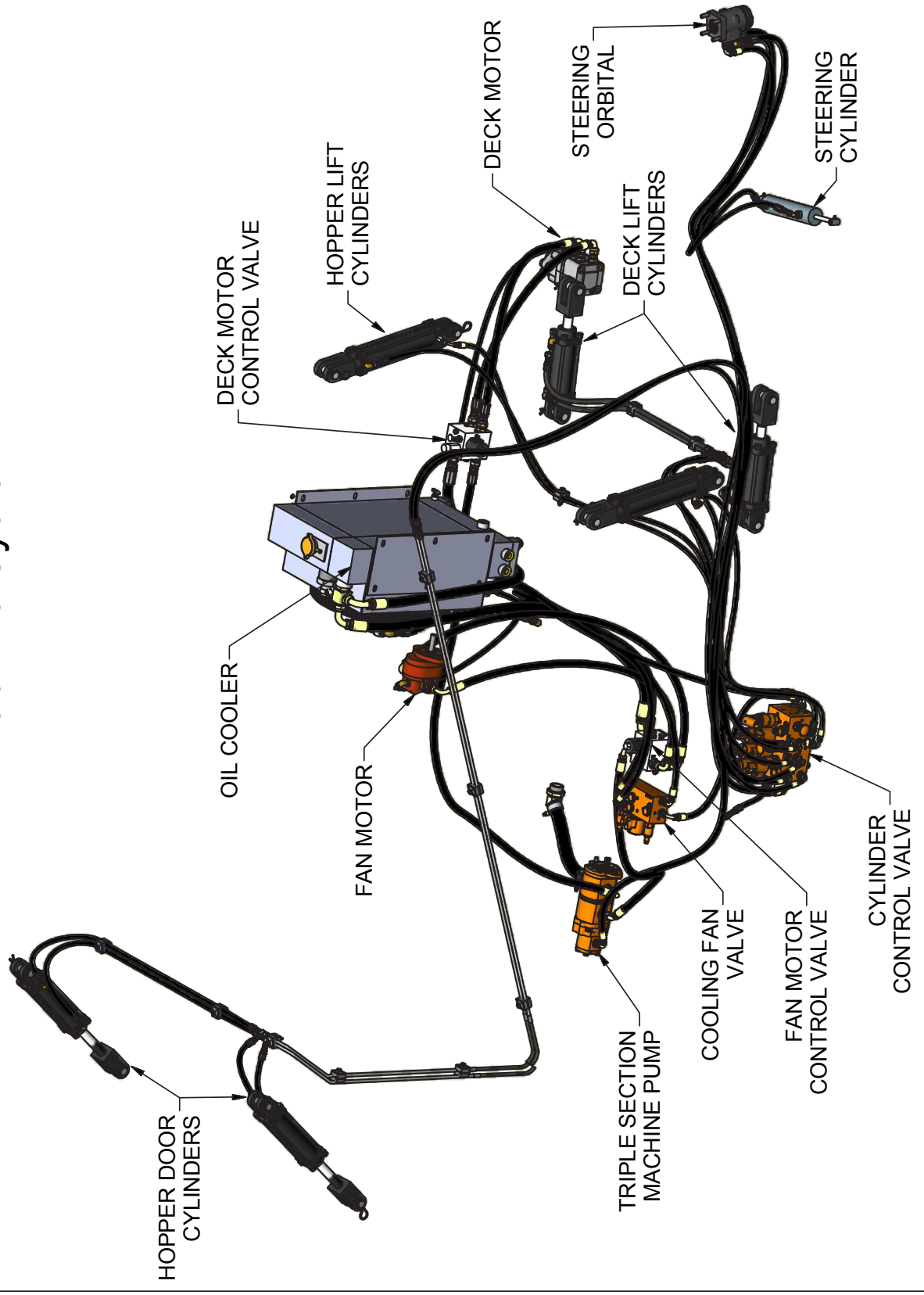

Hoses From Kit: 323052

11/5/2019

TV35 MACHINE CIRCUITS (DECK & FAN DRIVES, CYLINDER FUNCTIONS)

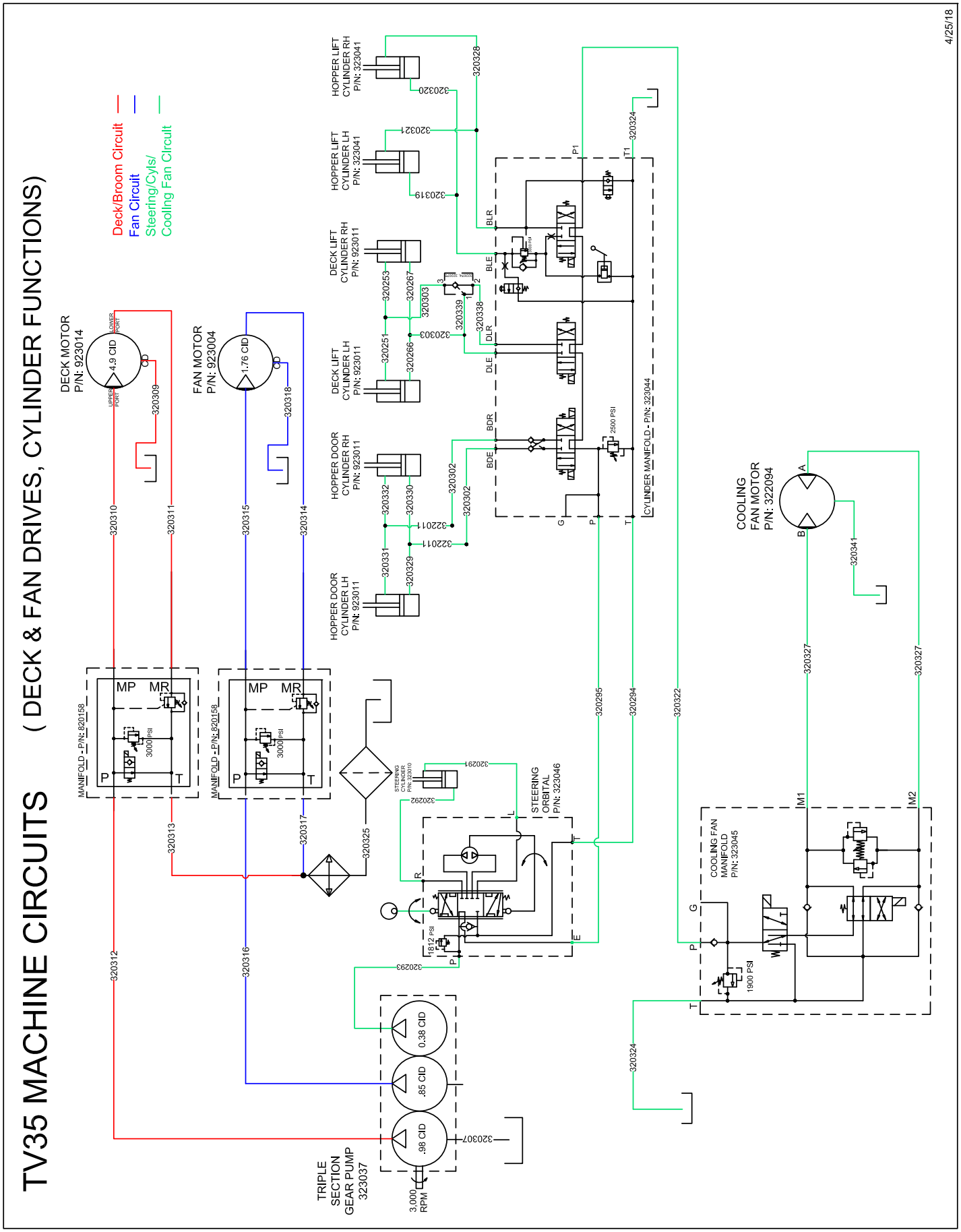

Triple Section Machine Pump Assembly

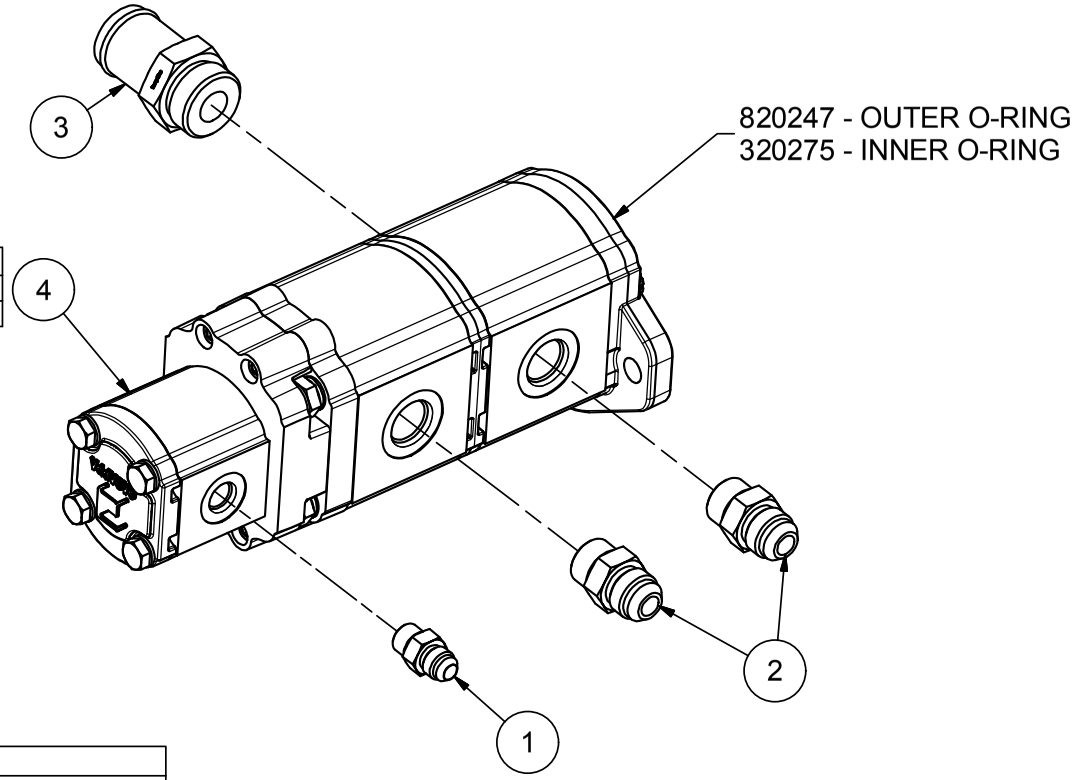

323037 - SERVICE PARTS	
PART #	DESCRIPTION
325007	SEAL KIT, TRIPLE SECTION PUMP

Parts List		
ITEM	PART #	DESCRIPTION
1	120319	ADAPTER, 6MJ-6MB
2	120251	ADAPTER, 10MJ-10MB
3	120373	ADAPTER, 20BH-16MB
4	323037	PUMP, TRIPLE SECTION (16.8, 14.5, 5.8 cc)

2/24/2016

Triple Section Pump Plumbing

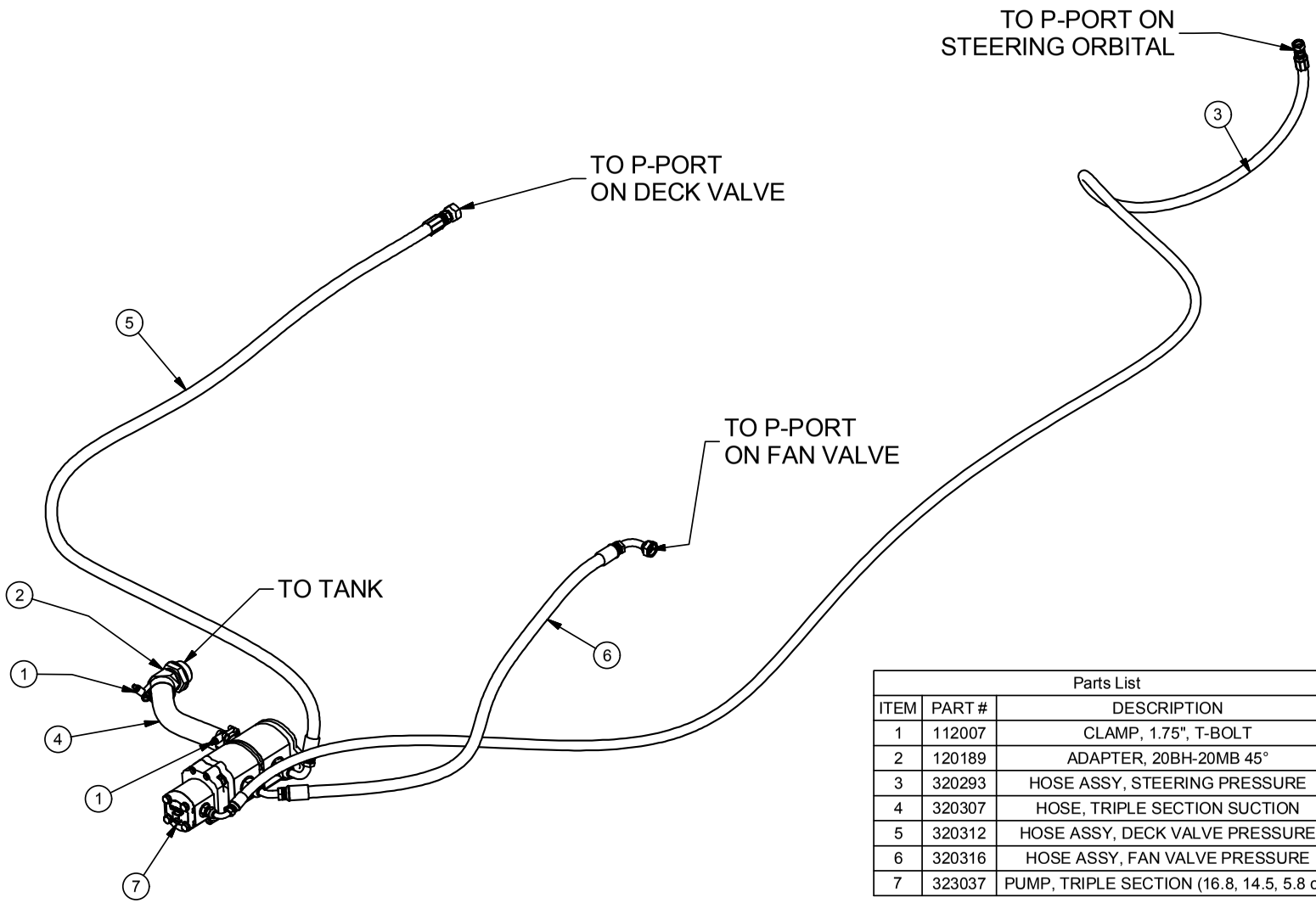

Parts List		
ITEM	PART #	DESCRIPTION
1	112007	CLAMP, 1.75", T-BOLT
2	120189	ADAPTER, 20BH-20MB 45°
3	320293	HOSE ASSY, STEERING PRESSURE
4	320307	HOSE, TRIPLE SECTION SUCTION
5	320312	HOSE ASSY, DECK VALVE PRESSURE
6	320316	HOSE ASSY, FAN VALVE PRESSURE
7	323037	PUMP, TRIPLE SECTION (16.8, 14.5, 5.8 cc)

2/24/2016

Deck Plumbing

Parts List			Parts List		
ITEM	PART #	DESCRIPTION	ITEM	PART #	DESCRIPTION
1	110290	NUT, 1/4-20 WIZ FLANGE	25	320339	HOSE ASSY, DLE PILOT
2	110298	WASHER, 1/4" FLAT SAE	26	322074	VALVE, PO CHECK
3	110354	BOLT, 1/4-20 X 2.0 HEX HEAD	27	322075	VALVE BODY, 3-WAY SAE-6
4	110474	BOLT, 1/4-20 X 1-1/2	28	323018	CYLINDER - 2 x 4, SAE-6, TIE ROD
5	110529	BOLT, 5/16-18 X 4.5	29	323044	VALVE, CYLINDER MANIFOLD
6	110606	NUT, 5/16-18 WIZ FLANGE	30	522104	DOUBLE HOSE CLAMP
7	110667	WASHER, 1/4" LOCK	31	522105	DOUBLE COVERPLATE
8	120134	ADAPTER, 6MJ-8MB90	32	820158	DECK VALVE
9	120222	ADAPTER, 6MJ-6MB90	33	923014	MOTOR, 4.9 CID
10	120241	ADAPTER, 4MJ-4MJ-4MJ			
11	120251	ADAPTER, 10MJ-10MB			
12	120319	ADAPTER, 6MJ-6MB			
13	120444	ADAPTER, 12MJ-16MB-12MJ			
14	120665	ADAPTER, 6MJ-4MB			
15	320251	HOSE - DECK, LEFT FRONT			
16	320253	HOSE - DECK, RIGHT FRONT			
17	320266	HOSE - DECK, LEFT REAR			
18	320267	HOSE DECK, RIGHT REAR			
19	320303	HOSE ASSY, DECK LIFT			
20	320309	HOSE ASSY, DECK MTR CD			
21	320310	HOSE ASSY, DECK MTR PRESSURE			
22	320311	HOSE ASSY, DECK MTR RETURN			
23	320313	HOSE ASSY, DECK VALVE RETURN			
24	320338	HOSE ASSY, DLR PRESS			

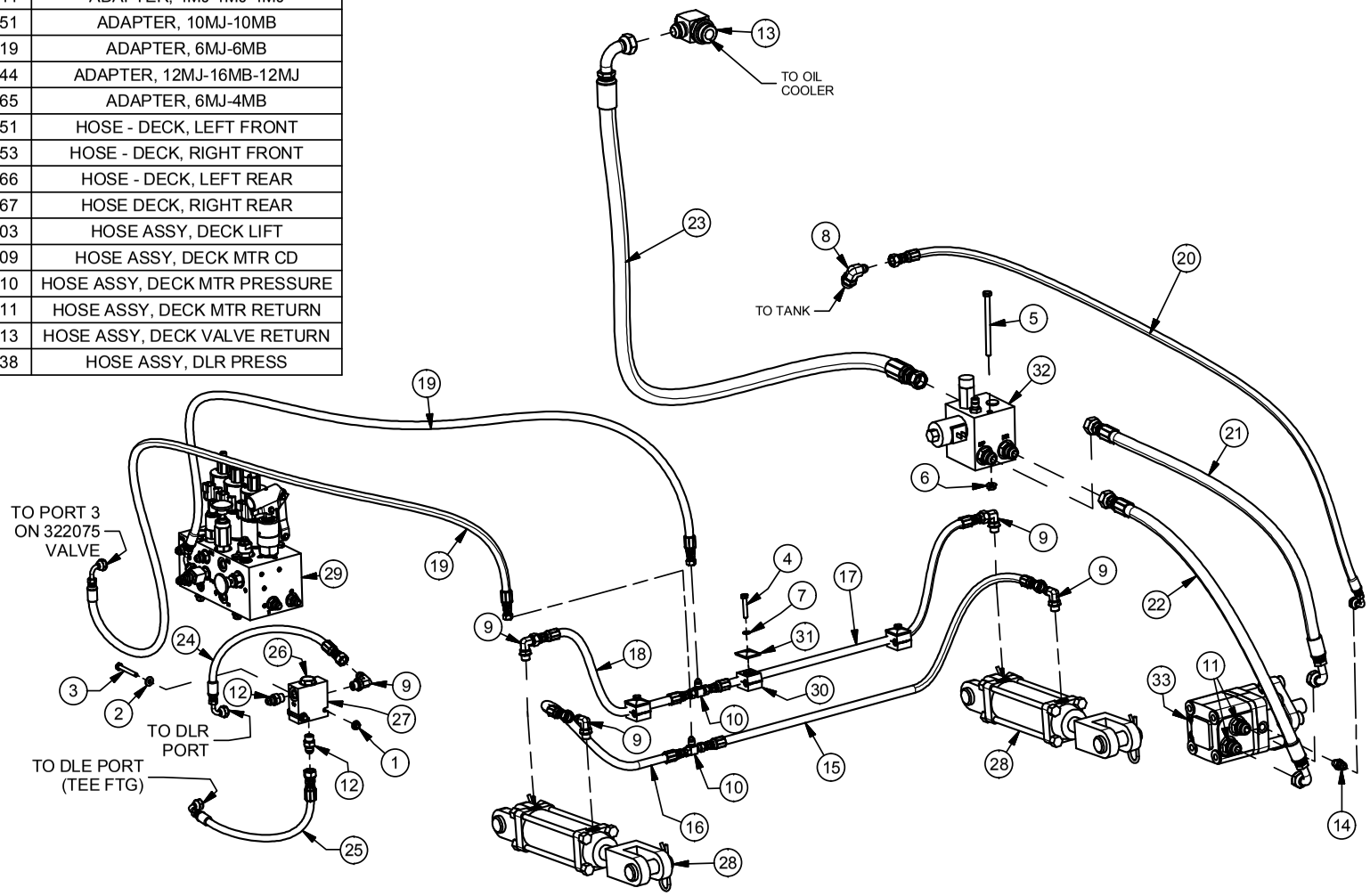

9/27/2017

Fan Plumbing

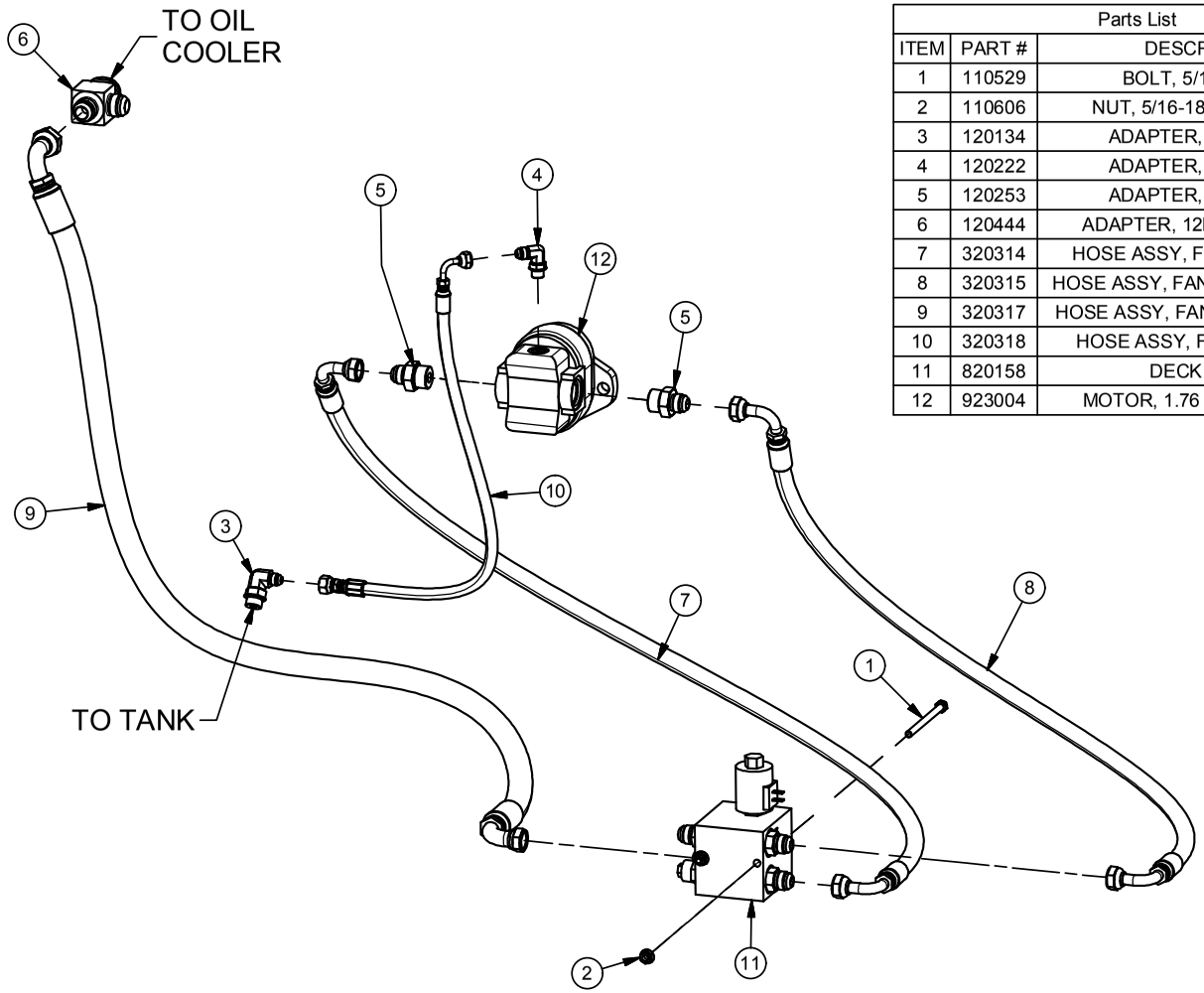

Parts List		
ITEM	PART #	DESCRIPTION
1	110529	BOLT, 5/16-18 X 4.5
2	110606	NUT, 5/16-18 WIZ FLANGE
3	120134	ADAPTER, 6MJ-8MB90
4	120222	ADAPTER, 6MJ-6MB90
5	120253	ADAPTER, 10MJ-12MB
6	120444	ADAPTER, 12MJ-16MB-12MJ
7	320314	HOSE ASSY, FAN MTR PRESS
8	320315	HOSE ASSY, FAN MTR PRESSURE
9	320317	HOSE ASSY, FAN VAVLE RETURN
10	320318	HOSE ASSY, FAN MOTOR CD
11	820158	DECK VALVE
12	923004	MOTOR, 1.76 CI, FAN DRIVE

4/15/2016

Fan & Deck Valve Assembly

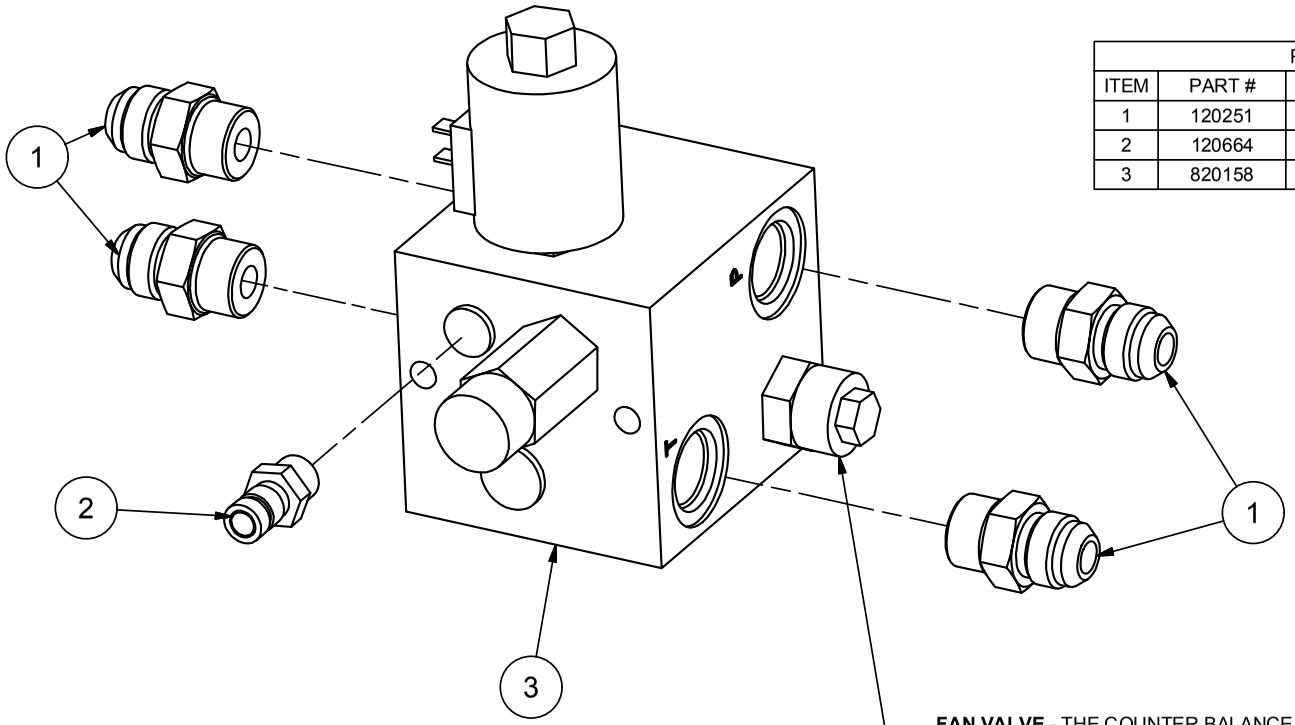

Parts List		
ITEM	PART #	DESCRIPTION
1	120251	ADAPTER, 10MJ-10MB
2	120664	Adapter, Test Port -6MB
3	820158	VALVE, FAN/DECK

820158 - SERVICE PARTS	
PART	DESCRIPTION
820229	COIL, 12VDC DEUTSCH "ER"
820230	VALVE, COUNTER BALANCE
820231	RELIEF, 3000 PSI PRESSURE
820232	VALVE, N.O. SOLENOID CARTRIDGE

FAN VALVE - THE COUNTER BALANCE VALVE WILL INTIALLY BE SET SO THAT THE IMPELLER FAN HAS APPROXIMATELY A 3-5 SECOND SPINDOWN.

DECK VALVE - THE DECK VALVE WILL NEED TO BE ADJUSTED AFTER THE ROTOR IS INSTALLED. INTIALLY, THE COUNTER BALANCE IS ADJUSTED ALL THE WAY OUT.

ADJUSTING THE COUNTER BALANCE VALVE - THE SPINDOWN FOR THE IMPELLER FAN AND THE DECK ROTOR SHOULD BOTH BE BETWEEN 3-5 SECONDS. FOR ADJUSMENT, LOOSEN THE JAM NUT AND THEN TURN THE SET SCREW ABOUT A 1/4 TURN. FOR A SLOWER SPINDOWN, LOOSEN THE SET SCREW. FOR A QUICKER SPINDOWN, TIGHTEN THE SET SCREW. REPEAT UNTIL THE SPINDOWN IS BETWEEN 3-5 SECONDS, THEN TIGHTEN JAM NUT.

10/4/2017

Steering Plumbing

Parts List		
ITEM	PART #	DESCRIPTION
1	111055	STUD, M10 X 1.5 X 42 GRADE 8.8
2	120027	ADAPTER, 4MB-4MJ 45
3	120222	ADAPTER, 6MJ-6MB90
4	120319	ADAPTER, 6MJ-6MB
5	320291	HOSE ASSY, LEFT STEERING
6	320292	HOSE ASSY, RIGHT STEERING
7	320293	HOSE ASSY, STEERING PRESSURE
8	320294	HOSE ASSY, STEERING TO TANK
9	320295	HOSE ASSY, STEERING POWER BEYOND
10	323010	CYLINDER - STEERING, 1-3/4 X 6
11	323046	MOTOR, STEERING ORBITAL
12	510174	GREASE ZERK, 1/4-28 ST

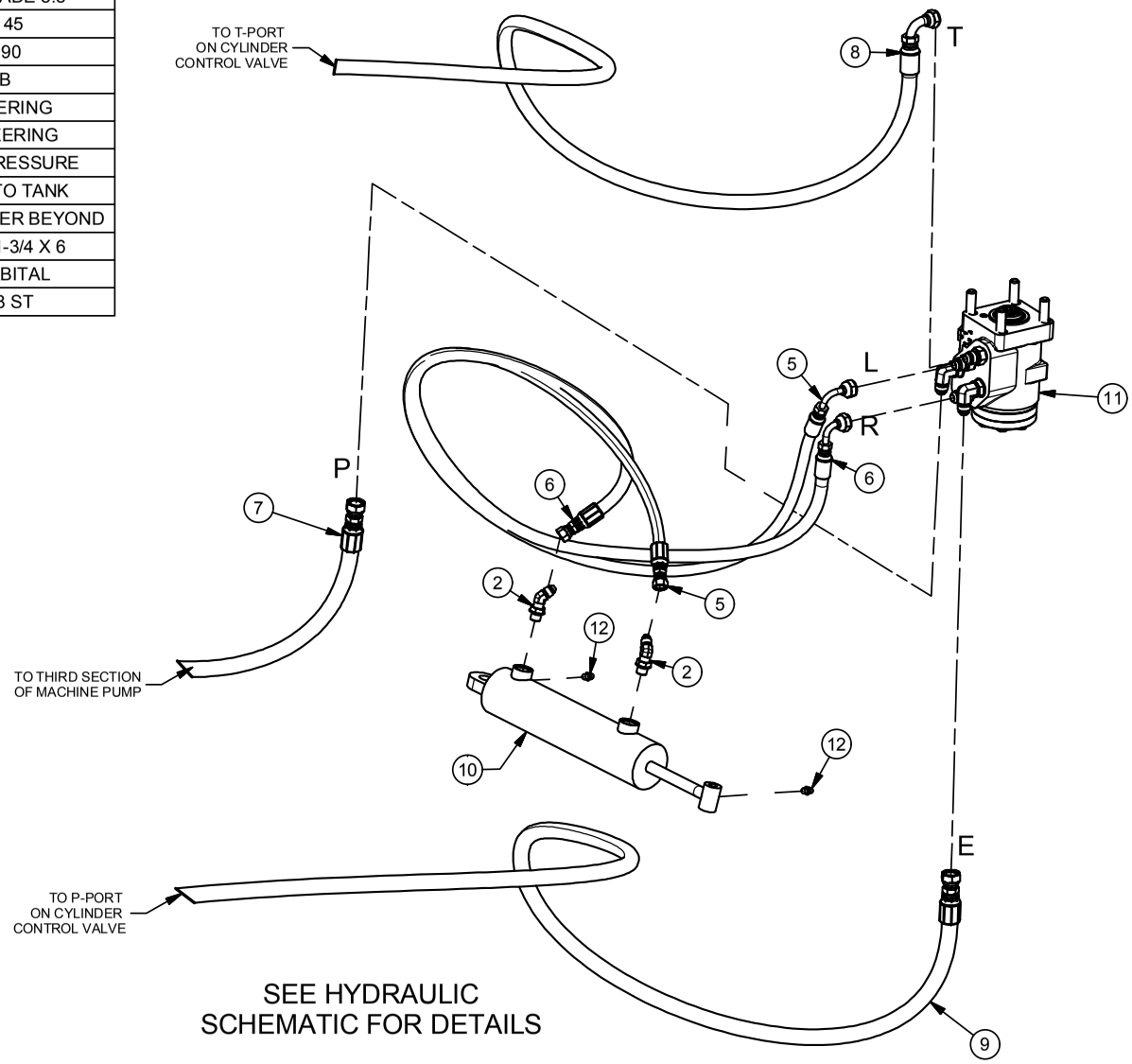

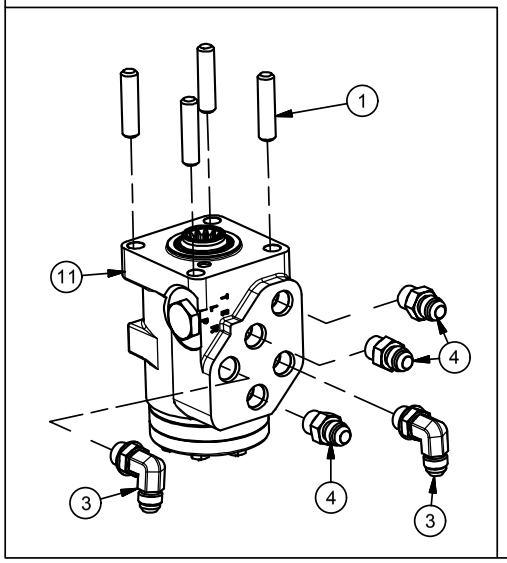

10/2/2017

HARPER
TURF EQUIPMENT

Cylinder Control Valve Assembly & Plumbing

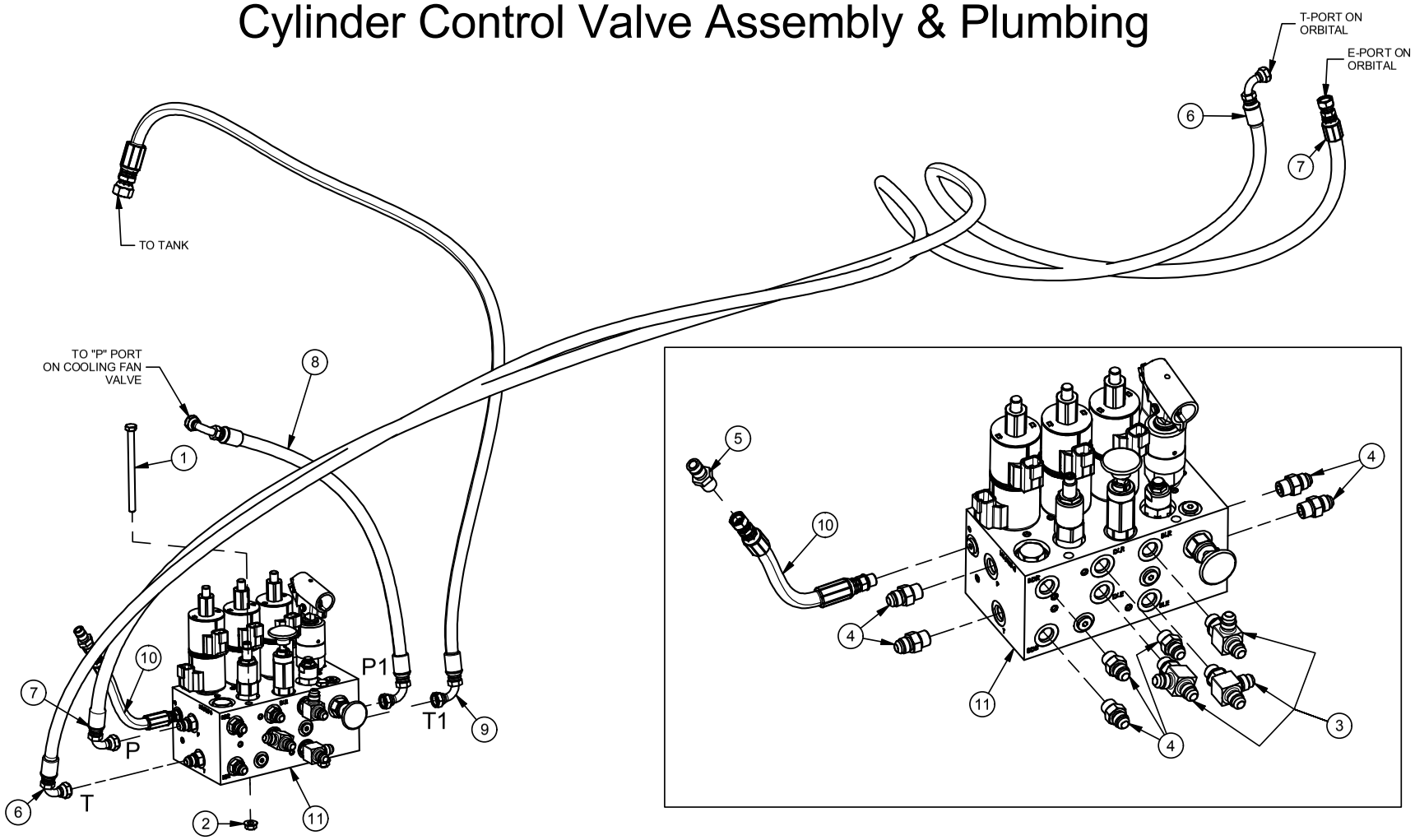

Parts List			Parts List		
ITEM	PART #	DESCRIPTION	ITEM	PART #	DESCRIPTION
1	110529	BOLT, 5/16-18 X 4.5	7	320295	HOSE ASSY, STEERING POWER BEYOND
2	110606	NUT, 5/16-18 WIZ FLANGE	8	320322	HOSE ASSY, COOLING FAN PRESSURE
3	120279	ADAPTER, 6MJ-6MB-6MJ	9	320324	HOSE ASSY, CYL & COOLING VALVE TO TANK
4	120319	ADAPTER, 6MJ-6MB	10	320335	HOSE ASSY, TEST PORT
5	120521	FITTING - TEST PORT	11	323044	VALVE, CYLINDER MANIFOLD
6	320294	HOSE ASSY, STEERING TO TANK			

323044 Service Parts	
PART #	DESCRIPTION
322086	Counter Balance Valve, 3000 PSI
522163	Coil, #10 Hydraforce, DT04-02P
820234	Spool Leveling & Lift Valve

12/11/2018

Hopper Plumbing

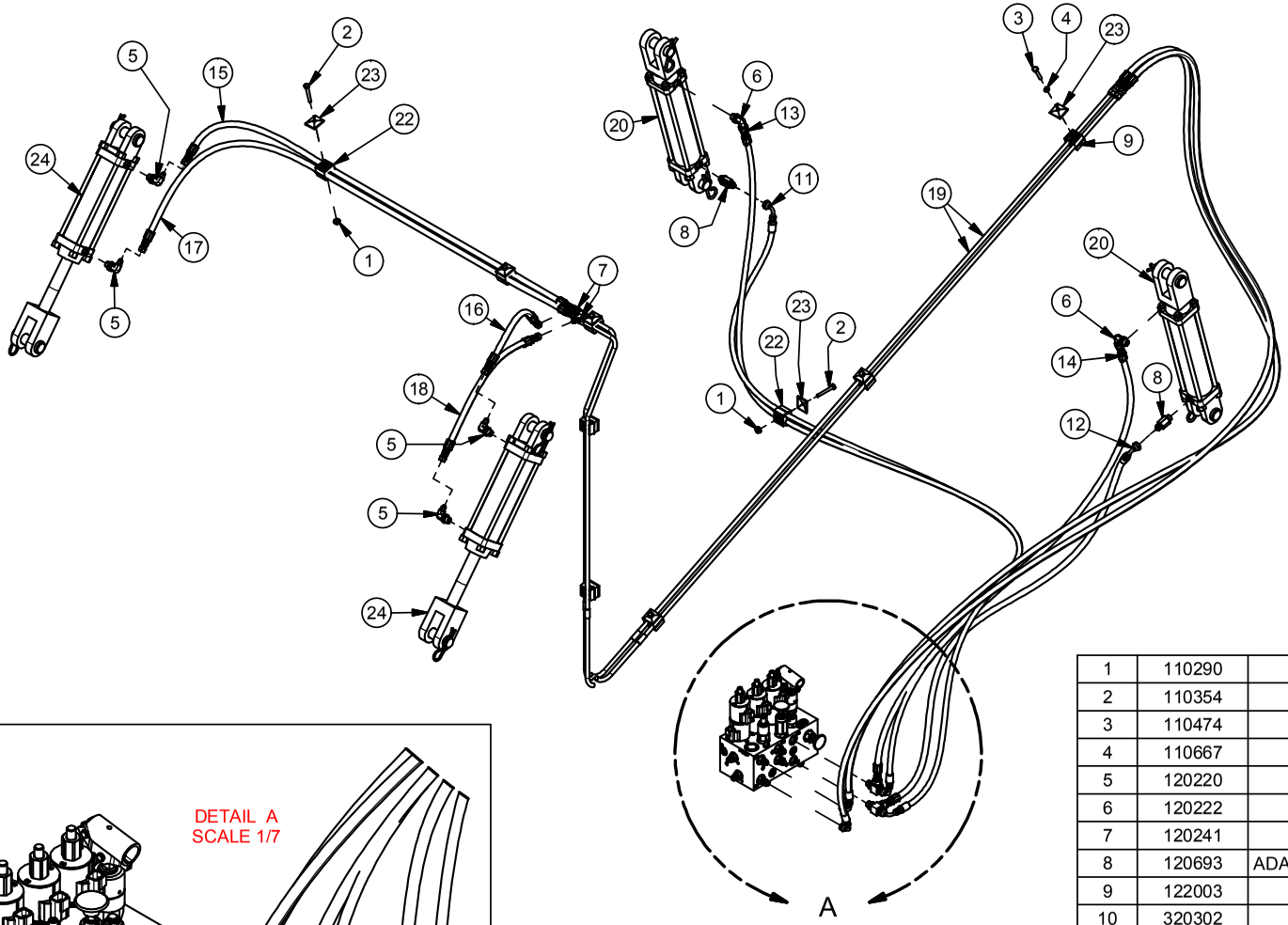

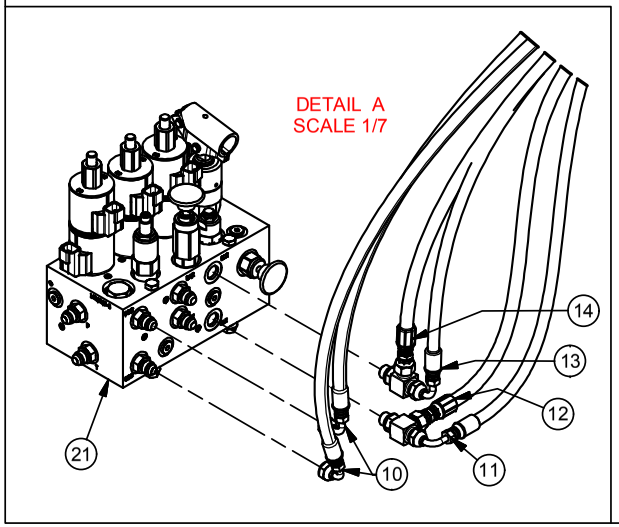

2/25/2016

ITEM	PART #	DESCRIPTION
1	110290	NUT, 1/4-20 WIZ FLANGE
2	110354	BOLT, 1/4-20 X 2.0 HEX HEAD
3	110474	BOLT, 1/4-20 X 1-1/2
4	110667	WASHER, 1/4" LOCK
5	120220	ADAPTER, 4MJ-6MB90
6	120222	ADAPTER, 6MJ-6MB90
7	120241	ADAPTER, 4MJ-4MJ-4MJ
8	120693	ADAPTER - VELOCITY, 4 GPM, 6MB-6MJ
9	122003	DOUBLE HOSE CLAMP
10	320302	HOSE ASSY, HOPPER DOOR
11	320319	HOSE ASSY, LH HOPPER EXTEND
12	320320	HOSE ASSY, RH HOPPER EXTEND
13	320321	HOSE ASSY, LH HOPPER RETRACT
14	320328	HOSE ASSY, RH HOPPER RETRACT
15	320329	HOSE ASSY, LH DOOR EXTEND
16	320330	HOSE ASSY, RH DOOR EXTEND
17	320331	HOSE ASSY, LH DOOR RETRACT
18	320332	HOSE ASSY, RH DOOR RETRACT
19	322011	STEEL HOSE ASSY, HOPPER ARM
20	323041	CYLINDER - 2.5 X 8, SAE-6
21	323044	VALVE, CYLINDER MANIFOLD
22	522104	DOUBLE HOSE CLAMP
23	522105	DOUBLE COVERPLATE
24	923011	Cylinder, 2 X 6, -6 SAE Cross

Parts List

Parts List

HARPER TURF EQUIPMENT

Cooling Fan Plumbing

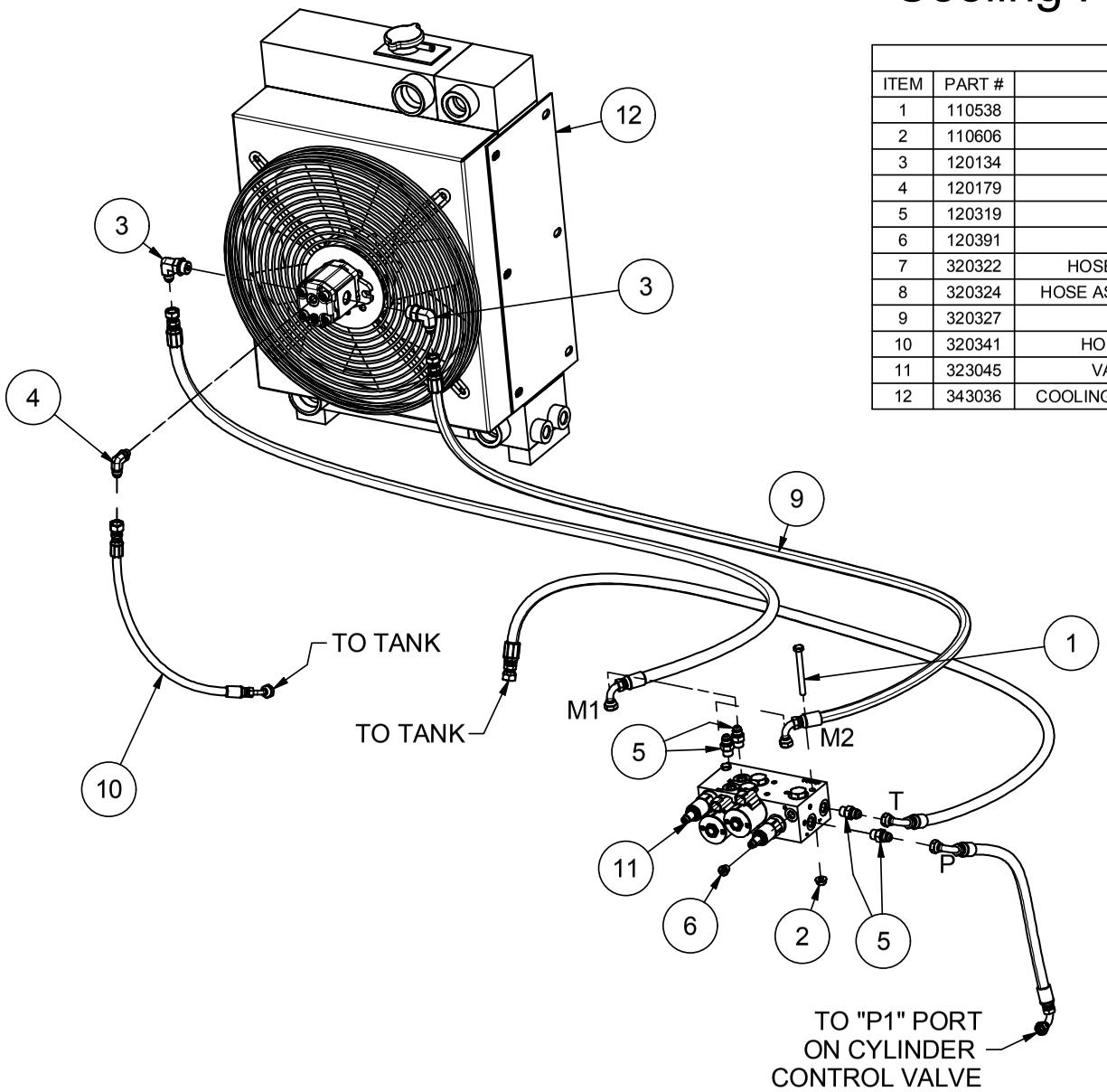

Parts List		
ITEM	PART #	DESCRIPTION
1	110538	BOLT, 5/16-18 X 3.0
2	110606	NUT, 5/16-18 WIZ FLANGE
3	120134	ADAPTER, 6MJ-8MB90
4	120179	ADAPTER, 6MJ-4MB90
5	120319	ADAPTER, 6MJ-6MB
6	120391	PLUG, 4MB, INT SH
7	320322	HOSE ASSY, COOLING FAN PRESSURE
8	320324	HOSE ASSY, CYL & COOLING VALVE TO TANK
9	320327	HOSE ASSY, COOLING FAN
10	320341	HOSE ASSY, COOLING FAN MTR CD
11	323045	VALVE, COOLING FAN MANIFOLD
12	343036	COOLING PACKAGE, RADIATOR & OIL COOLER

343036 Service Parts	
PART #	DESCRIPTION
312029	Fan, Cooling
312030	Mount, Finger Guard/Mount
312031	Cap, Radiator
322094	Motor, hydraulic 0.22CI
332038	Switch, 140F, 8MB, NC
332039	Switch, 165F, 8MB, NC
332041	Switch, 190F, 8MB, NO

12/11/2018

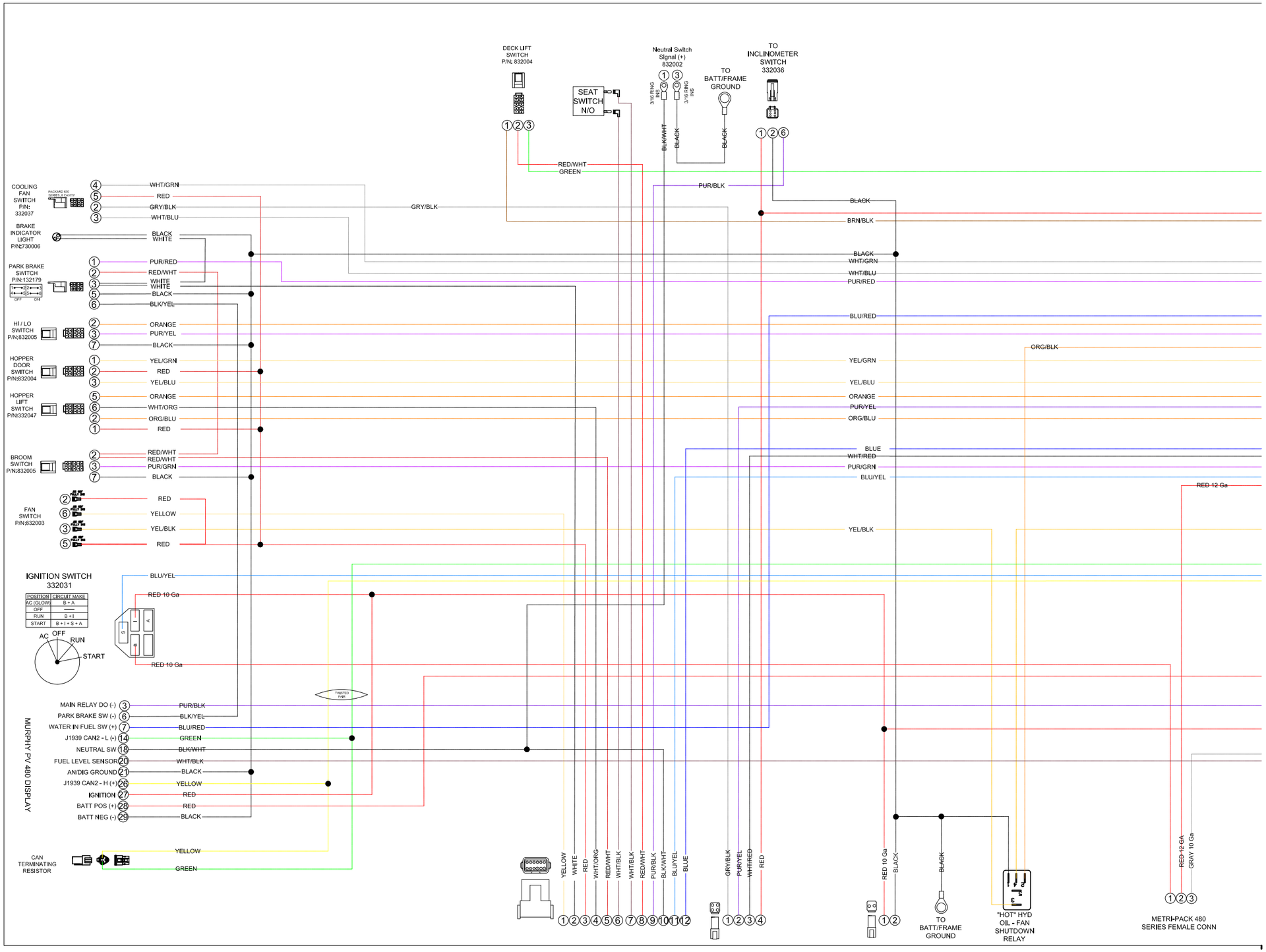
DECK LIFT SWITCH P/N: 832004
SEAT SWITCH N/O
Neutral Switch Signal (+) 832002
3/16 RING INS
TO BATT/FRAME GROUND
TO INCLINOMETER SWITCH 332036
RED/WHT
GREEN
PUR/BLK
BLK/WHT
BLACK
BLACK
BLACK
COOLING FAN SWITCH P/N: 332037
PACKARD 630 SERIES, 6 CAVITY
WHT/GRN
RED
GRY/BLK
WHT/BLU
GRY/BLK
BRAKE INDICATOR LIGHT P/N:730006
BLACK
WHITE
BRN/BLK
PARK BRAKE SWITCH P/N:132179
OFF ON
PUR/RED
RED/WHT
WHITE
WHITE
BLACK
BLK/YEL
BLACK
WHT/GRN
WHT/BLU
PUR/RED
HI / LO SWITCH P/N:832005
ORANGE
PUR/YEL
BLACK
BLU/RED
HOPPER DOOR SWITCH P/N:832004
YEL/GRN
RED
YEL/BLU
ORG/BLK
YEL/GRN
YEL/BLU
HOPPER LIFT SWITCH P/N:332047
ORANGE
WHT/ORG
ORG/BLU
RED
ORANGE
PUR/YEL
ORG/BLU
BROOM SWITCH P/N:832005
RED/WHT
RED/WHT
PUR/GRN
BLACK
BLUE
WHT/RED
PUR/GRN
BLU/YEL
FAN SWITCH P/N:832003
RED
YELLOW
YEL/BLK
RED
RED 12 Ga
YEL/BLK
IGNITION SWITCH 332031
POSITION | CIRCUIT MAKE
AC (GLOW) | B + A
OFF | ——
RUN | B + I
START | B + I + S + A
AC
OFF
RUN
START
BLU/YEL
RED 10 Ga
RED 10 Ga
TWISTED PAIR
MURPHY PV 480 DISPLAY
MAIN RELAY DO (-) 3 PUR/BLK
PARK BRAKE SW (-) 6 BLK/YEL
WATER IN FUEL SW (+) 7 BLU/RED
J1939 CAN2 - L (-) 14 GREEN
NEUTRAL SW 18 BLK/WHT
FUEL LEVEL SENSOR 20 WHT/BLK
AN/DIG GROUND 21 BLACK
J1939 CAN2 - H (+) 26 YELLOW
IGNITION 27 RED
BATT POS (+) 28 RED
BATT NEG (-) 29 BLACK
CAN TERMINATING RESISTOR
YELLOW
GREEN
YELLOW
WHITE
RED
WHT/ORG
RED/WHT
WHT/BLK
WHT/BLK
RED/WHT
PUR/BLK
BLK/WHT
BLU/YEL
BLUE
GRY/BLK
PUR/YEL
WHT/RED
RED
RED 10 Ga
BLACK
BLACK
TO BATT/FRAME GROUND
"HOT" HYD OIL - FAN SHUTDOWN RELAY
RED-12 GA
GRAY 10 Ga
METRI-PACK 480 SERIES FEMALE CONN

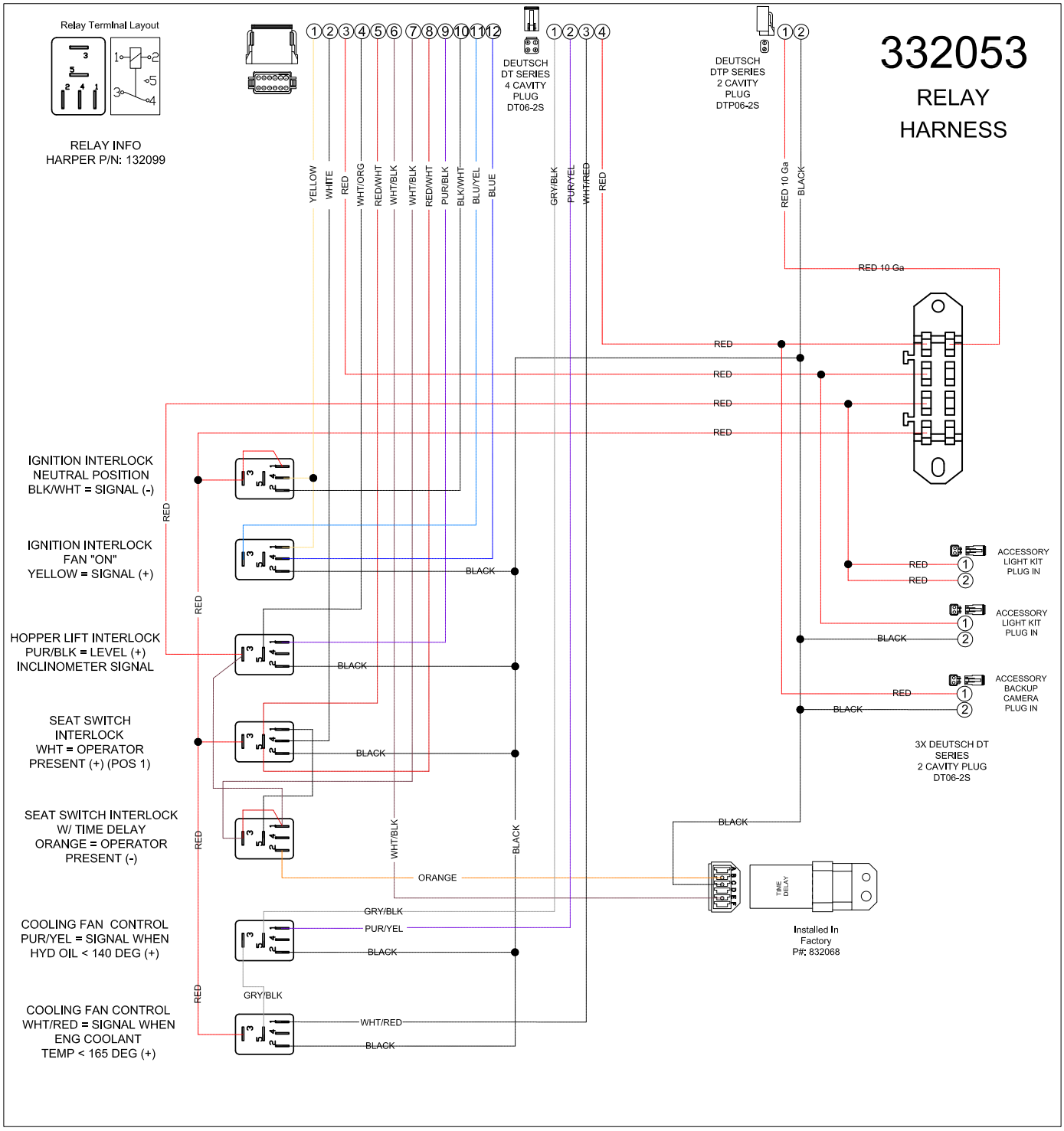
332053
RELAY
HARNESS
Relay Terminal Layout
RELAY INFO
HARPER P/N: 132099
DEUTSCH
DT SERIES
4 CAVITY
PLUG
DT06-2S
DEUTSCH
DTP SERIES
2 CAVITY
PLUG
DTP06-2S
YELLOW
WHITE
RED
WHT/ORG
RED/WHT
WHT/BLK
WHT/BLK
RED/WHT
PUR/BLK
BLK/WHT
BLU/YEL
BLUE
GRY/BLK
PUR/YEL
WHT/RED
RED
RED 10 Ga
BLACK
RED 10 Ga
IGNITION INTERLOCK
NEUTRAL POSITION
BLK/WHT = SIGNAL (-)
IGNITION INTERLOCK
FAN "ON"
YELLOW = SIGNAL (+)
HOPPER LIFT INTERLOCK
PUR/BLK = LEVEL (+)
INCLINOMETER SIGNAL
SEAT SWITCH
INTERLOCK
WHT = OPERATOR
PRESENT (+) (POS 1)
SEAT SWITCH INTERLOCK
W/ TIME DELAY
ORANGE = OPERATOR
PRESENT (-)
COOLING FAN CONTROL
PUR/YEL = SIGNAL WHEN
HYD OIL < 140 DEG (+)
COOLING FAN CONTROL
WHT/RED = SIGNAL WHEN
ENG COOLANT
TEMP < 165 DEG (+)
ACCESSORY
LIGHT KIT
PLUG IN
ACCESSORY
LIGHT KIT
PLUG IN
ACCESSORY
BACKUP
CAMERA
PLUG IN
3X DEUTSCH DT
SERIES
2 CAVITY PLUG
DT06-2S
TIME
DELAY
Installed In
Factory
P#: 832068
ORANGE
GRY/BLK
PUR/YEL
WHT/RED

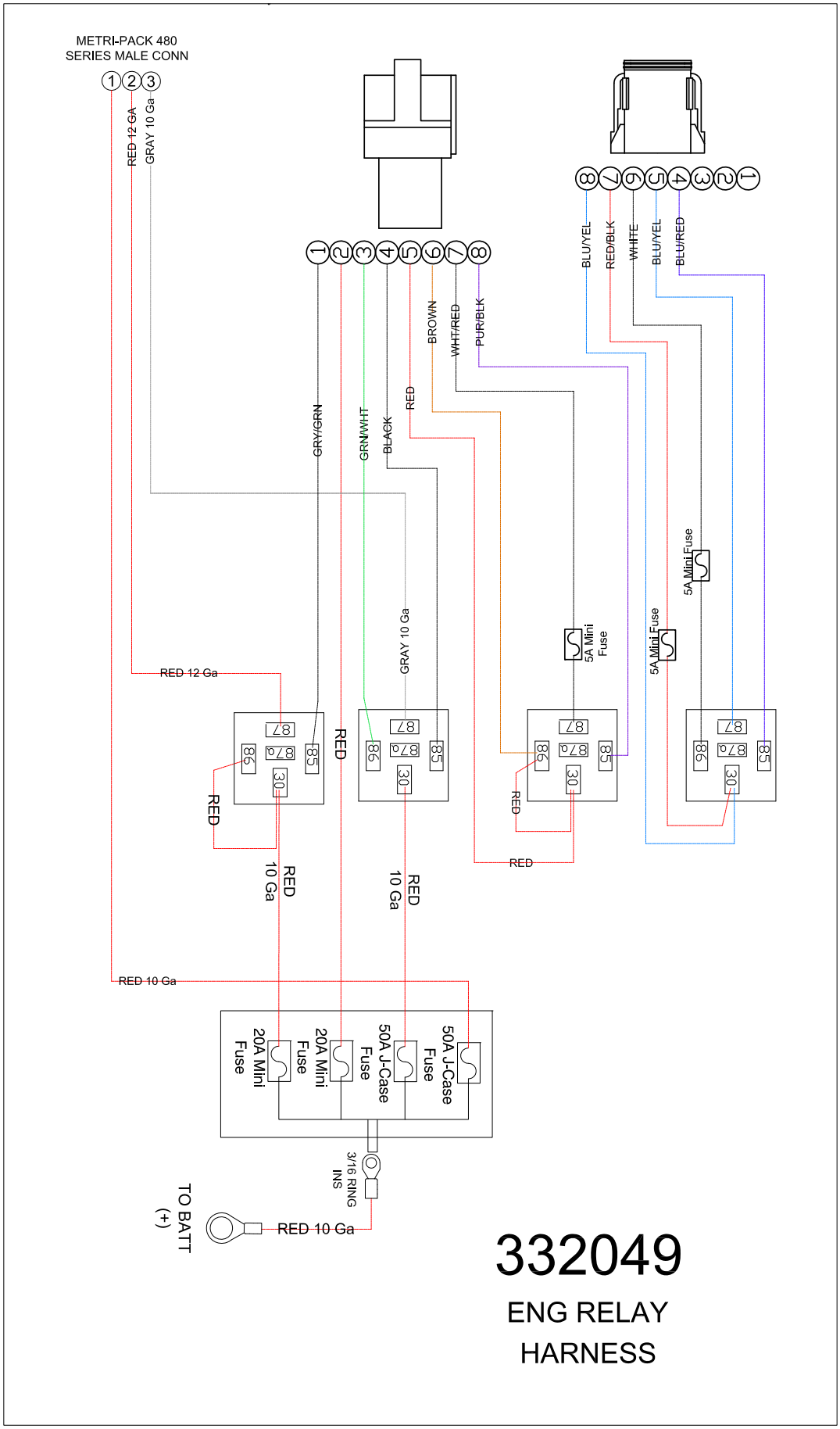
METRI-PACK 480
SERIES MALE CONN
1 2 3
RED 12 GA
GRAY 10 Ga
1 2 3 4 5 6 7 8
GRY/GRN
GRN/WHT
BLACK
RED
BROWN
WHT/RED
PUR/BLK
8 7 6 5 4 3 2 1
BLU/YEL
RED/BLK
WHITE
BLU/YEL
BLU/RED
5A Mini Fuse
5A Mini Fuse
5A Mini Fuse
GRAY 10 Ga
RED 12 Ga
87
86
87a
30
85
RED
RED
RED
RED
RED
RED
10 Ga
RED
10 Ga
RED 10 Ga
20A Mini Fuse
20A Mini Fuse
50A J-Case Fuse
50A J-Case Fuse
3/16 RING INS
TO BATT (+)
RED 10 Ga
332049
ENG RELAY
HARNESS

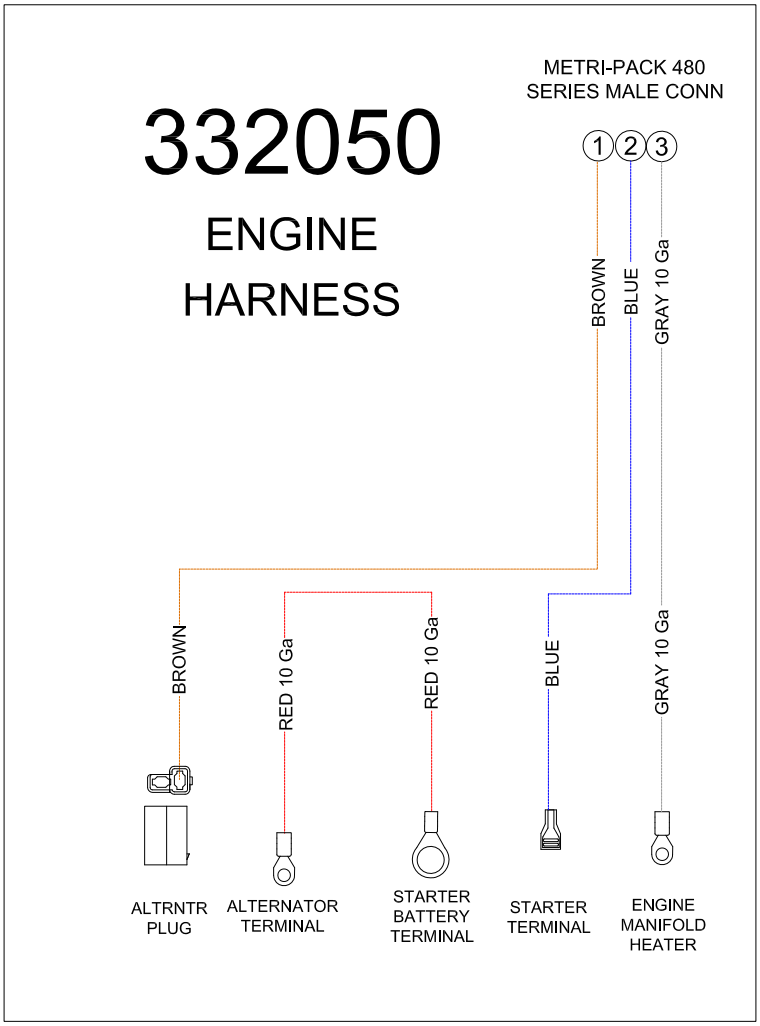
METRI-PACK 480
SERIES MALE CONN
332050
ENGINE
HARNESS
1
2
3
BROWN
BLUE
GRAY 10 Ga
BROWN
RED 10 Ga
RED 10 Ga
BLUE
GRAY 10 Ga
ALTRNTR
PLUG
ALTERNATOR
TERMINAL
STARTER
BATTERY
TERMINAL
STARTER
TERMINAL
ENGINE
MANIFOLD
HEATER

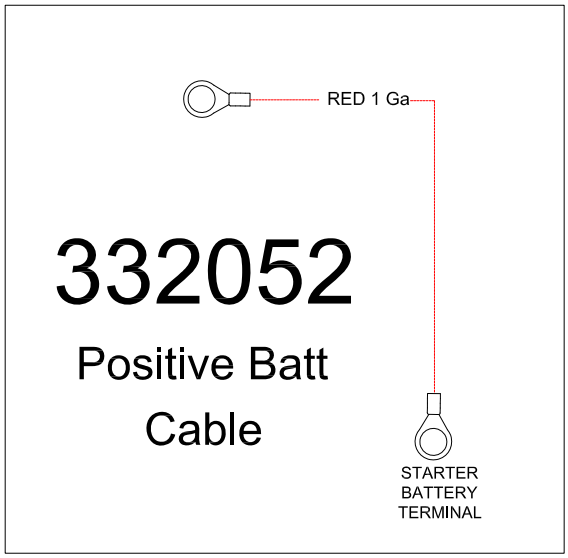
RED 1 Ga
332052
Positive Batt
Cable
STARTER
BATTERY
TERMINAL

Hydraulic Valves Electrical Assembly

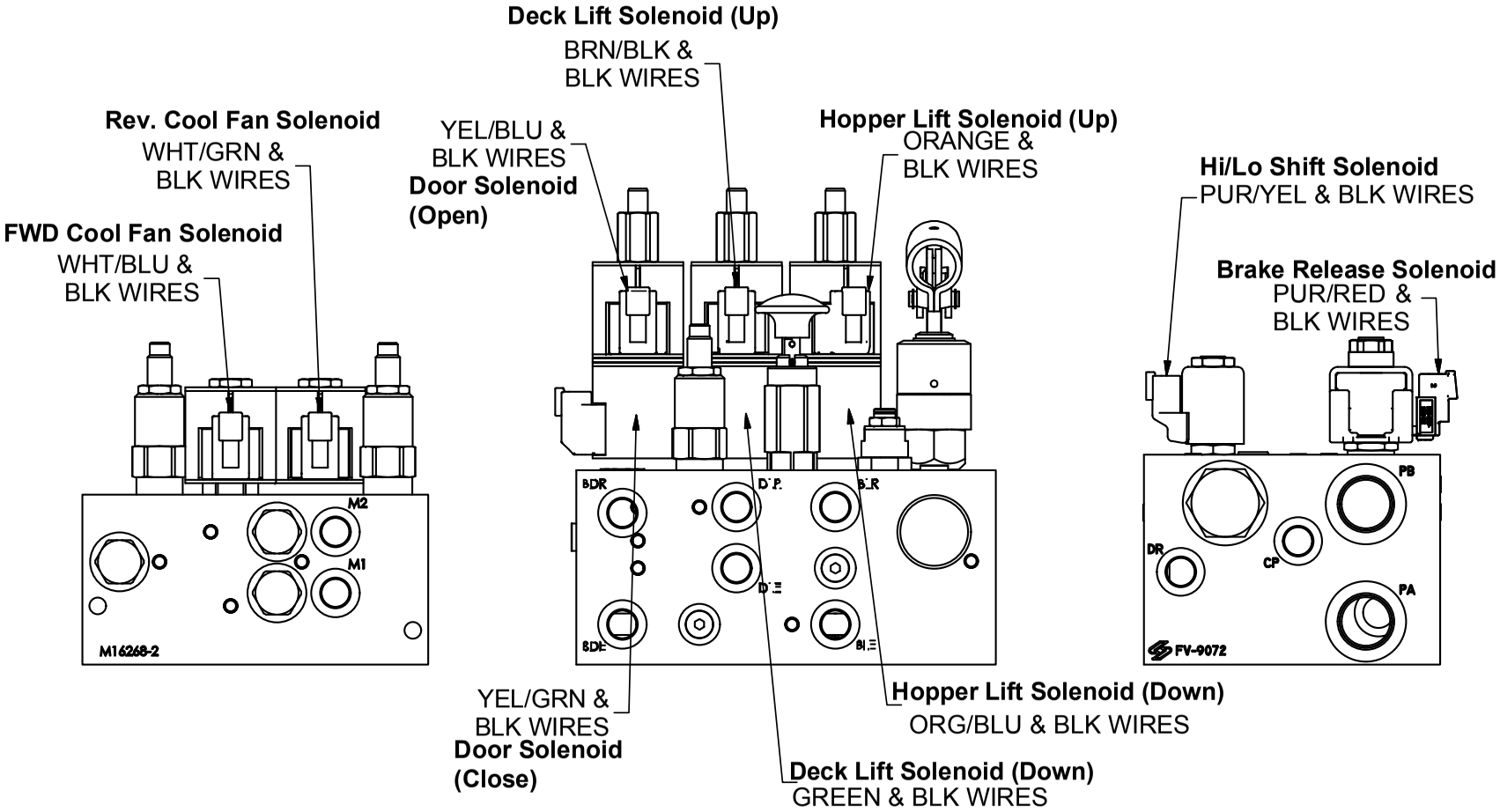

Cooling Fan Valve

Cylinder Control Valve

Propulsion Valve

11/5/2019

TEMPERATURE SWITCH ELECTRICAL ASSEMBLY

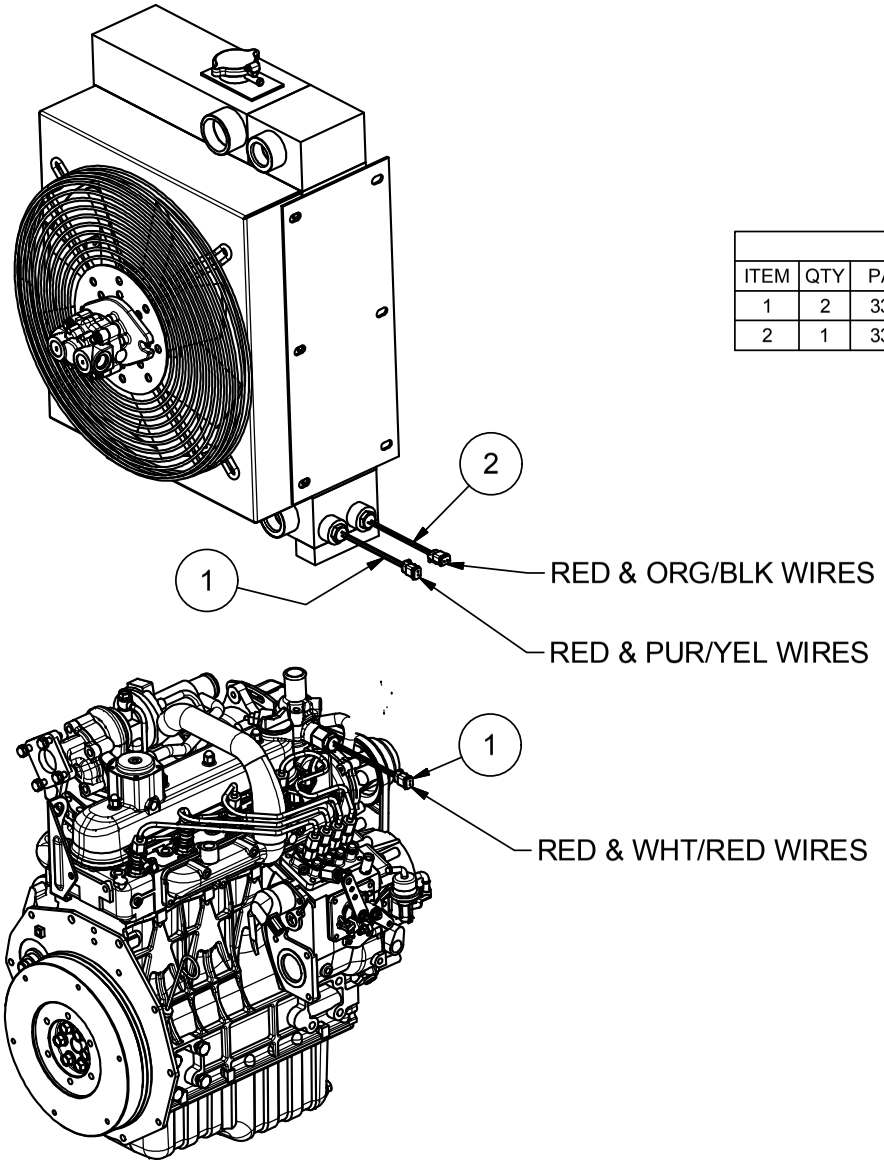

Parts List			
ITEM	QTY	PART #	DESCRIPTION
1	2	332038	Switch, 140 F Temp, 8MB, N.C. Rising
2	1	332041	Switch, 190 F Temp, 8MB, N.O. Rising

10/3/2017

Kit, Brush Rotor

Customer Install P/N: 300064
Factory Install P/N: 300065

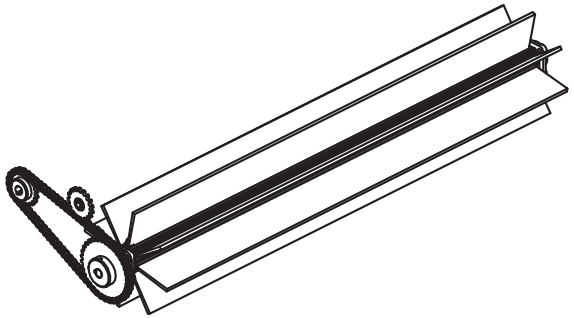

PARTS LIST			
ITEM	QTY	PART #	DESCRIPTION
	8	110402	Bolt, 3/8-16 X 1.25 in Carriage
	8	110672	WASHER, 3/8" LOCK
	8	110826	NUT, 3/8-16 GR 5
	1	302003	BRUSH, 60 in
	1	311369	SHAFT, BRUSH DECK
	1	342007	SPROCKET - IDLER, 5017
	1	342016	SPROCKET - 50B19 X 1
	1	342017	SPROCKET - 50B35 X 1
	1	342043	CHAIN, #50 - 68 PIN W/ CONNECTOR (43.625")
10	2	510089	KEY, 1/4 X 1/4 X 1.25 in
11	2	942093	BEARING - 1", 4 BLT FLNG
12	3	973002	FLANGE, 2 1/8 X 1, TJ-16

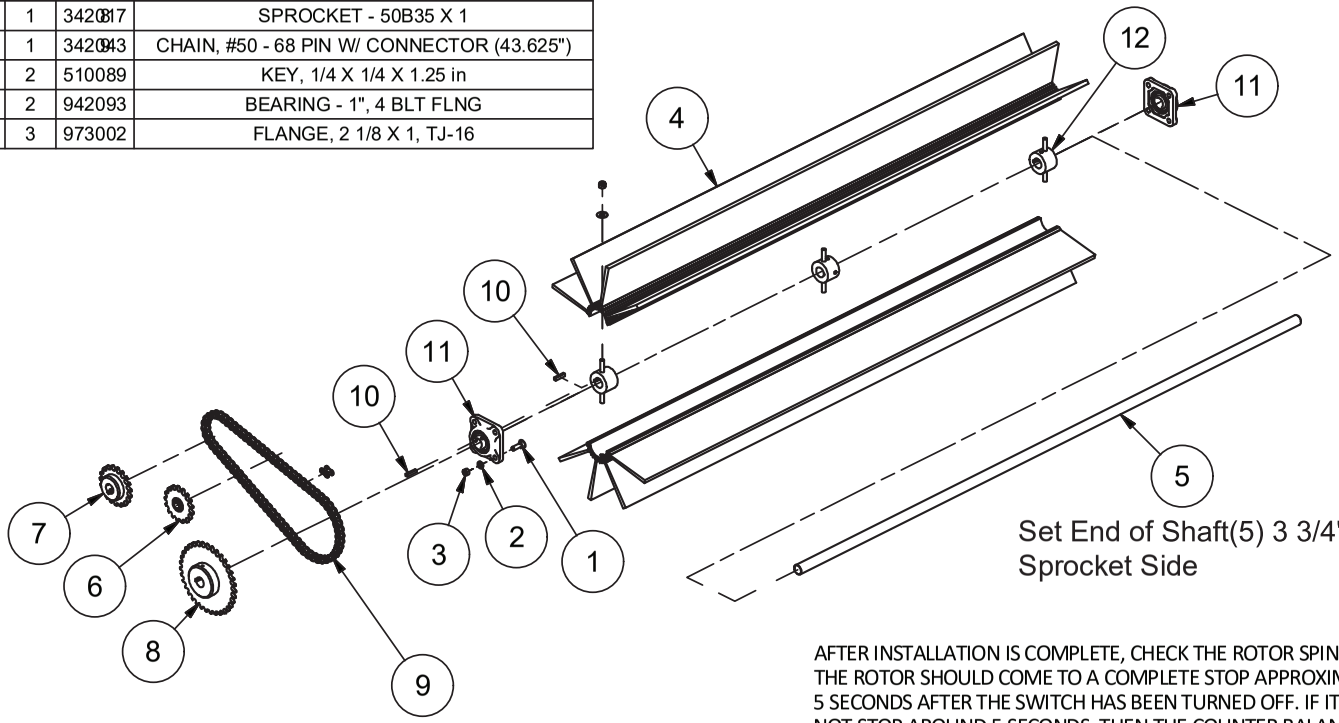

Set End of Shaft(5) 3 3/4" From Flange on Sprocket Side

342043 - Service Parts	
PART #	DESCRIPTION
142006	ROLLER CHAIN, #50 - 68 PIN (43.625")
140011	CONNECTING LINK, #50 CHAIN

AFTER INSTALLATION IS COMPLETE, CHECK THE ROTOR SPINDOWN. THE ROTOR SHOULD COME TO A COMPLETE STOP APPROXIMATELY 5 SECONDS AFTER THE SWITCH HAS BEEN TURNED OFF. IF IT DOES NOT STOP AROUND 5 SECONDS, THEN THE COUNTER BALANCE VALVE MUST BE ADJUSTED. THE ADJUSTMENT PROCEDURE IS LISTED IN THE HYDRAULIC SECTION ON THE "FAN & DECK VALVE" PAGE.

302003 has been replaced by 302170 & 411481.
See following page for replacement information.

11/5/2019

HARPER TURF EQUIPMENT

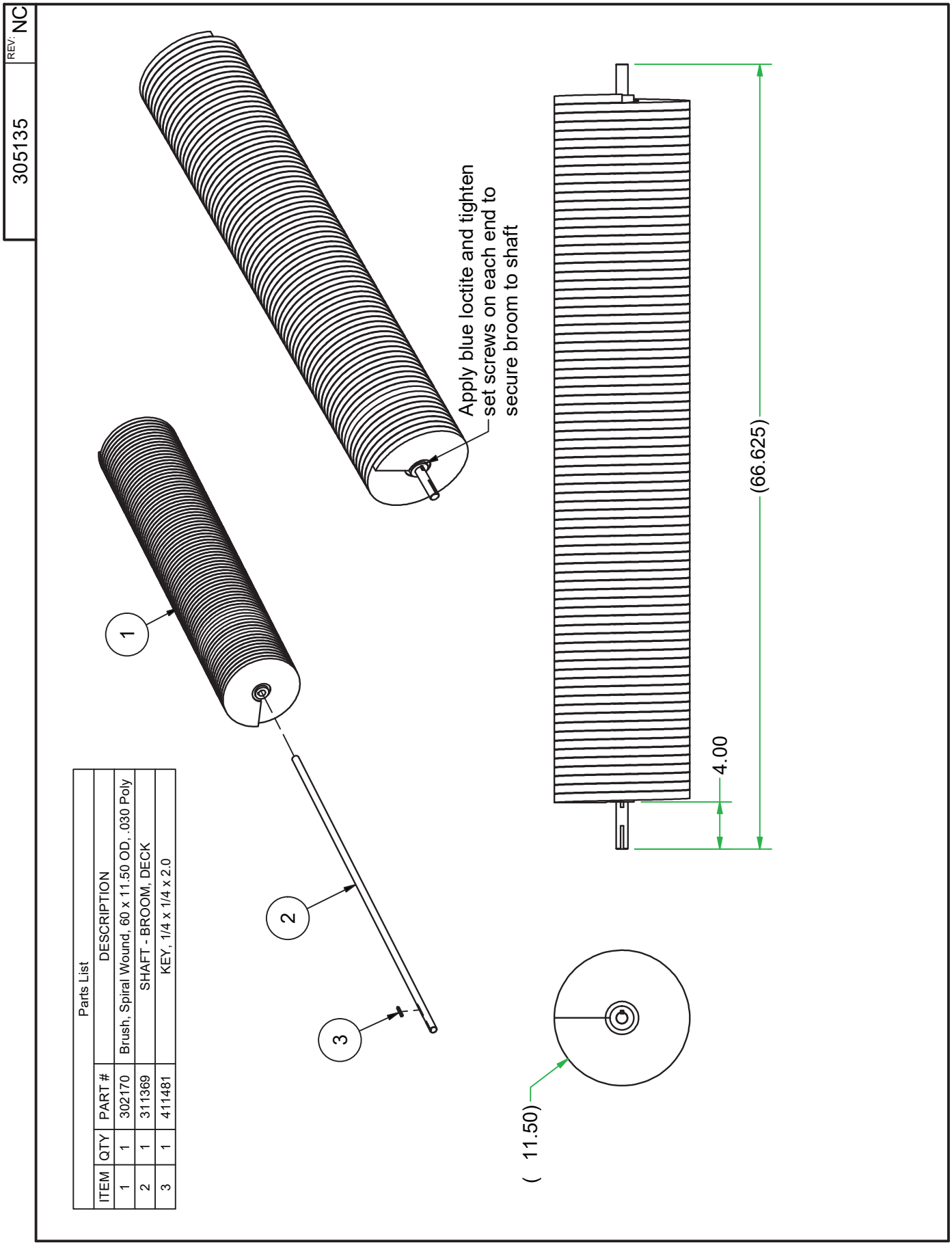

Parts List

ITEM	QTY	PART #	DESCRIPTION
1	1	302170	Brush, Spiral Wound, 60 x 11.50 OD, .030 Poly
2	1	311369	SHAFT - BROOM, DECK
3	1	411481	KEY, 1/4 x 1/4 x 2.0

Kit, Rubber Finger Rotor

Customer Install P/N: 300066
Factory Install P/N: 300067

Parts List			
ITEM	QTY	PART #	DESCRIPTION
1	8	110402	Bolt, 3/8-16 X 1.25 in Carriage
2	40	110603	NUT, 5/16-18 LOCK (NYLON)
3	8	110672	WASHER, 3/8" LOCK
4	8	110826	NUT, 3/8-16 GR 5
5	80	302042	FINGER - RUBBER
6	20	311403	CLAMP - RUBBER FINGER
7	1	315179	SHAFT - FINGER ROTOR, WELDMENT
8	1	342007	SPROCKET - IDLER, 5017
9	1	342026	SPROCKET - 50B27 X 1
10	1	342030	SPROCKET - 50B24 X 1
11	1	342043	CHAIN, #50 - 68 PIN W/ CONNECTOR (43.625")
12	1	510089	1/4" KEYSTOCK
13	2	942093	BEARING - 1", 4 BLT FLNG

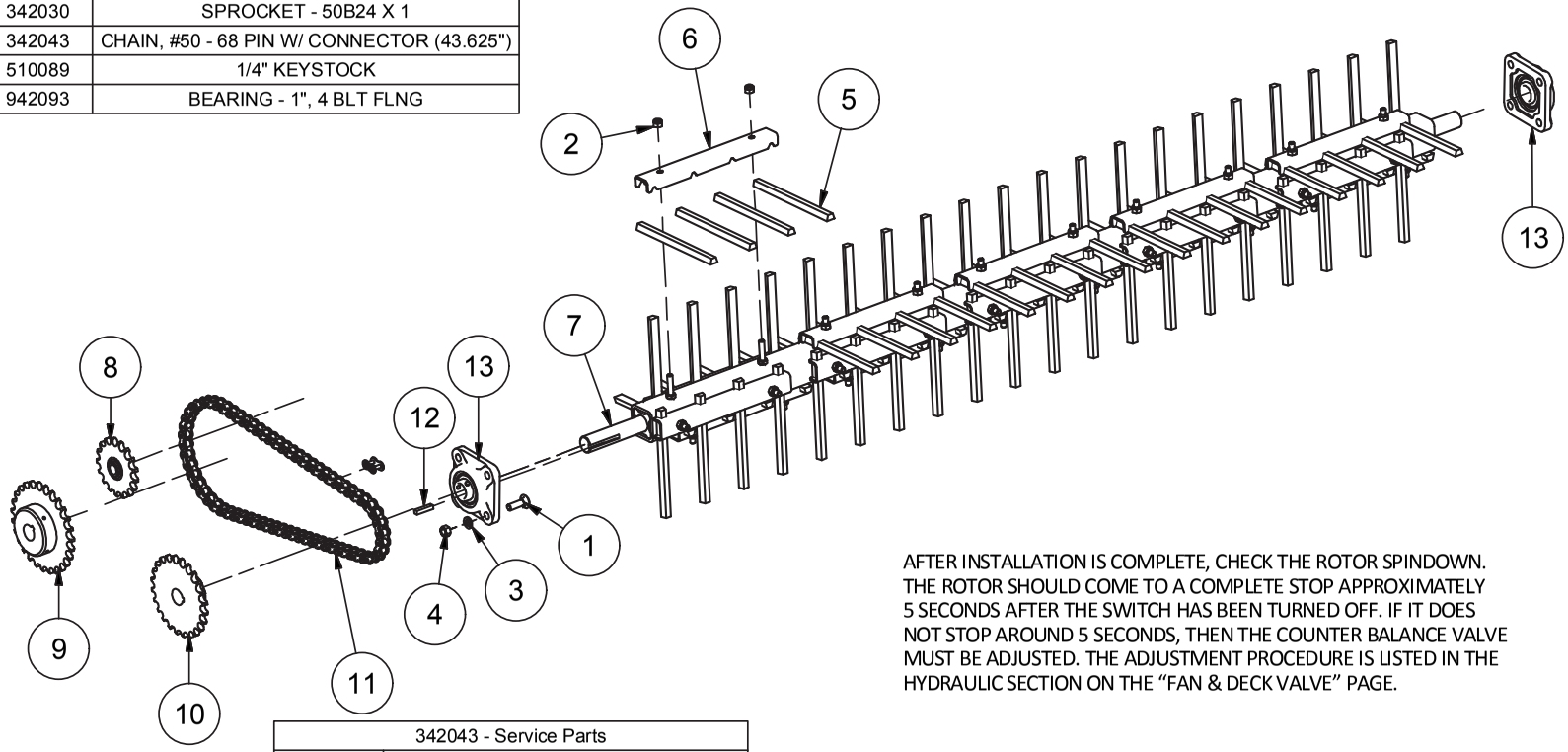

AFTER INSTALLATION IS COMPLETE, CHECK THE ROTOR SPINDOWN. THE ROTOR SHOULD COME TO A COMPLETE STOP APPROXIMATELY 5 SECONDS AFTER THE SWITCH HAS BEEN TURNED OFF. IF IT DOES NOT STOP AROUND 5 SECONDS, THEN THE COUNTER BALANCE VALVE MUST BE ADJUSTED. THE ADJUSTMENT PROCEDURE IS LISTED IN THE HYDRAULIC SECTION ON THE "FAN & DECK VALVE" PAGE.

342043 - Service Parts	
PART #	DESCRIPTION
142006	ROLLER CHAIN, #50 - 68 PIN (43.625")
140011	CONNECTING LINK, #50 CHAIN

3/28/2017

Kit, Verticut W/ Fingers Rotor

Customer Install P/N: 300068
Factory Install P/N: 300069

Parts List			
ITEM	QTY	PART #	DESCRIPTION
1	1	100567	KEY, 3/8 X 3/8 X 1.75 in
2	8	110042	Bolt, 1/2-13 X 1.75 in Carriage
3	2	110107	NUT, 3/8-16 HEX JAM GR 2
4	2	110325	SetScrew, 3/8-16 X 0.75
5	1	110332	COLLAR - 1-1/2" SPLIT
6	58	110603	NUT, 5/16-18 LOCK (NYLON)
7	8	110610	NUT, 1/2-13
8	8	110666	WASHER, 1/2" LOCK
9	29	110824	BOLT, U-, 5/16-18 X 2-1/2 X 3-3/16
10	1	311400	SHAFT - VERTICUTTER, TV30
11	2	311607	SPACER, VERTICUTTER BEARING
12	29	311608	FINGER, 12" RUBBER
13	29	311609	HOLDER, FINGER
14	2	342044	SPROCKET - 60BTB30 2012
15	1	342045	BUSHING, TAPER LOCK - 1.5" - 2012
16	1	342047	BUSHING, TAPER LOCK - 1" - 2012
17	1	342055	ROLLER CHAIN, #60 VERTICUT ROTOR
18	2	410851	BEARING, 4FNG 1 1/2"
19	1	942102	SPROCKET - IDLER, 6011
20	1	970475	NUT - HEX, JAM, 1-3/4 - 5 UNC
21	29	970803	SPACER - VERTI CUTTER, 2 IN
22	30	970804	DISC - DETHATCH, 10 Ga, 11 POINT
23	1	970805	WASHER - CUP, ROTOR

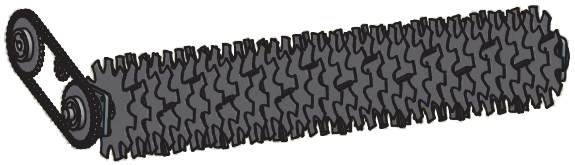

NOTE: FINGERS ROTATED 90°
BETWEEN EACH SPACING

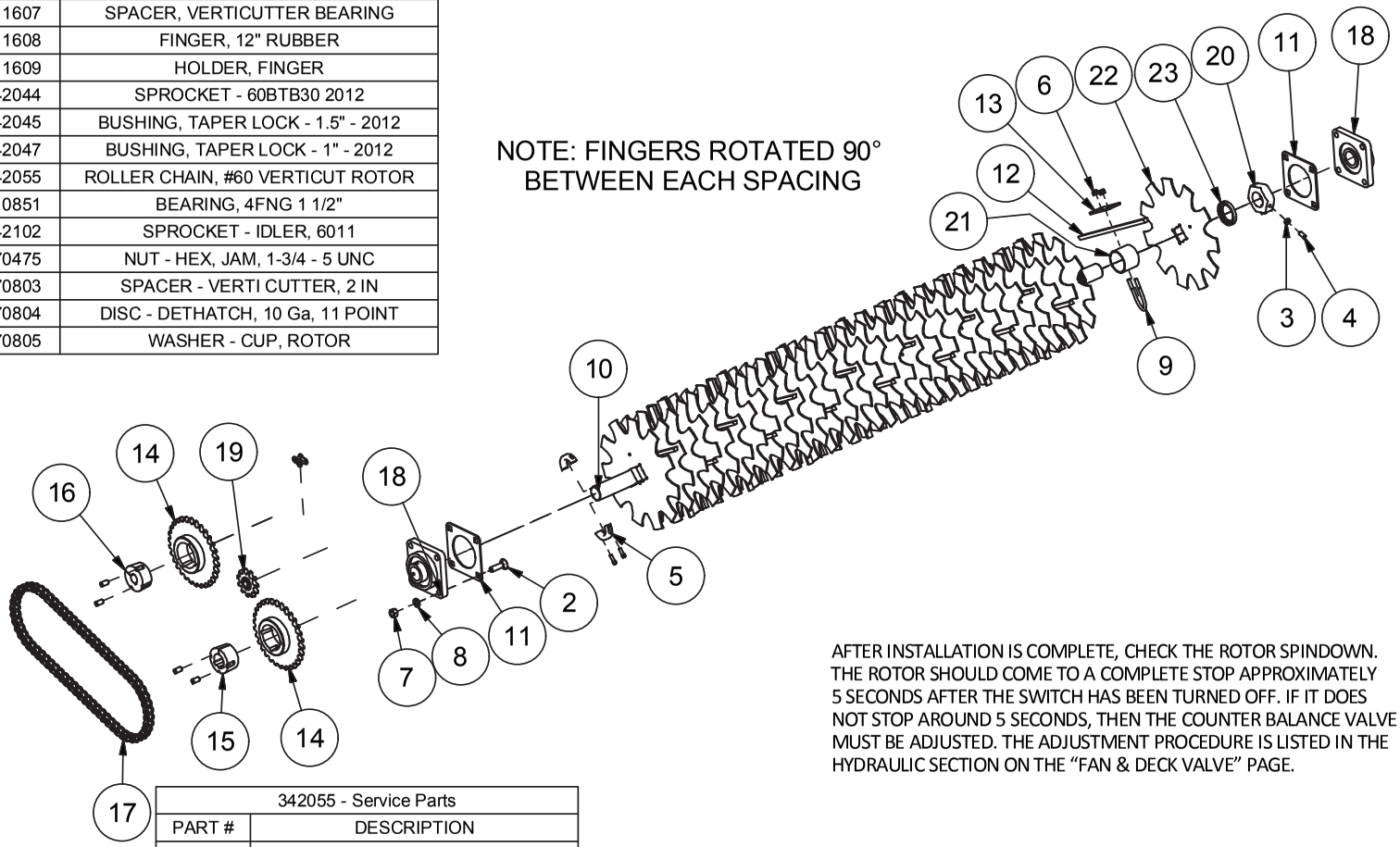

342055 - Service Parts	
PART #	DESCRIPTION
140002	ROLLER CHAIN - #60, 68 PIN (52.50")
410442	CONNECTING LINK, #60 CHAIN

AFTER INSTALLATION IS COMPLETE, CHECK THE ROTOR SPINDOWN. THE ROTOR SHOULD COME TO A COMPLETE STOP APPROXIMATELY 5 SECONDS AFTER THE SWITCH HAS BEEN TURNED OFF. IF IT DOES NOT STOP AROUND 5 SECONDS, THEN THE COUNTER BALANCE VALVE MUST BE ADJUSTED. THE ADJUSTMENT PROCEDURE IS LISTED IN THE HYDRAULIC SECTION ON THE "FAN & DECK VALVE" PAGE.

3/28/2017

CANOPY OPTION

HARPER PRT NO. 300056 - FACTORY INSTALL
HARPER PRT NO. 300057 - CUSTOMER INSTALL

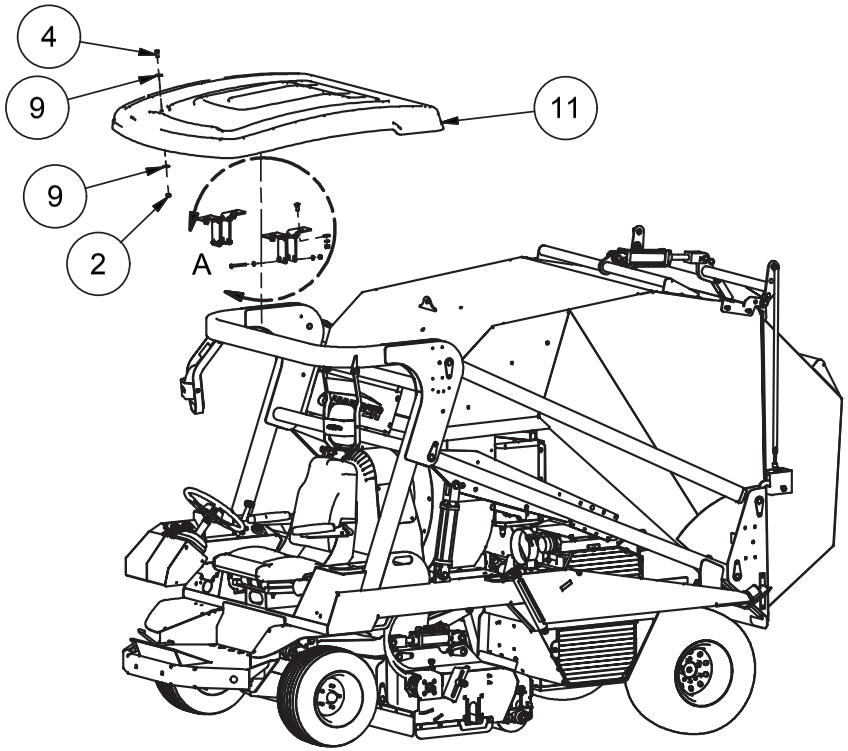

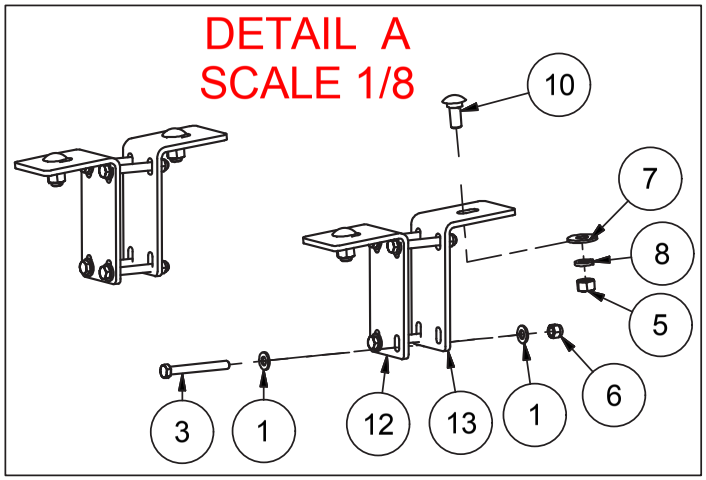

Parts List			
ITEM	QTY	PART #	DESCRIPTION
1	16	110155	WASHER, 3/8" FLAT SAE
2	8	110219	NUT, 7/16-14 LOCK NYLON INSERT
3	8	110494	BOLT, 3/8-16 X 3.25
4	8	110528	BOLT, 7/16-14 X 1.0
5	4	110610	NUT, 1/2-13
6	8	110618	NUT, 3/8-16 LOCK NYLON INSERT
7	4	110658	WASHER, 1/2" FLAT STANDARD
8	4	110666	WASHER, 1/2" LOCK
9	16	110670	WASHER, 7/16" FLAT STANDARD
10	4	112070	Bolt, 1/2-13 X 1.25 in Carriage
11	1	302067	CANOPY W/ BRACKETS, TV30
12	2	311658	BRACKET, FRONT CANOPY MOUNTING
13	2	311659	BRACKET, REAR CANOPY MOUNTING

INSTALLATION INSTRUCTIONS

1. SPLIT THE DOUBLE SEAL. APPLY ONE SEAL TO THE UPPER EDGE & APPLY THE OTHER TO THE UPPER BEND. SEE DIAGRAM FOR LOCATION.
2. REMOVE PLASTIC BUMPERS ON EACH SIDE OF THE HOPPER (2015 & NEWER MACHINES DO NOT HAVE THESE)
3. ALIGN THE SLOTS ON THE HOPPER EXTENSION (311654) WITH THE HOLES THAT THE BUMPERS WERE MOUNTED TO.
4. THEN RE-INSTALL THE BOLTS AND BUMPERS TO THE OUTSIDE OF THE EXTENSION. FOR NEWER MACHINES, USE THE 1/4" WIZ BOLTS & WIZ NUTS.
5. SLIDE THE EXTENSION UP UNTIL IT TOUCHES THE BOTTOM SIDE OF THE HOPPER AND THEN TIGHTEN THE BOLTS.
6. NEXT DRILL A 3/8" HOLE INTO THE HOPPER TO ATTACH THE 3/8" BOLT (110437) AND NUT (110645) ON EACH SIDE.

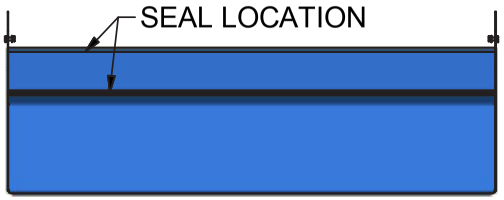

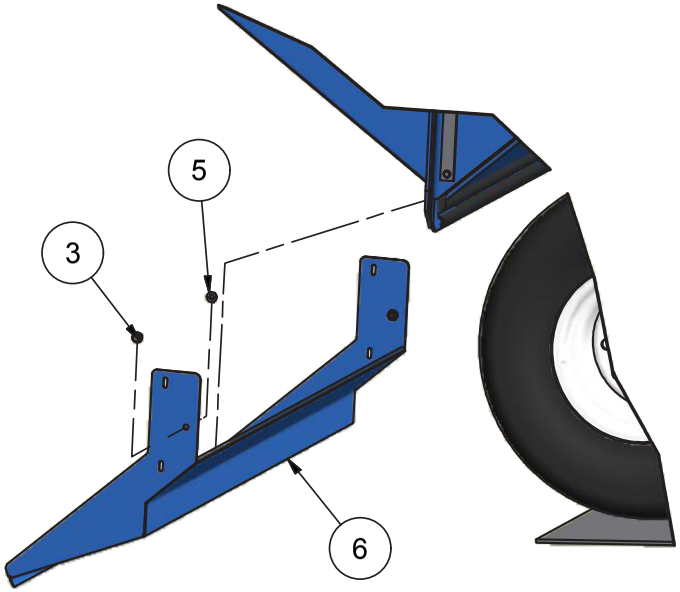

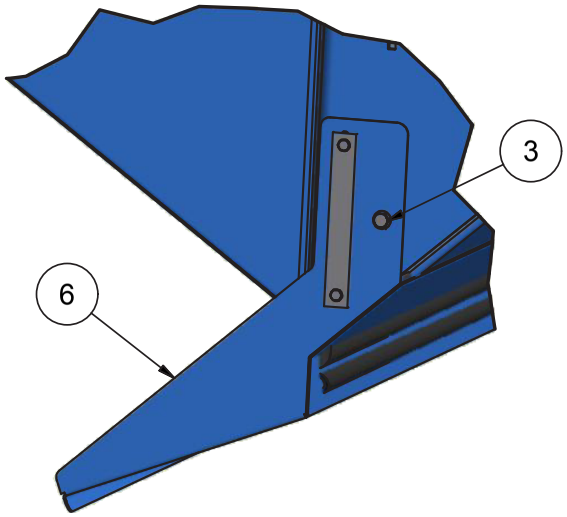

Parts List			
ITEM	QTY	PART #	DESCRIPTION
1	57.5"	102055	SEAL, RUBBER .5 x .3 DOUBLE
2	4	110290	NUT, 1/4-20 WIZ FLANGE
3	2	110437	BOLT, 3/8-16 X 0.75, WIZ FLANGE
4	4	110468	BOLT, 1/4-20 X 0.75, WIZ FLANGE
5	2	110645	NUT, 3/8-16 WIZ FLANGE
6	1	311654	EXTENSION, HOPPER DUMP

Kit, Hopper Dump Extension

Customer Install P/N: 300054
Factory Install P/N: 300053

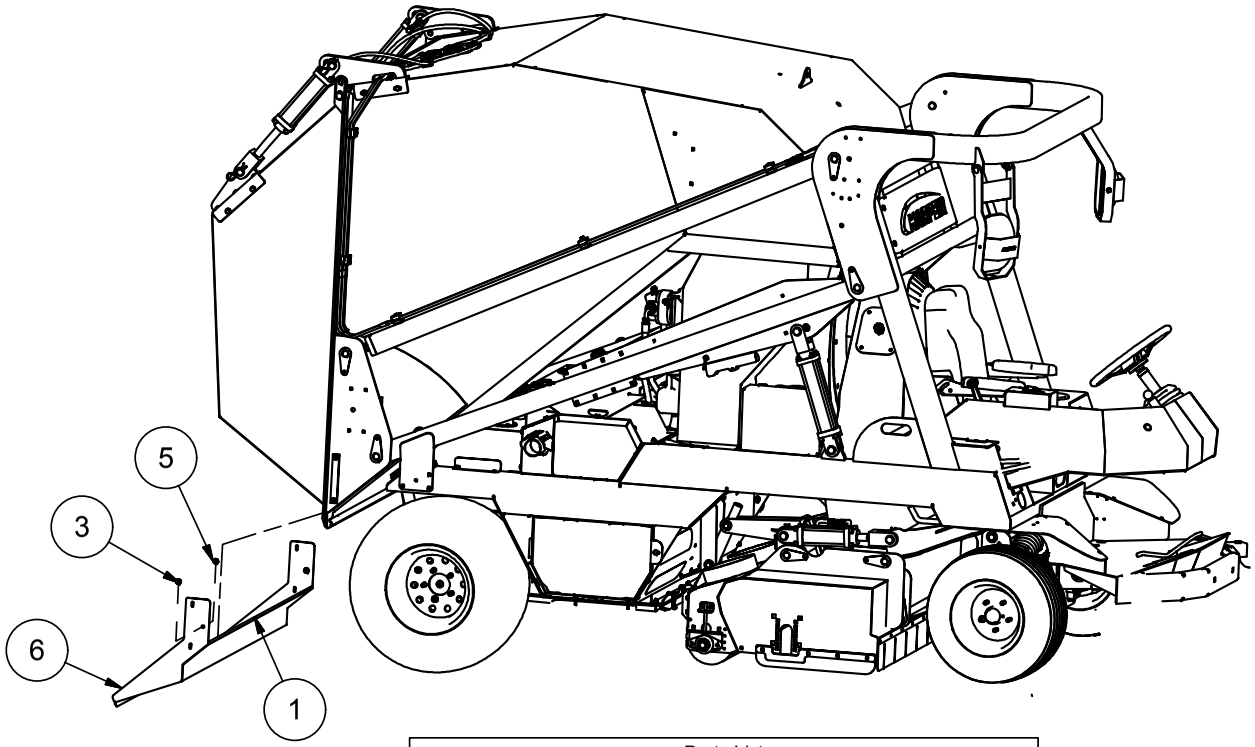

Parts List			
ITEM	QTY	PART #	DESCRIPTION
1	57.5"	102055	SEAL, RUBBER .5 x .3 DOUBLE
2	4	110290	NUT, 1/4-20 WIZ FLANGE
3	2	110437	BOLT, 3/8-16 X 0.75, WIZ FLANGE
4	4	110468	BOLT, 1/4-20 X 0.75, WIZ FLANGE
5	2	110645	NUT, 3/8-16 WIZ FLANGE
6	1	311654	EXTENSION, HOPPER DUMP

2/29/2016

REMOTE HOSE OPTION

HARPER PRT NO. 300048 - FACTORY INSTALL
HARPER PRT NO. 300049 - CUSTOMER INSTALL

Parts List			
ITEM	QTY	PART #	DESCRIPTION
1	2.5'	102055	SEAL, RUBBER .5 x .3 Double
2	1	110311	CLAMP, HOSE #912 8.00"
3	4	110404	BOLT, 3/8-16 X 1.75
4	6	110464	BOLT, 1/4-20 X 1.0
5	2	110561	BOLT, 1/4-20 X .75
6	2	110603	NUT, 5/16-18 LOCK (NYLON)
7	4	110618	NUT, 3/8-16 LOCK NYLON INSERT
8	2	110630	NUT, 1/4-20 LOCK (NYLON INSERT)
9	4	110658	WASHER, 1/2" FLAT STANDARD
10	6	110667	WASHER, 1/4" LOCK
11	2	112057	U-BOLT, 1/4-20 X .75
12	1	132098	QUICK SPLICER, 18-14 GA
13	2	310029	HANDLE GRIP, RUBBER
14	1	311208	SHAFT - CONTROL, FUNNEL DOOR
15	2	311626	BRACKET, SPRING
16	1	311631	GUIDE, DOOR
17	1	311632	DOOR, SLIDING
18	1	312010	SHOCK, GAS 8.27"-12.2"
19	1	312011	CLAMP, 8" ADJUSTABLE HOSE
20	2	312012	ROLLER, 3"
21	12.5'	312013	HOSE, 8" REMOTE
22	1	315234	WELDMENT, FUNNEL DOOR
23	1	315235	LEVER, FUNNEL DOOR
24	1	315236	WELDMENT, REMOTE HOSE SUPPORT
25	1	315237	WELDMENT, REMOTE HOSE FUNNEL
26	1	315238	ADAPTER, REMOTE HOSE 8"
27	1	315239	WELDMENT, NOZZLE HANDLE
28	1	315240	WELDMENT, ADJUSTABLE HANDLE
29	4	510112	COTTER PIN, 3/16 X 1
30	2	710586	SCREW, 1/4 X 1 TEK SELF-TAP
31	1	910044	COVER, VINYL .25 X 1.5 X 4 GRIP
32	4	972018	SPRING, COMPRESSION

2/20/2013

REMOTE HOSE OPTION

HARPER PRT NO. 300048 - FACTORY INSTALL
HARPER PRT NO. 300049 - CUSTOMER INSTALL

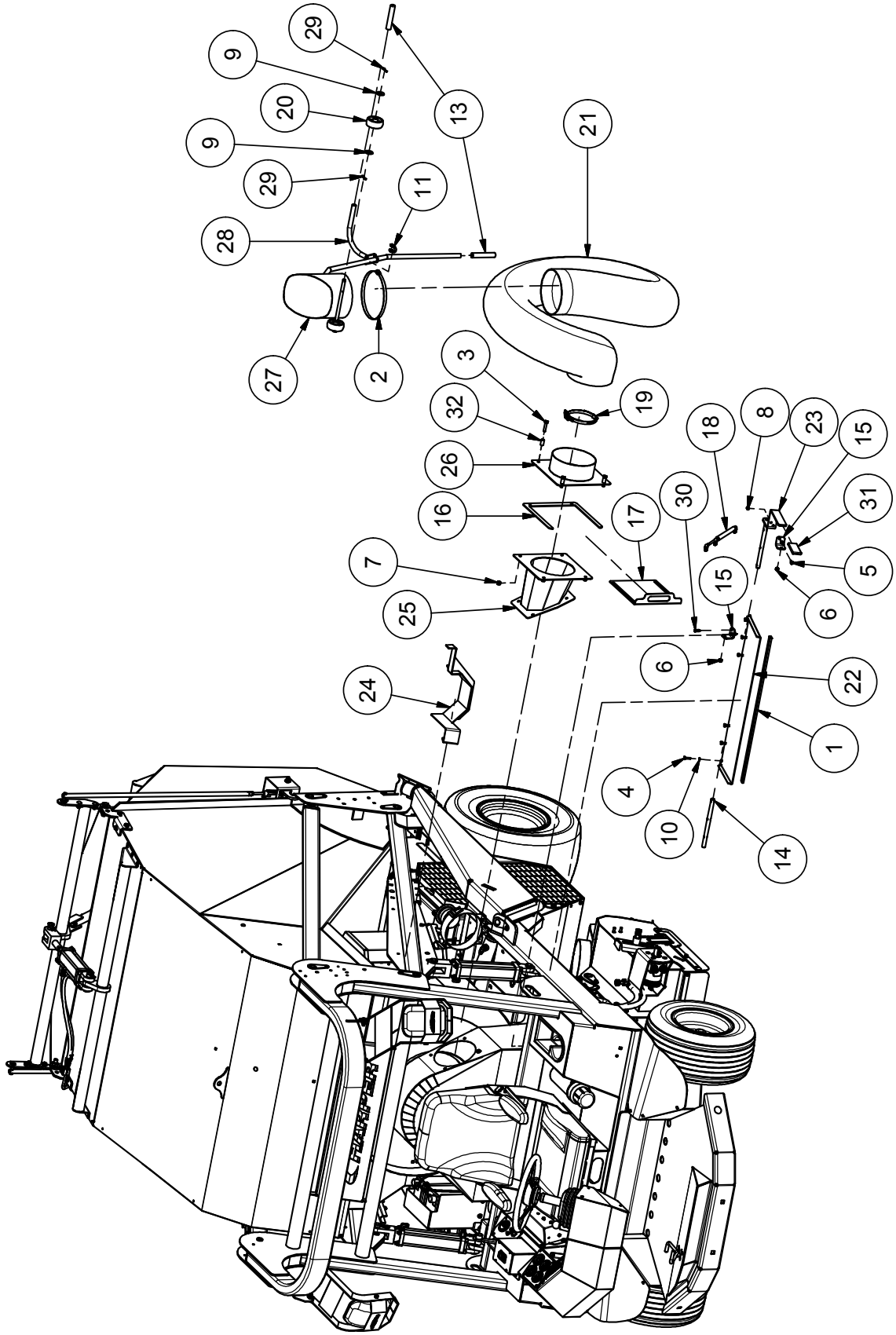

2/20/2013

Kit, Curb Brush

Customer Install P/N: 300070
Factory Install P/N: 300071

Parts List			
ITEM	QTY	PART #	DESCRIPTION
1	5	100578	CABLE TIE 14" BLACK 50 Lb Tens
2	1	102022	GRIP, VINLY 5/8"ID x 4.75"
3	2	110020	Bolt, 5/16-18 X 0.75 in Carriage
4	3	110378	BOLT, 5/16-18 X 2.0
5	2	110392	Bolt, 3/8-16 X 2 in Carriage
6	4	110400	BOLT, 3/8-16 X 2.0
7	4	110420	BOLT, 3/8-16 X 1.0
8	1	110444	BOLT, 5/16-18 X 0.75, WIZ FLANGE
9	1	110464	BOLT, 1/4-20 X 1.0
10	2	110553	BOLT, 1/2-13 X 2.5 TAP
11	2	110603	NUT, 5/16-18 LOCK (NYLON)
12	4	110606	NUT, 5/16-18 WIZ FLANGE
13	2	110642	NUT, 1/2-13 HEX JAM GR 2
14	2	110665	WASHER, 5/16" FLAT STANDARD
15	1	110667	WASHER, 1/4" LOCK
16	10	110672	WASHER, 3/8" LOCK
17	10	110676	WASHER, 3/8" FLAT STANDARD
18	4	110826	NUT, 3/8-16 GR 2
19	2	120251	ADAPTER, 10MJ-10MB
20	2	120277	ADAPTER, 8MJ-8MB
21	1	120288	ADAPTER, 8MJ-8MB90
22	1	120427	ADAPTER, 8MJ-8FJX-8MJ
23	2	302063	KNOB, ALUMINUM 3/8-16
24	1	302064	BRUSH, 24" x 6" x 40 DEG
25	1	311640	BRACKET, LATCH
26	1	311647	MOUNT, CURB BRUSH MOTOR
27	1	311648	LATCH, HANDLE
28	1	312015	PIN, 5/8" x 3.5"
29	1	315241	MOUNT, CURB BRUSH PIVOT
30	1	315242	MOUNT, CURB BRUSH FRAME
31	1	315243	MOUNT, CURB BRUSH TILT
32	1	315244	WELDMENT, CURB BRUSH HANDLE
33	2	320272	HOSE, VALVE TO CURB BRUSH
34	1	320273	HOSE, CURB BRUSH SUPPLY
35	1	320337	HOSE ASSY, CURB BRUSH RETURN
36	1	322064	MOTOR, EATON 101-1016-009 (22.1 CI)

Parts List			
ITEM	QTY	PART #	DESCRIPTION
37	1	323035	VALVE, CIRCUIT SELECTOR
38	2	500156	PIN, 1/8 x 2.375 COTTER
39	1	970763	WASHER, 1.50 X .320
40	1	975128	BRUSH ADAPTOR WELDMENT

3/7/2016

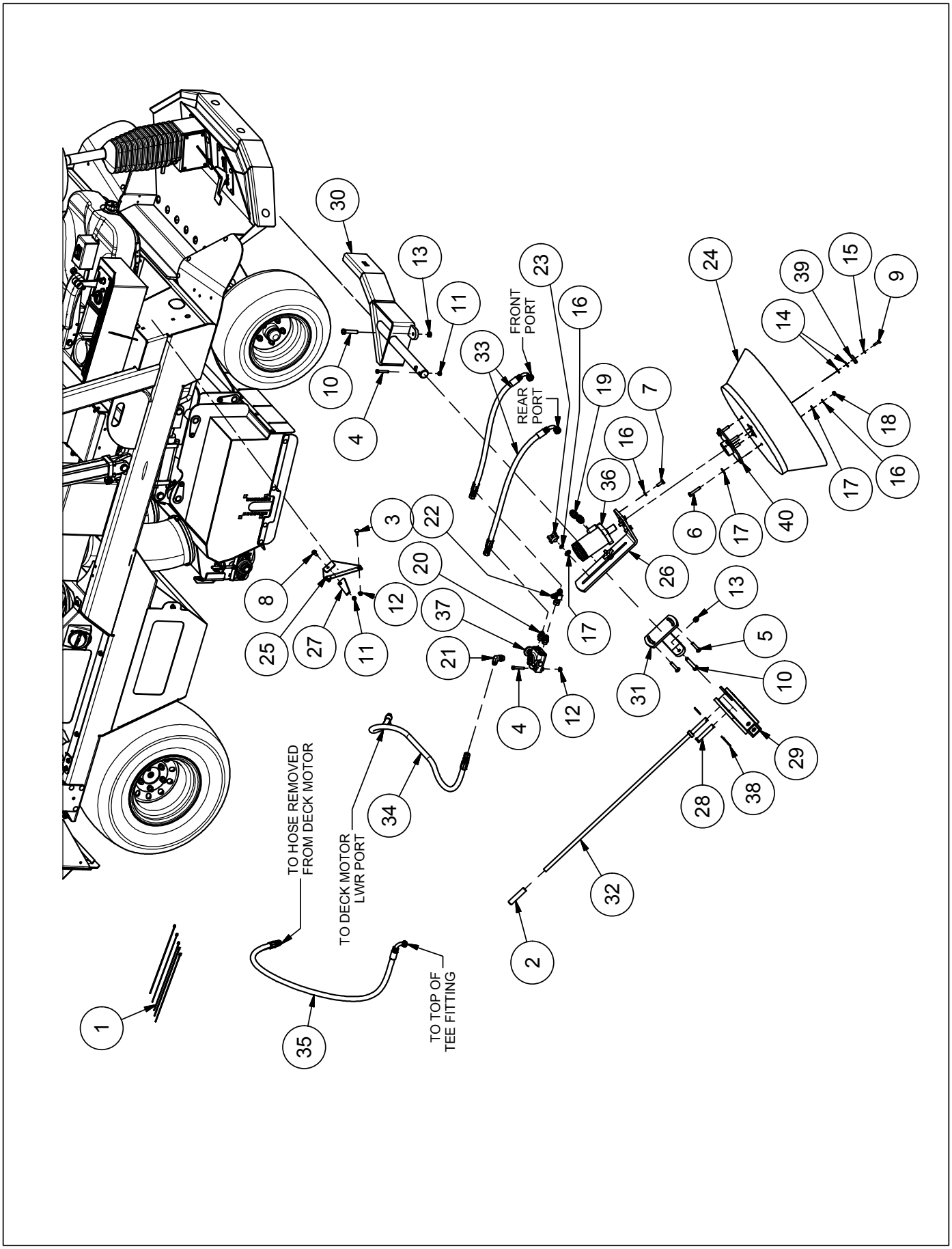
FRONT PORT
REAR PORT
TO HOSE REMOVED FROM DECK MOTOR
TO DECK MOTOR LWR PORT
TO TOP OF TEE FITTING

Kit, Light

Customer Install P/N: 300072
Factory Install P/N: 300073

Parts List			
ITEM	QTY	PART #	DESCRIPTION
1	10	100578	CABLE TIE, 14" BLACK
2	16	110020	Bolt, 5/16-18 X 0.75 in Carriage
3	4	110117	CLAMP, ADEL AC4 .265 HOLE
4	4	110154	Bolt, 1/4-20 X 0.75 in Carriage
5	2	110345	NUT, 8-32 NYLOCK
6	1	110444	BOLT, 5/16-18 X 3/4 WIZ FLANGE
7	17	110606	NUT, 5/16-18 WIZ FLANGE
8	4	110630	NUT, 1/4-20 LOCK (NYLON INSERT)
9	8	110631	NUT, 10-24 LOCK NYLON INSERT
10	2	110709	SCREW, 10-24 X 3/4 MACH RND HD SLT
11	1	110728	CLAMP, ADEL DOUBLE .75 X .5 X .406
12	4	110914	SCREW, 10-24 X 1 1/2 RND PHLP
13	6"	130004	WIRE, 14 GA BLACK
14	7	130059	CONNECTOR, 2 CAVITY DEUTSCH
15	7	130061	SECONDARY LOCK, DEUTSCH PLUG
16	25	132055	TERMINAL, CLOSED BARREL 18-16
17	3	132057	CONNECTOR, 3 CAVITY DEUTSCH
18	3	132058	SECONDARY LOCK, DEUTSCH
19	1	132072	SWITCH - TURN SIGNAL
20	1	132073	SWITH - HAZARD
21	1	132074	FUSE BLOCK, MINI FUSE STYLE
22	4	132075	DIODE, MINI FUSE 1-AMP
23	1	302035	DECAL, HAZARD LIGHTS
24	2	302037	REFLECTOR - TAPE, RED
25	2	302038	REFLECTOR - TAPE, YELLOW
26	4	311440	GUARD - LIGHT
27	1	332007	HARNESS, LIGHT KIT RELAY
28	1	332008	HARNESS, LIGHT KIT ELECTRICAL
29	2	332009	LIGHT - STT/WARNING, RED/AMBER, LED
30	2	332010	LIGHT - WARNING, AMBER, LED
31	2	332011	LIGHT - WARNING, AMBER, RECT, LED
32	2	510960	SCREW, 10-24 X 1/2 RHSS
33	2	511102	SCREW, 8-32 X 3/4 SLOTTED
34	2	532130	LIGHT, WORK LAMP, LED

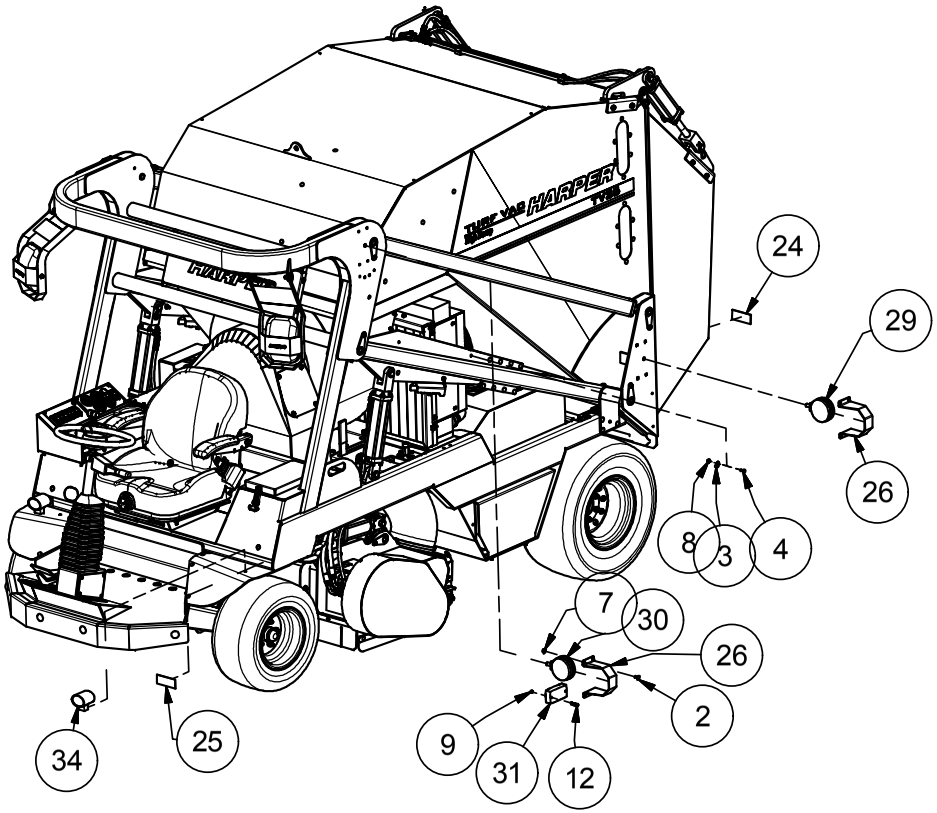

3/7/2016

Kit, Backup Camera

Customer Install P/N: 300074
Factory Install P/N: 300075

Parts List			
ITEM	QTY	PART #	DESCRIPTION
1	10	100578	CABLE TIE 14" BLACK 50 Lb Tens
2	1	110020	Bolt, 5/16-18 X 0.75 in Carriage
3	6	110069	WASHER, 5/16" FLAT SAE
4	2	110074	Hex Nut M6 X 1.0 Thd
5	8	110117	CLAMP, ADEL AC4 .265 HOLE
6	3	110154	Bolt, 1/4-20 X 0.75 in Carriage
7	2	110290	NUT, 1/4-20 WIZ FLANGE
8	5	110358	Bolt, 1/4-20 X 0.625 in Carriage
9	2	110484	BOLT, M6x1 x 16 Gr 10.9
10	2	110603	NUT, 5/16-18 LOCK (NYLON)
11	8	110630	NUT, 1/4-20 LOCK (NYLON INSERT)
12	2	110692	WASHER, 6 mm LOCK
13	2	110726	CLAMP, ADEL .75WX.5IDx.406 HOLE
14	1	130047	CONNECTOR, 2 CAVITY, DEUTSCH DT (DT-04-2P)
15	1	130048	SECONDARY LOCK, DEUTSCH DT (W2P)
16	2	132096	Terminal, Solid Pin, 18-16 Deutsch
17	1	302068	CAMERA, BACKUP
18	1	311674	BRACKET, CAMERA MOUNTING
19	2	710586	SCREW, 1/4 X 1 TEK SELF-TAP

3/8/2016

NOTES

Harper Industries, Inc.
151 E. Highway 160
Harper, KS 67058

Telephone: 620-896-7381
Toll-Free: 800-835-1042
Fax: 620-896-7129

Website: www.harperindustries.com

E-mail: info@harperindustries.com