HK 4200
SWEEPER

Serial Number: 21A01+
Part #: 301016

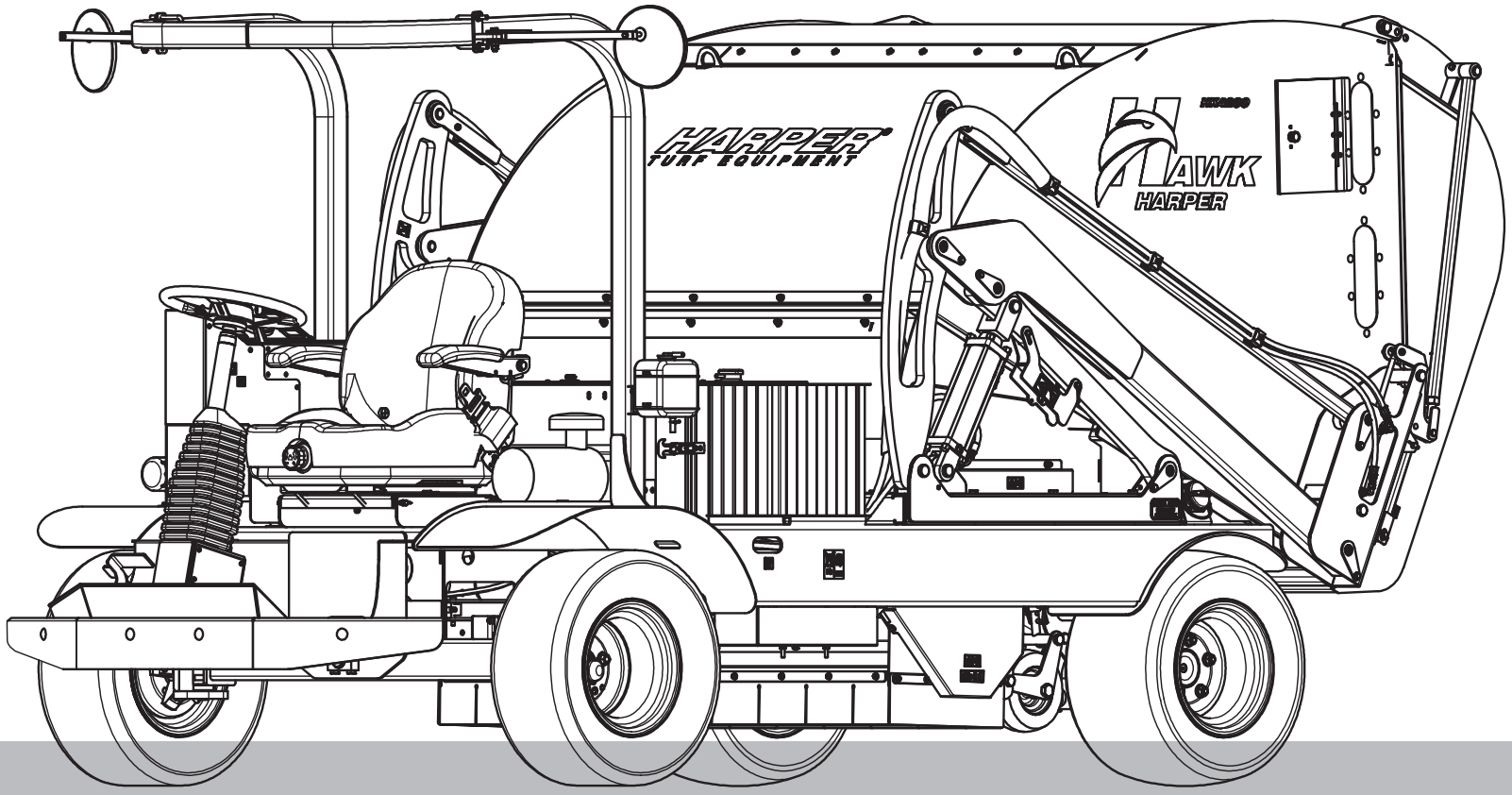

HARPER HAWK OPERATOR'S MANUAL

1-2026

HARPER INDUSTRIES INC

Thank you for purchasing a Harper Hawk.

As with all Harper products, the Harper Hawk has been developed through tough design and testing procedures to produce a top-quality machine. This manual gives assembly, operating, and service information for the model HK4200 Sweeper and was written in compliance with ISO 3600: 2015(E). Please read and understand all instructional material included with the Sweeper or its components before assembling and operating the equipment. For identification of replacement parts, see the Parts Manual.

A Sweeper can present hazards to an operator who follows unsafe procedures in either the operation or maintenance of the unit. Therefore, **SAFETY WARNINGS** are presented at certain locations in the text.

THIS SYMBOL: **SAFETY WARNING!**

MEANING: Failure to understand and obey this warning may result in injury or death to you or others. Whenever this symbol is used, please pay very close attention to the information presented, and make sure you fully understand. If you do not, contact your dealer or Harper Industries, Inc. for clarification.

SAFETY WARNING!

ALL SHIELDS AND GUARDS MUST BE IN PLACE FOR PROPER AND SAFE OPERATION OF THIS EQUIPMENT. WHERE THEY ARE SHOWN REMOVED IN THIS MANUAL, IT IS FOR PURPOSES OF ILLUSTRATION AND INSTRUCTION ONLY. DO NOT OPERATE THIS EQUIPMENT UNLESS ALL SHIELDS AND GUARDS ARE IN PLACE.

WARNING: Breathing diesel engine exhaust exposes you to chemicals known to the State of California to cause cancer and birth defects or other reproductive harm.

- Always start and operate the engine in a well-ventilated area.
- If in an enclosed area, vent the exhaust to the outside.
- Do not modify or tamper with the exhaust system.
- Do not idle the engine except as necessary.

For more information go to www.P65warnings.ca.gov/diesel

Harper Industries, Inc. is continually striving to improve the design and performance of its products. We reserve the right to make changes in specifications and design without thereby incurring any obligation relative to previously manufactured products.

© 2026 Harper Industries, Inc.
The Harper name is a registered trademark of Harper Industries, Inc. All other brand and product names are trademarks or registered trademarks of their respective companies.

LIMITED WARRANTY

Harper Industries, Inc. (HII) warrants to each purchaser of a new Harper Hawk from an authorized dealer or representative, that such equipment is free of manufacturer's defects in workmanship and materials which appear while in normal service for a period of ONE YEAR commencing with delivery to the original user.

The obligation of HII under this warranty is expressly limited, at our option, to replacement or repair at a service facility designated by Harper Industries or at the manufacturing plant in Harper, KS. A part will be replaced after inspection discloses it to have been defective. This warranty does not apply to defects caused by damage or unreasonable use (including failure to provide reasonable and necessary maintenance, or by performing functions without genuine Harper Hawk accessories) while in the possession of the consumer.

Warranty is limited to parts, labor and ground freight delivery of replacement parts. HII shall not be liable for the consequential damages of any kind, including but not limited to consequential labor costs or transportation charges in connection with replacement or repair of defective parts.

This warranty does not apply to parts subjected to misuse, abuse, alteration, improper or inadequate maintenance, or normal wear (including belts, battery, chains, filters, paddles, and brush).

Engines are not covered under this warranty. Refer to manufacturer's warranty for specific warranty information. Harper Industries, its agents or representatives, make or imply no other warranties.

Harper Industries makes no warranty with respect to trade accessories. They are subject to the warranties of their respective manufacturers.

ANY IMPLIED OR STATUTORY WARRANTIES, INCLUDING ANY WARRANTY OR MERCHANTABILITY OR FITNESS FOR A PARTICULAR PURPOSE, ARE EXPRESSLY LIMITED TO THE DURATION OF THIS WRITTEN WARRANTY. HII makes no other express warranty, nor is anyone authorized to make any on behalf of HII.

For further information please contact your nearest Harper Hawk dealer.

RECORDS

Date of Purchase _____ / _____ / _____

Dealer's Name _____

Dealer's Phone _____

Serial Number Machine _____

Serial Number Engine _____

Supplier's declaration of conformity

Australian Government | acma Australian Communications and Media Authority

This is the Australian Communications and Media Authority (ACMA) approved form for a declaration of conformity under the following legislative instruments:

- Radiocommunications Equipment (General) Rules 2021
- Radiocommunications Labelling (Electromagnetic Compatibility) Notice 2017.

This is a sample form for a declaration of conformity under the Telecommunications (Labelling Notice for Customer Equipment and Customer Cabling) Instrument 2015.

Instructions for completion

Do not return this form to the ACMA. This completed form must be retained by the supplier as part of the documentation required for the compliance records. However, it must be made available for inspection by the ACMA when requested.

Supplier's details (manufacturer, importer or authorised agent)

Company name (or individual)

TORO Australia Pty. Ltd
Trading as

ACN/ARBN

N1625

or

New Zealand IRDN

47 001 310 443

Street address (Australia or New Zealand)

53 Howards Rd	
Beverly, S.A	POSTCODE 5009
Phone:	

Product details and date of manufacture

Product description – brand name, type, current model, lot, batch or serial number (if available), software/firmware version (if applicable)

Model No.	Product Description
300079	HK4200 – 2WD Self-Propelled Sweeper

Compliance – applicable standards and other supporting documents

Evidence of compliance with applicable standards may be demonstrated by test reports, endorsed/accredited test reports, certification/competent body statements.

Having had regard to these documents, I am satisfied the above-mentioned product complies with the requirements of the relevant ACMA standards made under the *Radiocommunications Act 1992* and/or the *Telecommunications Act 1997.*

List these documents including details of the standard title, number and, if applicable, number of the test report/endorsed test report or certification/competent body statement.

AS/NZS CISPR 12:2007

Declaration

I hereby declare that:

1. I am authorised to make this declaration on behalf of the Company mentioned above
2. the contents of this form are true and correct
3. the product mentioned above complies with the applicable above mentioned standards and all products supplied under this declaration will be identical to the product identified above
4. I understand that giving false or misleading information is a serious offence.

Note: It is an offence to knowingly provide false or misleading information to a Commonwealth entity or a person who is exercising powers, performing functions under, or in connection with, a law of the Commonwealth. It is an offence to knowingly provide false or misleading information or documents in compliance or purported compliance with a law of the Commonwealth. (See sections 137.1 and 137.2 of the *Criminal Code Act 1995.*)

Penalty: 12 months imprisonment

SIGNATURE OF SUPPLIER OR AGENT	POSITION IN ORGANISATION VP of Engineering
PRINT NAME Joe Biggerstaff	DATE 22-Jul-24

The *Privacy Act 1988* (Cth) (the Privacy Act) imposes obligations on the ACMA in relation to the collection, security, quality, access, use and disclosure of personal information. These obligations are detailed in the Australian Privacy Principles.

The ACMA may only collect personal information if it is reasonably necessary for, or directly related to, one or more of the ACMA's functions or activities.

The purpose of collecting the personal information in this form is to ensure the supplier is identified in the 'declaration of conformity'. If this declaration of conformity is not completed and the requested information is not provided, a compliance label cannot be applied.

Further information on the Privacy Act and the ACMA's privacy policy is available at www.acma.gov.au/privacypolicy. The privacy policy contains details about how you may access personal information about you that is held by the ACMA, and seek the correction of such information. It also explains how you may complain about a breach of the Privacy Act and how we will deal with such a complaint.

Should you have any questions in this regard, please contact the ACMA's privacy contact officer on telephone on 1800 226 667 or by email at privacy@acma.gov.au.

MANUFACTURER'S NOTICE OF COMPLIANCE
AUSTRALIA WORK AND SAFETY ACT AND REGULATIONS OF 2011

The turf machine identified below was designed and manufactured by Harper Industries, Inc. headquartered in Harper Kansas, USA.

Hazard identification, Risk Assessment and Risk Reduction: Harper Industries has undertaken a hazard identification, risk assessment and risk reduction procedure on a sample of the product and model identified below. The procedure undertaken followed the principles identified in the Australian safety standard AS/NZS 4024.1201 – Safety of *machinery – General principles for design – Risk assessment and risk reduction.* The procedure followed meets the requirements specified in the Occupational Work and Safety Regulations 2011 as amended for the design and manufacture of plant. The machine has been designed and manufactured to comply with the relevant and applicable industry safety standards. Appropriate hazard elimination or control measures have been incorporated into the product design and specifications.

Health and Safety Information: An operator's manual, which includes instructions on the safe use of the machine, is provided with each machine. Product warning signs are affixed to the product where necessary.

Operator Noise Exposure: The sound level at the operator's station of ride-on equipment has been measured on a representative sample of a machine in accordance with ISO 5131, Annex B or equivalent standard. The sound level depends upon the machine operating conditions such as engine and travel speed, as well as the condition and maintenance of the machine.
Operator Station Sound Level: 97 d(B)A

Product Description	Turf Sweeper
Model Number(s)	HK4200 – 300079, HK4400 - 300080
Manufacturing Unit	Harper Industries Inc., Harper, Kansas, USA
Authorized Representative Signature	
Name	Joe Biggerstaff, VP Engineering
Date	September 23, 2024

151 E. US Hwy 160
Harper, Kansas 67058, USA
www.harperindustries.com

620.896.7381
620.896.7129
800.835.1042
info@harperindustries.com

Table of Contents

OPERATOR SECTION
To the Owner or Operator..... 1
Warranty Statement..... 2
Declaration of Conformity..... 3-5
Table of Contents..... 7
Specifications..... 8
Identifications
Control Identification..... 9
Machine Display Identification..... 10-11
Deck Identification..... 12
Hopper Identification..... 12

Safety Guidelines
Equipment & Controls..... 13
Safety Decals..... 13
Diesel Fuel..... 13
Guards & Shields..... 13
Battery..... 13
Hydraulics..... 14
Safety Interlocks/Wiring Logic..... 14
Safety Symbols..... 14-15
Locations..... 16
Safety Locks..... 17

Operation
Before Operation..... 18
Operation..... 19
Operating Machine..... 20
Sweeping Performance..... 21
After Operation..... 21
Storage..... 21

Maintenance
Hydraulic System..... 22
Grease Zerk Locations..... 23
Jack Points..... 23
Air Cleaner..... 23
Cooling System..... 24
Engine Compartment..... 24
Engine Oil..... 24
Fuel Components..... 25
Fuse/Relay Panel..... 25
Battery Replacement..... 25
Deck Maintenance/Service..... 26
Paddle & Brush..... 26
Chain Drive..... 27
Hopper Maintenance..... 28
Tow Procedure
Park Brake Release..... 28
Opening the By-Pass Valve..... 29
Transporting Machine..... 30

Serial Number IDs..... 30
Standard Torque Chart..... 31
Service Parts..... 31
Maintenance Schedule..... 32-33

Specifications

Noise Levels	97 dBA
Power	Diesel - Kubota V1505-E4B 24.8 HP @ 2300 RPM
Configuration	Self-contained, 4-wheel configuration with front steering, two drive wheels, and a rear mounted, high-lift, debris hopper with patented recirculating air technology
Sweeper	60 in (152 cm) wide x 12 in (30 cm) diameter sweeping rotor contained in a floating deck housing with rear mounted gauge wheels and front mounted anti-scalp wheels; rises to transport position and lowers to operating position by hydraulic cylinder; Polypropylene brush is standard
Paddle	18 in (45 cm) diameter with 4 removable paddles that is also contained inside the floating deck housing.
Debris Hopper	Capacity – 3.36 cubic yards (2.57 cu m)
Lift	Rises 71" (180 cm) above the ground to dump debris into vehicle or container.
Drive	Hydrostatic pump directly coupled to engine drives two Poclain high-efficiency piston drive hydraulic motors on rear wheels with two speed operation; foot operated pedal for forward and reverse drive.
Speed	Infinitely variable, 0-5 mph (0-8 km/h) low (operation), 0-10 mph (0-16 km/h) high (transport), 0-10 mph reverse; Dynamic braking through the hydrostatic drive system, mechanically applied and hydraulically released parking brake on rear wheels.
Main Frame	Welded and formed steel frame
Tire and Wheels	Front: 24x9.5-12 Litefoot 4ply, Rear: 24x12-12 Litefoot 4ply Pressure: 20 lbs.
Compaction	Front: 9.66 psi (66.6 kPa), Rear: 9.6 psi (66.2 kPa)
Steering	Power steering with automotive type steering wheel, tilt steering
Controls	Hydraulic lift/lower of debris hopper Hydraulic open/close of debris hopper door Hydraulic raise/lower of sweeping mechanism head assembly Hydraulic power of sweeper and paddle
Seat	Adjustable ride suspension, high back, and retractable seat belt
Electrical	12-volt, electronic key start
Dimensions	Length – 153 in (389 cm), Height – 79 in (201 cm), Width – 76.5 in (194 cm), Wheel Base – 80 in (203 cm)
Weight	4280 lbs. (1941 kg)
Liquid Capacities	Fuel – 12 gal (45 L); Hydraulic Fluid – 2 gal (7.6 L) Tank Engine Oil – 1.59 gal (6.0 L); Coolant – 2.25 gal (8.5 L)
Safety	Certified ROPS: ISO 21299 ref Mass 2454 Kg Seatbelt Electrical Interlocks: • To start the machine: Must be in neutral & deck rotor/paddle must be OFF. • To turn deck rotor/paddle ON: Operator must be in the seat. • Park brake is applied when the operator is out of the seat.
Hydraulic Oil	Crown AW46; ISO 46 Hydraulic Oil
Optional Attachments	Canopy, Work Lights, Curb Brush, and Beacon - See Part's Manual pages 11.1-11.3 for more details.

NOTE: *Following publication of this manual, certain changes in standard equipment and/or options may have occurred which would not be included in these pages. Your Harper dealer is the best source for up-to-date information.*

Control Identification

ROPS – Roll-Over Protective Structure is certified and designed to protect operator in case of a roll-over. Always wear a safety belt.

Steering Wheel – steering is hydraulically controlled. Steering wheel angle may be adjusted with tilt lever.

Control Panel – all functions of the Harper Hawk may be controlled from the operator's seat.

Foot Pedal – hydrostatic pump is controlled by pushing foot pedal forward and backward.

Lift Mechanism – raises the bottom of the hopper to a height of 71" (180 cm) to dump into a vehicle or container.
Use extreme caution when raising the hopper as the top can reach approx. 134 in (340 cm).

Deck Transition – stationary shielding that surrounds the deck and provides a seal between the hopper and deck.

Sweeper Deck – contains rotating sweeping rotor and paddle that moves material from the ground to the hopper.

Engine – Diesel: Kubota V1505-E4B 24.8 HP

Hopper – stores up to 3.3 cubic yards (2.57 cu m) of material. Always empty hopper at end of operation.

Hopper Door – opens, closes and locks when the lever is activated by the operator.

Radiator/Oil Cooler – equipped with removable screen.

Canopy (optional) – attachment that bolts to the ROPS to provide shade for the operator; ABS plastic.

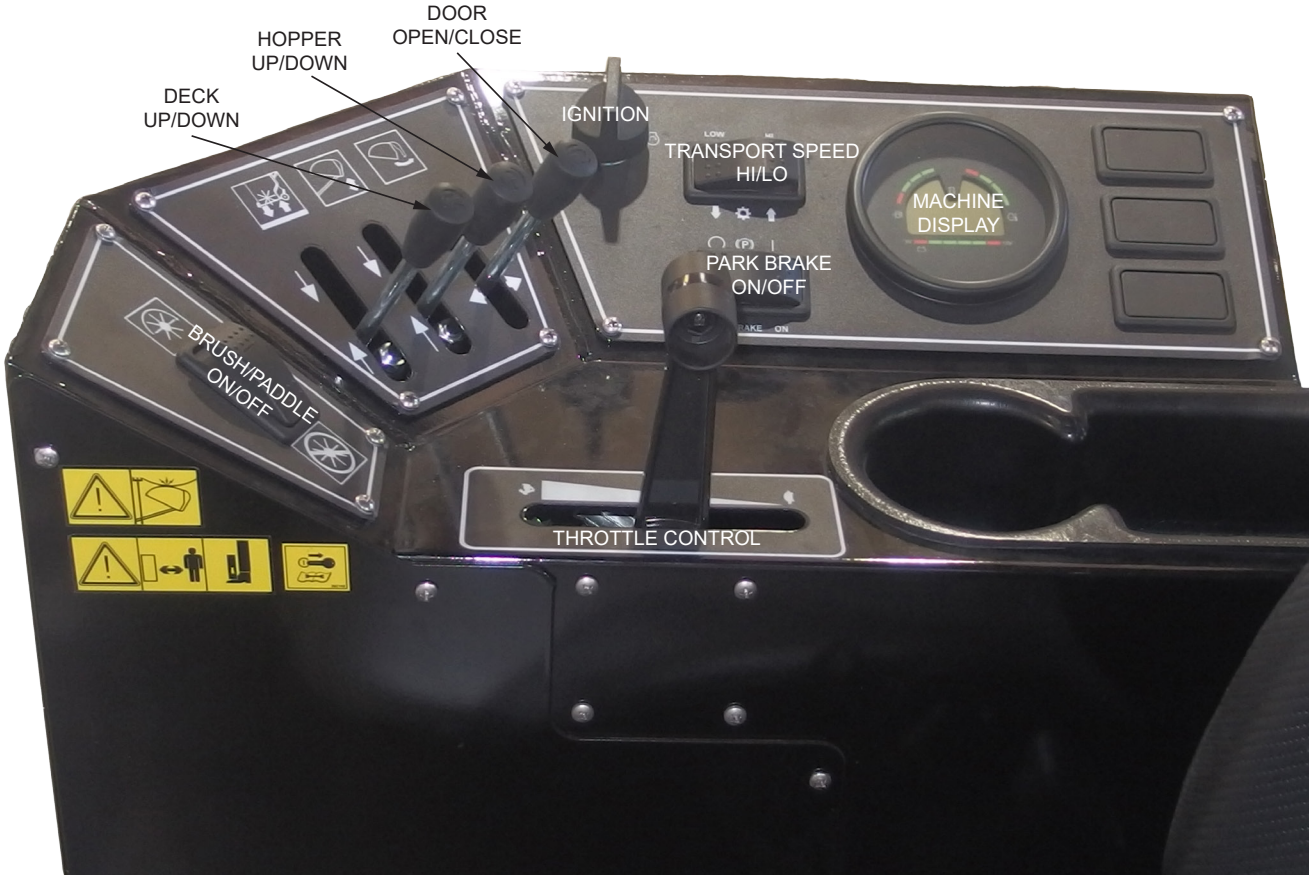

Brush/Paddle ON/OFF – turn deck on when engine is low to mid-throttle.

Deck UP/DOWN – deck is hydraulically raised and lowered using lever.

Hopper UP/DOWN – hopper is hydraulically raised and lowered using lever. Raise hopper with extreme caution.

Door OPEN/CLOSE – hopper door is hydraulically opened and closed with lever.

Ignition – turn key to right to start unit. Remove key when unit is not in use. Never leave machine unattended with key in ignition.

Engine Preheat – use the pre-heat position on the ignition switch when starting a cold engine. Hold the ignition key in that position until the glow lamp turns off. Preheating may not be needed if the engine is already warm.

Transport Speed HI/LO – ALWAYS SWEEP WITH TRANSMISSION IN LOW. Use high range when traveling between operations.

Park Brake ON/OFF – set park brake when unit is not in use or is parked on an incline. Make sure park brake is disengaged before operation.

Throttle Control – adjust engine speed with throttle. Start at low throttle, allow engine to warm up, then operate machine at full throttle.

Machine Display – This display has indicator lights for the following: Low Engine Oil, Glow Lamp, Neutral, Parking Brake, Low Battery, Low Hydraulic Oil and Hydraulic Temp. The display also has gauges for Fuel Level, Engine Temperature and Battery Level.

SAFETY WARNING!

Do not leave the Harper Hawk unattended, or attempt any service or inspection unless the machine has come to a complete stop and the engine has been shut off.

Machine Display Identification

1. High Engine Temperature – illuminates when the engine temperature exceeds 221° F (105° C). If this indicator is illuminated, STOP operation immediately and turn machine OFF. Inspect the radiator screen and radiator for debris. If debris is found, remove debris and restart machine to allow the engine to cool properly. Do NOT operate machine until the temperature returns to normal operating temperature. If illuminates repeatedly, further technical troubleshooting is necessary.

2. Oil Pressure Indicator – illuminates when oil pressure is below 7 psi (48 kPa). Turn the machine OFF immediately if this indicator is illuminated.

3. Glow Plug Indicator – illuminates when the ignition switch is in the pre-heat position and the glow plugs are activated. The pre-heat electrical circuit includes a glow lamp timer that controls the indicator. Once the indicator turns off, the machine is ready to start.

4. Neutral Indicator – illuminates when the machine is in neutral.

5. Park Brake Indicator – illuminates when the park brake is applied.

6. Battery Indicator – illuminates when the battery has low voltage.

7. Low Hydraulic Oil Indicator – illuminates when hydraulic oil is low in the hydraulic tank. An alarm also sounds when the hydraulic oil is low. Turn the machine OFF immediately if this indicator is illuminated and alarm sounds. Ensure that there are no leaks and fill hydraulic tank with hydraulic oil before restarting machine.

8. High Temperature Hydraulic Oil Indicator – illuminates when the hydraulic oil temperature exceeds 190° F. If this light illuminates, STOP operation of machine and turn machine OFF. Clean debris from radiator/oil cooler and screen. Then restart machine to allow the hydraulic oil to cool properly. If this light illuminates repeatedly, further technical troubleshooting is necessary.

9. Fuel Gauge – displays fuel level in fuel tank.

10. Engine Temperature Gauge – displays engine coolant temperature.

11. Machine Hours – Records and displays machine hours.

12. Battery Gauge – displays level of battery voltage.

Deck Identification

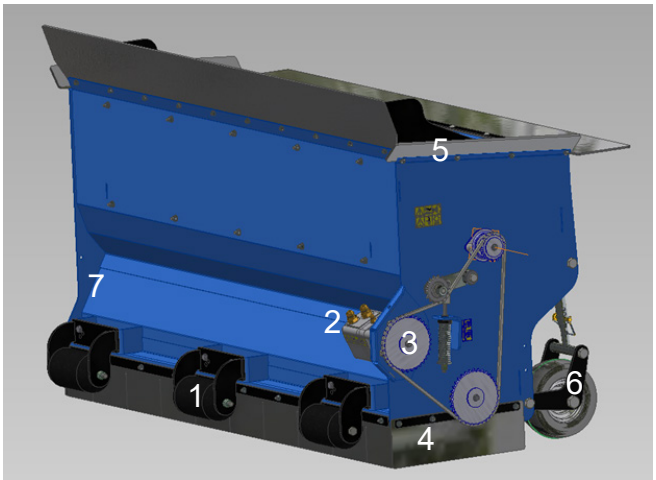

1. Anti-Scalp Wheels – prevent the deck from gouging the turf when used in uneven terrain. These are intended as anti-scalp wheels only and not intended to roll on the ground continuously. See operation section in manual for adjustment instructions.

2. Hydraulic Motor – powers the sweeping rotor and paddle.

3. Chain Drive – connects sprockets of hydraulic motor, paddle, and sweeping rotor.

4. Lower Deck Skirting – seals the deck off at the ground level to reduce dust and contain debris inside the deck.

5. Upper Deck Seal – creates a seal between the deck and the deck transition.

6. Adjustable Gauge Wheels – controls the sweeping height of the deck and sweeping rotor. See Operation section in manual for adjustment instructions.

7. Deck Lift Safety Lock – used to secure the deck in the UP position. Safety lock is located on the front RH side of the deck. See instructions in the safety lock section.

Hopper Identification

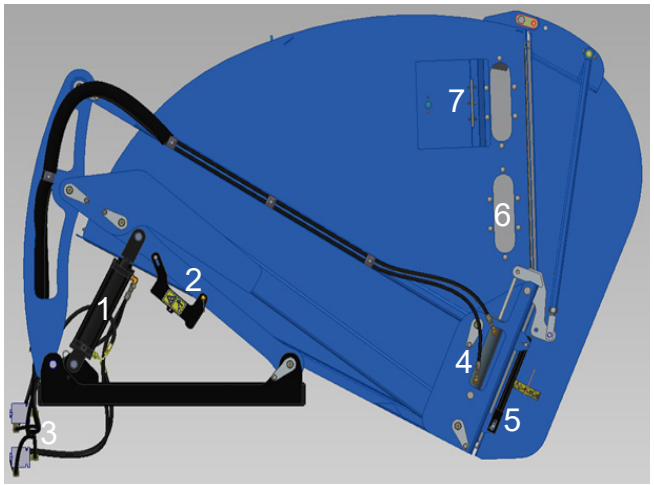

1. Hopper Lift Cylinders – used to raise and lower the hopper.

2. Hopper Lift Safety Locks – used to secure the hopper in UP position. Safety locks are located on both lift cylinders and should be used anytime a person is below the hopper. See instructions in the safety locks section.

3. Pilot Operated Check Valves – included in both the hopper lift and hopper door hydraulic plumbing circuit. See the hydraulic schematic in the parts manual for further details.

4. Hopper Door Cylinders – used to open and close the hopper door.

5. Hopper Door Safety Lock – use safety lock to secure hopper door in the OPEN position. Safety lock should be used when working inside hopper or below the open door. See instructions on next page.

6. Sight Glass Windows – located on each side of the hopper allows the operator to know the hopper fill level.

7. Large Debris Door – located on LH side of machine can be used to place larger debris (that can not be picked up by the machine) inside the hopper.

Safety Guidelines

Equipment & Controls

- **Read and understand this manual.**
- Altering this equipment in any manner which adversely affects its operation, performance, durability, or use will void the warranty and may cause hazardous conditions.
- Know the location and function of all controls and how to stop this equipment quickly in an emergency before you operate the equipment.
- Keep all nuts, bolts and screws tight to help ensure safe operation.
- Use genuine factory parts or parts with equivalent characteristics, including type, strength and material. Failure to do so may result in product malfunction and possible injury to the operator and/ or others.
- If hardware is not secure, or if some of the hardware is over-tightened, equipment failure may result, posing possible safety hazards.
- To prevent possible eye injury, always wear SAFETY GLASSES while operating equipment.
- To prevent hearing loss, always wear hearing protection while operating equipment.
- Do not allow children to operate or ride on this machine.
- Not for use on public roadways.

Diesel Fuel

SAFETY WARNING!

Diesel fuel is extremely flammable and can be highly explosive.

- Always use an approved container for transporting diesel fuel.
- Do not allow open flames or sparks while performing maintenance or refueling.
- Never remove fuel tank cap or add fuel when engine is running or while it's hot.
- Only use ultra low sulfur diesel.
- Never fill fuel tank indoors. Fumes are heavy and will sink to the lowest point, collect and become hazardous.
- Wipe up spilled fuel immediately.
- Do not store fuel in a room with an appliance that has a gas pilot or electrical switch that may cause sparks.
- Always store diesel outside in a safety can (a can with flame arrestor and pressure relief valve in pour spout).
- Never store the equipment with fuel in the tank inside a building where fumes may reach an open flame or spark.
- Allow the engine to cool before storing in any enclosure.
- Be certain to provide adequate ventilation if an engine must be run indoors exhaust fumes are dangerous.

Guards & Shields

- Keep all safety devices in place.
- Replace all worn, damaged, unusable, missing or lost safety shields and guards before operating the equipment.
- Keep the equipment in good condition.

Battery

SAFETY WARNING!

Batteries can produce explosive gas. Use extreme caution working on the battery.

- Ventilate when charging battery or using in an enclosed space.
- DO NOT produce sparks from cable clamps, tools, or other sources; and DO NOT allow flames or smoking in the vicinity of the battery.
- Shield eyes when working near battery.

Hydraulics

SAFETY WARNING!

Escaping fluid under pressure can penetrate skin causing serious injury.

To prevent serious injury or death:

- Relieve pressure on system before repairing, adjusting or disconnecting.
- Wear proper hand and eye protection when searching for leaks.
- Use wood or cardboard instead of hands when looking for leaks.
- Keep all components in good repair.
- Do not use any type of heat (welding, soldering, cutting torch, etc) near pressurized lines.

Safety Interlocks/Wiring Logic

- To start the machine, it must be in neutral, and the deck rotor and paddle must be OFF.
- To turn the deck rotor and paddle ON, the operator must be in the seat, the hydraulic oil temperature must be below 190° F, and hydraulic oil must be present in the tank.
- There is a 2 second time delay added to the seat switch to account for bounce.
- The park brake is applied when the operator is out of the seat.

Safety Decals

- If safety related or instructional decals become illegible or are removed, replace them immediately. Decals may be obtained from your Harper Dealer.
- If you replace parts that have such decals attached to them, make sure the decals are replaced with current versions, and are on the replacement parts before the machine is operated.
- All safety decals comply to the ISO Standard 11684: 1995(E).

Safety Symbols

1. High pressure fluid could be injected into body.

2. High pressure spray could erode flesh.

3. Hot surface could burn fingers or hands.

4. Never tip machine on soft ground or on a slope.

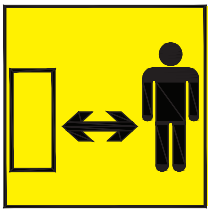

5. Stay a safe distance from machine when in use.

6. Stay clear of hopper door swing area while tractor engine is running.

7. Stay clear of raised hopper door unless safety locks are in place and secured.

8. Do not open or remove safety shields while engine/tractor is running.

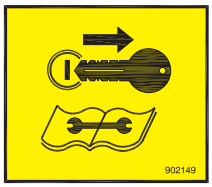

9. Read manual before starting/operating machine.

10. Safety alert symbol.

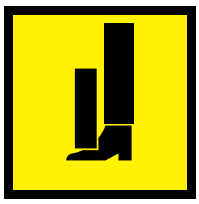

11. Crushing of toes or foot - Force applied from above.

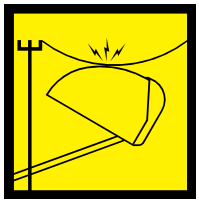

12. Electrical shock/electrocution.

13. Do not use hook for lifting machine.

14. Secure lifting cylinder with locking device before getting into hazardous area.

Safety Symbol Locations

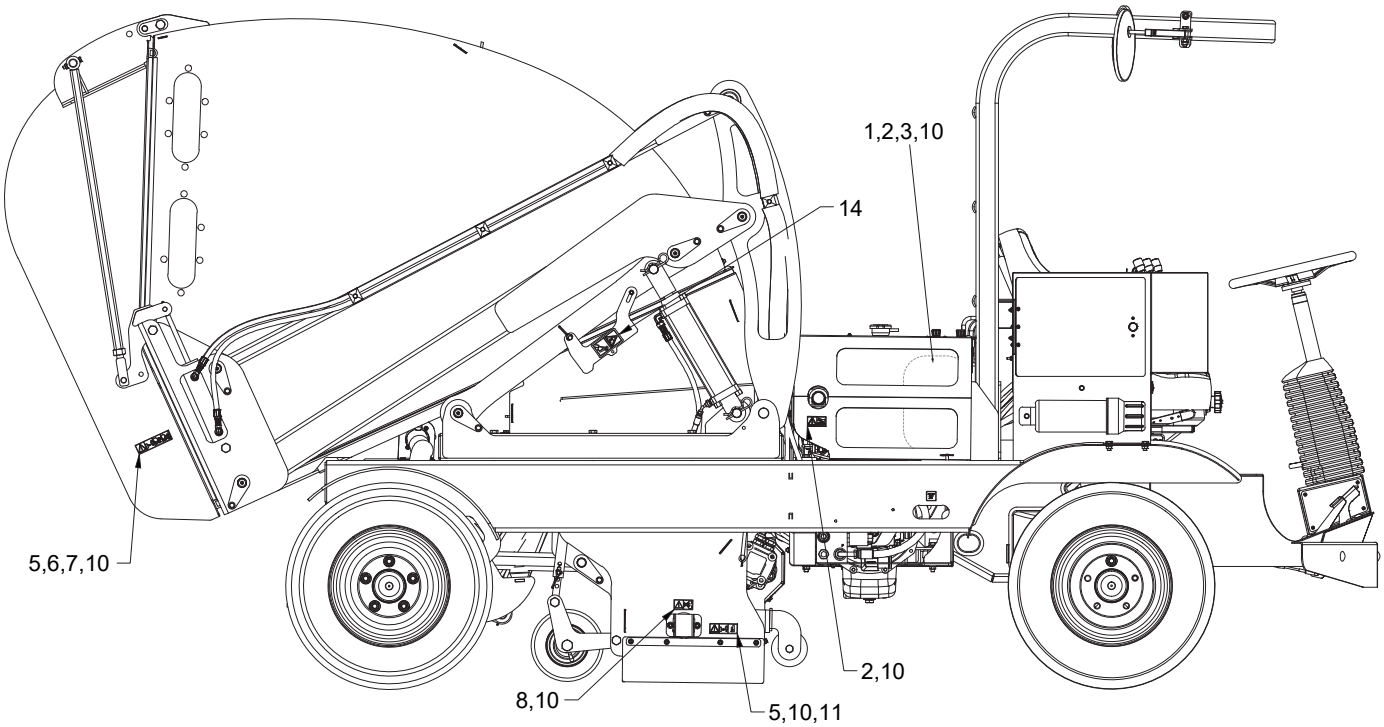

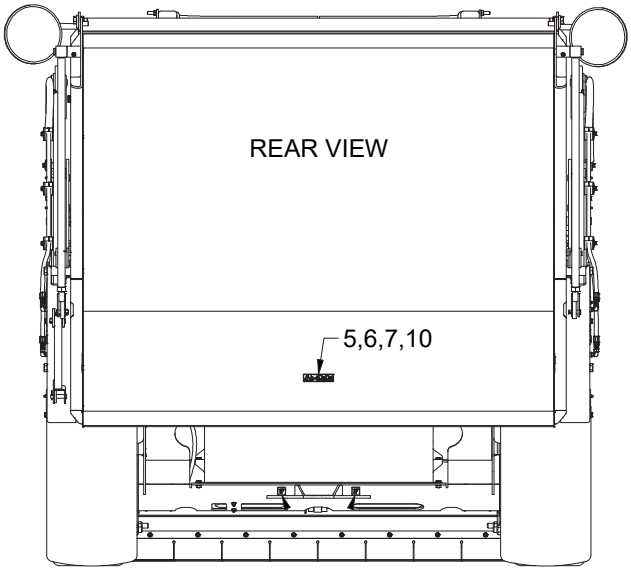

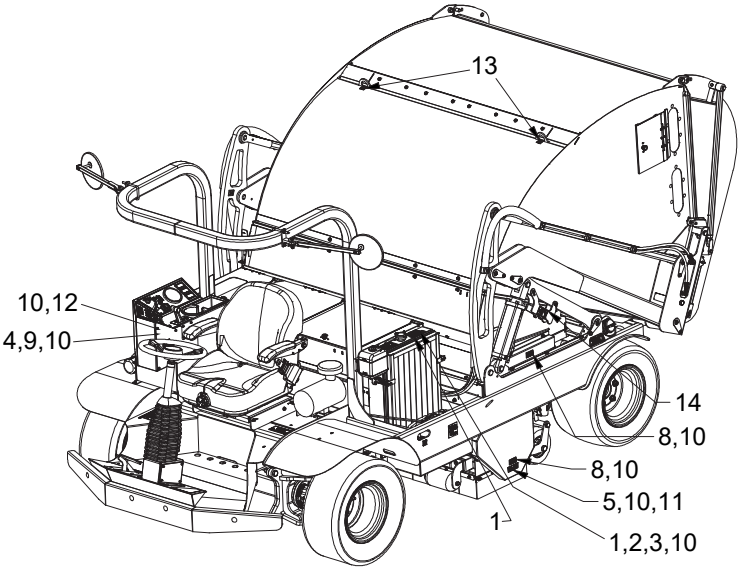

Safety Locks

SAFETY WARNING!

Failure to use safety locks could result in death or serious injury.

- **Deck Lift Safety Lock** – Secure the deck in the UP position when working or cleaning below the deck. The safety lock is located on the front RH side of the deck. Pin stop in the down position as shown in the picture below.

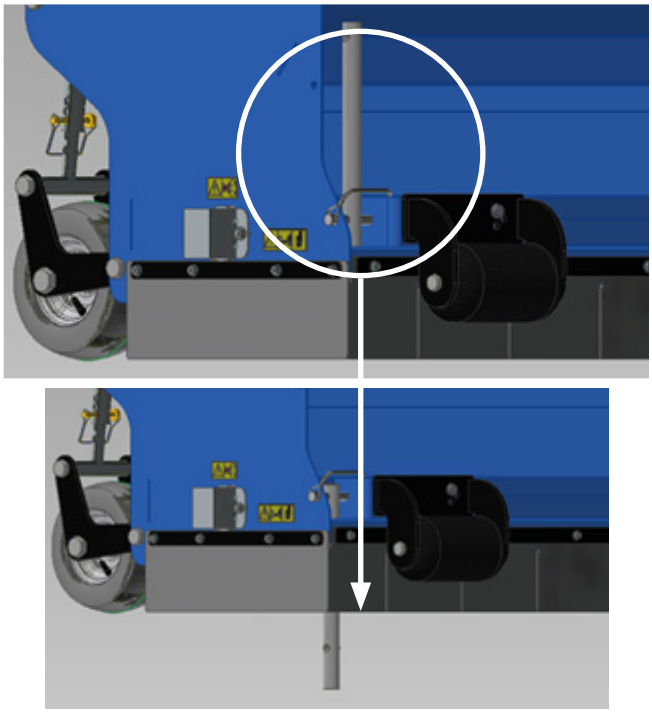

- **Hopper Lift Cylinders Safety Lock** – Secure the hopper in the UP position when working or standing below the hopper. Install cylinder safety lock to the hopper lift cylinders located on each side of the machine as shown in the picture below.

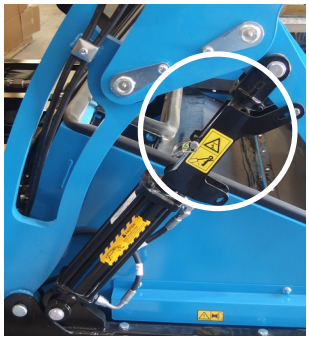

- **Hopper Door Safety Lock** – Secure hopper door in OPEN position when working inside the hopper or below the hopper door. Pin the safety stop to secure the door linkage as shown in the picture.

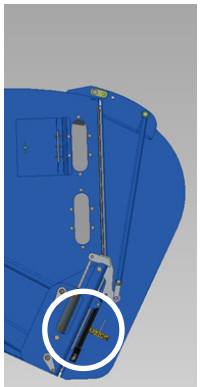

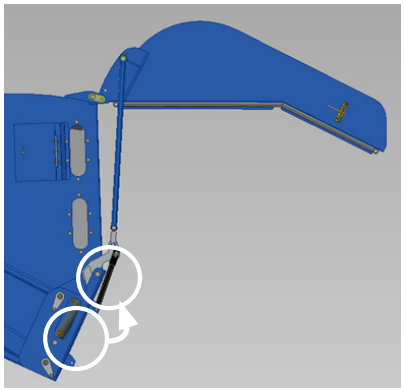

Operation

Before Operation

Safety Checklist

- ☐ Read and understand the Operator's Manual.
- ☐ Ensure the machine is equipped with safety stops for the hopper lift cylinders and hopper door. Ensure that all shields and guards are in place.
- ☐ Check the seat belt to make sure that it functions properly.
- ☐ Know the location and function of all controls and how to stop quickly in an emergency. The machine controls are identified in the previous Controls Identification section.
- ☐ Replace damaged or missing safety decals.

Perform the Daily Maintenance Checklist.

- ☐ Check engine oil level
- ☐ Check hydraulic oil level
- ☐ Check fuel level
- ☐ Check engine coolant level
- ☐ Visually inspect machine for fluid leaks, loose hardware, damaged parts, etc.
- ☐ Check radiator/oil cooler and screen for debris.
- ☐ Check engine air cleaner intake
- ☐ Grease as needed – see maintenance section for grease locations and intervals
- ☐ Visually inspect tires to ensure proper inflation

Setting the Sweeping Height

- Park on level ground.
- Start the machine and raise the deck using the LH lever located on the console.
- Secure the deck using the deck lift safety locks.
- Adjust gauge wheel to desired height. The deck height is set from the factory in the middle hole of both the tube and the rod. At this setting, a new brush will contact the surface. To adjust the brush to be more aggressive, raise the gauge wheel to the next set of holes that line up. To be less aggressive, lower the gauge wheel to the next set of holes that line up. The adjustments are approximately ¼" (.64 cm) increments. Set the gauge wheel height the same on both sides.

- Check the sweeping height. Repeat the steps in this section until desired sweeping height is determined.

Adjusting the Anti-Scalp Rollers

- The anti-scalp rollers are set from the factory so that the surface of the roller is approximately 1" (2.5 cm) below the front edge of the deck. To adjust, remove the bolts and nuts identified below and adjust up or down accordingly. The rollers can be adjusted in 3/8" (.95 cm) increments. These are intended as anti-scalp rollers only and not intended to roll on the ground continuously.

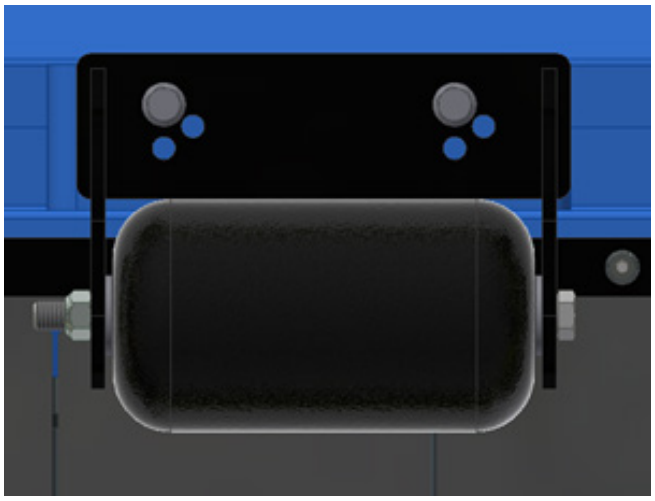

Debris Door Inside of Hopper

- A debris fill door is located on the inside of the hopper. The door has two different settings: UP & DOWN. The debris fill door can affect how the hopper fills. When sweeping light, dry material place the fill door in the UP position. When sweeping heavier material, place the door in the DOWN position. If unsure, then place in the DOWN position.

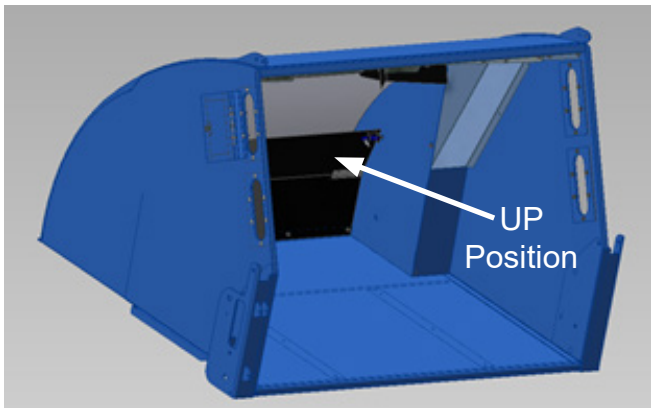

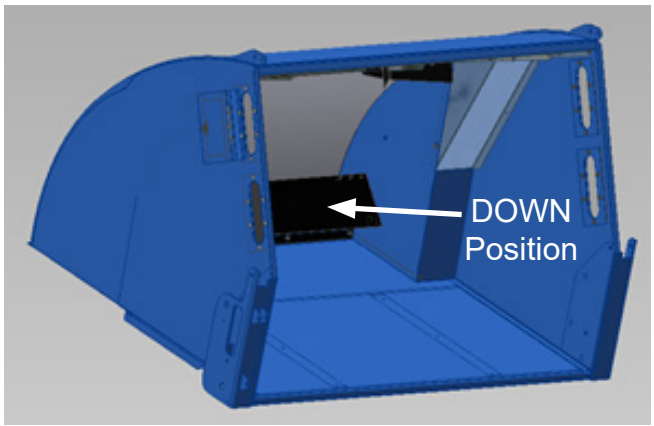

Operation

Adjust the seat and steering wheel as needed and wear seat belt during operation. The seat firmness can be adjusted via a rotating knob on the front. The seat is adjustible forward/ backward with a lever on the lower right.

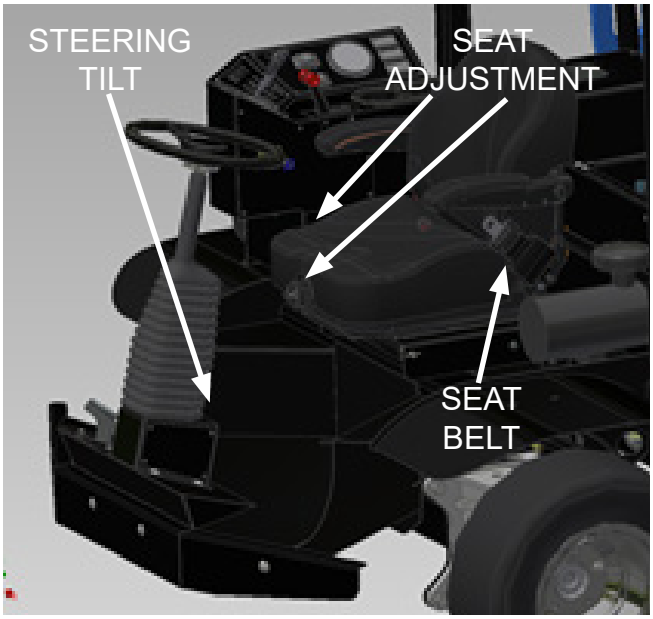

SAFETY WARNING!

Wear appropriate eye protection.

Starting the Machine

- Use the preheat position of the ignition switch until the glow plug indicator on the machine display turns OFF. (Preheating is not necessary if the engine is already warm).
- Turn the machine to the right to start.

For the engine to start, it must be in neutral and the deck rotor/paddle must be OFF.

During Operation

- In the event of an emergency, turn the key to the OFF position.
- Always keep a fire extinguisher near the Harper Hawk during operation.
- Keep clothing and all body parts away from rotating parts.
- Keep the engine area clean from debris and other accumulations to lessen the possibility of fire.

Operating Machine

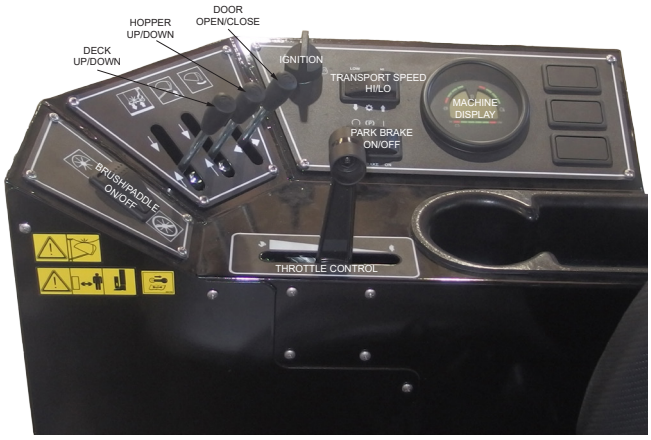

Adjusting Engine Speed

- The engine rpm is controlled by the throttle control lever. Start at low throttle, allow engine to warm up, then operate at full throttle. When sweeping and transporting the machine, operate at full throttle. When raising and dumping the hopper, operate at low to mid throttle.

Turning the Deck Rotor/Paddle ON/OFF

- Using the paddle switch on the console, place the switch in the ON position. When switching ON, make sure the engine rpm is at low throttle. Once ON, speed the engine up to full throttle.
- To turn the deck ON, the operator must be in the seat.

Raising and Lowering the Deck.

- Use the LH lever to operate the lift cylinder located on the rear side of the deck.
- The deck lift cylinder is attached to a pivot link that allows the deck to float with the contour of the ground. When the deck is lowered, hold the lever a few more seconds to ensure that the deck is in the float position.
- A deck height indicator is located on the front RH side of the deck so that the operator can easily view the deck height.

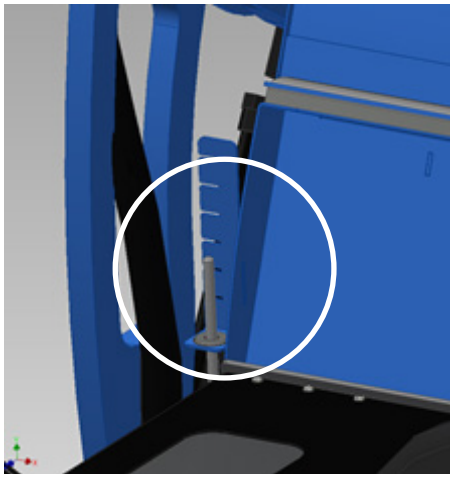

Filling the Hopper

- The hopper debris level can be determined by looking through the sight glass windows located on each side of the hopper.
- The large debris door can be opened to get a better view of the hopper debris level. It can be used to place large debris inside the hopper which cannot be picked up by the machine
- If the hopper is overfilled, it can cause the paddle rotor to plug.

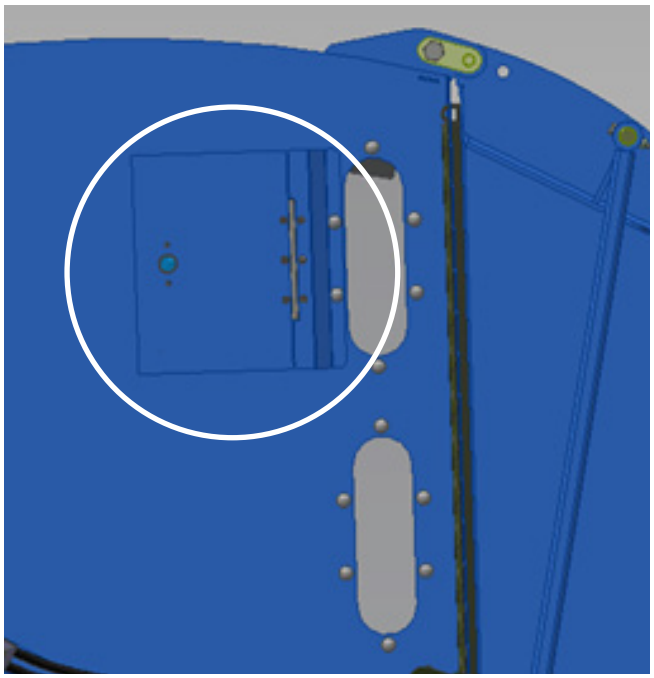

Emptying the Hopper

- When raising the hopper, only empty in an area with relatively flat ground. Do NOT raise the hopper on an incline greater than 10 degrees.
- Use the middle lever to operate the hopper lift cylinders.
- Once the hopper is in the UP position, use the RH lever to operate the hopper door cylinders to open and close the door.
- The hopper can be emptied in the low position; however, the angle of the hopper may not allow all the debris to slide out easily.

High/Low Gear

- High or Low gear is selected using the paddle switch on the console.
- When transporting, use high gear which has a speed range of 0-10mph.
- When sweeping, use low gear which has a speed range of 0-5 mph.

Applying the Park Brake

- When parking the machine or exiting the operator seat, apply the parking brake.
- The parking brake is applied using the paddle switch located on the console.
- The park brake is automatically applied when the operator is out of the seat.

Machine Display

- While operating machine, pay attention to machine display to ensure proper temperature and fluid levels.

Tipping Angle

- Never operate the machine on an incline greater than 20°.
- Never raise the hopper on an incline greater than 10°.

Accessing Paddle

- If the paddle becomes plugged or needs cleaned, see instructions in Maintenance section to access paddle.

Sweeping Performance

The Harper Hawk HK4200 has superior performance when sweeping and collecting the following items at the listed saturation levels.

Material	Saturation Level
Grass Clippings	50%
Aeration Cores up to ½" (1.27 cm) diameter	50%
Leaves	100%
Pine Needles	100%
Pine Cones	100%
Verticut Thatch	50%
Twigs ½" (1.27 cm) x 18" (45.72 cm)	100%

For reference, the saturation levels are defined as the following: 100% - material is water logged and will not soak up any more moisture; 75% - Material feels wet still, no water running out of it; 50% - material has noticeably dried since operation was complete.

After Operation

Allow engine to run at low engine speed to properly cool before turning machine OFF.

Make sure engine, deck and hopper areas are clear of all debris.

Storage

Ensure that the deck, hopper, and door are in the down or closed position. Make sure that the machine has properly cooled and is NOT a potential fire hazard.

Maintenance

Hydraulic System

- The hydraulic system of the HK4200 is filled at the factory with Crown AW 46 hydraulic oil that has an ISO of 46.
- The HK4200 has a 3 micron, beta rated hydraulic oil filter designed for long life.
- Hydraulic reservoir capacity - 2 gal (7.6L).

The following list of hydraulic fluids are compatible and can be mixed with Crown hydraulic fluid. MIXING OTHER OILS THAT ARE NOT INCLUDED ON THIS LIST COULD CAUSE GELLING AND DAMAGE TO THE HYDRAULIC COMPONENTS. If another type of oil is desired, then the system must be completely drained and flushed first.

Appropriate replacements:

ISO 46: Recommend for running in ambient air temperatures of 32°F-110°F, and it contains a kinematic viscosity rating around 46 cSt at 40°C. (1cSt = 1mm²/s)

- Mobil DTE 25
- Mobil DTE 15M
- Amoco Rykon Premium Oil ISO 46
- Chevron Rykon Premium Oil ISO 46
- Conoco Hydroclear AW MV 46
- Exxon Univis N 46
- Pennzoil AWX MV 46
- Shell Tellus 52 M46
- Shell Tellus 52 V46
- Texaco Rando HDZ 46

Hydraulic Filter

- Monitor the needle in the filter indicator when the oil is at normal operating temperature every 100 hours.
- The filter (part no. 822044) does not need replaced until the needle is in the red portion of the gauge.
- To replace filter, twist the filter counter-clockwise. Replace with new filter by turning it clockwise until tight.

Hydraulic Fluid Replacement

- Remove the oil from the reservoir using a pump.
- Add fresh oil to MAX fill line.
- Turn on machine, raise and lower deck fully, raise and lower hopper fully, open and close door fully, run the deck for 10 seconds, drive forward and backwards for 10 seconds.
- Remove the oil from the reservoir and fill to MAX.

Hydraulic Fluid

- Keep hydraulic oil at MAX in the sight glass (RH side of tank). Check daily.
- Fill located at top of reservoir.

Grease Zerk Locations

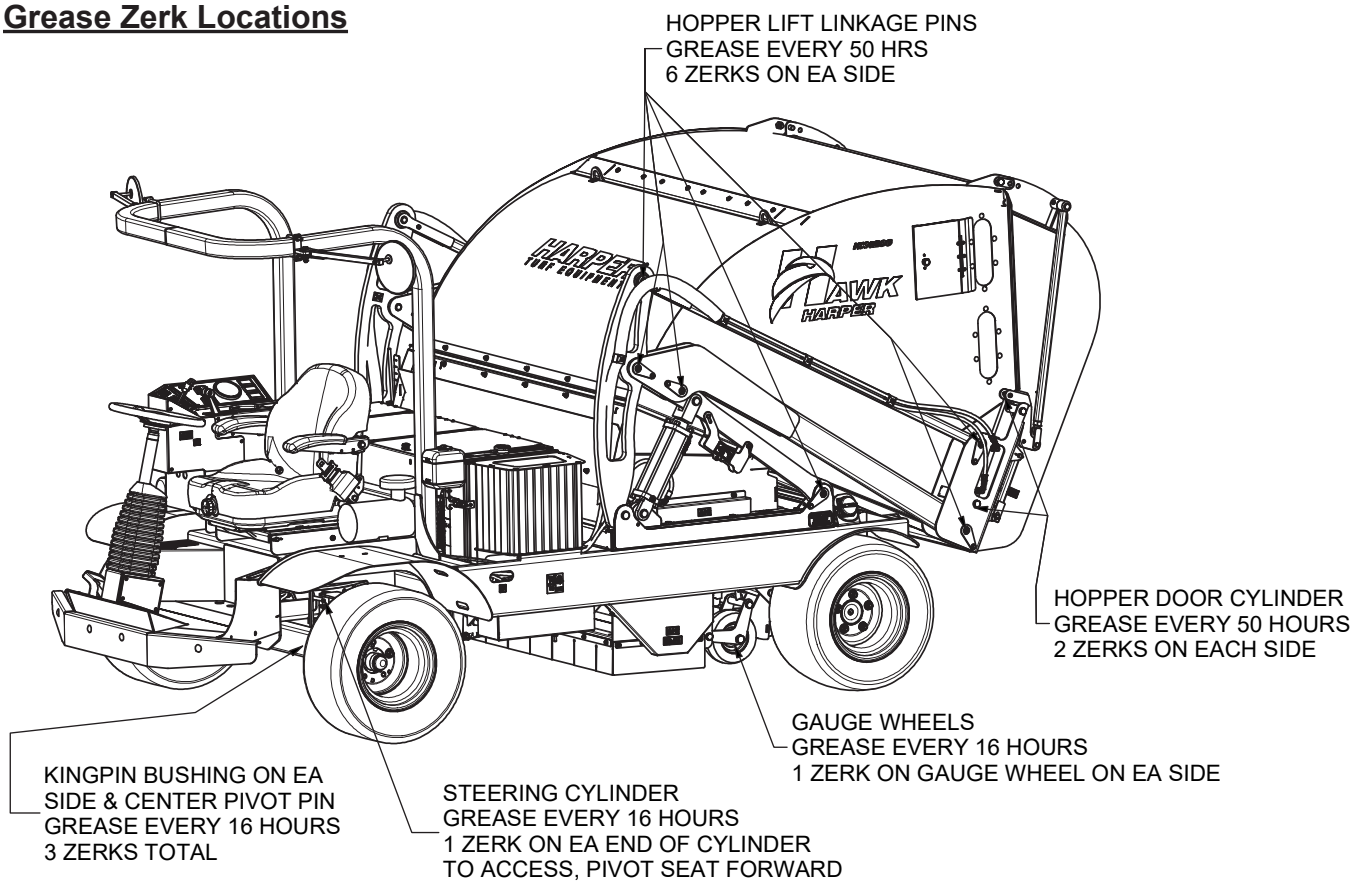

Procedure

1) Park on level ground and set park brake.
2) Turn machine OFF.
3) Apply 4-5 pumps of grease to each zerk at the noted intervals listed above.

To access steering cylinder, pivot the seat forward by releasing the spring pins located at the rear of the seat as shown in the pictures below.

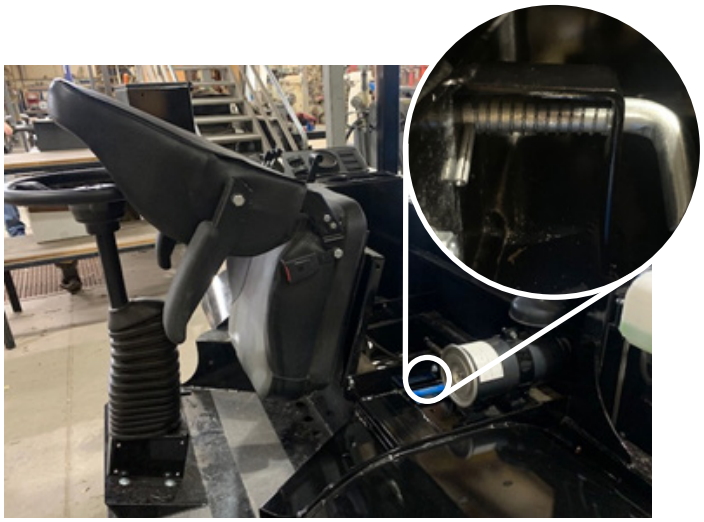

Jack Points for Wheel Maintenance

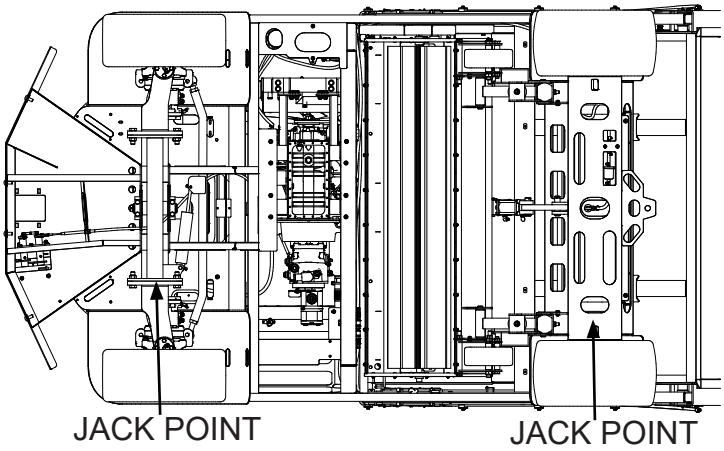

Air Cleaner

- Make sure intake is always free of debris.
- When engine is turned off, remove the wing bolt.
- Replace the air filter according to the Maintenance Schedule.

Cooling System

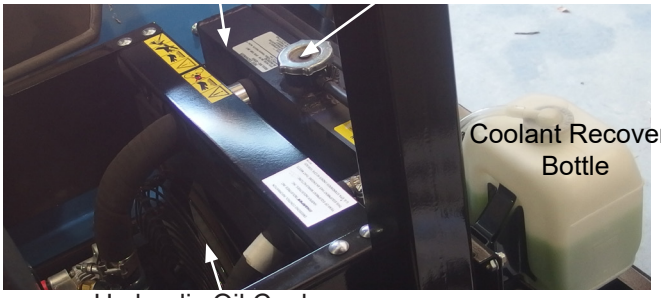

- The radiator and hydraulic oil cooler are located side by side in the same aluminum heat exchanger.
- Clear hydraulic oil cooler and radiator of debris with pressurized air daily or as needed.
- Check radiator level daily and only when engine is cool and not running.
- Remove cap (radiator fill) slowly to relieve any pressure that may be built up.
- Fill up radiator with coolant (50% water/ 50% antifreeze) until coolant is visible in neck of radiator.
- Coolant capacity - 2.25 gal (8.5 L).
- Make sure that the coolant recovery bottle has at least 1" of coolant in bottom. The presence of coolant in the recovery bottle does not mean radiator is full.
- Do NOT operate the machine if the engine temperature exceeds 230°F (110°C. Severe engine damage may occur if the machine is continuously operated above 221°F (105°C). If overheating does occur, diagnose the cooling system and ensuring proper coolant levels and proper air flow across the radiator. The high engine temperature indicator illuminates when the coolant reaches 221°F (105°C).

SAFETY WARNING!

Hot Coolant and steam from the radiator can cause severe burns. Never open the radiator cap of a hot engine.

Engine Compartment

To access the engine, open the shields located above the engine by turning the latches counterclockwise.

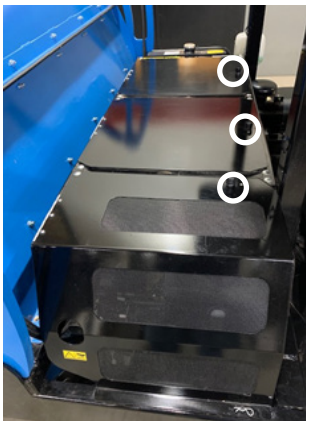

Engine Oil

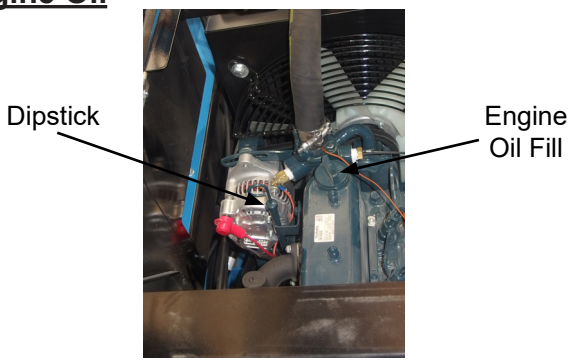

- The dipstick and engine oil fill are located on the left hand side of the engine compartment.
- The engine oil filter is located on the rear lower side of the engine and it is accessible from the left hand side of the machine.
- To access engine oil fill or dipstick, open the LH shield by turning the latch counter-clockwise.

PROCEDURE

- Check engine oil level only when engine is off.
- Keep engine oil level between the FULL and ADD marks on dipstick at all times. DO NOT OVER-FILL.

SAFETY WARNING!

Keep dipstick and oil fill cap secured tightly. Engine oil may escape through these orifices when engine is running causing severe burns.

above 25°**C (77°F)**	SAE30 or SAE10W-30 SAE15W-40
-10°**C - 25°C** **(14°F - 77°F)**	SAE10W-30 SAE15W-40
below -10°**C (14°F)**	SAE10W-30

- Filled with SAE10W-30 from the factory, 6.0 L capacity, and change after the first 50 hours. Then chance engine oil every 200 hrs.

Fuel Components

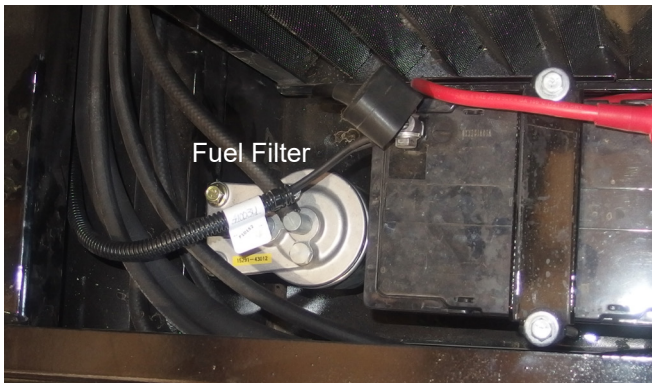

- Fuel Filter (302057) is located on the left hand side of the machine beside the radiator.
- The fuel pump, in-line fuel filter, and fuel shutoff are located below the fuel tank. These components can be accessed through the frame cutouts between the two rear tires.

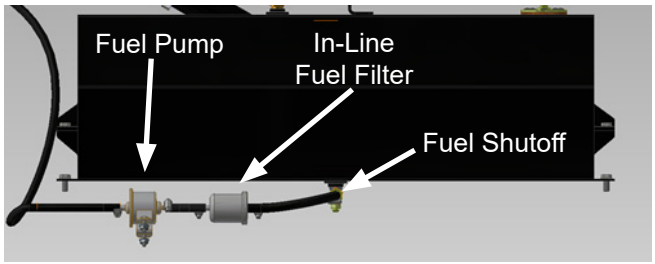

Fuse/Relay Panel

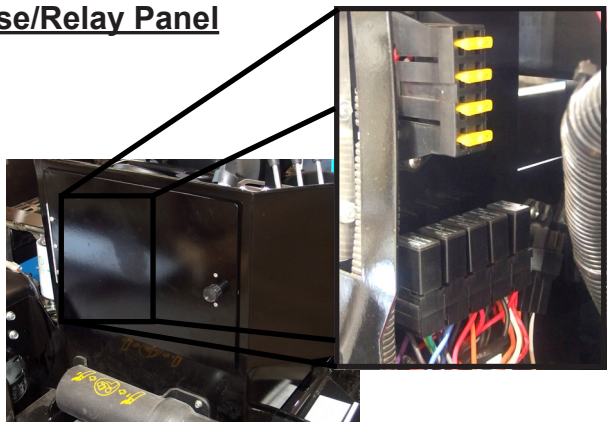

- Located under operators' console, through the access door.
- Refer to the parts section for electrical schematic and other electrical components.
- All fuses are 20 amp.

Battery

SAFETY WARNING!

Always disconnect the negative battery cable before disconnecting the positive cable. THEN connect the positive battery cable before connecting the negative cable.

- Remove radiator screen .
- Remove the battery from the battery compartment.
- Clean the top of the battery.
- Charge or replace battery as needed.
- Insert the battery into the tray in the battery compartment. Position the battery so that the terminals are to the inside.
- Attach the positive cable (red cable from the ignition switch) to the positive (+) terminal.
- Attach the negative cable (black cable from the engine block) to the negative (–) terminal of the battery.
- Replace radiator screen

Deck Maintenance/Service

Liner Inspection

- The deck assembly and deck transition assembly both include bolt-on replaceable steel wear liners.
- To access liners for inspection, raise the hopper and install safety locks on both lift cylinders.
- Inspect wear liners every 250 hours. Replace liners before it wears through. The part number for the two deck liners is 317311. When operating in sandy conditions, inspect every 100 hours.

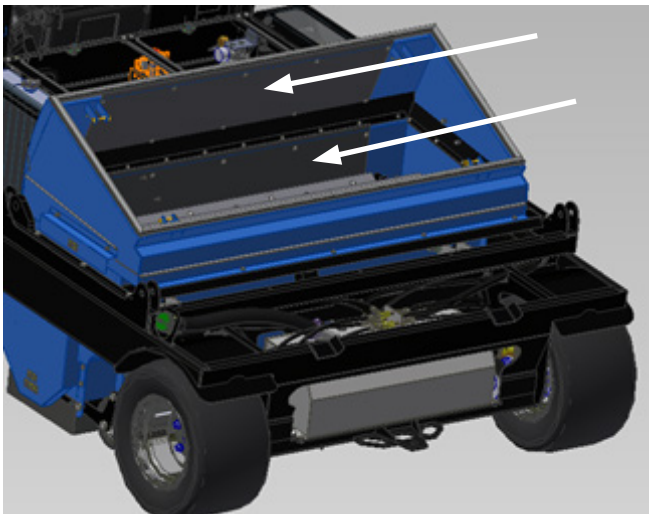

Paddle

- Accessing paddle – Ensure the machine is off. Raise the hopper and install safety locks on both lift cylinders. Remove the front two pins on the chute assembly and release the two spring pins located on the paddle shield. Then flip these two components towards the rear to gain access to the paddle rotor.

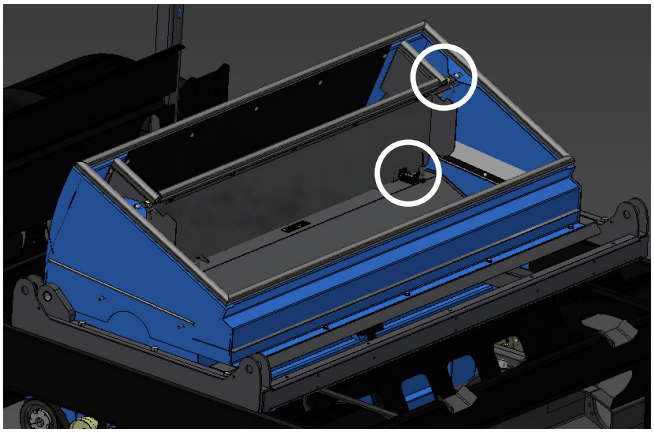

- Inspecting paddle blades – inspect the four paddle blades for significant damage (bends, cracks). Ensure the paddles are not rubbing on the deck housing evidenced by excessive deck housing wear. Replace paddles as needed.

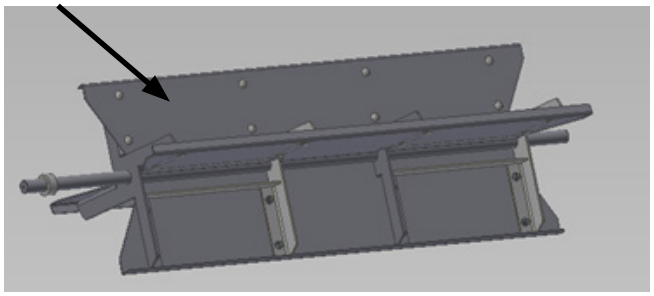

- Inspect paddle bearings – inspect the paddle bearings, located on each end of the paddle rotor, for damaged seals or excessive movement of the shaft contained by the bearing.

NOTE: The deck liner is easier to inspect and replace with the paddle shield and chute assembly folded backwards.

- Re-install all shields and parts removed before operating machine.

Brush

- The brush is approximately 12” (30cm) in diameter when it is new. As it wears, the overall diameter will be reduced. Replace the brush when the overall diameter is less than 10” or the sweeping performance is reduced.

Replacing brush

- Remove the shield located on the LH side of the deck to access the chain drive. Remove the rear two bolts and loosen the front two bolts.

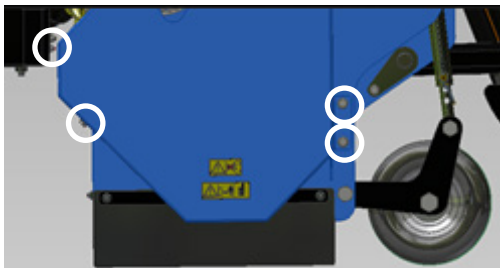

- Loosen the chain by removing the two nuts that secure the idler spring. Then remove the chain from the sprockets.
- Remove bolt that secures the brush sprocket and then remove sprocket.
- Remove side skirts and retainers on each side.

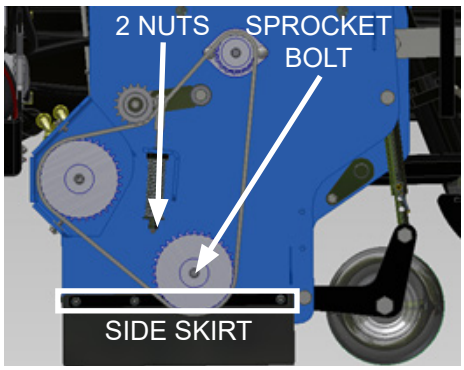

- Remove bolts attaching bearings to the deck and lower brush assembly down from the deck. Replace brush halves.

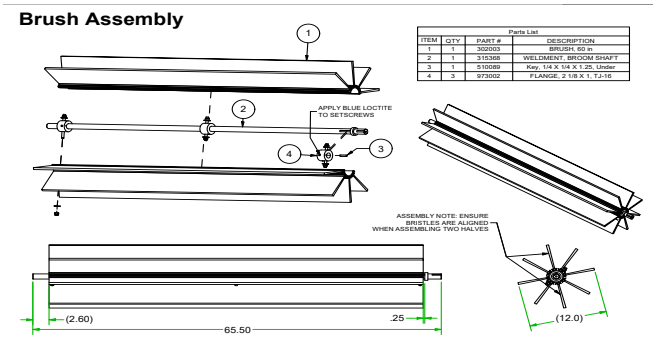

- Re-install all parts that were removed See next section for instructions on how to properly tighten the chain.

Chain Drive

- Chain Drive Access - remove the shield located on the LH side of the deck to access the chain drive. Remove the rear two bolts and loosen the front two bolts.

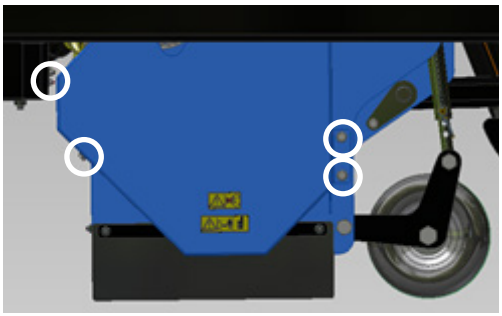

- Tightening chain – position roller chain on sprockets as shown below. Tighten hex nut to compress the idler spring until the flat washer contacts the black nylon collar located on the inside of the idler spring. Tighten jam nut to lock in place.

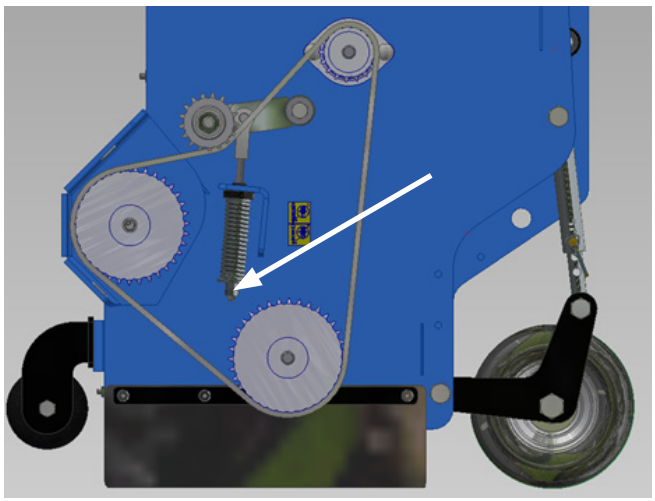

- Chain – inspect the chain every 250 hours and replace the chain when chain elongation has reached 3%, chain has become damaged, or im proper flex of chain is found.
- Checking for elongation – with the chain set at the proper tension, count 12 pins on the roller chain, and measure the center to center distance between the first and last pin. When new, this measurement is 5.50” (13.97 cm). When this measurement is greater than 5.66” (14.37 cm), the chain should be replaced.

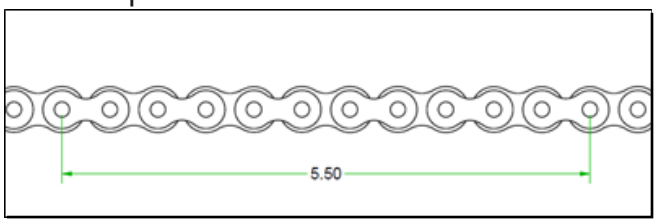

- Sprockets – inspect the sprockets every 250 hours and replace the sprockets when the teeth become sharp and pointed. See parts manual for sprocket part numbers.

Hopper Maintenance/Service

Liner Inspection

- The hopper assembly includes a bolt-on replaceable UHMW plastic liner.
- To access the liner for inspection, open the hopper door and install the hopper door safety lock.
- Inspect wear liner every 250 hours. Replace liner before it wears through to the hopper sheet metal. The part number for the hopper liner is 3021210. When operating in sandy conditions, inspect every 100 hours.

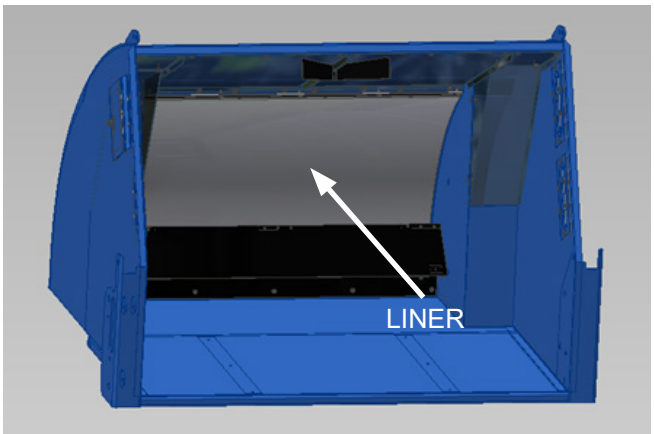

Return Air Screens

- Inspect return air screens located inside the hopper to ensure that screens are clear of debris to allow proper return air flow. Clear debris as needed.

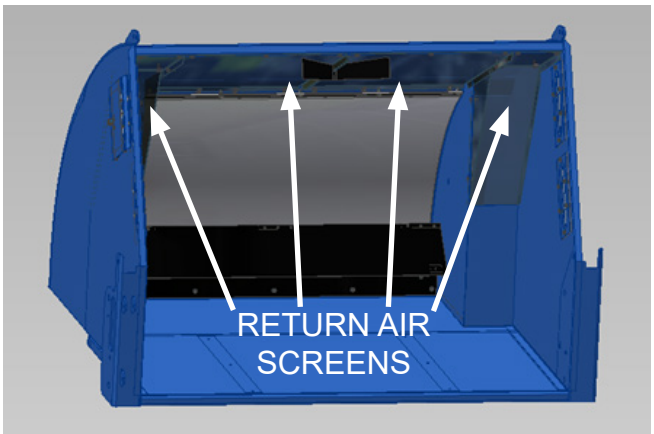

Tow Procedure

To move the machine without the engine running, the park brake must be released, **and** the bypass valve must be opened on the propulsion pump.

Park Brake Release

- Each wheel motor contains a park brake that is mechanically applied and hydraulically released. When the engine is OFF the park brakes are applied to both wheel motors.

PRECAUTION

Towing or pushing the unit with the park brakes applied may cause serious damage to internal brake parts.

- The park brakes can be released by using the brake release tools to mechanically release the brake located on each wheel motor. To accomplish this, follow the steps below.

Procedure

- Locate the brake release tools located on the RH side of the machine near the manual holder. Remove the tools from the machine by removing the two hex nuts.

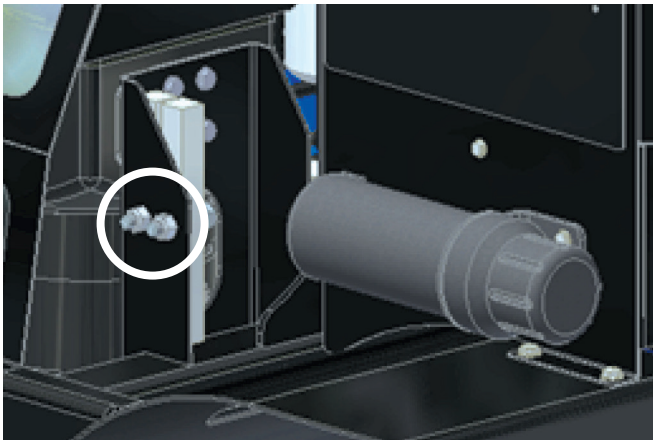

- Remove the plastic plug from the center of the park brake housing.

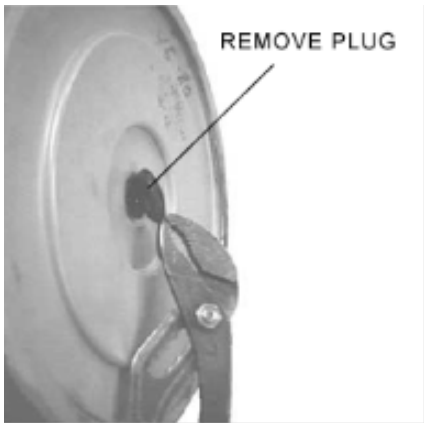

- Install brake release tool by placing on the brake housing and tightening the bolt into the piston.

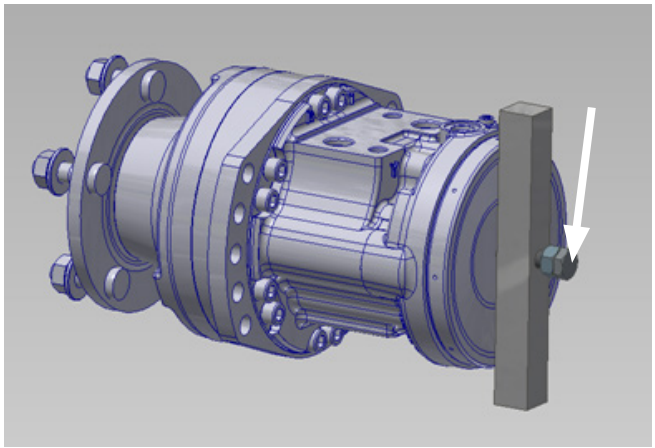

- Tighten the nut until the motor shaft turns freely.

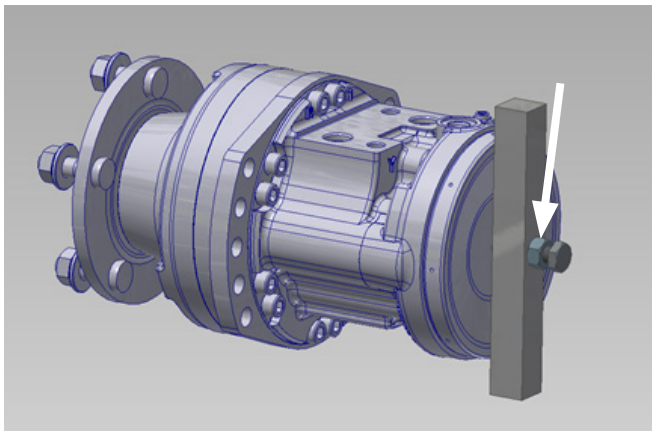

- Brakes are now released, proceed to next section to open the by-pass valve.

Opening the By-Pass Valve

- The by-pass valve is located on the bottom side of the propulsion pump that is directly coupled to the engine. The valve can be accessed below the engine compartment.
- The by-pass connects the ports A-B and must be used only in case of emergency and only for moving machine short distances.

PRECAUTION

NOT A TOW VALVE! By-pass valve is intended for moving a machine for very short distances at very slow speeds.

- To open, turn by-pass valve counter-clockwise (CCW) two full turns using a 17 mm wrench.

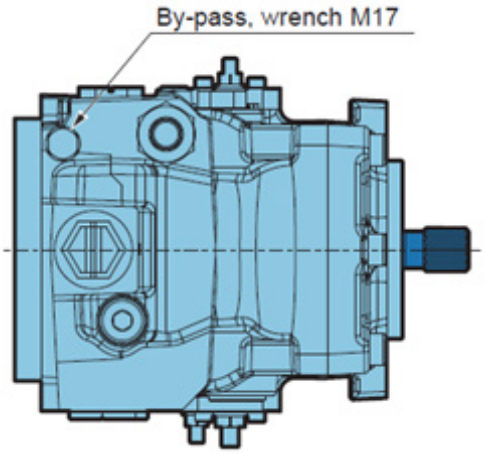

PRECAUTION

To avoid leakage, do not exceed two CCW truns of the screw.

- After moving machine is complete, close the by-pass by turning valve CW, and then follow the brake release procedure in opposite order to remove brake release tools.

Transporting Machine

- Use at least 5/16” Grade 70 Transport Chain or equivalent strength to tie down during transport.
- Tie downs should be secured as shown when transporting.
- All 4 of the tie down locations are identified with this decal. One on each side and 2 on the rear of the machine.

- When transporting on a truck or trailer, ensure that all moving parts are in the down or closed position.
- When transporting a machine with a canopy installed, load the machine with the hopper facing forward.

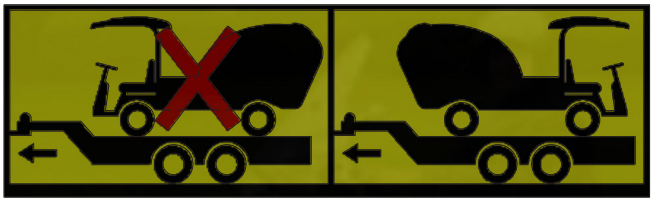

Serial Number ID

- **Machine Serial Number** - Located on the LH side of the operator seat.

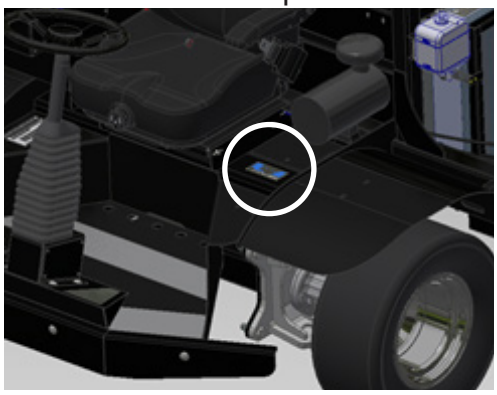

- **Engine Serial Numbers** - Engine model and serial number are stamped in the engine block on the starter side of the engine. Serial number decal is located on top of the engine.

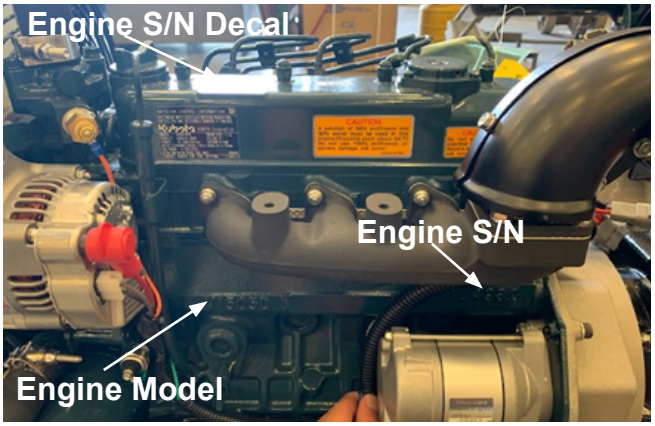

- **Propulsion Pump Serial Numbers** - On front side of the propulsion pump.

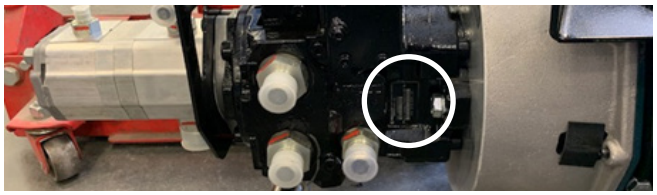

- **Rear Wheel Motor Serial Numbers** - Located on the bottom side of the wheel motor, and it can be viewed through the cutout on the frame.

Standard Torque Chart

PRECAUTION

Refer to the Standard Torque Chart whenever bolts, nuts or screws are tightened.

PRECAUTIONS

- When tightening two or more fasteners on the same part, DO NOT tighten the fasteners completely one at a time. Tighten in sequence to one-third of torque value, then to two-thirds of torque value, then tighten to full value.
- Specific torque specs are listed next to their images in the Parts Manual.

U.S. BOLT TORQUE SPECIFICATIONS

Torque in foot-pounds

Diameter	Thread per inch	SAE 2	SAE 5	SAE 8	SHCS
1/4	20	4	8	12	14
1/4	28	6	10	14	16
5/16	18	9	17	25	29
5/16	24	12	19	29	33
3/8	16	16	30	45	49
3/8	24	22	35	50	54
7/16	14	24	50	70	76
7/16	20	34	55	80	85
1/2	13	38	75	110	113
1/2	20	52	90	120	126
9/16	12	52	110	150	163
9/16	18	71	120	170	181
5/8	11	98	150	220	230
5/8	18	115	180	240	255
3/4	10	157	260	380	400
3/4	16	180	300	420	440
7/8	9	210	430	600	640
7/8	14	230	470	660	700
1	8	320	640	900	980
1	12	350	710	990	1060

Baseline torque is calculated for a non-lubricated, un-plated bolt.

BOLT TORQUE FACTORS

LUBRICANT OR PLATING	TORQUE CHANGES
Oil	Reduce torque 15% to 25%
Chrome plating	No change
Cadmium plating	Reduce torque 25%
Zinc plating	Reduce torque 15%

Service Parts

Filters	Part #
Engine Air Filter	802064
Engine Oil Filter	302058
Fuel Filter (Cannister)	302057
Fuel Filter (In-line)	302103
Belts	
Engine Fan Belt	802063
Wheels and Tires	
Front Wheel	302125
Front Tire	302127
Front Wheel/Tire Assembly	305147
Rear Wheel	302126
Rear Tire	302128
Rear Wheel/Tire Assembly	305146
Replaceable Wear Items	
Deck & Transistion Liner	317311
Paddle Blades 5.26”	317380
**Paddle Blades 8.36”*	*317180*
Replacement Brush	302003
Hopper Liner	302121

For all other service parts, use parts manual to identify part numbers.

****Used on 2020 and older models***

Maintenance Schedule

Daily or Before Starting the Engine

Check Engine Oil Level..... SAE 10W30 or 15W40

- (See Maintenance section for details)

- ☐ Check Hydraulic Oil Level..... Crown AW46
  - (See Maintenance section for details)
- ☐ Check Fuel Level..... Clean #2 Diesel Fuel
- ☐ Check Engine Coolant Level..... 50% anti-freeze, 50% water
- ☐ Visually Inspect..... Fan belt, bolts, fittings, hoses (fluid leaks, or any damaged parts
- ☐ Check Radiator & Oil Cooler..... Clean off debris as needed
- ☐ Check Engine Screens……..…..... Clear debris as needed to ensure proper air flow
- ☐ Check Air Cleaner Intake..... Clear debris as needed
- ☐ Grease..... As needed; see Maintenance section for locations and intervals
- ☐ Check Drive Tires..... Visually inspect tires to ensure proper inflation & no damage

Every 50 Hours

- ☐ Change Engine Oil & Filter..... After initial 50 hours, change engine oil
  - (every 200, thereafter)
- ☐ Change Inline Fuel Filter..... After initial 50 hours, change filter
  - (P/N: 302103, every 200 thereafter)
- ☐ Check Tire Pressure..... Inflate all tires to 20 psi (138 kPa)
- ☐ Check of Fuel Pipes & Clamps..... See Kubota Manual for details
- ☐ Check Lug nuts..... Torque to 147 ft-lbs (199 Nm)

Every 100 Hours

- ☐ Check Engine Air Filter..... Clean or replace as needed (P/N: 802064)
- ☐ Check Fan Belt Tightness..... Tighten as needed
- ☐ Check Hydraulic Oil Filter..... Replace when needed (P/N: 822044)

Every 200 Hours

- ☐ Change Engine Oil..... SAE 10W30 or 15W40
  - (See engine manual)
- ☐ Change Engine Oil Filter..... P/N: 302058
- ☐ Check Intake Air Lines..... Clear debris as needed
- ☐ Replace In-line Fuel Filter……..... P/N: 302103
- ☐ Check Radiator Hoses & Clamps..... Repair or replace as necessary

Every 250 Hours

- ◻ Inspect deck transition wear liners……..... Replace as needed (P/N: 317311)
- ◻ Inspect deck chain drive and sprockets……..... Tighten chain as needed; Replace parts as needed
- ◻ Inspect brush……..... Replace as needed (P/N: 302003)
- ◻ Inspect hopper liner……... Replace as needed (P/N: 302121)
- ◻ Inspect hopper return air screens……..…..... Clear debris as needed.

Every Year

- ◻ Replace Engine Air Filter..... P/N: 802064
- ◻ Check Hydraulic Oil Condition..... Crown AW46
  - (See Maintenance section for details)
- ◻ Check Battery..... Clean terminals if necessary

Every 500 Hours

- ◻ Replace Engine Fan Belt..... P/N: 802063
- ◻ Replace Cannister Fuel Filter..... P/N: 302057

Every 1500 Hours

- ◻ Check fuel injection nozzle injection pressure ...See Kubota Manual
- ◻ Change Hydraulic Oil..... Crown AW46
  - (See Maintenance section for details)

Every 3000 Hours

- ◻ Check Fuel Injection Pump

Every Two Years

- ◻ Change Engine Coolant..... 50% anti-freeze, 50% water
- ◻ Replace Battery..... P/N: 832011
- ◻ Replace radiator hoses and clamp bands..... See parts manual
- ◻ Replace fuel hoses and clamp bands..... See parts manual
- ◻ Replace air intake hose..... See parts manual

NOTES

Harper Industries, Inc.
151 E. Highway 160
Harper, KS 67058

Telephone: 620-896-7381
Toll-Free: 800-835-1042
Fax: 620-896-7129

Website: www.harperindustries.com

E-mail: info@harperindustries.com