HK 4200

Serial Number: 21A01-22A09
Part # 301015

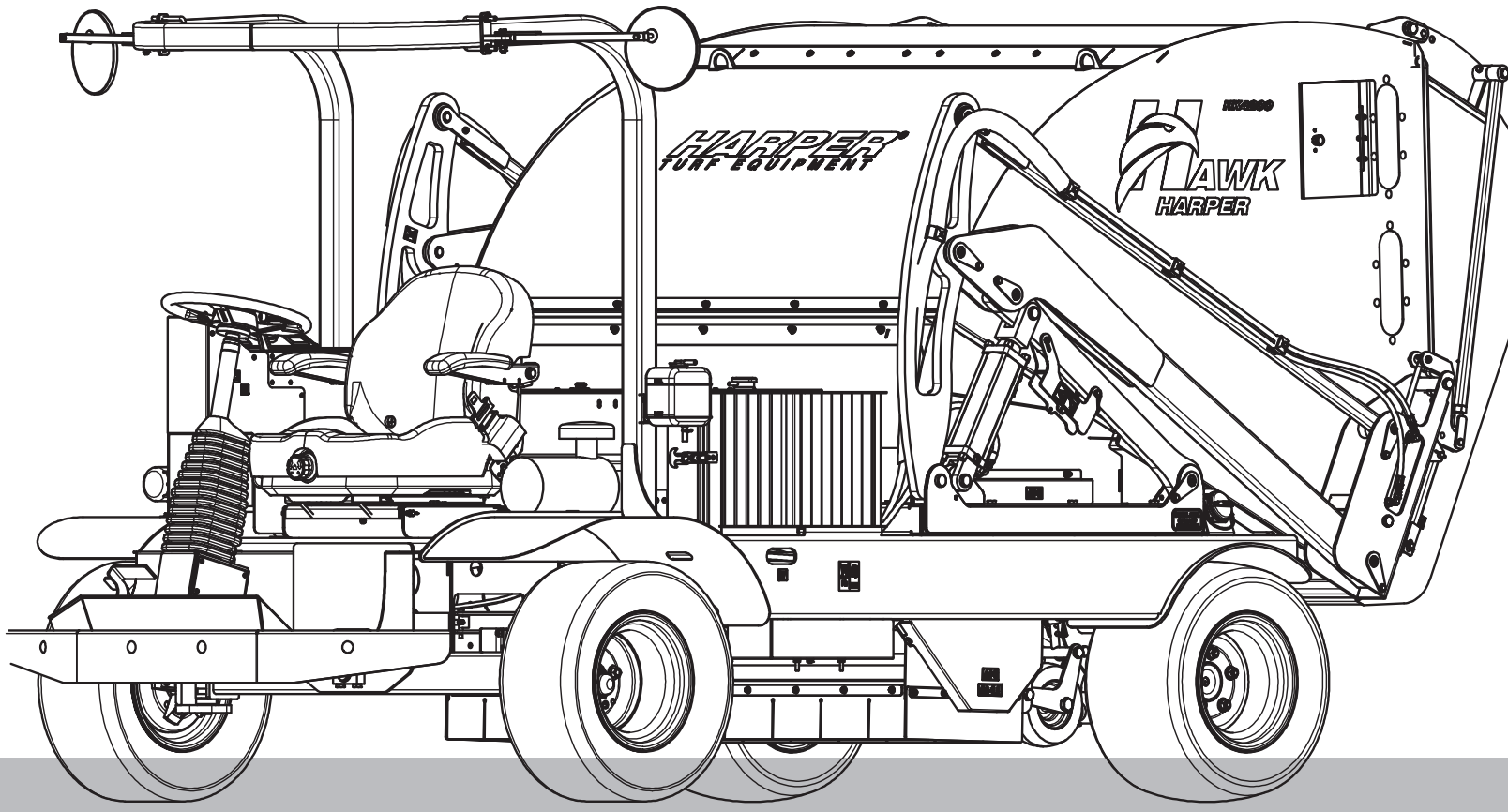

HARPER HAWK PARTS MANUAL

3-2022

HARPER INDUSTRIES INC

Thank you for purchasing a Harper Hawk.

As with all Harper products, the Harper Hawk has been developed through tough design and testing procedures to produce a top-quality machine. This manual gives assembly, operating, and service information for the model HK4200 Sweeper. Please read and understand all instructional material included with the Sweeper or its components before assembling and operating the equipment.

A Sweeper can present hazards to an operator who follows unsafe procedures in either the operation or maintenance of the unit. Therefore, **SAFETY WARNINGS** are presented at certain locations in the text.

THIS SYMBOL: **SAFETY WARNING!**

MEANING: Failure to understand and obey this warning may result in injury to you or others. Whenever this symbol is used, please pay very close attention to the information presented, and make sure you fully understand. If you do not, contact your dealer or Harper Industries, Inc. for clarification.

SAFETY WARNING!

ALL SHIELDS AND GUARDS MUST BE IN PLACE FOR PROPER AND SAFE OPERATION OF THIS EQUIPMENT. WHERE THEY ARE SHOWN REMOVED IN THIS MANUAL, IT IS FOR PURPOSES OF ILLUSTRATION AND INSTRUCTION ONLY. DO NOT OPERATE THIS EQUIPMENT UNLESS ALL SHIELDS AND GUARDS ARE IN PLACE.

WARNING: Breathing diesel engine exhaust exposes you to chemicals known to the State of California to cause cancer and birth defects or other reproductive harm.

- Always start and operate the engine in a well-ventilated area.
- If in an enclosed area, vent the exhaust to the outside.
- Do not modify or tamper with the exhaust system.
- Do not idle the engine except as necessary.

For more information go to www.P65warnings.ca.gov/diesel

Harper Industries, Inc. is continually striving to improve the design and performance of its products. We reserve the right to make changes in specifications and design without thereby incurring any obligation relative to previously manufactured products.

© 2022 Harper Industries, Inc.
The Harper name is a registered trademark of Harper Industries, Inc. All other brand and product names are trademarks or registered trademarks of their respective companies.

LIMITED WARRANTY

Harper Industries, Inc. (HII) warrants to each purchaser of a new Harper Hawk from an authorized dealer or representative, that such equipment is free of manufacturer's defects in workmanship and materials which appear while in normal service for a period of ONE YEAR commencing with delivery to the original user.

The obligation of HII under this warranty is expressly limited, at our option, to replacement or repair at a service facility designated by Harper Industries or at the manufacturing plant in Harper, KS. A part will be replaced after inspection discloses it to have been defective. This warranty does not apply to defects caused by damage or unreasonable use (including failure to provide reasonable and necessary maintenance, or by performing functions without genuine Harper Turf Sweeper accessories) while in the possession of the consumer.

Warranty is limited to parts, labor and ground freight delivery of replacement parts. HII shall not be liable for the consequential damages of any kind, including but not limited to consequential labor costs or transportation charges in connection with replacement or repair of defective parts.

This warranty does not apply to parts subjected to misuse, abuse, alteration, improper or inadequate maintenance, or normal wear (including belts, battery, chains, filters, knives, brush and broom).

Engines are not covered under this warranty. Refer to manufacturer's warranty for specific warranty information. Harper Industries, its agents or representatives, make or imply no other warranties.

Harper Industries makes no warranty with respect to trade accessories. They are subject to the warranties of their respective manufacturers.

ANY IMPLIED OR STATUTORY WARRANTIES, INCLUDING ANY WARRANTY OR MERCHANTABILITY OR FITNESS FOR A PARTICULAR PURPOSE, ARE EXPRESSLY LIMITED TO THE DURATION OF THIS WRITTEN WARRANTY. HII makes no other express warranty, nor is anyone authorized to make any on behalf of HII.

For further information please contact your nearest Harper Turf Sweeper dealer.

RECORDS

Date of Purchase _____ / _____ / _____

Dealer's Name _____

Dealer's Phone _____

Serial Number Machine _____

Serial Number Engine _____

Table of Contents

PARTS SECTION
Table of Contents
Wheel, Motor, and Axle Installation
- Wheel Motor & Axle Installation..... 1.1
- Front Axle Installation..... 1.2
- Wheel Motor Installation..... 1.3
- Edge Trim Placement..... 1.4

Engine Assembly & Installation
- Engine Assembly..... 2.1
- Hydraulic Pump Assembly..... 2.2
- Radiator Screen Assembly..... 2.3
- Engine Installation..... 2.4

Fuel Tank Installation
- Fuel Tank Installation..... 3.1

Propulsion Hydraulics
- Propulsion Hydraulic Installation..... 4.1
- Valve Assemblies..... 4.2
- Tank, Filter, & Valve Installation..... 4.3
- Propulsion Suction & Drain Plumbing..... 4.4
- Rear Wheel Motor Plumbing..... 4.5
- Proplusion Pump Plumbing..... 4.6
- Sweeper Propulsion Schematic..... 4.7

Machine Hydraulics
- Machine Hydraulic Installation..... 5.1
- Valve Assemblies..... 5.2
- Valve Installation..... 5.3
- Deck Motor Plumbing..... 5.4
- Steering Plumbing..... 5.5
- Three Spool Valve Plumbing..... 5.6
- Deck Lift Plumbing..... 5.7
- Hopper Lift Plumbing..... 5.8
- Hopper Door Plumbing..... 5.9
- Sweeper Machine Hydraulic Schematic..... 5.10

Deck Installation
- Paddle Assembly..... 6.1
- Brush Assembly..... 6.2
- Deck Assembly..... 6.3
- Broom & Paddle Installation..... 6.4
- Gauge Wheel & Lower Skirt Installation..... 6.5
- Hyd. Motor, Scalp Wheels, L Skirt Install..... 6.6
- Upper Deck Seal & Paddle Shield Install..... 6.7
- Chain Drive Assembly..... 6.8
- Deck Transition Assembly..... 6.9
- Chute Assembly..... 6.10
- Deck Linkage Installation..... 6.11
- Hopper Transition & Hopper Mount Install..... 6.12

Hopper Installation
- Hopper Shield Assembly..... 7.1
- Hopper Assembly..... 7.2
- Window & Door Installation..... 7.3
- Line & Shield Installation..... 7.4
- Screen Assembly & Install..... 7.5
- Hopper Installation..... 7.6
- Lift Arm Assembly..... 7.7
- Hopper Install..... 7.8
- Door & Arm Install..... 7.9
- Hopper Cylinder Plumbing..... 7.10

Operator Station and Electrical Assemblies
- Operator Station & Electrical Assembly..... 8.1
- Deck Switch Assembly..... 8.2
- Instrument Panel Assembly..... 8.2
- Console Assembly..... 8.3
- Foot Pedal Assembly..... 8.4
- Seat Assembly..... 8.5
- Electrical Harnesses..... 8.6

Mirror, Tire, and Shield Assemblies
- Mirror, Tire, & Shield Installation..... 9.1
- Bumper, Deck Shields, & Wheel/Tire Assy..... 9.2
- Mirror Assembly..... 9.3
- Engine Shield Assembly..... 9.4

Finishing and Decals
- Decal Installation..... 10.1
- RH Decal Installation..... 10.2
- LH Decal Installation..... 10.3
- Hopper Decal Installation..... 10.4

Options
- Canopy..... 11.1
- Work Light..... 11.2
- Beacon..... 11.3
- Right Curb Brush..... 11.4
- Left Curb Brush..... 11.5
- Dual Curb Brush..... 11.6

WHEEL MOTOR & AXLE INSTALLATION

Parts List			
ITEM	QTY	PART #	DESCRIPTION
1	7'	100365	MOLDING - EDGE GUARD, 5/32
2	2	102043	BEARING - THRUST, 1.0 ID X 5/8 T
3	1	102136	Clevis Pin, 5/8 x 1.5
4	4	110129	BOLT, 1/2-13 X 2.75 HEX
5	20	110244	BOLT, 1/2-13 X 1.5 SHCS
6	2	110425	BOLT, 3/8-16 X 1.25
7	2	110444	BOLT, 5/16-18 X 0.75, WIZ FLANGE
8	1	110600	NUT, 5/16-18, UNITORQUE LOCK
9	4	110610	NUT, 1/2-13
10	1	110665	WASHER, 5/16" FLAT STANDARD
11	24	110666	WASHER, 1/2" LOCK
12	4	110826	NUT, 3/8-16 GR 5
13	1	110862	WASHER - THRUST, IGUS MTI-24
14	2	110888	SNAP RING - EXT, 1-1/2
15	1	111190	BOLT, 3/8 X 2.0 SHOULDER SHCS
16	11'	112084	Rubber Seal, .625 X .25
17	2	120027	ADAPTER, 4MB-4MJ 45
18	6	120249	ADAPTER, 4MJ-6MB
19	4	120446	ADAPTER, 8MJ-10MB
20	1	200029	COTTER PIN, 5/32 X 1
21	2	302129	NUT, 7/8-18 HEX JAM GR 2
22	1	305109	ASSY, LH SPINDLE & HUB
23	1	305110	ASSY, RH SPINDLE & HUB
24	2	311459	KEEPER - AXLE PIVOT, LOWER
25	2	312032	Tie Rod End, RH
26	1	315350	FRAME WELDMENT, SWEEPER
27	1	315394	WELDMENT, FRONT AXLE, 2WD
28	2	315397	WELDMENT, 2WD KINGPIN
29	1	315398	WELDMENT, ROUND STEERING LINK
30	1	317174	PIN, FRONT AXLE
31	1	323010	CYLINDER - STEERING, 1-3/4 X 6
32	1	323057	MOTOR, LH REAR WHEEL, 24.3 CI, 2-SPD
33	1	323058	MOTOR, RH REAR WHEEL, 24.3 CI, 2-SPD
34	2	500230	GREASE ZERK, 1/4-28 90deg
35	3	510174	GREASE ZERK, 1/4-28 ST

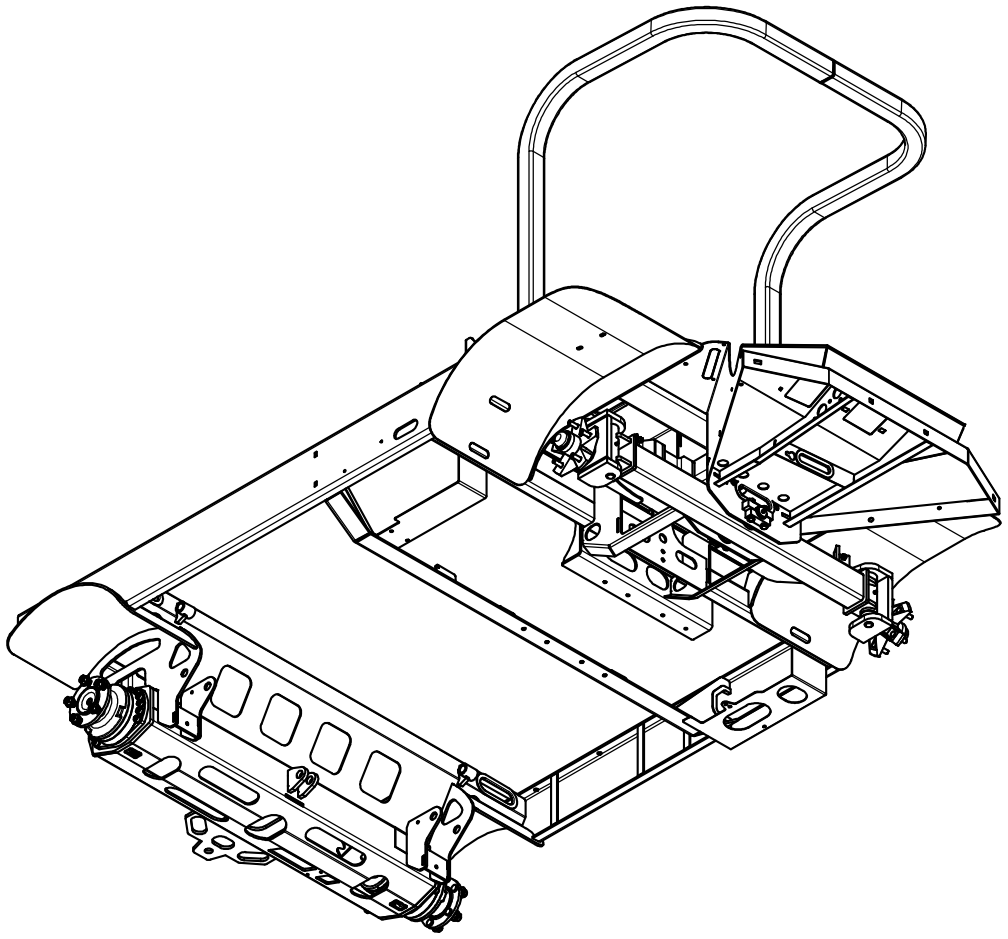

10-27-2021

FRONT AXLE INSTALLATION

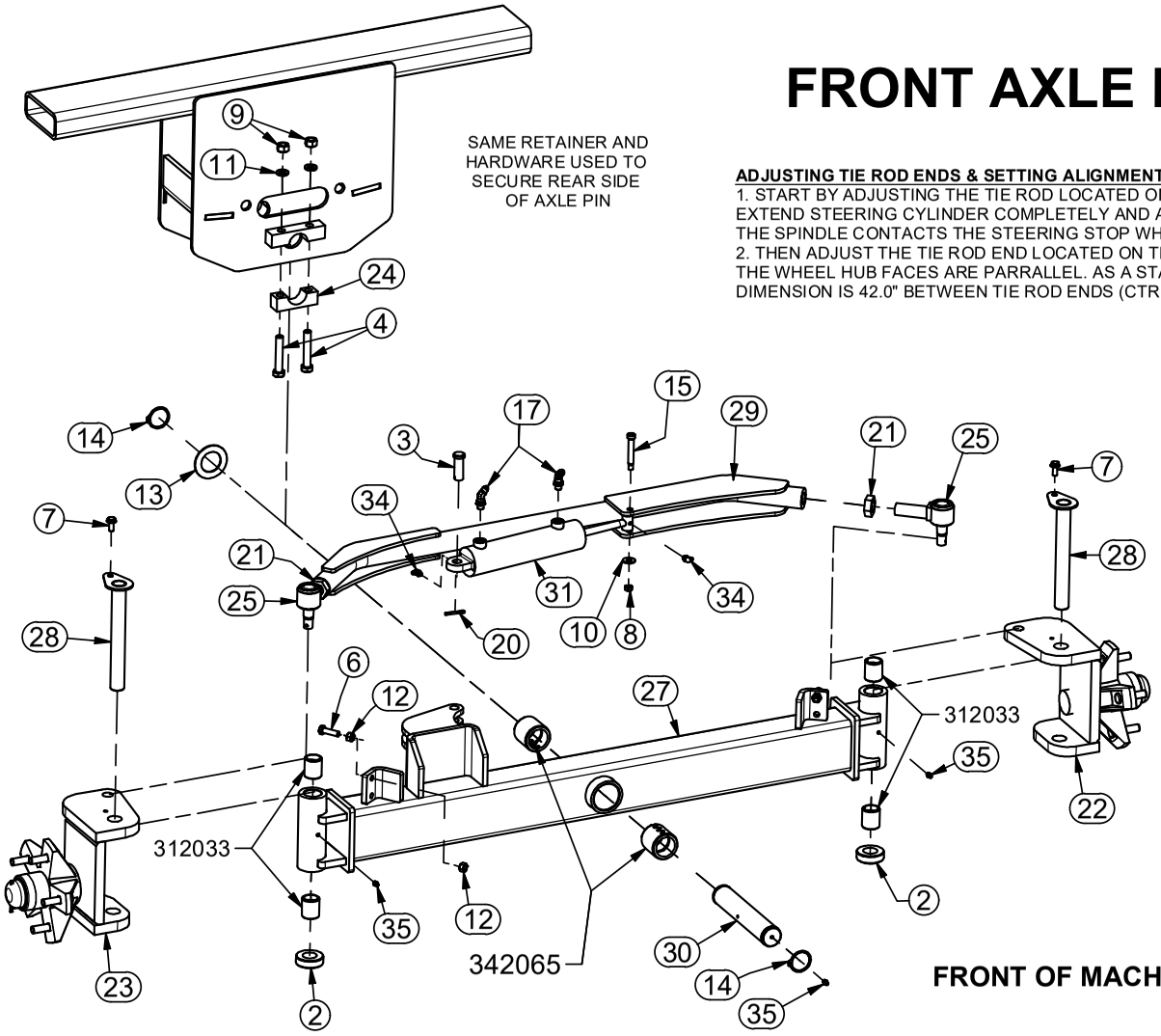

ADJUSTING TIE ROD ENDS & SETTING ALIGNMENT

1. START BY ADJUSTING THE TIE ROD LOCATED ON THE RH SIDE OF THE MACHINE. EXTEND STEERING CYLINDER COMPLETELY AND ADJUST THE RH TIE ROD SO THAT THE SPINDLE CONTACTS THE STEERING STOP WHEN THE CYLINDER IS FULLY EXTENDED.
2. THEN ADJUST THE TIE ROD END LOCATED ON THE LH SIDE OF THE MACHINE SO THAT THE WHEEL HUB FACES ARE PARRALLEL. AS A STARTING POINT, THE APPROXIMATE DIMENSION IS 42.0" BETWEEN TIE ROD ENDS (CTR TO CTR).

Hub Service Parts		
PART #	QTY	DESCRIPTION
342068	1	HUB KIT (INCLUDES BEARINGS)
312001	1	GREASE CAP
312002	1	GREASE SEAL
312003	5	STUD, 1/2 - 20 NF
312005	1	OUTER RACE, OD 1.980
312006	1	OUTER BEARING, ID 1.063
312007	1	INNER RACE, OD 2.362
312008	1	INNER BEARING, ID 1.378
312038	1	HUB (ONLY), 5 ON 5-1/2
310261	1	NUT, CASTLE 1-14
312009	1	WASHER, FLAT 1.0"
510993	1	COTTER PIN, 5/32 X 2

STEERING STOP INSTALLATION
- INSTALL AS SHOWN BELOW

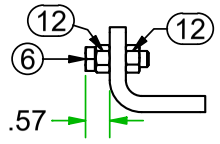

STEERING CYLINDER ADAPTER & ZERK ORIENTATION

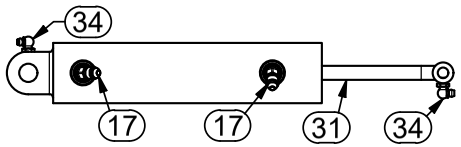

10-27-2021

WHEEL MOTOR INSTALLATION

LH Wheel Motor:

Model Code: MSE02-2-***G***2A-F03-1120-Y8JM

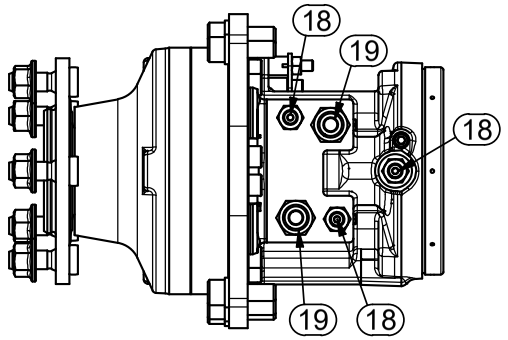

Parts List			
ITEM	QTY	PART #	DESCRIPTION
5	20	110244	BOLT, 1/2-13 X 1.5 SHCS
11	24	110666	WASHER, 1/2" LOCK
18	6	120249	ADAPTER, 4MJ-6MB
19	4	120446	ADAPTER, 8MJ-10MB
32	1	323057	MOTOR, LH REAR WHEEL, 24.3 CI, 2-SPD
33	1	323058	MOTOR, RH REAR WHEEL, 24.3 CI, 2-SPD
22	1	305109	ASSY, LH SPINDLE & HUB
23	1	305110	ASSY, RH SPINDLE & HUB

RH Wheel Motor:

Model Code: MSE02-2-***D***2A-F03-1120-Y8JM

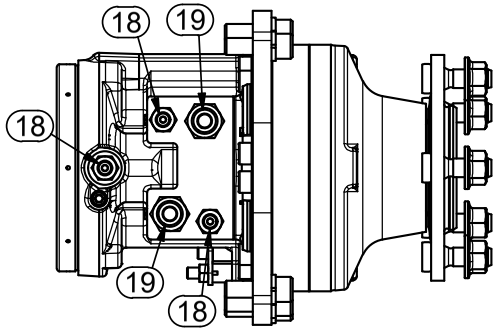

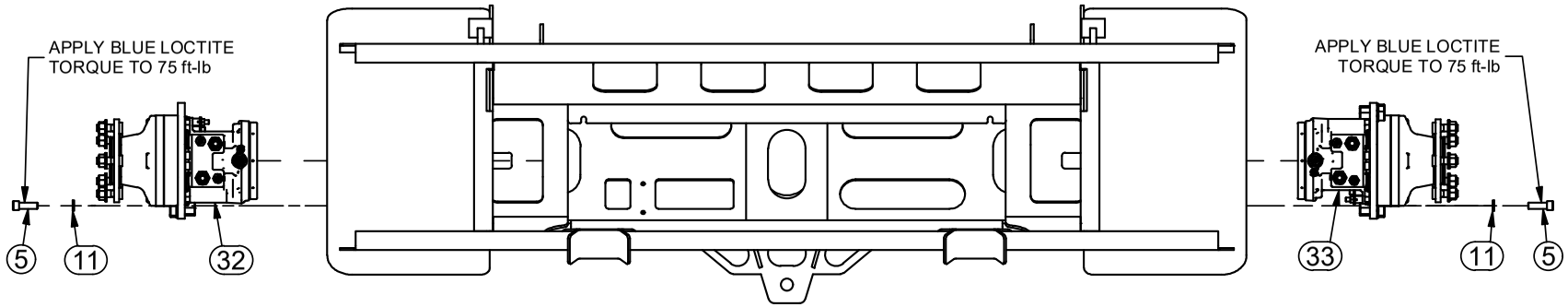

10-27-2021

305105	REV: A

EDGE TRIM PLACEMENT

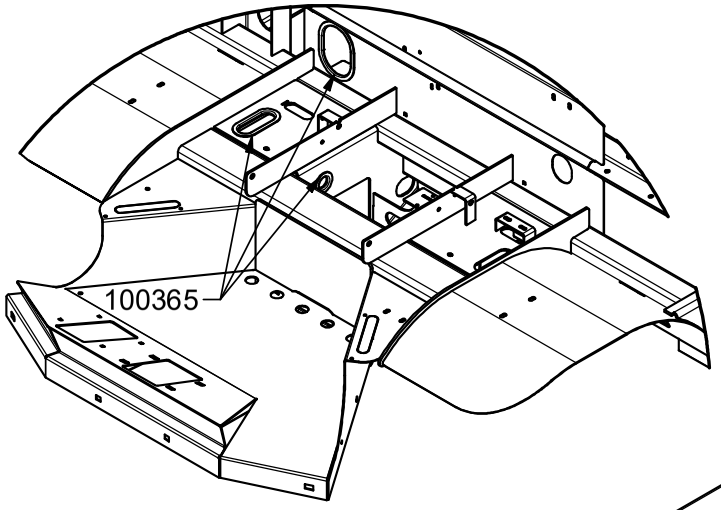

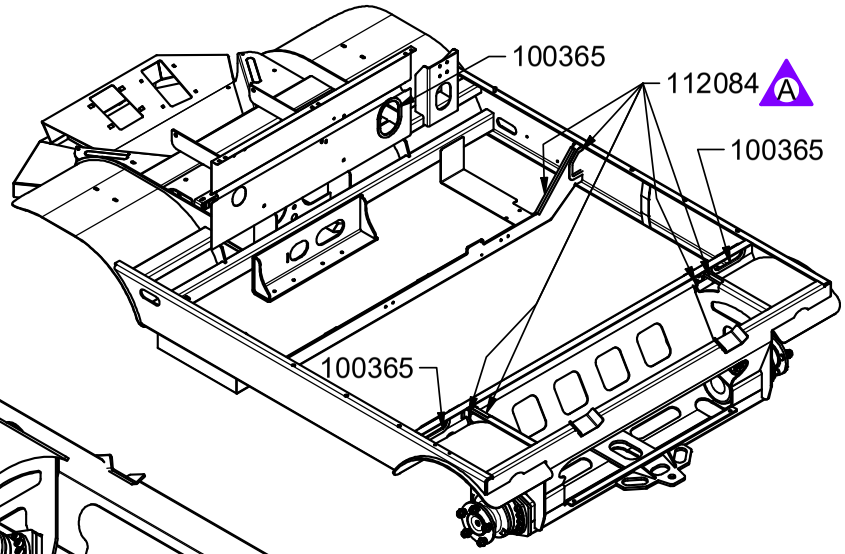

NOTES: APPLY EDGE TRIM TO ALL OVALS SHOWN ON THIS PAGE.
- 1/4" MATERIAL USES 112084 TRIM
- ALL OTHER MATL USES 100365 TRIM

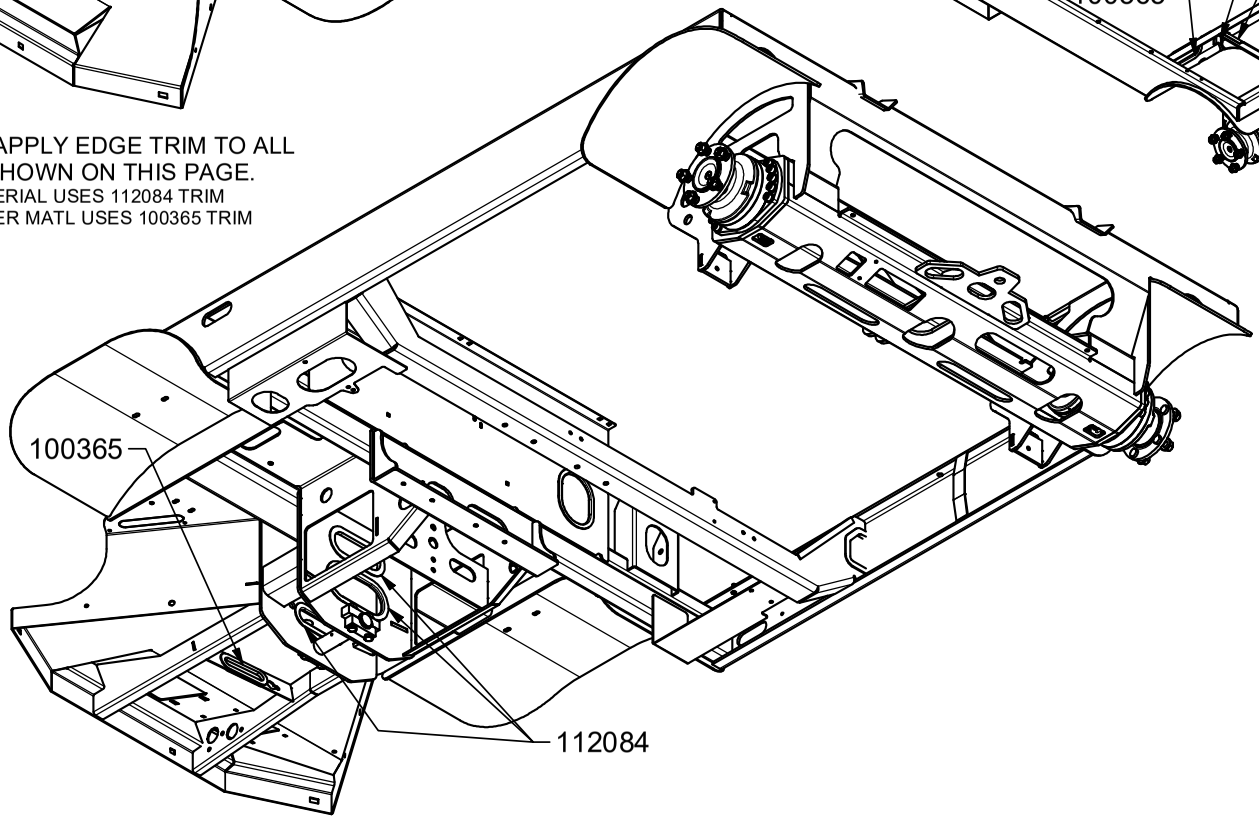

10-27-2021

Parts List				Parts List			
ITEM	QTY	PART #	DESCRIPTION	ITEM	QTY	PART #	DESCRIPTION
1	1	102074	Clamp, Adel .75w x 1.25id x .406 Hole	33	1	120319	ADAPTER, 6MJ-6MB
2	4	110001	BOLT, 1/2-13 X 1.25, WIZ FLANGE	34	1	120546	ADAPTER, 20BH-16MB90
3	2	110020	Bolt, 5/16-18 X 0.75 in Carriage	35	1	120705	STEP AP203
4	6	110069	WASHER, 5/16" FLAT SAE	36	1	120740	Adapter, 20mj-12mb
5	3	110074	Hex Nut M6 X 1.0 Thd	37	1	120754	Adapter, 6fjx-6mj, -4fb Gage Port
6	1	110141	NUT, M8 X 1.25 WIZFLANGE	38	2	132014	INSULATOR CAP, (ALTERNATOR)
7	2	110155	WASHER, 3/8" FLAT SAE	39	1	132092	FUSE COVER, BUSS CFCOVER-1R
8	2	110176	BOLT, M10x1.5 x 35 SHCS	40	1	132093	FUSE HOLDER, BUSS CFBAR1-M8XSP
9	4	110220	BOLT, 1/2-13 X 1, WIZ FLANGE	41	1	132150	FUSE, 50 AMP
10	1	110300	COTTER PIN, 3/32 X 0.75	42	1	302161	COLLAR, TAPERED SPRING TENSIONER
11	2	110419	BOLT, 1/2-13 X 1.75	43	1	302162	COLLAR, SPRING TENSIONER
12	2	110422	BOLT, 5/16-18 X .75	44	1	305112	ASSY, RADIATOR SCREEN
13	1	110459	BOLT, 5/16-18 X 1, WIZ FLANGE	45	1	315186	Weldment, Kubota Throttle Mnt
14	5	110469	BOLT, M8x1.25 x 20 Gr 10.9	46	1	315379	WELDMENT, RADIATOR MOUNT
15	9	110560	BOLT, M10-1.25 X 20 HHCS 8.8 PLAIN	47	1	315417	WELDMENT, NEUTRAL CENTERING
16	4	110588	NUT, 1/2-13 WIZ FLANGE	48	2	317301	CATCH, LATCH
17	3	110606	NUT, 5/16-18 WIZ FLANGE	49	1	317303	BRKT, NEUTRAL SAFETY SW
18	3	110623	NUT, 5/16-24	50	1	317304	LEVER, PROPULSION PUMP
19	2	110666	WASHER, 1/2" LOCK	51	1	317305	BRKT, PUSH/PULL CABLE
20	7	110674	WASHER, 5/16" LOCK	52	1	317316	BOLT, NEUTRAL CENTERING PIVOT
21	11	110689	Washer, M10, Lock	53	1	317421	BRKT, NEUTRAL SPRING
22	2	110692	WASHER, 6mm LOCK	54	1	323054	Pump, PM30 Propulsion, 1.53 CI / .49 CI Charge
23	1	110728	CLAMP, ADEL DOUBLE .75WX.5IDX.406HOLE	55	1	323063	PUMP, DOUBLE GEAR 1.16 / .24 CI
24	2	110931	BOLT, M6x1 x 25 Gr 8.8	56	1	332004	Sender, Water, 3/8 Npt
25	1	111196	Connecting Rod, 5/16-24 X 5/16-24 X 6.0, ZINC	57	1	332066	SWITCH, 221 F TEMP, 6MP, N.O. RISING
26	1	111197	Spring, Compression 5.12 L X .54 OD X .049 Wire	58	1	342011	ADAPTER - PUMP, KUBOTA 1505, KIT
27	4	112101	CLAMP, 1.50", T-BOLT	59	1	342067	MANIFOLD, TOP OUTLET EXHAUST
28	1	120144	ADAPTER, 6MJ-10MB	60	2	540079	BEARING, BALL, 1620RS
29	1	120224	ADAPTER, 10MJ-10MB90	61	1	550046	CLEVIS, 5/16-24 X 1.5
30	2	120249	ADAPTER, 4MJ-6MB	62	1	550048	CLEVIS PIN, 5/16"
31	1	120254	ADAPTER, 12MJ-12MB	63	1	801002	HOSE, UPPER RADIATOR
32	2	120256	ADAPTER, 12MJ-16MB	64	1	801003	HOSE, LOWER RADIATOR

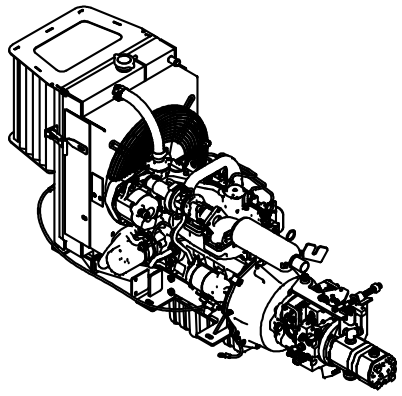

(PARTS LIST CONTINUED ON PAGE 2)

ENGINE ASSEMBLY

6-24-2021

305072	REV: F

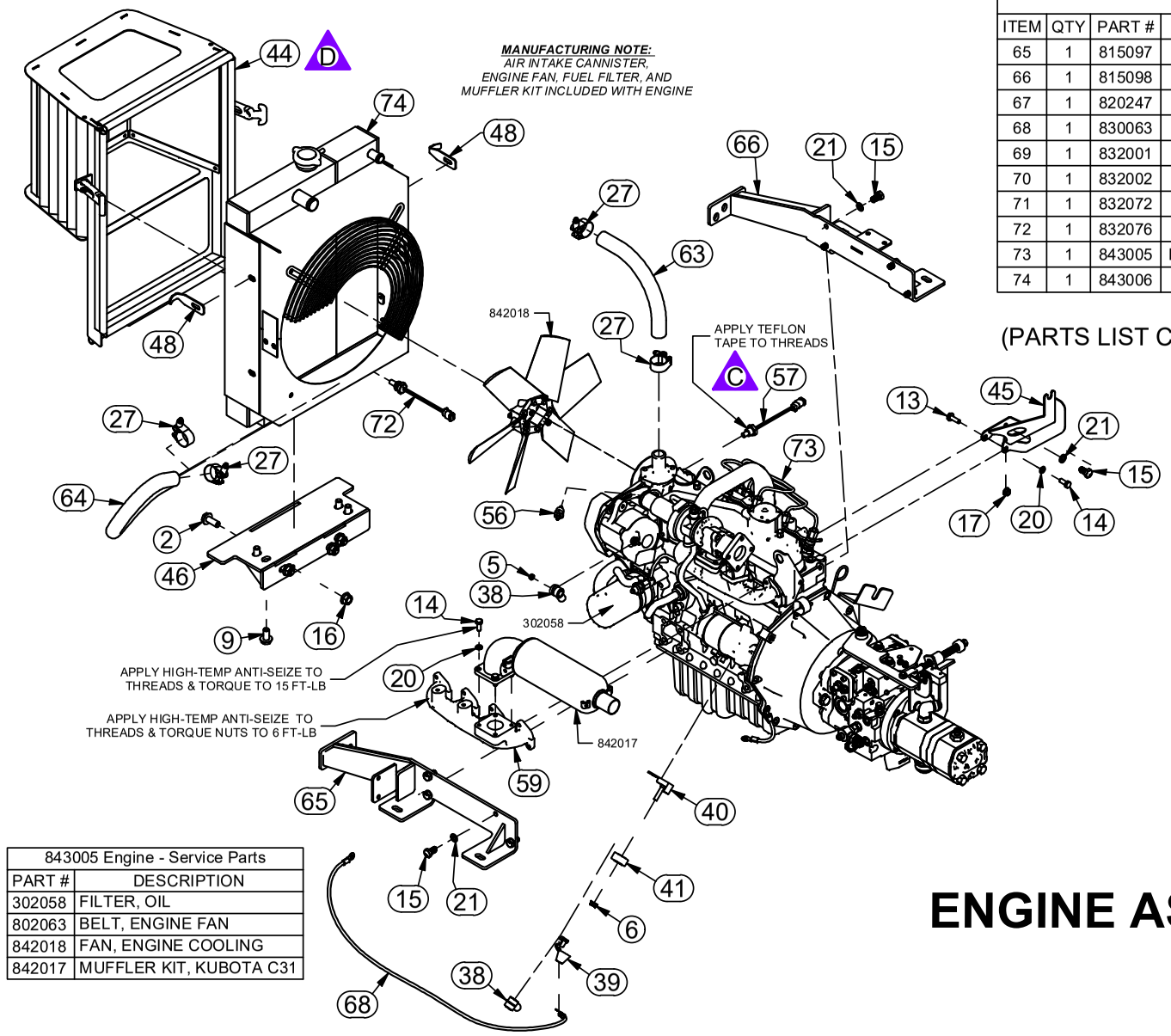

Parts List			
ITEM	QTY	PART #	DESCRIPTION
65	1	815097	WELDMENT, LH ENG/RAD MOUNT
66	1	815098	WELDMENT, RH ENG/RAD MOUNT
67	1	820247	O'RING 2-042 1/16" BUNA
68	1	830063	CABLE, POSITIVE BATTERY
69	1	832001	CABLE, GROUND
70	1	832002	SWITCH ROLLER PLUNGER
71	1	832072	HARNESS, 72LC ENGINE
72	1	832076	Switch, 190 F Temp, 8MB, N.C. Rising
73	1	843005	ENGINE, KUBOTA V1505 TIER 4F (25HP)
74	1	843006	COOLING PACKAGE, RADIATOR & OIL

(PARTS LIST CONTINUED FROM PAGE 1)

843005 Engine - Service Parts	
PART #	DESCRIPTION
302058	FILTER, OIL
802063	BELT, ENGINE FAN
842018	FAN, ENGINE COOLING
842017	MUFFLER KIT, KUBOTA C31

ENGINE ASSEMBLY

6-24-2021

305072	REV: F

ENGINE ASSEMBLY

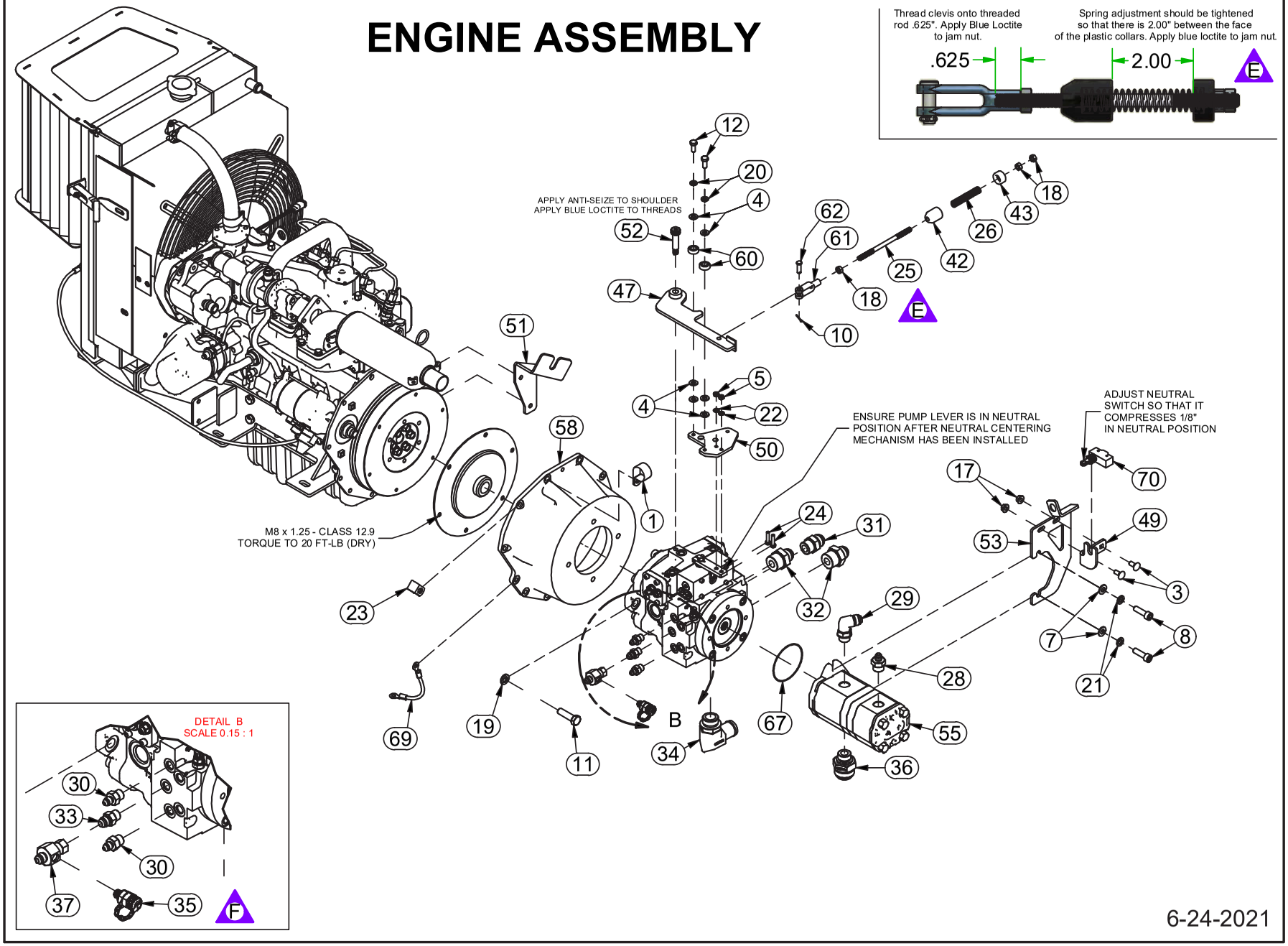

6-24-2021

305072	REV: F

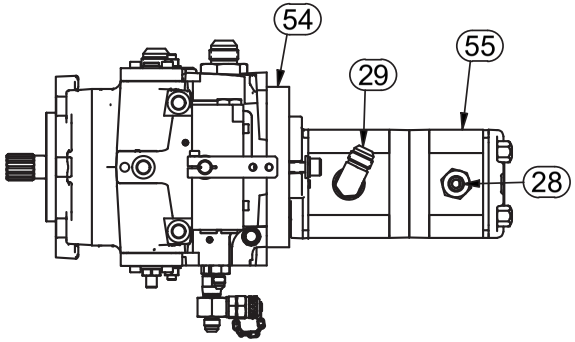

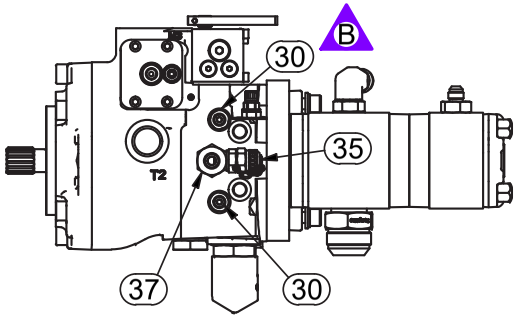

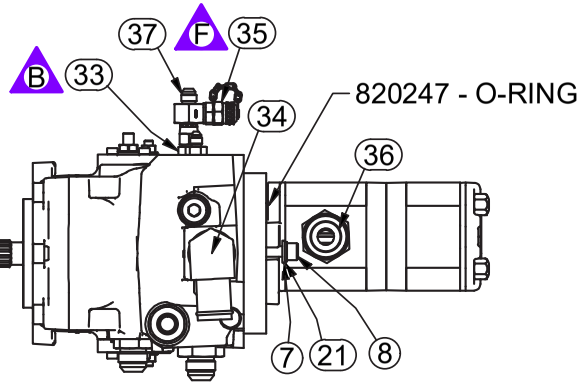

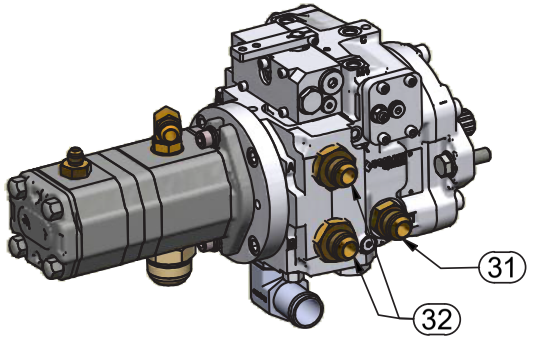

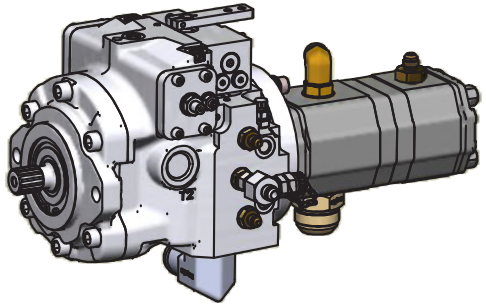

Parts List				Parts List			
ITEM	QTY	PART #	DESCRIPTION	ITEM	QTY	PART #	DESCRIPTION
7	2	110155	WASHER, 3/8" FLAT SAE	34	1	120546	ADAPTER, 20BH-16MB90
8	2	110176	BOLT, M10x1.5 x 35 SHCS	35	1	120705	STEP AP203
21	11	110689	Washer, M10, Lock	36	1	120740	Adapter, 20mj-12mb
28	1	120144	ADAPTER, 6MJ-10MB	37	1	120754	Adapter, 6fjx-6mj, -4fb Gage Port
29	1	120224	ADAPTER, 10MJ-10MB90				
30	2	120249	ADAPTER, 4MJ-6MB	54	1	323054	Pump, PM30 Propulsion, 1.53 CI / .49 CI Charge
31	1	120254	ADAPTER, 12MJ-12MB				
32	2	120256	ADAPTER, 12MJ-16MB	55	1	323063	PUMP, DOUBLE GEAR 1.16 / .24 CI
33	1	120319	ADAPTER, 6MJ-6MB				
				67	1	820247	O'RING 2-042 1/16" BUNA

HYDRAULIC PUMP ASSEMBLY

6-24-2021

305112	REV: NC

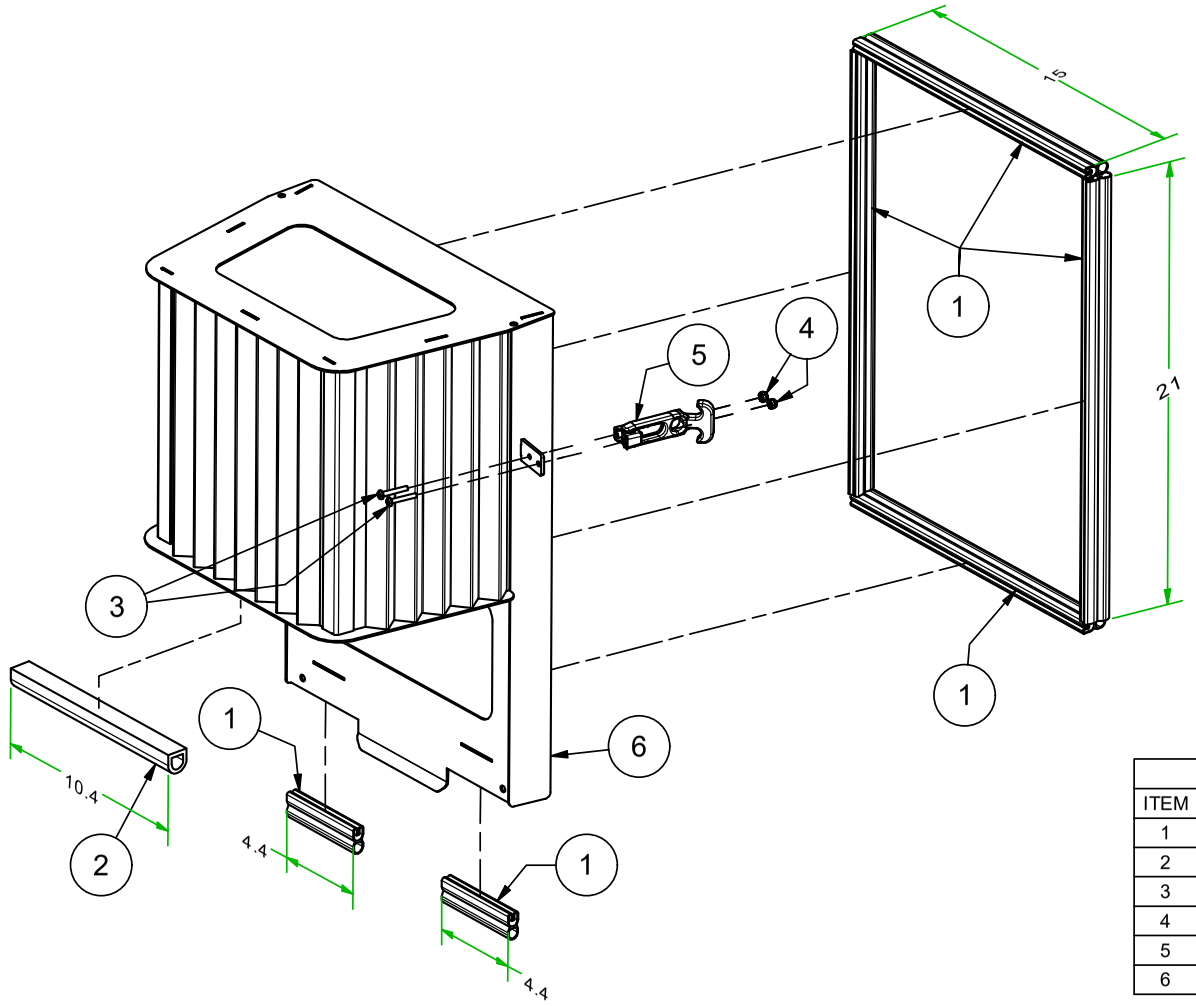

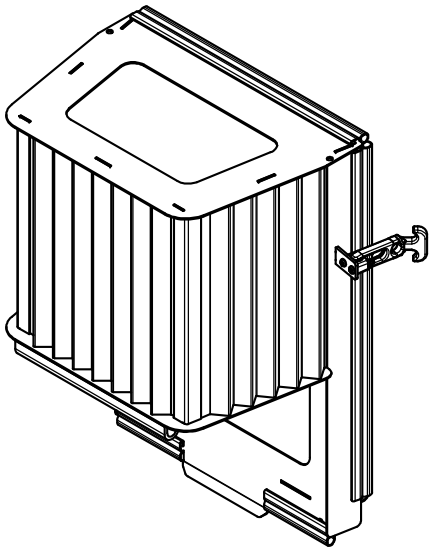

Parts List			
ITEM	QTY	PART #	DESCRIPTION
1	7'	100360	MOULDING, EDGE BULB
2	1'	102004	D-Seal, Rubber 1.00" x 1.00"
3	4	110339	SCREW, 10-24X1.25 PAN HEAD PHPS
4	4	110631	NUT, 10-24 LOCK NYLON INSERT
5	2	112105	LATCH, RUBBER T-HANDLE DRAW
6	1	315400	WELDMENT, RADIATOR SCREEN

REPLACES 305073

RADIATOR SCREEN ASSEMBLY

3-16-2021

ENGINE INSTALLATION

Parts List			
ITEM	QTY	PART #	DESCRIPTION
1	12	110020	Bolt, 5/16-18 X 0.75 in Carriage
2	2	110290	NUT, 1/4-20 WIZ FLANGE
3	2	110362	U-BOLT, 5/16
4	1	110426	BOLT, 5/16-18 X 0.5, WIZ FLANGE
5	2	110434	BOLT, 1/4-20 X 0.5, WIZ FLANGE
6	8	110440	BOLT, 3/8-16 X 1, WIZ FLANGE
7	10	110444	BOLT, 5/16-18 X 0.75, WIZ FLANGE
8	2	110459	BOLT, 5/16-18 X 1, WIZ FLANGE
9	4	110577	BOLT, M12x1.75 x 45 Gr 10.9
10	31	110606	NUT, 5/16-18 WIZ FLANGE
11	8	110645	NUT, 3/8-16 WIZ FLANGE
12	4	110658	WASHER, 1/2" FLAT STANDARD
13	2	110665	WASHER, 5/16" FLAT STANDARD
14	4	110666	WASHER, 1/2" LOCK
15	1	110779	CLAMP, 1 1/2" EXHAUST
16	2	111198	BOLT, 5/16-18 X 9.5 Zinc Full Thread
17	1	132069	BATTERY TERMINAL COVER, POSITIVE
18	1	132070	BATTERY TERMINAL COVER, NEGATIVE
19	1	305072	ASSY, ENGINE
20	1	311603	BRACKET - HOLD DOWN, BATTERY
21	1	311941	TUBE, AIR INTAKE
22	1	312036	REDUCER, 2.0" TO 1.75"
23	2	312037	ELBOW, 2.0" 90 DEG
24	1	315389	WELDMENT, HAWK EXHAUST
25	1	317205	SUPPORT, REAR SHIELD
26	3	317206	SUPPORT, UPPER SHIELD
27	1	317235	SHIELD, REAR ENGINE
28	1	317236	SUPPORT, VERTICAL REAR SHIELD
29	1	317248	BRKT, EXHAUST SUPPORT
30	1	530051	CABLE, BATTERY/GND 16" BLACK
31	4	800021	MOTOR MOUNT
32	1	832011	BATTERY, SEALED GEL W/ L TERMINAL

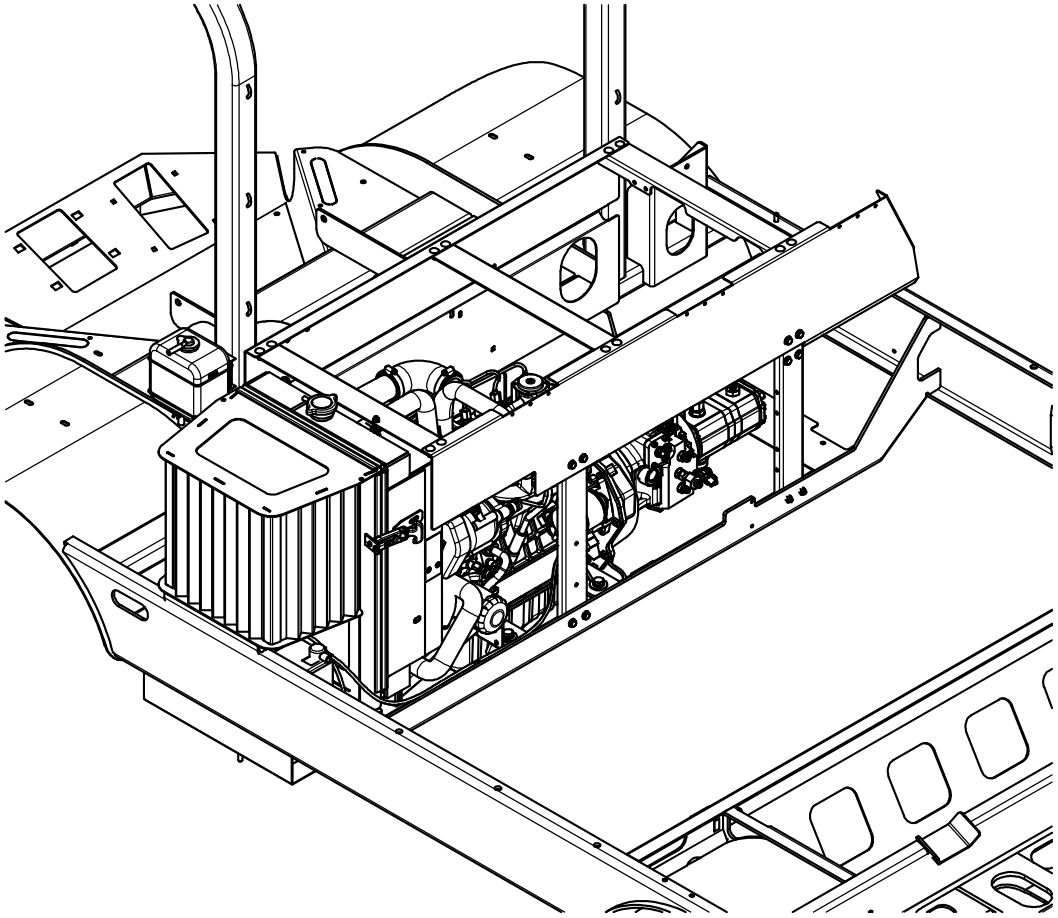

1-5-2022

305082	REV: B

ENGINE INSTALLATION

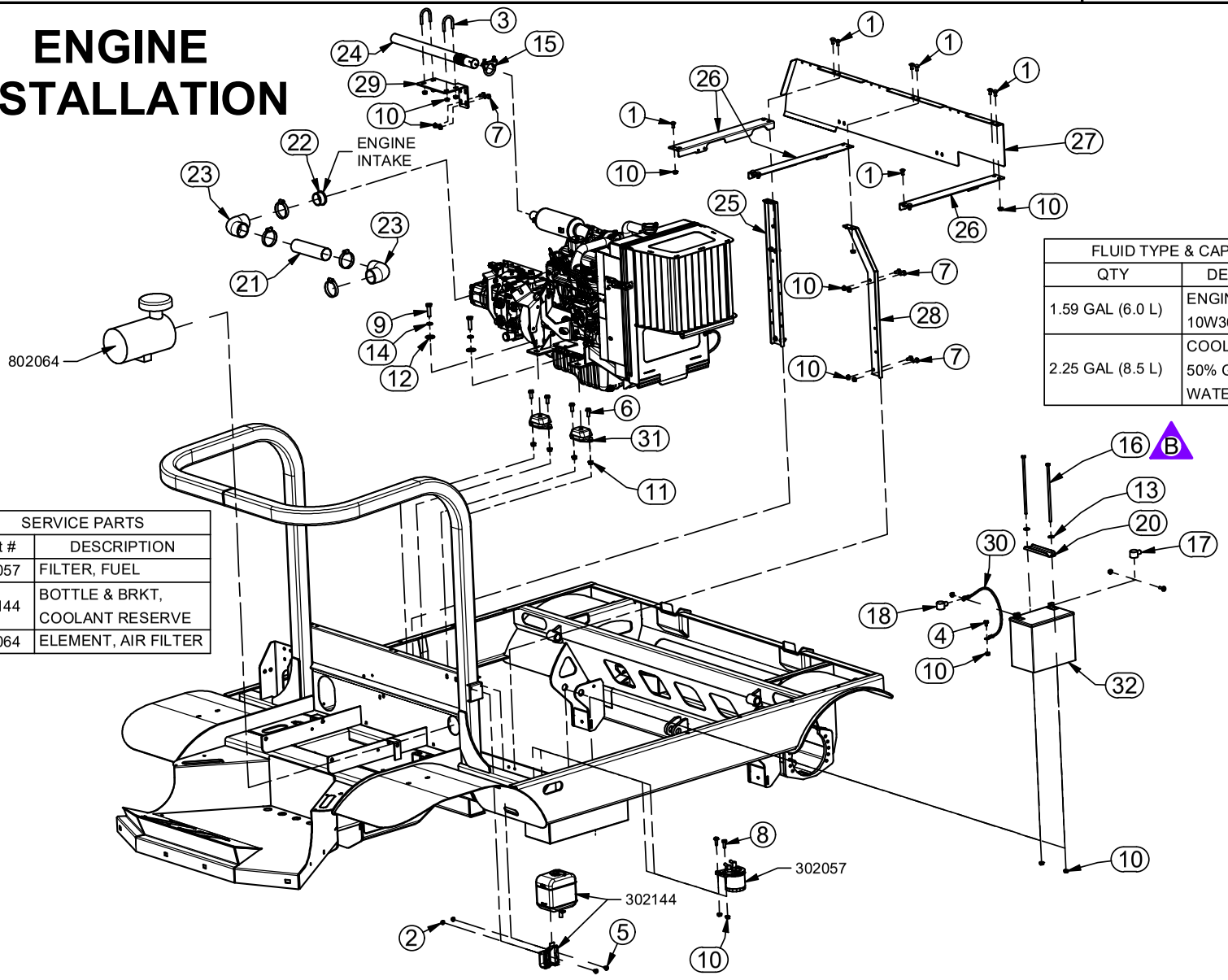

SERVICE PARTS	
Part #	DESCRIPTION
302057	FILTER, FUEL
302144	BOTTLE & BRKT, COOLANT RESERVE
802064	ELEMENT, AIR FILTER

FLUID TYPE & CAPACITIES	
QTY	DESCRIPTION
1.59 GAL (6.0 L)	ENGINE OIL - SAE 10W30 or 15W-40
2.25 GAL (8.5 L)	COOLANT - 50% GLYCOL / 50% WATER MIX

1-5-2022

FUEL TANK INSTALLATION

Parts List			
ITEM	QTY	PART #	DESCRIPTION
1	10	100361	CLAMP, HOSE #4 .25 MINI
2	128"	100708	Hose, 3/16 High Pressure Fuel
3	132"	100756	Hose, 5/16 High Pressure Fuel
4	1	110090	WASHER, #10 FLAT STANDARD
5	4	110290	NUT, 1/4-20 WIZ FLANGE
6	4	110437	BOLT, 3/8-16 X 0.75, WIZ FLANGE
7	4	110468	BOLT, 1/4-20 X 0.75, WIZ FLANGE
8	4	110631	NUT, 10-24 LOCK NYLON INSERT
9	4	110645	NUT, 3/8-16 WIZ FLANGE
10	4	110709	SCREW, 10-24 X 0.75, RHMS
11	5	112053	SCREW, 10-32 X 1/2 MACH SEAL
12	1	120040	ADAPTER, 4MJ-6MP90
13	1	120102	ADAPTER, BULKHEAD, 6MJ-6MJ
14	2	120126	ADAPTER, BULKHEAD, 4MJ-4MJ
15	2	120215	ADAPTER, 4MJ-4FJX-4MJ
16	1	120216	ADAPTER, 6MJ-6FJX-6MJ
17	1	120378	ADAPTER, 5HB-6FBX
18	1	120487	ADAPTER, 12MJ-12MJ-12MJ BULKHEAD
19	1	120495	Nut, Lock, Bulkhead, -12
20	1	120516	Adapter, 12fjx-12mj90tube
21	1	120655	Adapter, 3hb-4fj
22	1	301010	HOSE, FUEL FILL
23	1	302137	FUEL CAP, 2" DIESEL, GREEN
24	1	315301	WELDMENT, DIESEL FILLER NECK
25	1	315342	WELDMENT, FUEL TANK
26	1	317175	BRKT, FUEL FILL
27	1	332058	Fuel Level Sender, 9.5" Depth
28	1	500172	GASKET, FUEL SENDER
29	1	500209	FITTING, REDUCER 3/8 X 1/4 NPT
30	2	511003	CLAMP, HOSE #36 2.25"
31	1	802023	VALVE, FUEL SHUT OFF 6MB-4MP

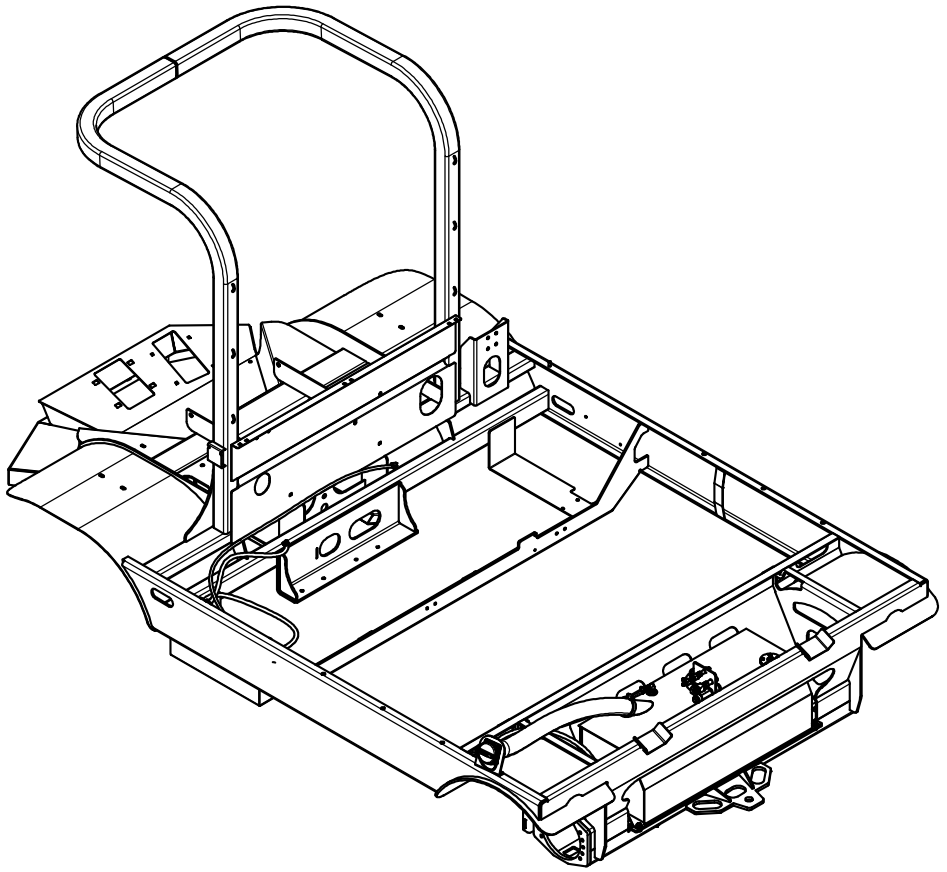

5-17-2021

305088	REV: A

FUEL TANK INSTALLATION

Service Parts	
Part Number	Description
302103	Filter, Fuel
302057	Filter, Fuel
802062	Pump, Electric Fuel

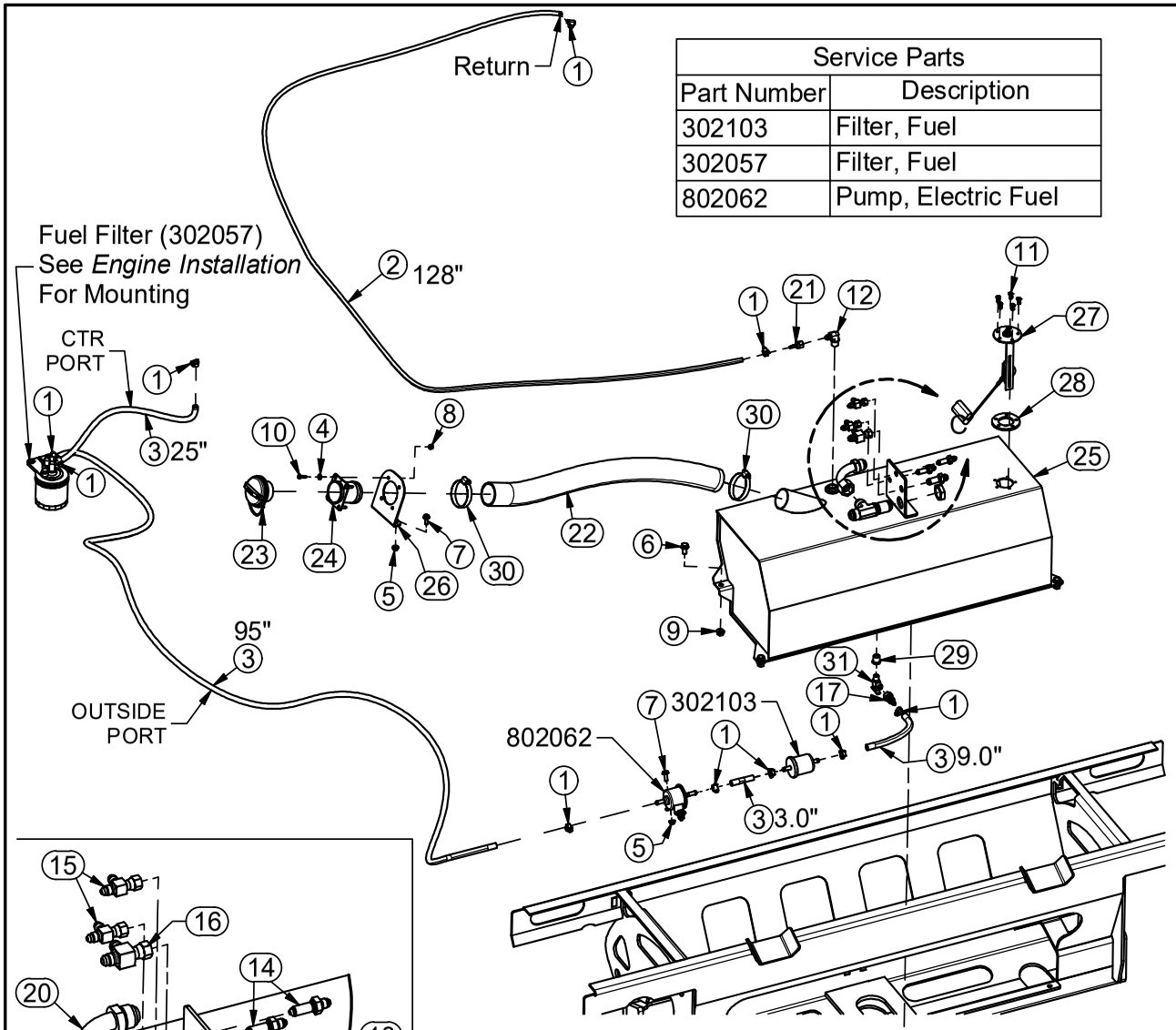

Right Side Plumbing

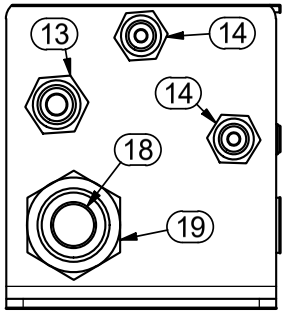

Left Side Plumbing

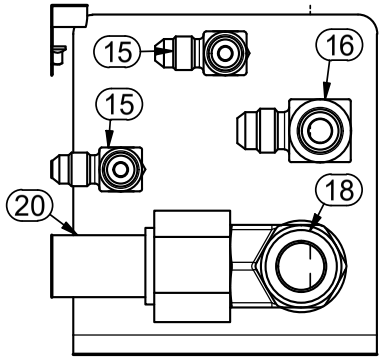

5-17-2021

305106	REV: A

PROPULSION HYDRAULIC INSTALLATION

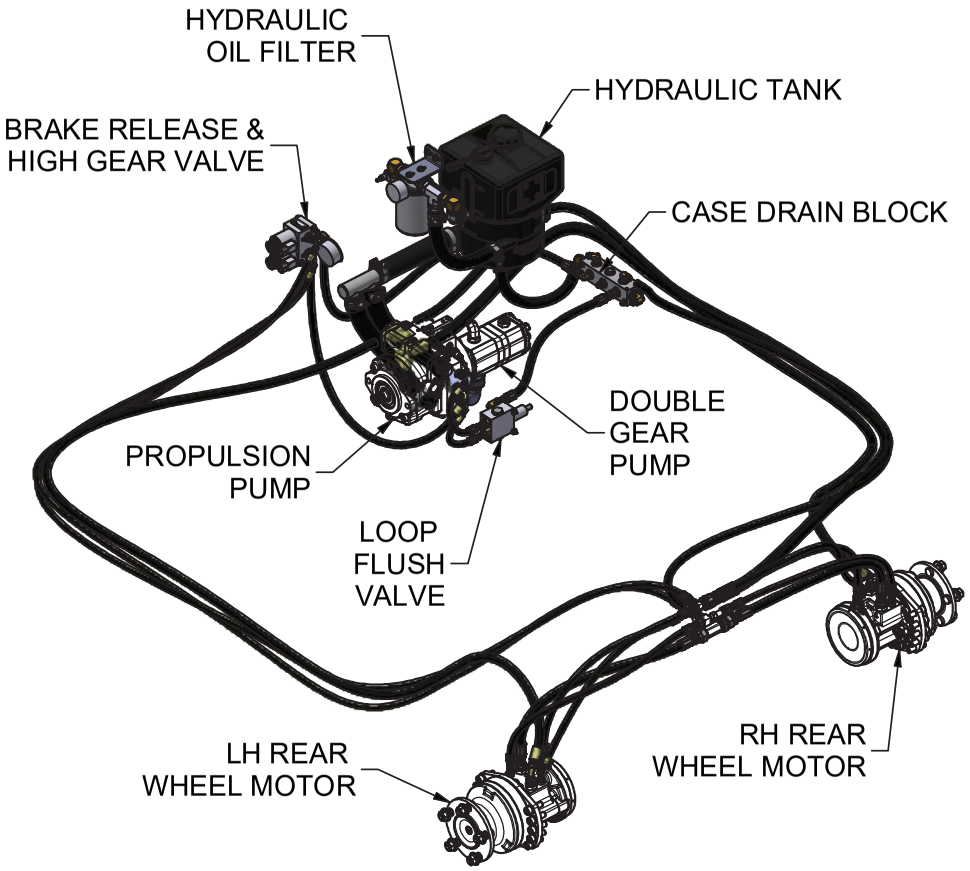

Parts List			
ITEM	QTY	PART #	DESCRIPTION
1	2	110845	BOLT, M12x1.75 x 60 Gr 10.9
2	6	110290	NUT, 1/4-20 WIZ FLANGE
3	2	110410	BOLT, 1/4-20 X 2.5
4	4	110434	BOLT, 1/4-20 X 0.5, WIZ FLANGE
5	4	110440	BOLT, 3/8-16 X 1, WIZ FLANGE
6	1	120728	PLUG, 6MB HEX
7	1	120291	CAP, 6FJ
8	2	111011	Bolt, M5-.80 X 55, SHCS, Stainless
9	2	111012	STEP AP203
10	2	111013	WASHER, M5, Flat, Stainless
11	2	570483	TOOL, BRAKE RELEASE
12	3	112007	CLAMP, 1.75", T-BOLT
13	6	112008	CLAMP, 1.25", T-BOLT
14	2	112101	CLAMP, 1.50", T-BOLT
15	2	112137	CLAMP, 2.00", T-BOLT
16	2	120134	ADAPTER, 6MJ-8MB90
17	1	120187	ADAPTER, 12BH-8MB90
18	1	120216	ADAPTER, 6MJ-6FJX-6MJ
19	4	120222	ADAPTER, 6MJ-6MB90
20	2	120226	ADAPTER, 12BH-12MB90
21	2	120249	ADAPTER, 4MJ-6MB
22	1	120754	Adapter, 6fjx-6mj, -4fb Gage Port
23	1	120303	ADAPTER, 12MB-16HB
24	3	120319	ADAPTER, 6MJ-6MB
25	2	111101	STEP AP203
26	2	120739	ADAPTER, 4MJ-8MB
27	1	120742	ADAPTER, 12MB-12FB-12FB
28	2	110844	BOLT, 1/4-20 X 3
29	1	122016	ADAPTER, 12MJ-12MJ-12FJX
30	1	122034	HEAD, SPIN-ON FILTER, -12SAE
31	1	260265	MOUNTING BRACKET, FILTER
32	1	305087	Assy, Hydraulic Tank, ISO
33	1	322095	BLOCK, CASE DRAIN
34	1	322096	TEE, 1.5 x 1.25 x 1.25 BH
35	1	322098	GAUGE, PRESSURE, 600 PSI, 4MB
36	1	323060	VALVE, LOOP FLUSH
37	1	323061	VALVE, BRK RELEASE & HI GEAR
38	1	323068	HOSE KIT, 2WD HAWK GROUND DRIVE
39	2	110053	Hex Nut M12 X 1.75 Thd
40	1	822044	FILTER, 3 MICRON
41	1	822045	GAUGE, OIL FILTER

3-3-2022

305106	REV: A

VALVE ASSEMBLIES

Parts List			
ITEM	QTY	PART #	DESCRIPTION
19	1	120222	ADAPTER, 6MJ-6MB90
21	2	120249	ADAPTER, 4MJ-6MB
24	1	120319	ADAPTER, 6MJ-6MB
35	1	322098	GAUGE, PRESSURE, 600 PSI, 4MB
37	1	323061	VALVE, BRK RELEASE & HI GEAR
22	1	120754	Adapter, 6fjx-6mj, -4fb Gage Port

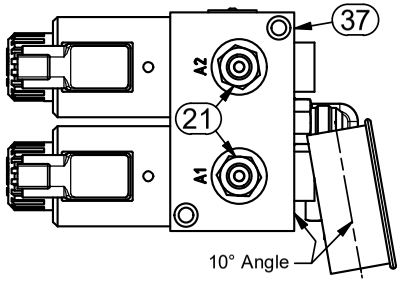

Brake Release & High Gear Valve

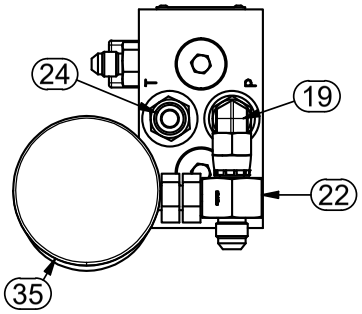

Loop Flush Valve

Parts List			
ITEM	QTY	PART #	DESCRIPTION
16	1	120134	ADAPTER, 6MJ-8MB90
26	2	120739	ADAPTER, 4MJ-8MB
36	1	323060	VALVE, LOOP FLUSH

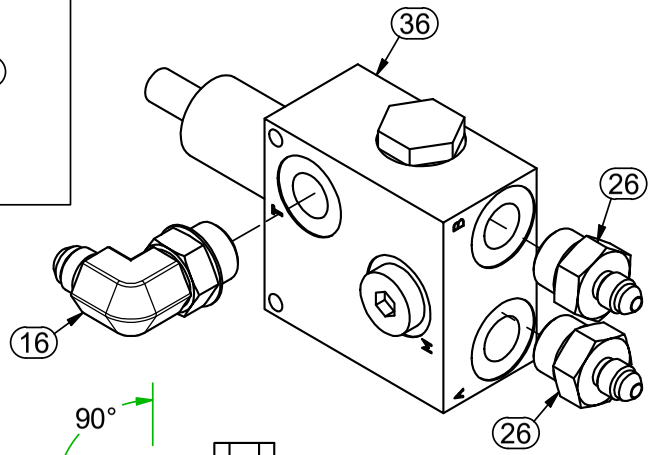

Case Drain Block

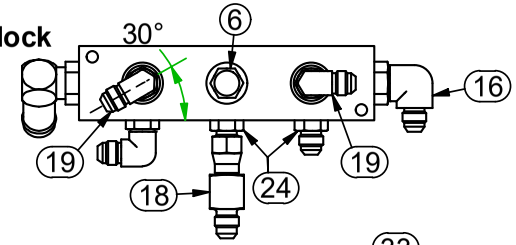

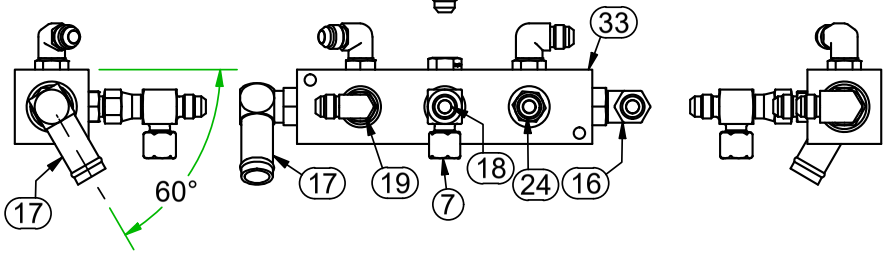

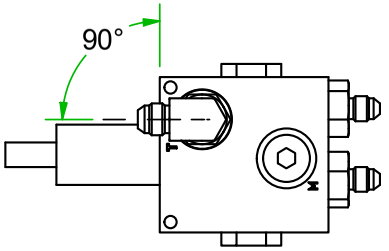

Parts List			
ITEM	QTY	PART #	DESCRIPTION
6	1	120728	PLUG, 6MB HEX
7	1	120291	CAP, 6FJ
16	1	120134	ADAPTER, 6MJ-8MB90
17	1	120187	ADAPTER, 12BH-8MB90

Parts List			
ITEM	QTY	PART #	DESCRIPTION
18	1	120216	ADAPTER, 6MJ-6FJX-6MJ
19	3	120222	ADAPTER, 6MJ-6MB90
24	2	120319	ADAPTER, 6MJ-6MB
33	1	322095	BLOCK, CASE DRAIN

3-3-2022

TANK, FILTER, & VALVE INSTALLATION

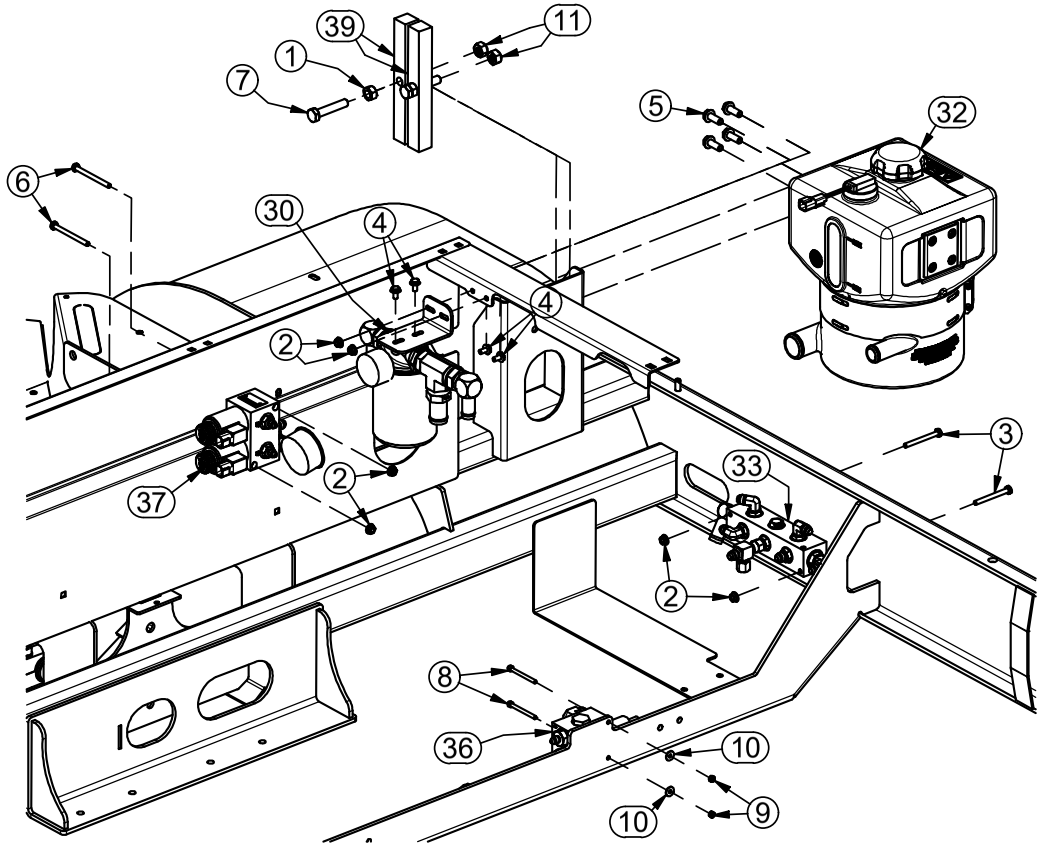

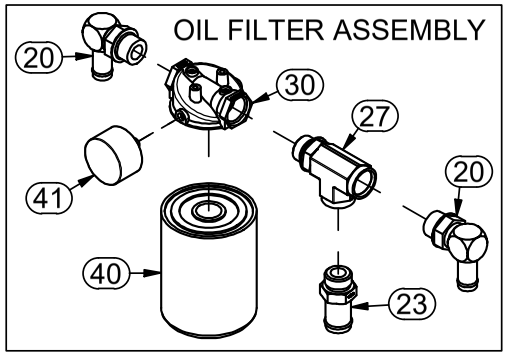

SOME PARTS HIDDEN FOR CLARITY

Parts List			
ITEM	QTY	PART #	DESCRIPTION
1	2	110053	Hex Nut M12 X 1.75 Thd
2	6	110290	NUT, 1/4-20 WIZ FLANGE
3	2	110410	BOLT, 1/4-20 X 2.5
4	4	110434	BOLT, 1/4-20 X 0.5, WIZ FLANGE
5	4	110440	BOLT, 3/8-16 X 1, WIZ FLANGE
6	2	110844	BOLT, 1/4-20 X 3
7	2	110845	BOLT, M12x1.75 x 60 Gr 10.9
8	2	111011	Bolt, M5-.80 X 55, SHCS, Stainless
9	2	111012	STEP AP203
10	2	111013	Washer, M5, Flat, Stainless
11	2	111101	STEP AP203
20	2	120226	ADAPTER, 12BH-12MB90
23	1	120303	ADAPTER, 12MB-16HB
25	1	120728	PLUG, 6MB HEX
26	2	120739	ADAPTER, 4MJ-8MB
27	1	120742	ADAPTER, 12MB-12FB-12FB
28	1	120744	ADAPTER, 6FJX-6MJ-4FB, GAGE PORT
30	1	122034	HEAD, SPIN-ON FILTER, -12SAE
32	1	305087	Assy, Hydraulic Tank, ISO
33	1	322095	BLOCK, CASE DRAIN
35	1	322098	GAUGE, PRESSURE, 600 PSI, 4MB
36	1	323060	VALVE, LOOP FLUSH
37	1	323061	VALVE, BRK RELEASE & HI GEAR
39	2	570483	TOOL, BRAKE RELEASE
40	1	822044	FILTER, 3 MICRON
41	1	822045	GAUGE, OIL FILTER

1-5-2022

305106	REV: A

PROPULSION SUCTION & DRAIN PLUMBING

Parts List			
ITEM	QTY	PART #	DESCRIPTION
12	3	112007	CLAMP, 1.75", T-BOLT
13	6	112008	CLAMP, 1.25", T-BOLT
14	2	112101	CLAMP, 1.50", T-BOLT
15	2	112137	CLAMP, 2.00", T-BOLT
17	1	120187	ADAPTER, 12BH-8MB90
20	2	120226	ADAPTER, 12BH-12MB90
23	1	120303	ADAPTER, 12MB-16HB
27	1	120742	ADAPTER, 12MB-12FB-12FB
30	1	122034	HEAD, SPIN-ON FILTER, -12SAE
32	1	305087	Assy, Hydraulic Tank, ISO
33	1	322095	BLOCK, CASE DRAIN
34	1	322096	TEE, 1.5 x 1.25 x 1.25 BH

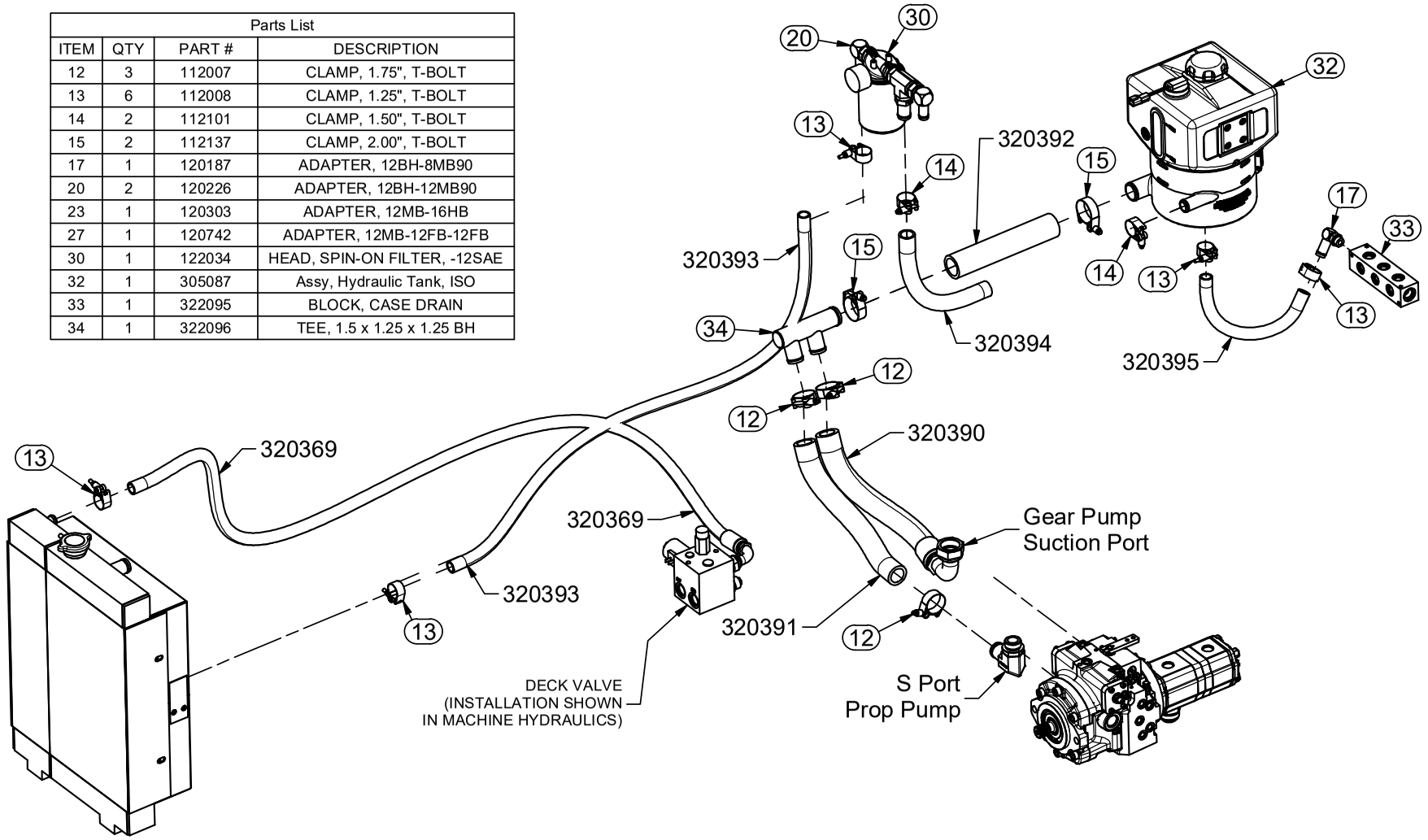

1-5-2022

305106	REV: A

REAR WHEEL MOTOR PLUMBING

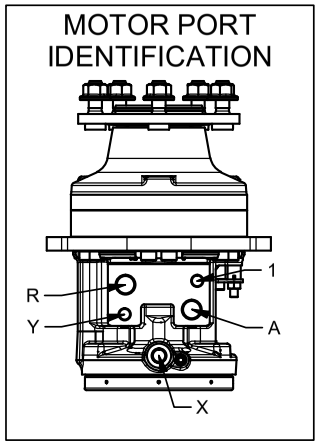

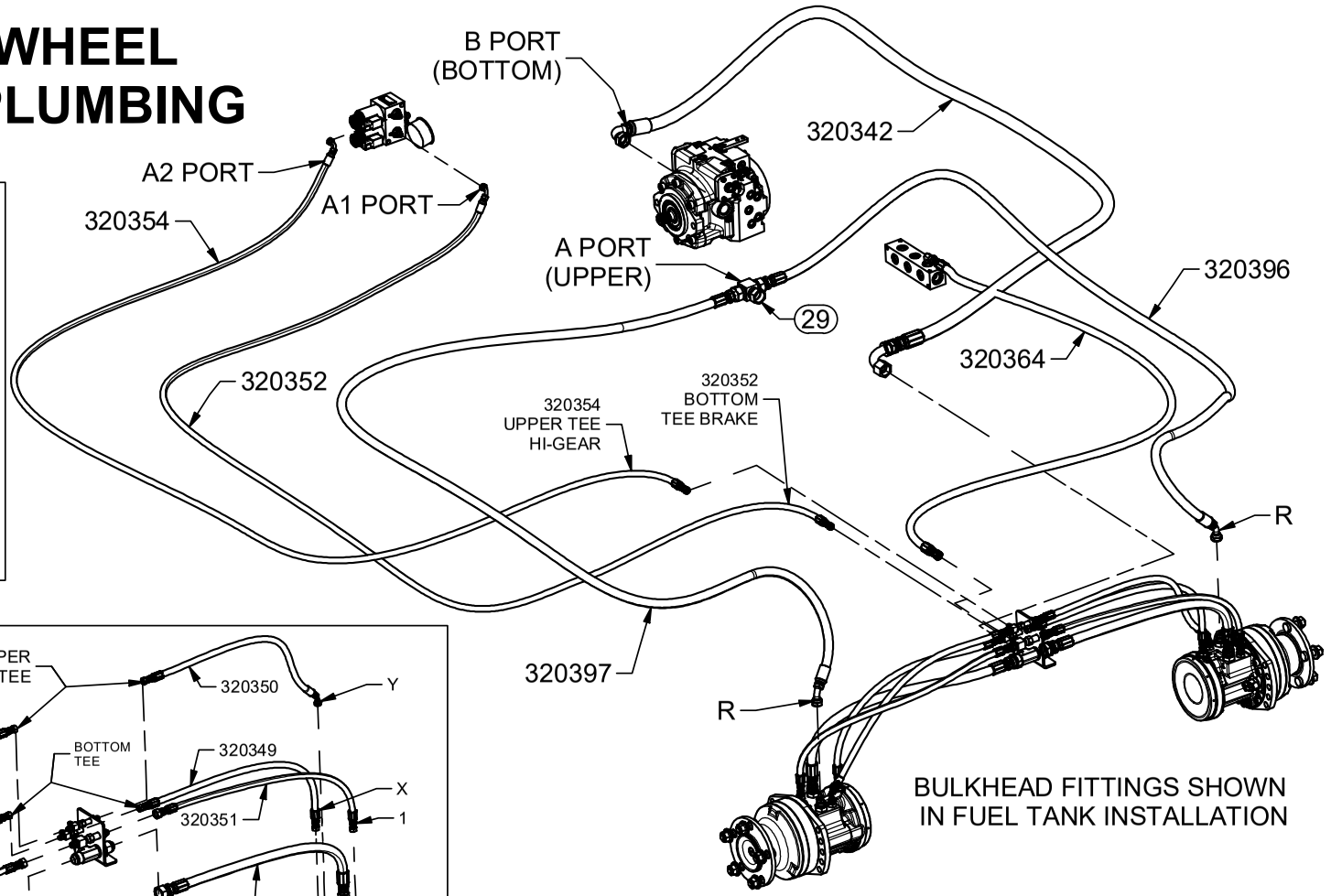

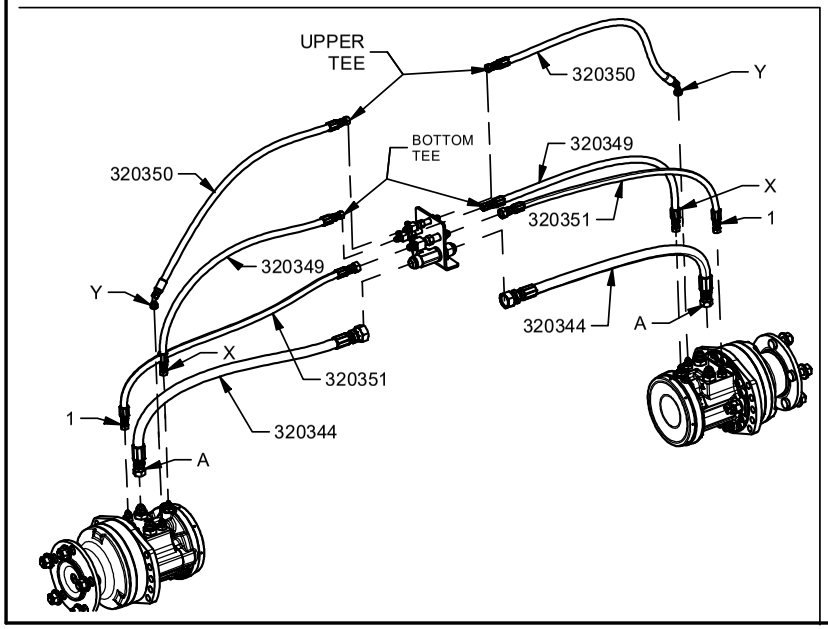

1-5-2022

PROPULSION PUMP PLUMBING

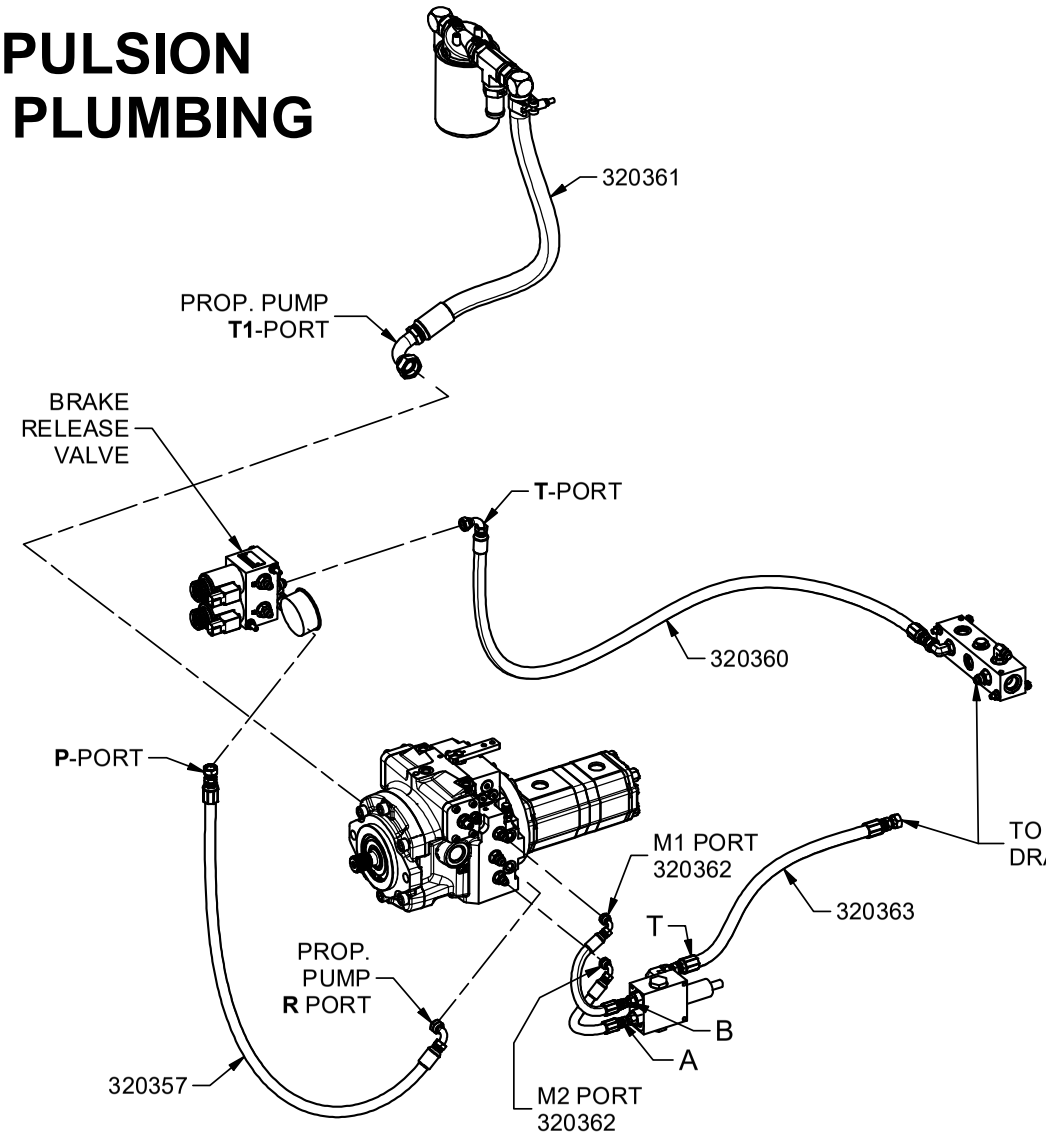

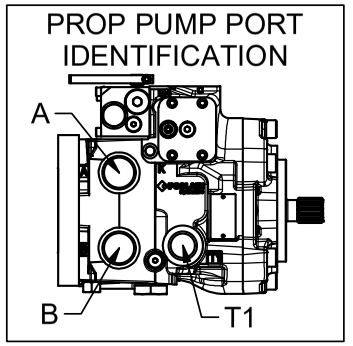

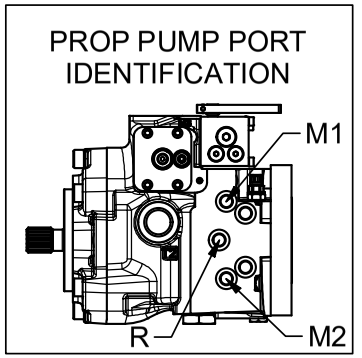

1-5-2022

SWEEPER PROPULSION SCHEMATIC - 2WD

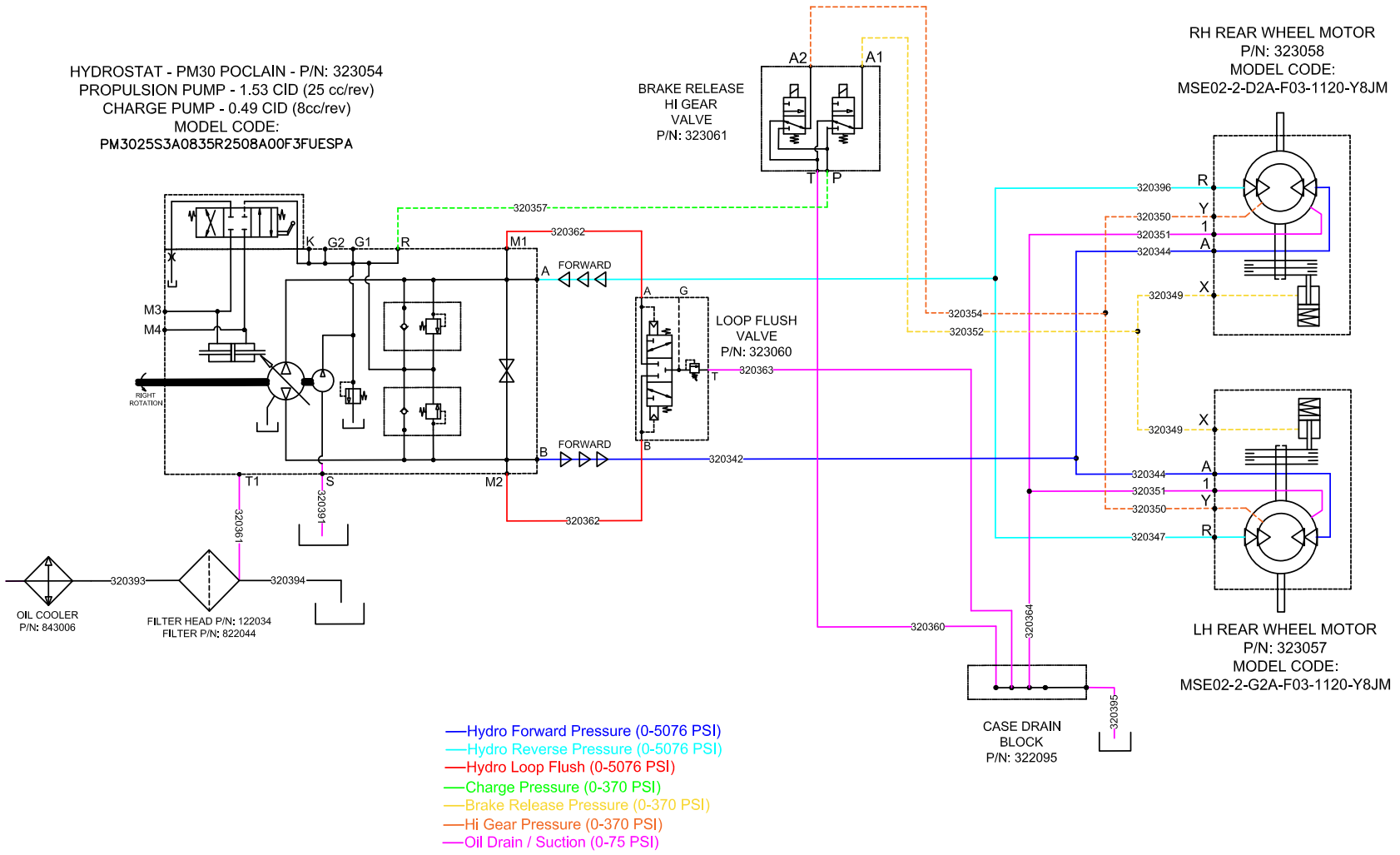

305098	REV: A

Parts List			
ITEM	QTY	PART #	DESCRIPTION
1	8	110264	BOLT, 10-24 X .5 STAINLESS, PHILLIPS
2	6	110290	NUT, 1/4-20 WIZ FLANGE
3	2	110434	BOLT, 1/4-20 X 0.5, WIZ FLANGE
4	4	110437	BOLT, 3/8-16 X 0.75, WIZ FLANGE
5	4	110474	BOLT, 1/4-20 X 1-1/2
6	2	110529	BOLT, 5/16-18 X 4.5
7	4	110588	NUT, 1/2-13 WIZ FLANGE
8	5	110606	NUT, 5/16-18 WIZ FLANGE
9	4	110640	Hex Nut M10
10	4	110645	NUT, 3/8-16 WIZ FLANGE
11	4	110689	WASHER, 10mm LOCK
12	8	110999	Nut, 10-24 U-Type, .025"-.125" panel
13	4	111055	STUD, M10 X 1.5 X 42 GRADE 8.8
14	3	111151	Hex Cap 5-16x2_1-4 UNC
15	4	112070	Bolt, 1/2-13 X 1.25 in Carriage
16	4	120092	ADAPTER, 6MJ-6MJ-6MB
17	1	120134	ADAPTER, 6MJ-8MB90
18	1	120143	ADAPTER, 12MJ-10MB
19	2	120216	ADAPTER, 6MJ-6FJX-6MJ
20	2	120222	ADAPTER, 6MJ-6MB90
21	1	120239	ADAPTER, 6MJ-8MB
22	2	120249	ADAPTER, 4MJ-6MB
23	1	120251	ADAPTER, 10MJ-10MB
24	1	120319	ADAPTER, 6MJ-6MB
25	2	120398	ADAPTER, REST 6MJ-6MB, .047
26	2	120446	ADAPTER, 8MJ-10MB
27	2	120689	Adapter, 6MB90-6FB
28	6	120739	ADAPTER, 4MJ-8MB
29	2	130012	CLAMP, ADEL AC28 .265 HOLE
30	1	302079	COLUMN ASSY, TILT STEERING
31	1	311726	MOUNT, STEERING COLUMN
32	2	311737	PLATE, ORBITAL COVER
33	1	315353	WELDMENT, OPERATOR CONSOLE
34	2	322074	VALVE, PO CHECK
35	2	322075	VALVE BODY, 3-WAY SAE-6
36	1	322097	VALVE ASSY, THREE SPOOL
37	1	323046	MOTOR, STEERING ORBITAL
38	1	323062	HOSE KIT, HAWK MACHINE HYDRAULIC

Parts List			
ITEM	QTY	PART #	DESCRIPTION
39	1	502087	Cap, Center Steering
40	1	502088	Nut, Steering Wheel, 13/16-20 UNEF
41	1	552002	STEERING WHEEL
42	1	820158	DECK VALVE

HYDRAULIC SCHEMATIC
SHOWN ON PAGE 5.10

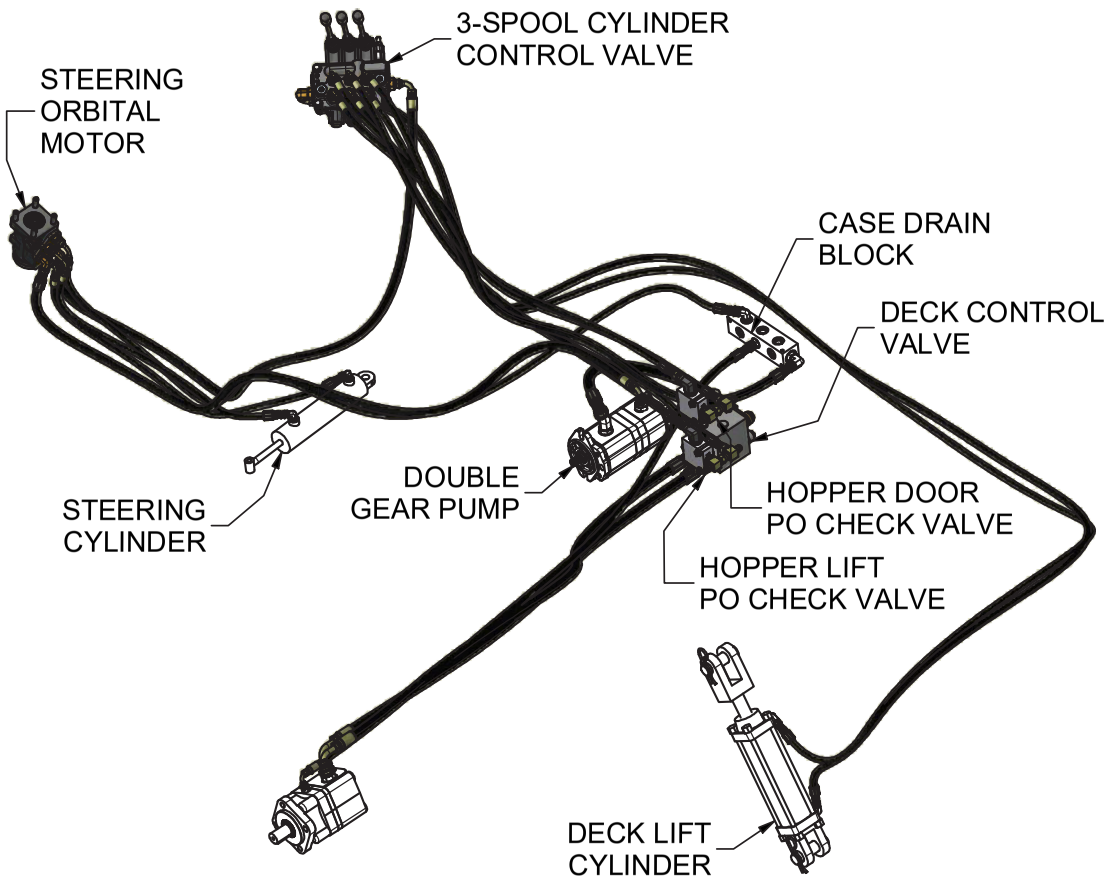

MACHINE HYDRAULIC INSTALLATION

5-17-2021

HARPER TURF EQUIPMENT

VALVE ASSEMBLIES

Three Spool Valve Assembly

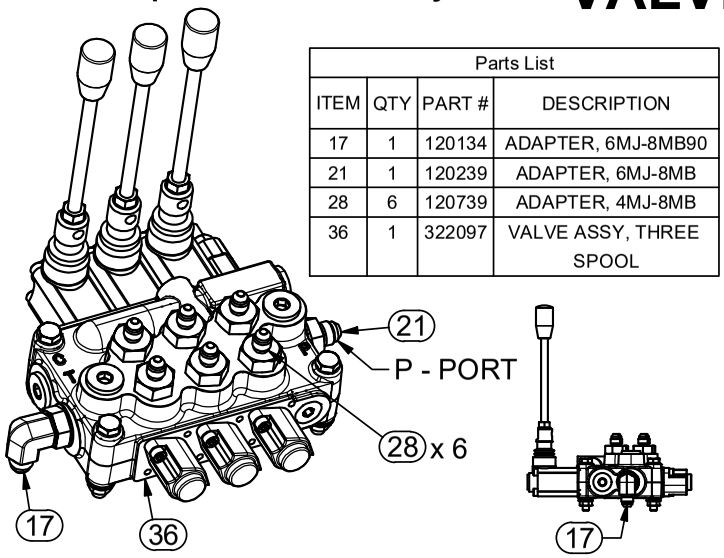

Parts List			
ITEM	QTY	PART #	DESCRIPTION
17	1	120134	ADAPTER, 6MJ-8MB90
21	1	120239	ADAPTER, 6MJ-8MB
28	6	120739	ADAPTER, 4MJ-8MB
36	1	322097	VALVE ASSY, THREE SPOOL

Deck Valve Assembly

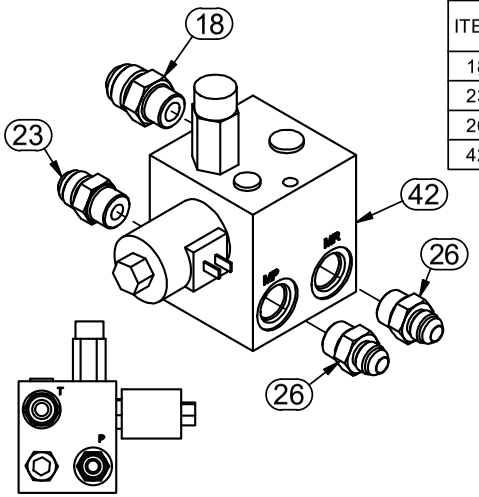

Parts List			
ITEM	QTY	PART #	DESCRIPTION
18	1	120143	ADAPTER, 12MJ-10MB
23	1	120251	ADAPTER, 10MJ-10MB
26	2	120446	ADAPTER, 8MJ-10MB
42	1	820158	DECK VALVE

820158 - SERVICE PARTS	
PART #	DESCRIPTION
522163	COIL, 12VDC DEUTSCH
820230	VALVE, COUNTER BALANCE
820231	RELIEF, 3000 PSI PRESSURE
820232	VALVE, N.O. SOLENOID CARTRIDGE

P.O. Check Valve Assembly X 2

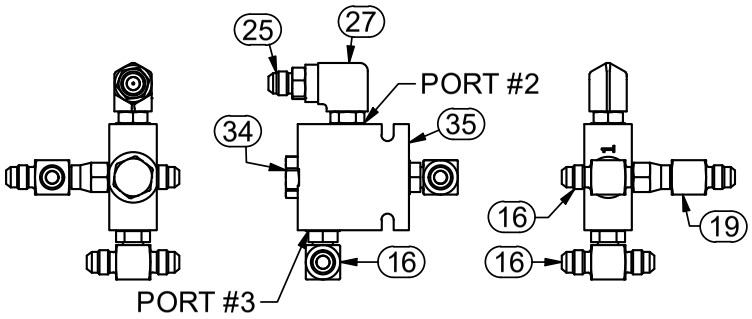

Parts List			
ITEM	QTY	PART #	DESCRIPTION
16	4	120092	ADAPTER, 6MJ-6MJ-6MB
19	2	120216	ADAPTER, 6MJ-6FJX-6MJ
25	2	120398	ADAPTER, REST 6MJ-6MB, .047
27	2	120689	Adapter, 6MB90-6FB
34	2	322074	VALVE, PO CHECK
35	2	322075	VALVE BODY, 3-WAY SAE-6

Steering Orbital Assembly

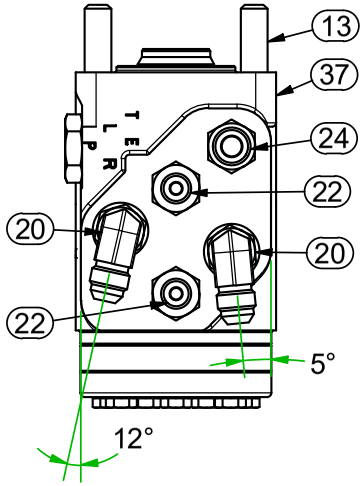

Parts List			
ITEM	QTY	PART #	DESCRIPTION
13	4	111055	STUD, M10 X 1.5 X 42 GRADE 8.8
20	2	120222	ADAPTER, 6MJ-6MB90
22	2	120249	ADAPTER, 4MJ-6MB
24	1	120319	ADAPTER, 6MJ-6MB
37	1	323046	MOTOR, STEERING ORBITAL

5-17-2021

305098	REV: A

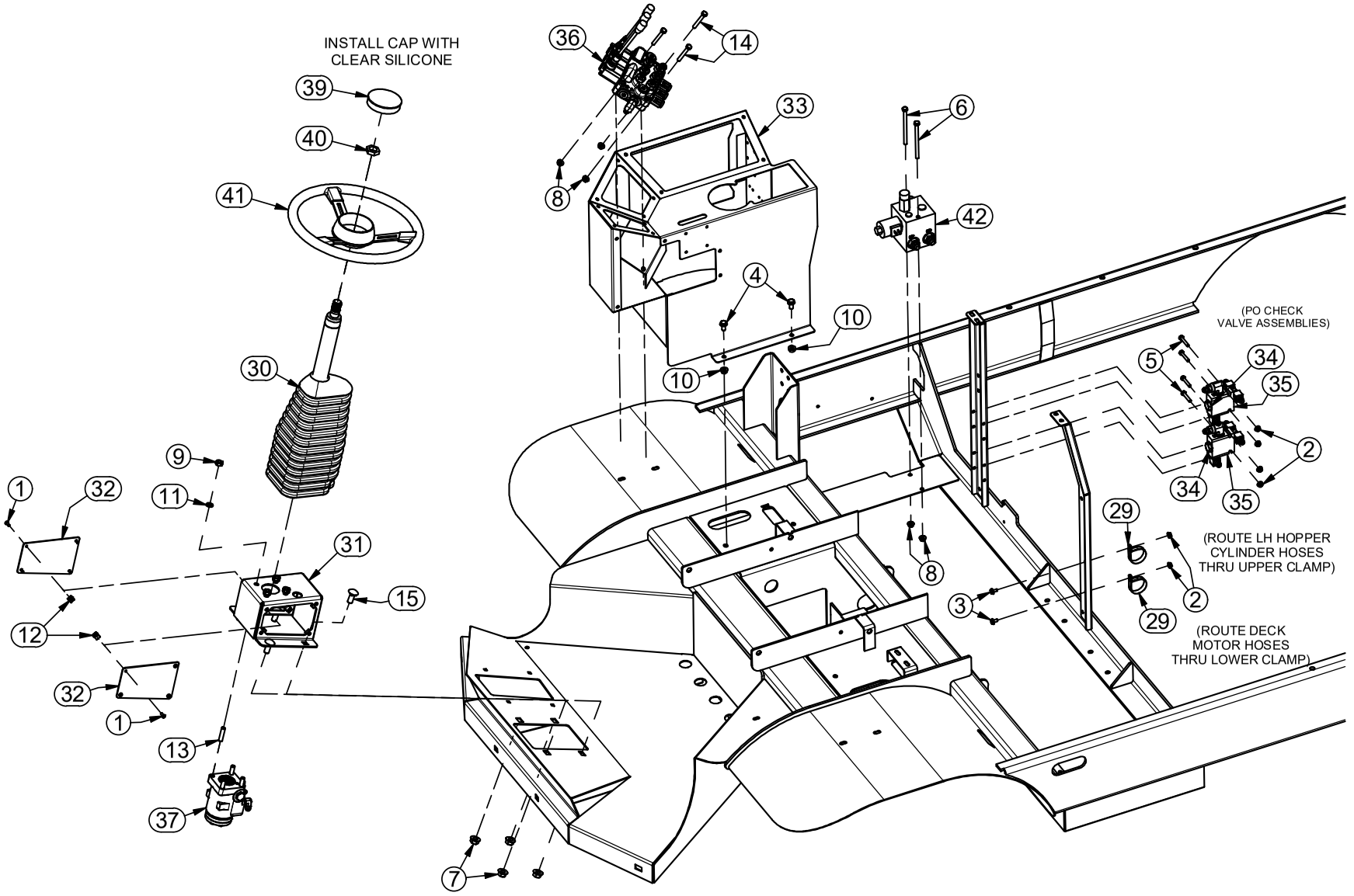

VALVE INSTALLATION

5-17-2021

305098	REV: A

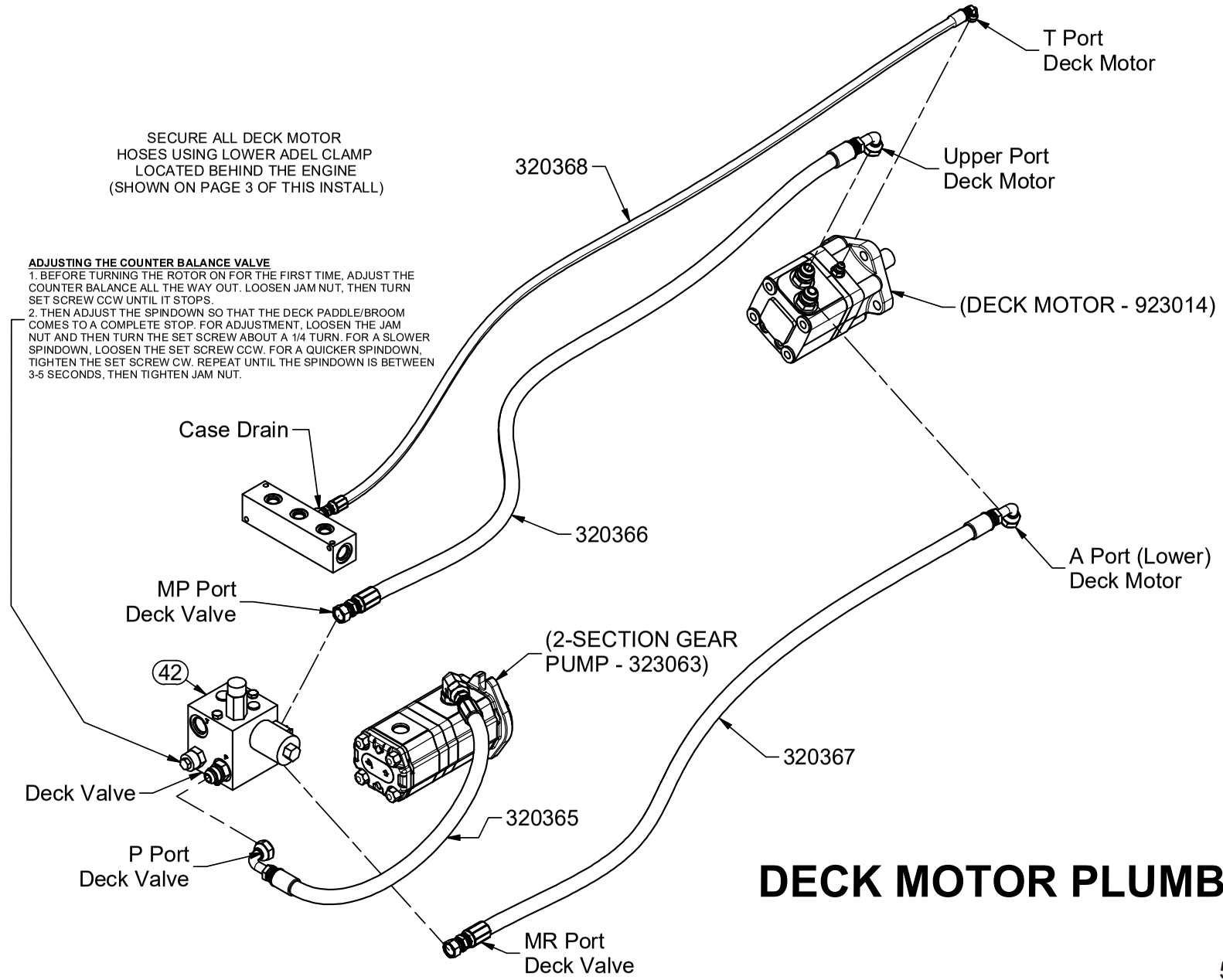
T Port
Deck Motor
SECURE ALL DECK MOTOR
HOSES USING LOWER ADEL CLAMP
LOCATED BEHIND THE ENGINE
(SHOWN ON PAGE 3 OF THIS INSTALL)
320368
Upper Port
Deck Motor
ADJUSTING THE COUNTER BALANCE VALVE
1. BEFORE TURNING THE ROTOR ON FOR THE FIRST TIME, ADJUST THE COUNTER BALANCE ALL THE WAY OUT. LOOSEN JAM NUT, THEN TURN SET SCREW CCW UNTIL IT STOPS.
2. THEN ADJUST THE SPINDOWN SO THAT THE DECK PADDLE/BROOM COMES TO A COMPLETE STOP. FOR ADJUSTMENT, LOOSEN THE JAM NUT AND THEN TURN THE SET SCREW ABOUT A 1/4 TURN. FOR A SLOWER SPINDOWN, LOOSEN THE SET SCREW CCW. FOR A QUICKER SPINDOWN, TIGHTEN THE SET SCREW CW. REPEAT UNTIL THE SPINDOWN IS BETWEEN 3-5 SECONDS, THEN TIGHTEN JAM NUT.
(DECK MOTOR - 923014)
Case Drain
320366
A Port (Lower)
Deck Motor
MP Port
Deck Valve
(2-SECTION GEAR
PUMP - 323063)
42
320367
Deck Valve
320365
P Port
Deck Valve
MR Port
Deck Valve
DECK MOTOR PLUMBING
5-17-2021

305098	REV: A

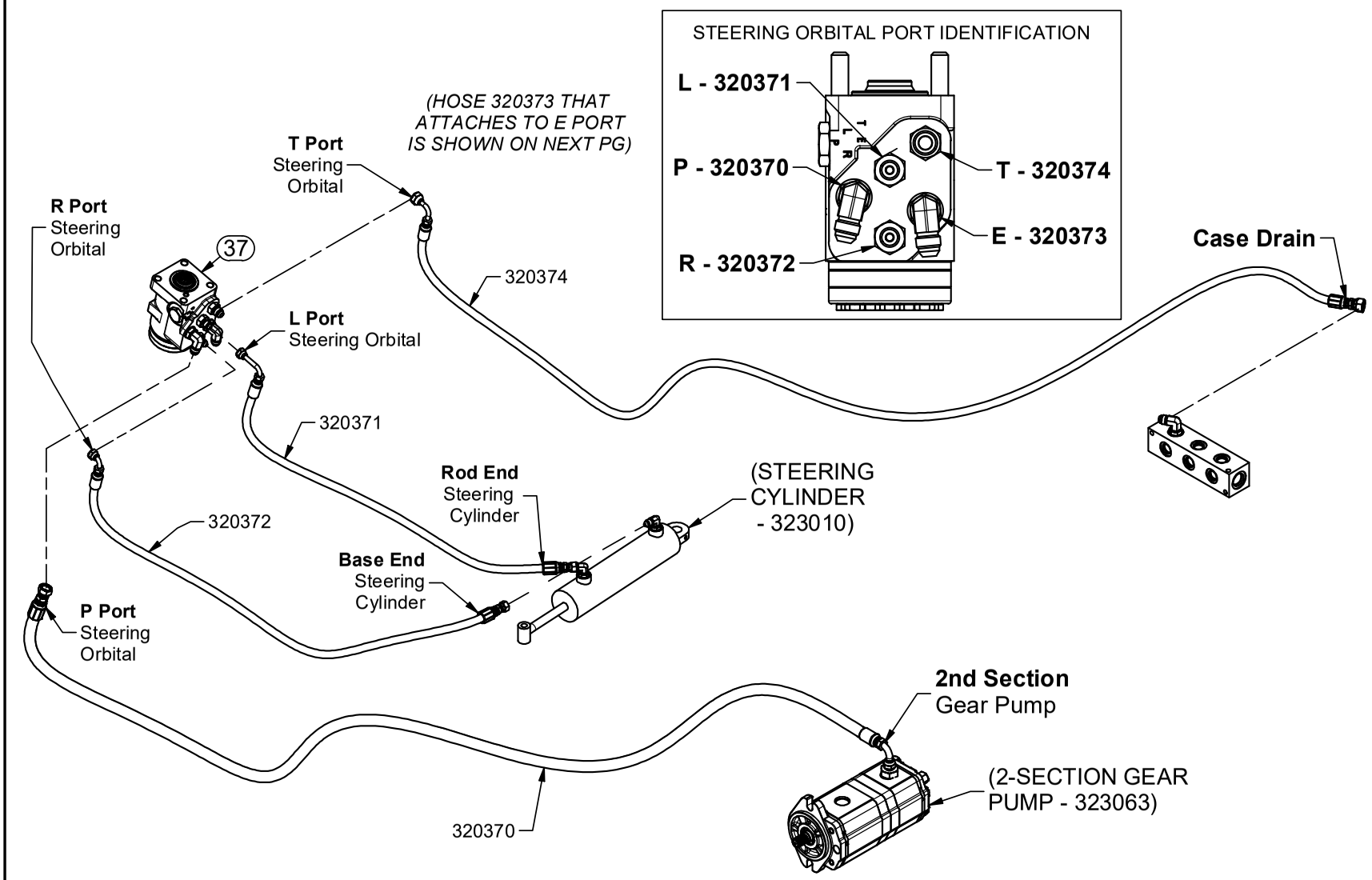

STEERING PLUMBING

5-17-2021

305098	REV: A

THREE SPOOL VALVE PLUMBING

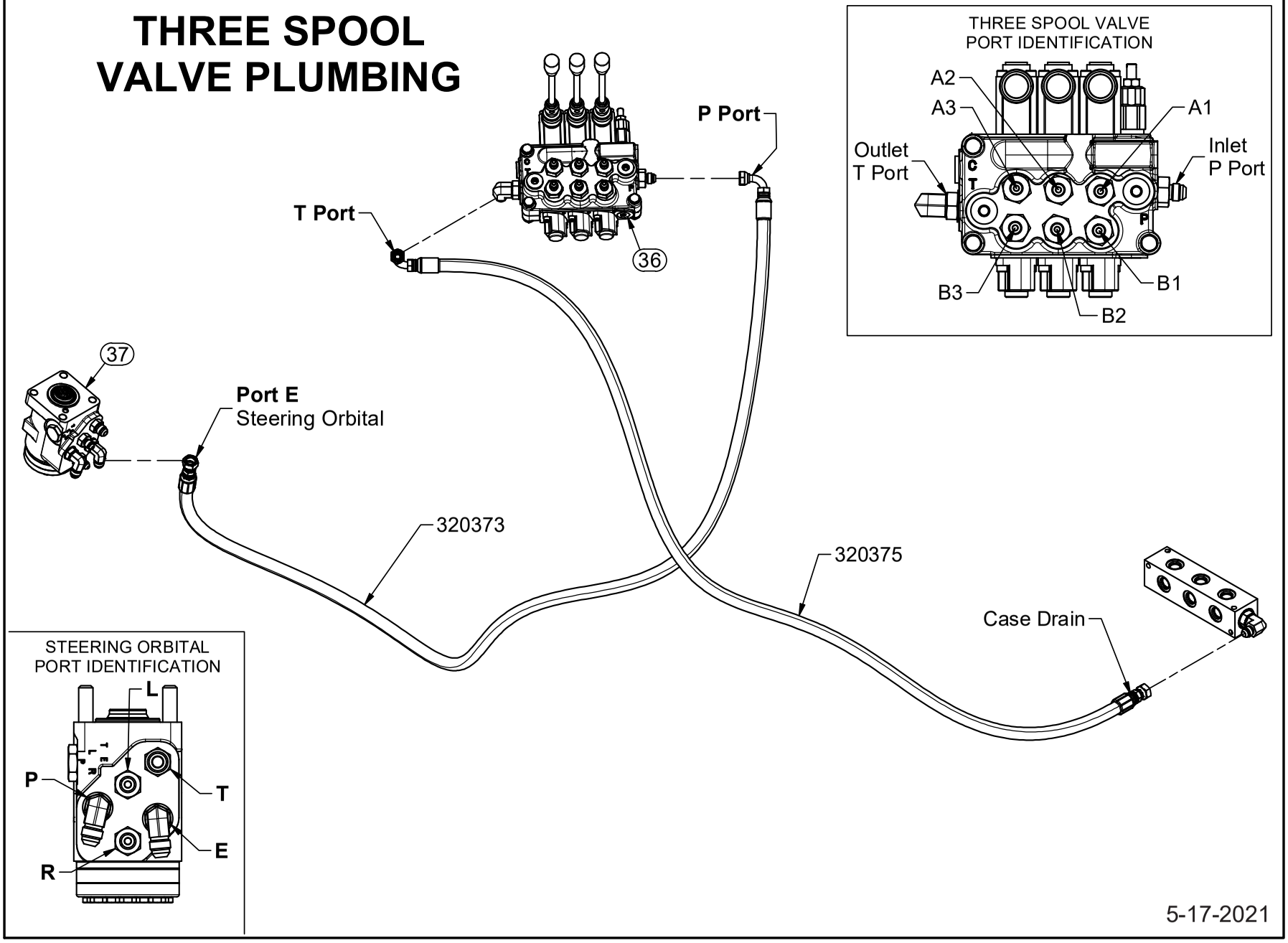

5-17-2021

305098	REV: A

DECK LIFT PLUMBING

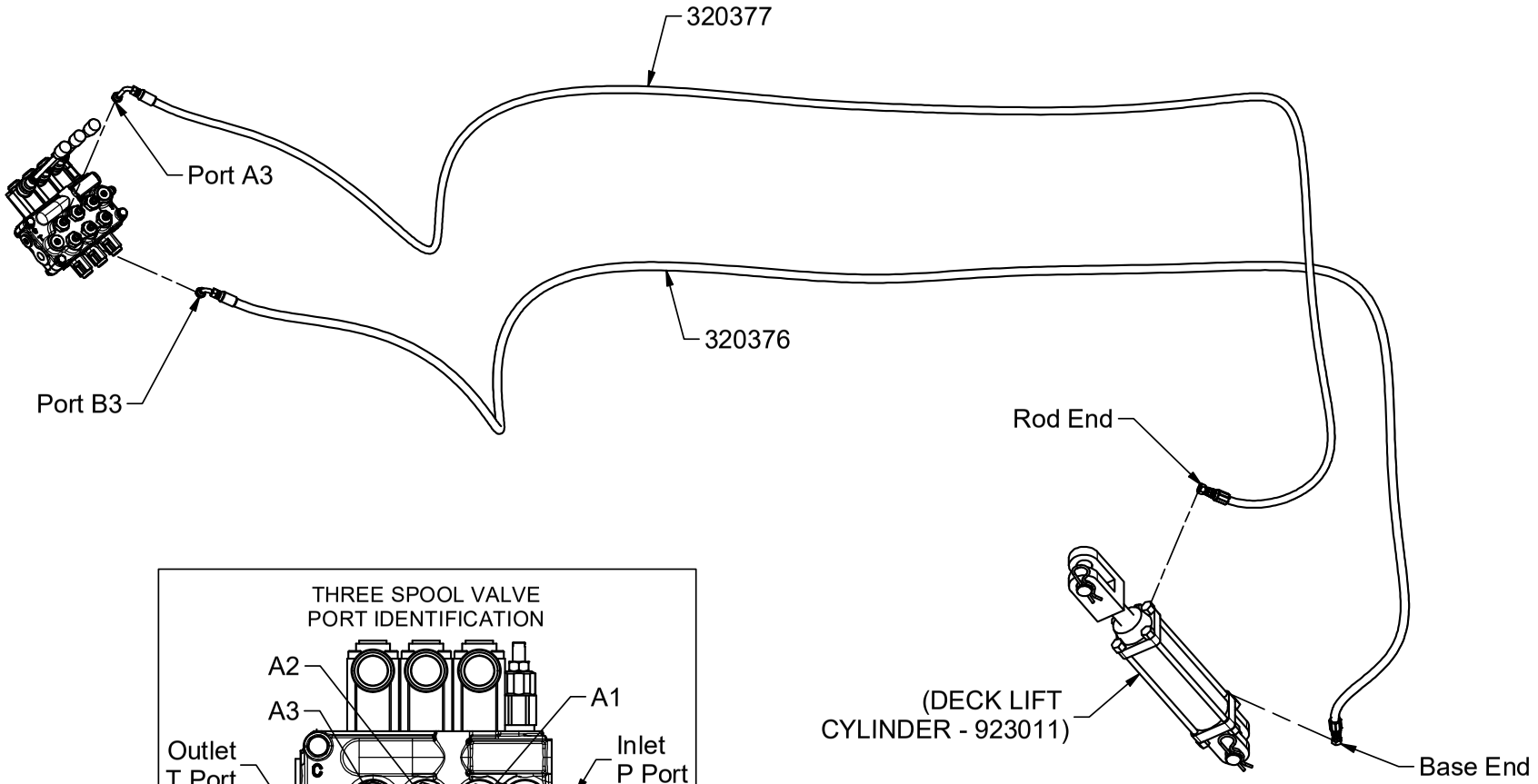

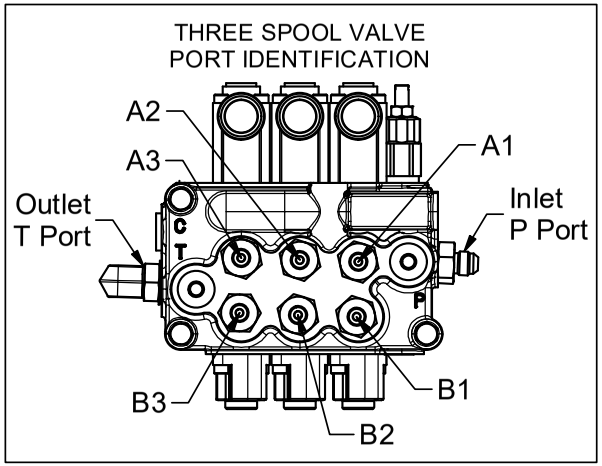

5-17-2021

305098	REV: A

HOPPER LIFT PLUMBING

(CYLINDER PLUMBING CAN BE FOUND IN HOPPER INSTALLATION - 305075)

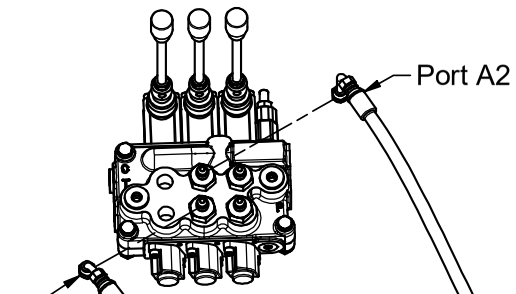

Port A2

Port B2

320379

320378

Tee Into Port 1
Lower PO
Check Valve

Port 2
Lower PO
Check Valve

THREE SPOOL VALVE
PORT IDENTIFICATION

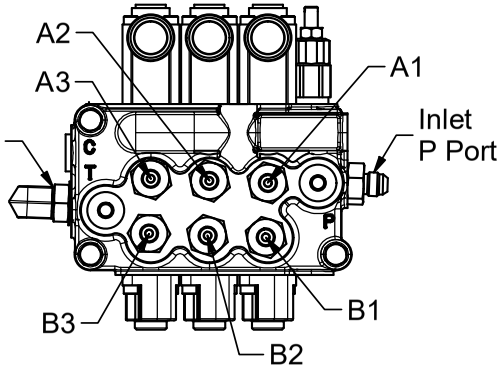

5-17-2021

305098	REV: A

HOPPER DOOR PLUMBING

(CYLINDER PLUMBING CAN BE FOUND IN HOPPER INSTALLATION - 305075)

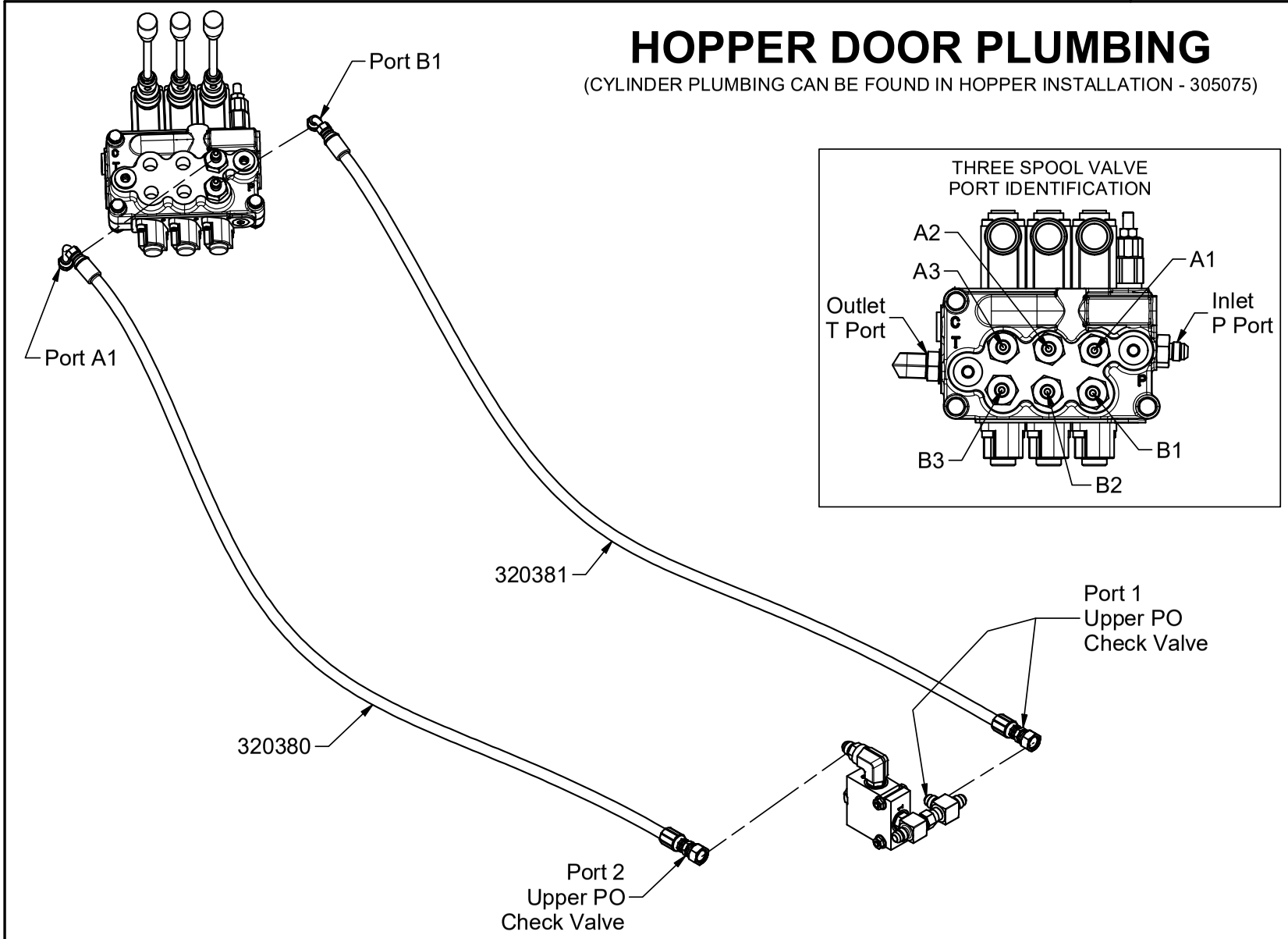

5-17-2021

SWEEPER MACHINE HYDRAULIC SCHEMATIC

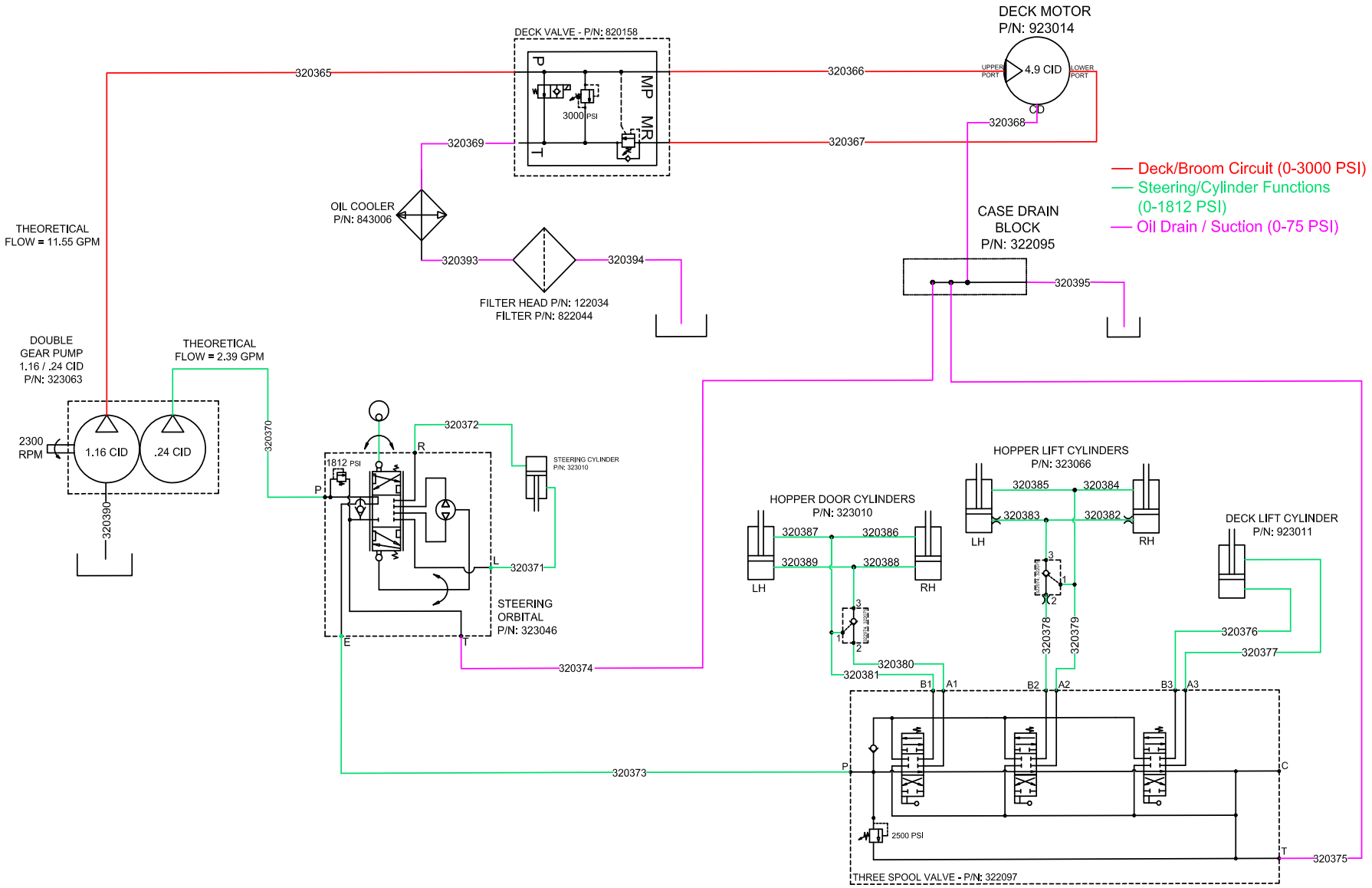

06/03/20

5-17-2021

305111	REV: NC

PADDLE ASSEMBLY

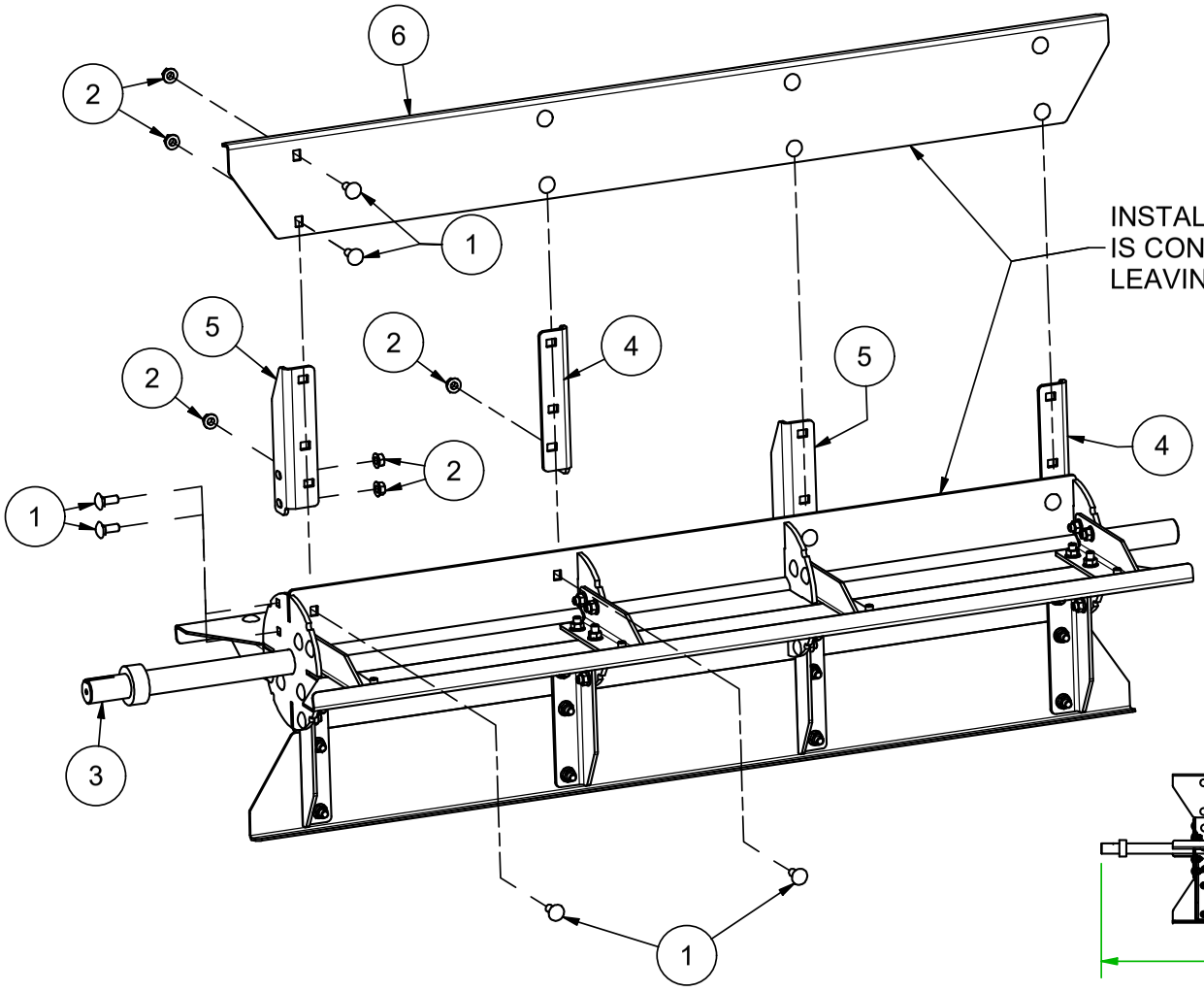

INSTALL BLADE SO EDGE
IS CONTACTING STIFFENER
LEAVING NO GAP

Parts List			
ITEM	QTY	PART #	DESCRIPTION
1	80	110556	Bolt, 3/8-16 X 1 in Carriage
2	80	110645	NUT, 3/8-16 WIZ FLANGE
3	1	315399	WELDMENT, PADDLE
4	8	317378	SUPPORT, RH PADDLE
5	8	317379	SUPPORT, LH PADDLE
6	4	317380	PADDLE, SWEEPER

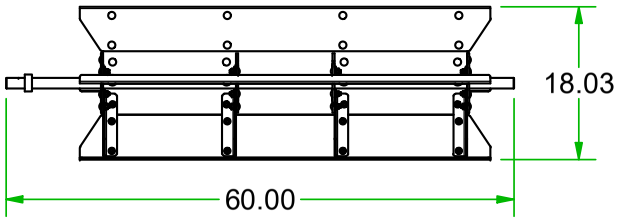

12-22-2020

Brush Assembly

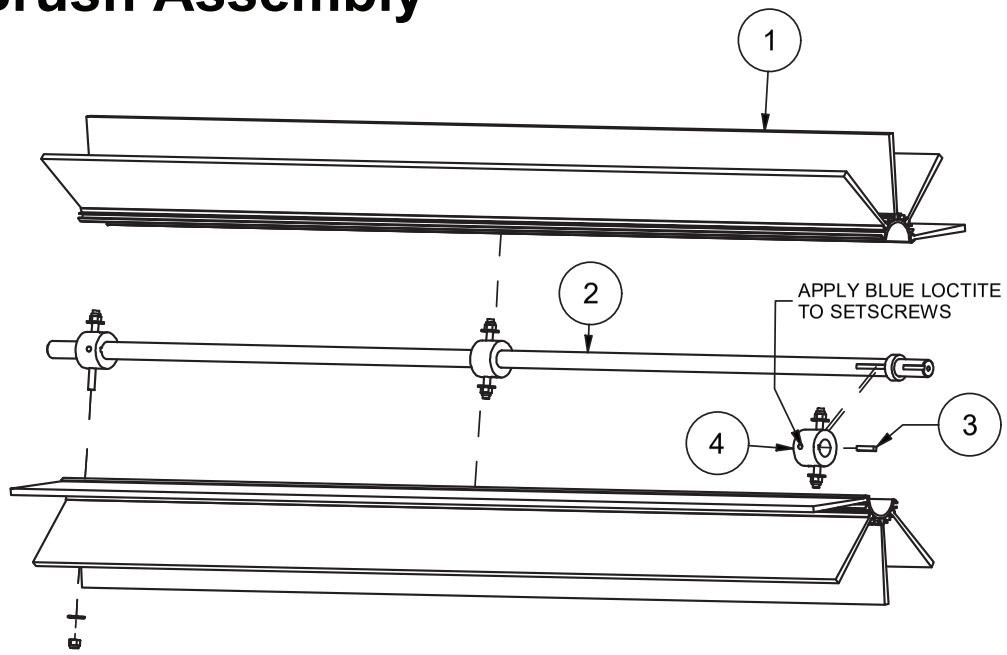

Parts List			
ITEM	QTY	PART #	DESCRIPTION
	1	302003	BRUSH, 60 in
	1	325368	WELDMENT, BROOM SHAFT
	1	510089	Key, 1/4 X 1/4 X 1.25, Under
	3	973002	FLANGE, 2 1/8 X 1, TJ-16

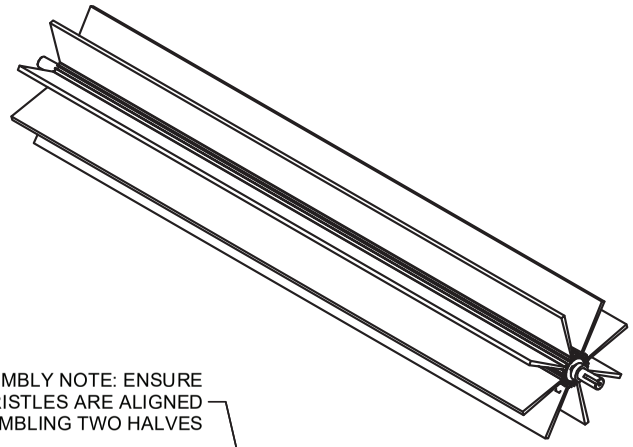

ASSEMBLY NOTE: ENSURE
BRISTLES ARE ALIGNED
WHEN ASSEMBLING TWO HALVES

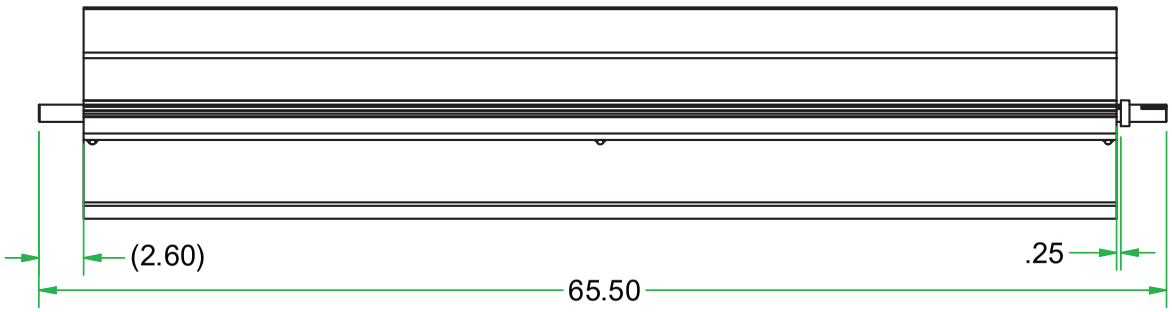

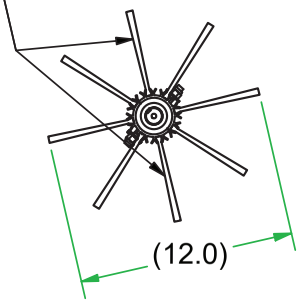

302033 has been replaced by 302170 & 411481.
See following page for replacement information.

7-15-2020

Brush Assembly

Parts List			
ITEM	QTY	PART #	DESCRIPTION
1	1	302170	Brush, Spiral Wound, 60 x 11.50 OD, .030 Poly
2	1	315368	WELDMENT, BROOM SHAFT
3	1	411481	KEY, 1/4 x 1/4 x 2.0

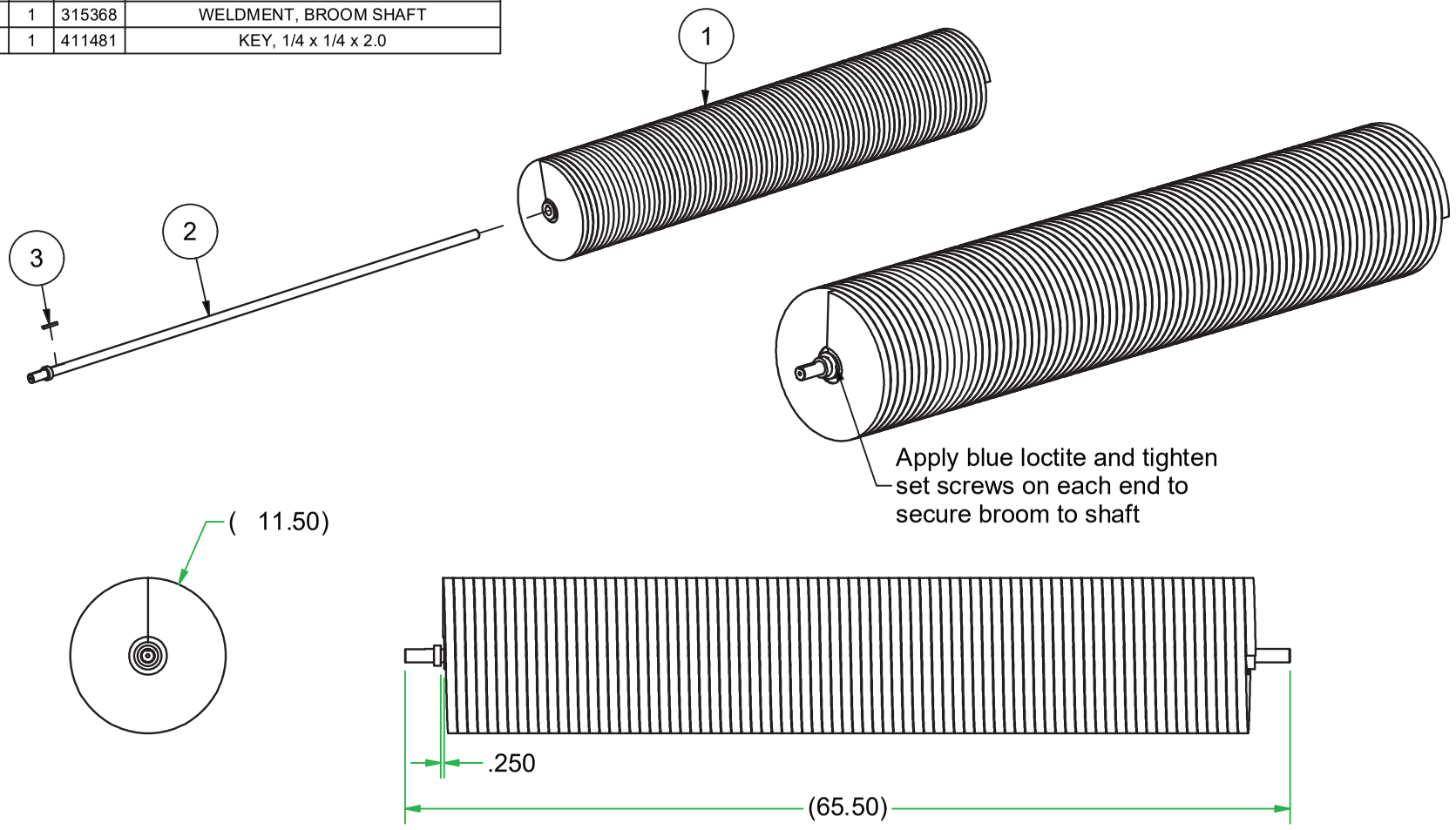

305114	REV: NC

Parts List			
ITEM	QTY	PART #	DESCRIPTION
1	1	102133	Decal, ISO, FOOT CRUSH
2	3	110010	BOLT, 1/2-13 X 9.0
3	14	110020	Bolt, 5/16-18 X 0.75 in Carriage
4	2	110023	BOLT, 5/8-11 X 6.5
5	4	110024	BOLT, 5/8-11 X 8.0
6	56	110154	Bolt, 1/4-20 X 0.75 in Carriage
7	2	110272	BOLT, 3/4-10 X 6.75, Hhcs Gr 5 Zinc
8	56	110290	NUT, 1/4-20 WIZ FLANGE
9	2	110304	PIN, LOCK 3/8 X 2.5 SQ
10	1	110335	WASHER, 1" FLAT MACHINE
11	1	110403	BOLT, 1/2-13 X 2.5
12	4	110419	BOLT, 1/2-13 X 1.75
13	6	110440	BOLT, 3/8-16 X 1, WIZ FLANGE
14	2	110459	BOLT, 5/16-18 X 1, WIZ FLANGE
15	1	110513	BOLT, 5/8-11 X 2.5
16	4	110556	Bolt, 3/8-16 X 1 in Carriage
17	1	110597	NUT, 5/8-11 HEX
18	14	110606	NUT, 5/16-18 WIZ FLANGE
19	4	110610	NUT, 1/2-13
20	4	110615	NUT, 1/2-13, UNITORQUE LOCK
21	2	110625	NUT, 3/4-10, UNITORQUE LOCK
22	6	110639	NUT, 5/8-11, UNITORQUE LOCK
23	10	110645	NUT, 3/8-16 WIZ FLANGE
24	1	110655	WASHER, 5/8" LOCK
25	8	110658	WASHER, 1/2" FLAT STANDARD
26	1	110663	WASHER, 5/8" FLAT SAE
27	4	110666	WASHER, 1/2" LOCK
28	4	110678	WASHER, 3/4 FLAT SAE
29	2	110826	NUT, 3/8-16 GR 5
30	1	110929	BOLT, M8-1.25 X 20 WIZ FLNG
31	1	110987	Pin, Square Retainer, .50 X 3.00 Pin Dia
32	1	111186	WASHER, 1.50 x .406 x .125, FLAT
33	1	111188	WASHER, 1.25 x 1.875 x .047, FLAT
34	2	112119	ROLL PIN, 5/32 X 2 ZP
35	2	112126	SPRING, COMP 3.0L x 0.6 OD x .045

Parts List			
ITEM	QTY	PART #	DESCRIPTION
36	1	112130	Clevis Pin, 3/8" x 3/4", ZINC
37	1	120233	ADAPTER, 4MJ-4MB
38	2	120251	ADAPTER, 10MJ-10MB
39	1	142002	SPRING, COMP 1 1/4 x 4 x .148
40	1	142013	Sprocket, 4017 Idler, 5/8
41	4	142019	Flange, 52mm, 2 Bolt
42	2	142023	SPROCKET, 40BS35 X 1.0
43	1	142024	SPORCKET, 40BS17 X 1.25
44	2	142025	Bearing, 52mm Spherical O.D., 1.0 ID
45	2	142026	Bearing, 62mm Spherical O.D., 1.25 ID
46	4	142027	Flange, 62mm, 2 Bolt
47	2	200029	COTTER PIN, 5/32 X 1
48	1	302112	SKIRT, FRONT DECK
49	1	302113	SKIRT, REAR DECK
50	2	302114	SKIRT, SIDE DECK
51	1	302115	SEAL, FRONT DECK
52	1	302116	SEAL, REAR TRANSITION
53	2	302117	SEAL, SIDE DECK
54	1	302146	Decal, Tension Adjustment
55	1	305068	ASSY, BRUSH
56	1	305102	Assy, Transition Shield, ISO
57	1	305111	ASSY, PADDLE
58	2	312015	PIN, 5/8" x 3.5"
59	2	315339	WELDMENT, UPPER WHEEL ADJUST
60	2	315340	WELDMENT, LOWER WHEEL ADJUST
61	2	315341	WELDMENT, GAUGE WHEEL BRKT
62	1	315377	WELDMENT, SWEEPER DRIVE IDLER
63	1	315378	WELDMENT, IDLER ADJUSTMENT
64	3	315392	WELDMENT, ANTI-SCALP WHEEL MOUNT
65	1	315408	WELDMENT, SWEEPER DECK, US
66	2	317249	PIN, QUICK RELEASE
67	4	317252	RETAINER, FRONT DECK
68	2	317253	RETAINER, SIDE DECK
69	1	317256	SPACER, KEYWAY, 1.625 X .5 X .909

Parts List			
ITEM	QTY	PART #	DESCRIPTION
70	3	317258	WASHER, 2.0 X .344 X .12
71	1	317261	TENSIONER, GEAR MOUNT
72	2	317289	RETAINER, UPPER SIDE SEAL
73	1	317295	COLLAR, SPRING TENSIONER
74	1	317311	LINER, DECK
75	1	317337	Shield, Broom Bearing
76	1	317365	ROD, DECK PROP
77	1	340013	ROLLER CHAIN, #40 DECK (53")
78	3	510047	Roller, Anti-Scalp
79	2	510228	KEY, 1/4 X 1/4 X 1.0 UNDER
80	2	510237	CASTER WHEEL ASSY, 9 X 3.5-4
81	1	510249	COTTER PIN, 1/8 X 0.75
82	4	800128	BUSHING, IGUS, FOOT PEDAL
83	1	902228	Decal, Do Not Remove Shield
84	1	902230	Decal, Shaft Hazard
85	1	902232	Decal, High Pressure Injection
86	4	910865	SPACER, 1.125 X .812 X .9375
87	1	923014	MOTOR, 4.9 CID

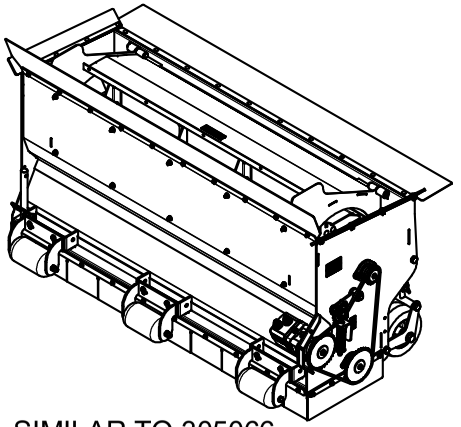

SIMILAR TO 305066

DECK ASSEMBLY

3-16-2021

305114	REV: NC

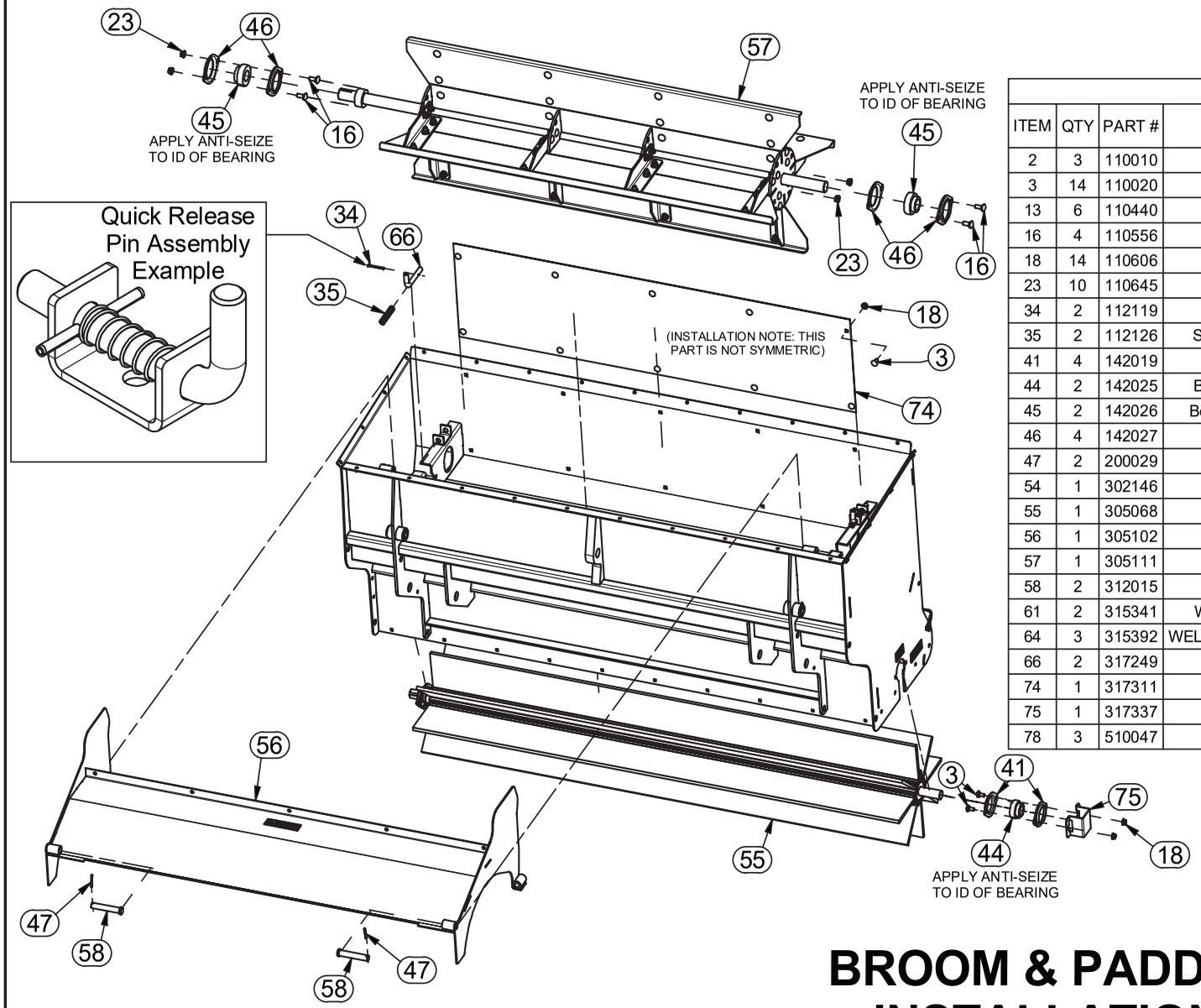

Parts List			
ITEM	QTY	PART #	DESCRIPTION
2	3	110010	BOLT, 1/2-13 X 9.0
3	14	110020	Bolt, 5/16-18 X 0.75 in Carriage
13	6	110440	BOLT, 3/8-16 X 1, WIZ FLANGE
16	4	110556	Bolt, 3/8-16 X 1 in Carriage
18	14	110606	NUT, 5/16-18 WIZ FLANGE
23	10	110645	NUT, 3/8-16 WIZ FLANGE
34	2	112119	ROLL PIN, 5/32 X 2 ZP
35	2	112126	SPRING, COMP 3.0L x 0.6 OD x .045
41	4	142019	Flange, 52mm, 2 Bolt
44	2	142025	Bearing, 52mm Spherical O.D., 1.0 ID
45	2	142026	Bearing, 62mm Spherical O.D., 1.25 ID
46	4	142027	Flange, 62mm, 2 Bolt
47	2	200029	COTTER PIN, 5/32 X 1
54	1	302146	Decal, Tension Adjustment
55	1	305068	ASSY, BRUSH
56	1	305102	Assy, Transition Shield, ISO
57	1	305111	ASSY, PADDLE
58	2	312015	PIN, 5/8" x 3.5"
61	2	315341	WELDMENT, GAUGE WHEEL BRKT
64	3	315392	WELDMENT, ANTI-SCALP WHEEL MOUNT
66	2	317249	PIN, QUICK RELEASE
74	1	317311	LINER, DECK
75	1	317337	Shield, Broom Bearing
78	3	510047	Roller, Anti-Scalp

BROOM & PADDLE INSTALLATION

305068 has been replaced by 305134.
See "Brush Assembly" for reference.

3-16-2021

305114	REV: NC

Parts List

ITEM	QTY	PART #	DESCRIPTION
1	1	102133	Decal, ISO, FOOT CRUSH
2	3	110010	BOLT, 1/2-13 X 9.0
4	2	110023	BOLT, 5/8-11 X 6.5
5	4	110024	BOLT, 5/8-11 X 8.0
7	2	110272	BOLT, 3/4-10 X 6.75, Hhcs Gr 5 Zinc
8	56	110290	NUT, 1/4-20 WIZ FLANGE
9	2	110304	PIN, LOCK 3/8 X 2.5 SQ
13	6	110440	BOLT, 3/8-16 X 1, WIZ FLANGE
21	2	110625	NUT, 3/4-10, UNITORQUE LOCK
22	6	110639	NUT, 5/8-11, UNITORQUE LOCK
28	4	110678	WASHER, 3/4 FLAT SAE
49	1	302113	SKIRT, REAR DECK
50	2	302114	SKIRT, SIDE DECK
54	1	302146	Decal, Tension Adjustment
59	2	315339	WELDMENT, UPPER WHEEL ADJUST
60	2	315340	WELDMENT, LOWER WHEEL ADJUST
61	2	315341	WELDMENT, GAUGE WHEEL BRKT
64	3	315392	WELDMENT, ANTI-SCALP WHEEL MOUNT
67	4	317252	RETAINER, FRONT DECK
68	2	317253	RETAINER, SIDE DECK
78	3	510047	Roller, Anti-Scalp
80	2	510237	CASTER WHEEL ASSY, 9 X 3.5-4
82	4	800128	BUSHING, IGUS, FOOT PEDAL
83	1	902228	Decal, Do Not Remove Shield
86	4	910865	SPACER, 1.125 X .812 X .9375

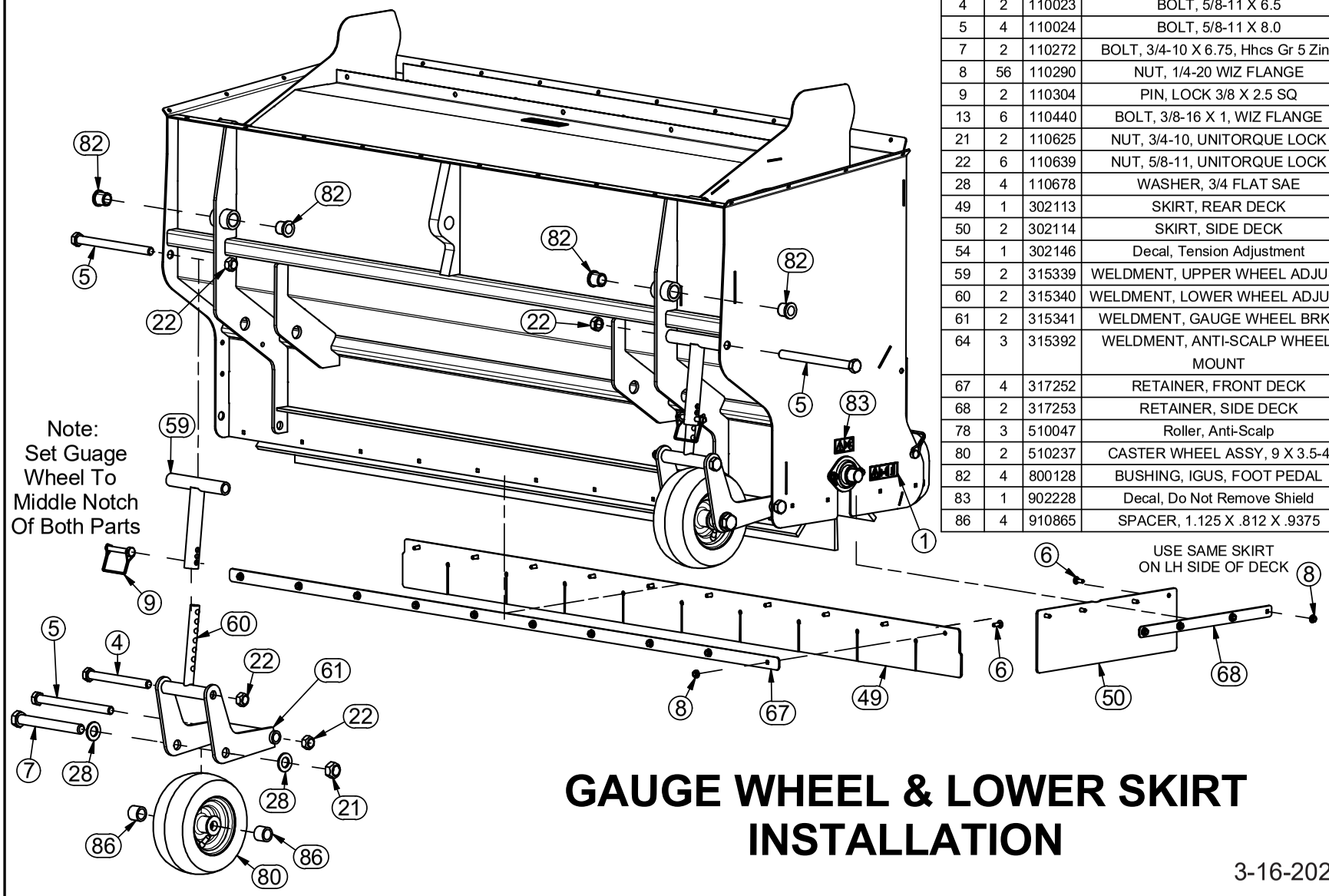

GAUGE WHEEL & LOWER SKIRT INSTALLATION

3-16-2021

305114	REV: NC

HYDRAULIC MOTOR, SCALP WHEELS & LOWER SKIRT INSTALLATION

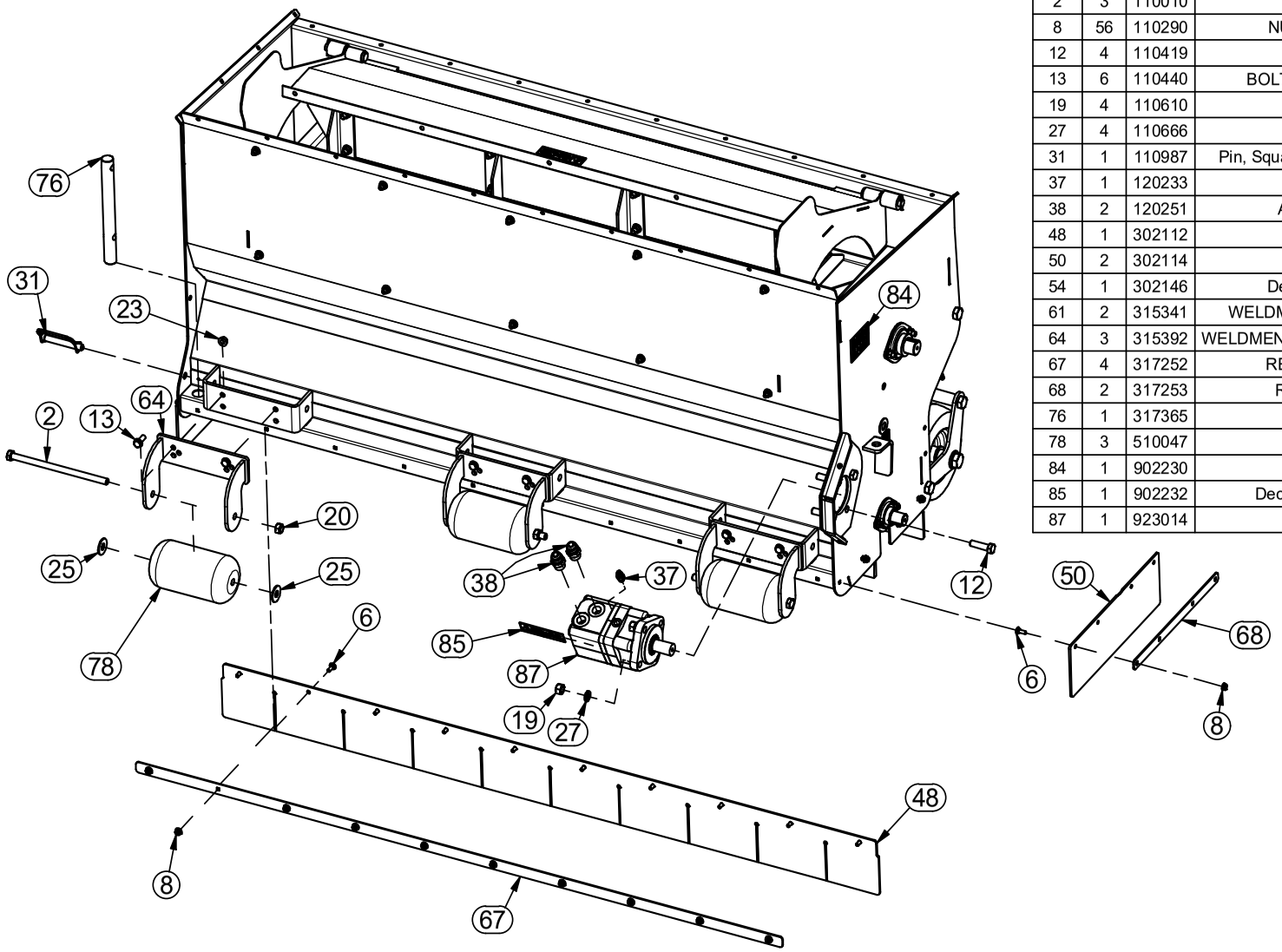

Parts List			
ITEM	QTY	PART #	DESCRIPTION
2	3	110010	BOLT, 1/2-13 X 9.0
8	56	110290	NUT, 1/4-20 WIZ FLANGE
12	4	110419	BOLT, 1/2-13 X 1.75
13	6	110440	BOLT, 3/8-16 X 1, WIZ FLANGE
19	4	110610	NUT, 1/2-13
27	4	110666	WASHER, 1/2" LOCK
31	1	110987	Pin, Square Retainer, .50 X 3.00 Pin Dia
37	1	120233	ADAPTER, 4MJ-4MB
38	2	120251	ADAPTER, 10MJ-10MB
48	1	302112	SKIRT, FRONT DECK
50	2	302114	SKIRT, SIDE DECK
54	1	302146	Decal, Tension Adjustment
61	2	315341	WELDMENT, GAUGE WHEEL BRKT
64	3	315392	WELDMENT, ANTI-SCALP WHEEL MOUNT
67	4	317252	RETAINER, FRONT DECK
68	2	317253	RETAINER, SIDE DECK
76	1	317365	ROD, DECK PROP
78	3	510047	Roller, Anti-Scalp
84	1	902230	Decal, Shaft Hazard
85	1	902232	Decal, High Pressure Injection
87	1	923014	MOTOR, 4.9 CID

3-16-2021

305114	REV: NC

UPPER DECK SEAL & PADDLE SHIELD INSTALLATION

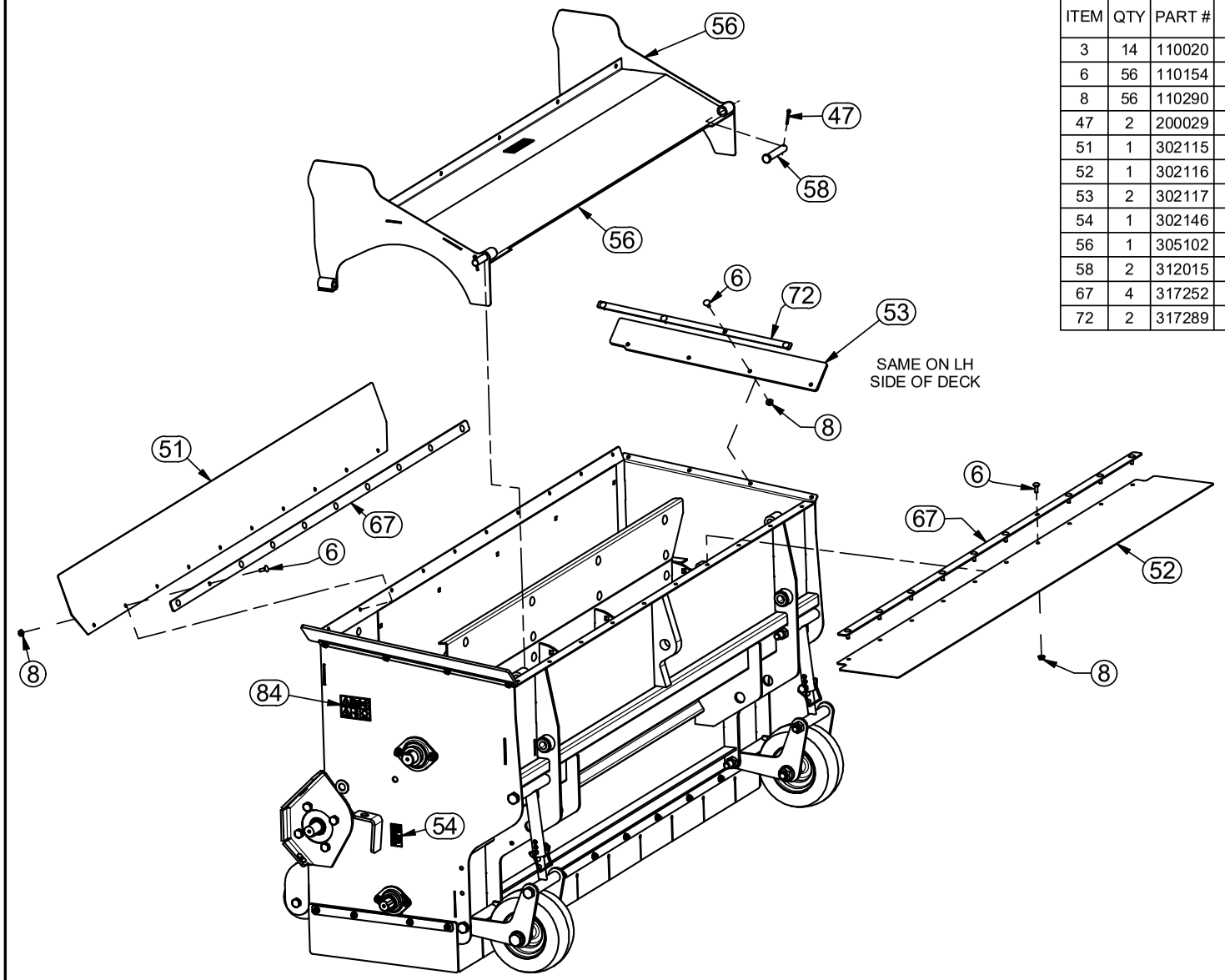

Parts List			
ITEM	QTY	PART #	DESCRIPTION
3	14	110020	Bolt, 5/16-18 X 0.75 in Carriage
6	56	110154	Bolt, 1/4-20 X 0.75 in Carriage
8	56	110290	NUT, 1/4-20 WIZ FLANGE
47	2	200029	COTTER PIN, 5/32 X 1
51	1	302115	SEAL, FRONT DECK
52	1	302116	SEAL, REAR TRANSITION
53	2	302117	SEAL, SIDE DECK
54	1	302146	Decal, Tension Adjustment
56	1	305102	Assy, Transition Shield, ISO
58	2	312015	PIN, 5/8" x 3.5"
67	4	317252	RETAINER, FRONT DECK
72	2	317289	RETAINER, UPPER SIDE SEAL

3-16-2021

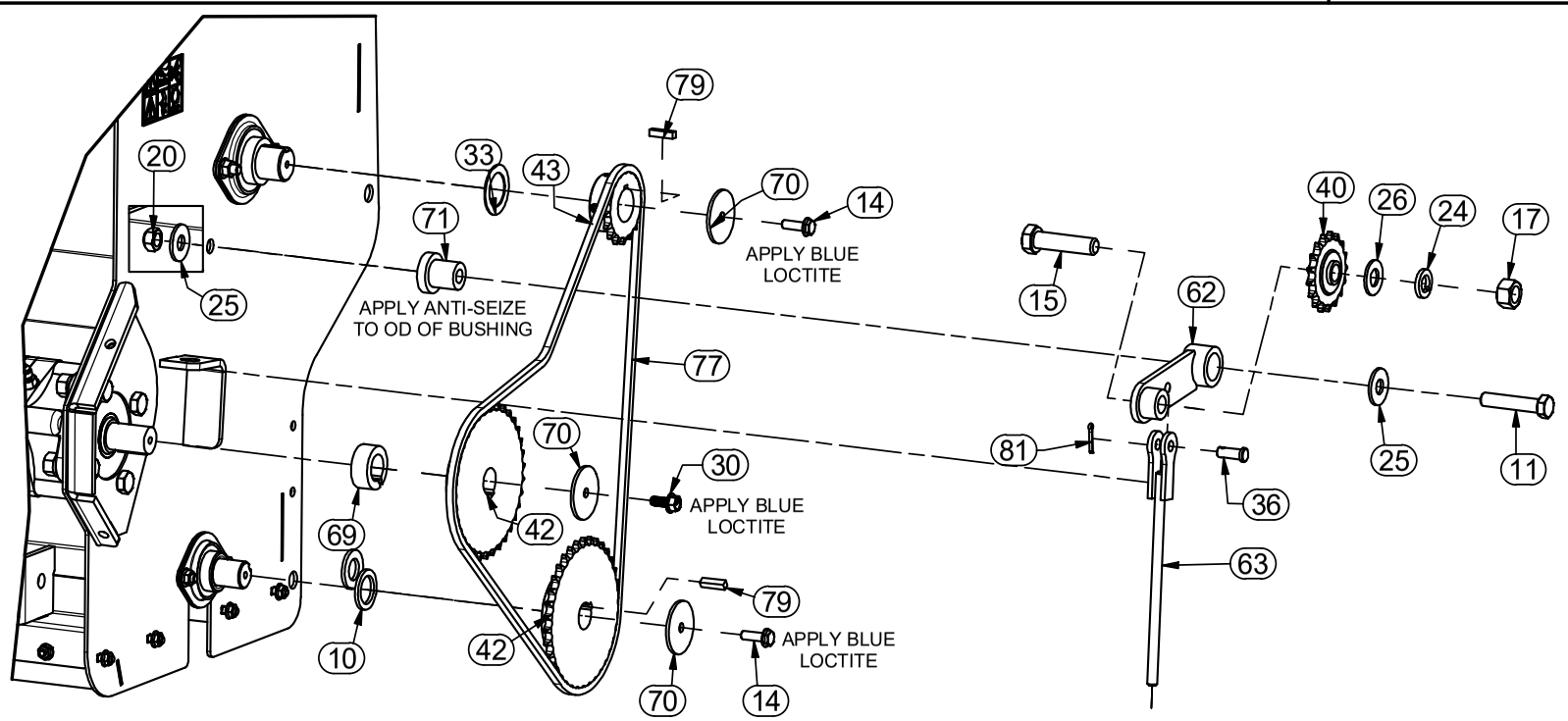

INSTALLATION: TIGHTEN NUT UNTIL FLAT WASHER CONTACTS COLLAR, THEN TIGHTEN JAM NUT

Parts List			Parts List		
ITEM	PART #	DESCRIPTION	ITEM	PART #	DESCRIPTION
1	102133	Decal, ISO, FOOT CRUSH	36	112130	Clevis Pin, 3/8" x 3/4", ZINC
2	110010	BOLT, 1/2-13 X 9.0	39	142002	SPRING, COMP 1 1/4 x 4 x .148
10	110335	WASHER, 1" FLAT MACHINE	40	142013	Sprocket, 4017 Idler, 5/8
11	110403	BOLT, 1/2-13 X 2.5	42	142023	SPROCKET, 40BS35 X 1.0
13	110440	BOLT, 3/8-16 X 1, WIZ FLANGE	43	142024	SPORCKET, 40BS17 X 1.25
14	110459	BOLT, 5/16-18 X 1, WIZ FLANGE	54	302146	Decal, Tension Adjustment
15	110513	BOLT, 5/8-11 X 2.5	62	315377	WELDMENT, SWEEPER DRIVE IDLER
17	110597	NUT, 5/8-11 HEX	63	315378	WELDMENT, IDLER ADJUSTMENT
20	110615	NUT, 1/2-13, UNITORQUE LOCK	64	315392	WELDMENT, ANTI-SCALP WHEEL
24	110655	WASHER, 5/8" LOCK			MOUNT
25	110658	WASHER, 1/2" FLAT STANDARD	70	317258	WASHER, 2.0 X .344 X .12
26	110663	WASHER, 5/8" FLAT SAE	71	317261	TENSIONER, GEAR MOUNT
28	110678	WASHER, 3/4 FLAT SAE	73	317295	COLLAR, SPRING TENSIONER
29	110826	NUT, 3/8-16 GR 5	77	340013	ROLLER CHAIN, #40 DECK (53")
30	110929	BOLT, M8-1.25 X 20 WIZ FLNG	78	510047	Roller, Anti-Scalp
32	111186	WASHER, 1.50 x .406 x .125, FLAT	79	510228	KEY, 1/4 X 1/4 X 1.0 UNDER
33	111188	WASHER, 1.25 x 1.875 x .047, FLAT	81	510249	COTTER PIN, 1/8 X 0.75

CHAIN DRIVE ASSEMBLY

3-16-2021

305115	REV: NC

Parts List			
ITEM	QTY	PART #	DESCRIPTION
1	15'	102004	D-Seal, Rubber 1.00" x 1.00"
2	10	110020	Bolt, 5/16-18 X 0.75 in Carriage
3	10	110606	NUT, 5/16-18 WIZ FLANGE
4	1	110941	GROMMET - 1/2 ID X 1-1/4 OD, 1/16 X 1
5	1	315409	WELDMENT, SWEEPER TRANSITION, US
6	1	317311	LINER, DECK

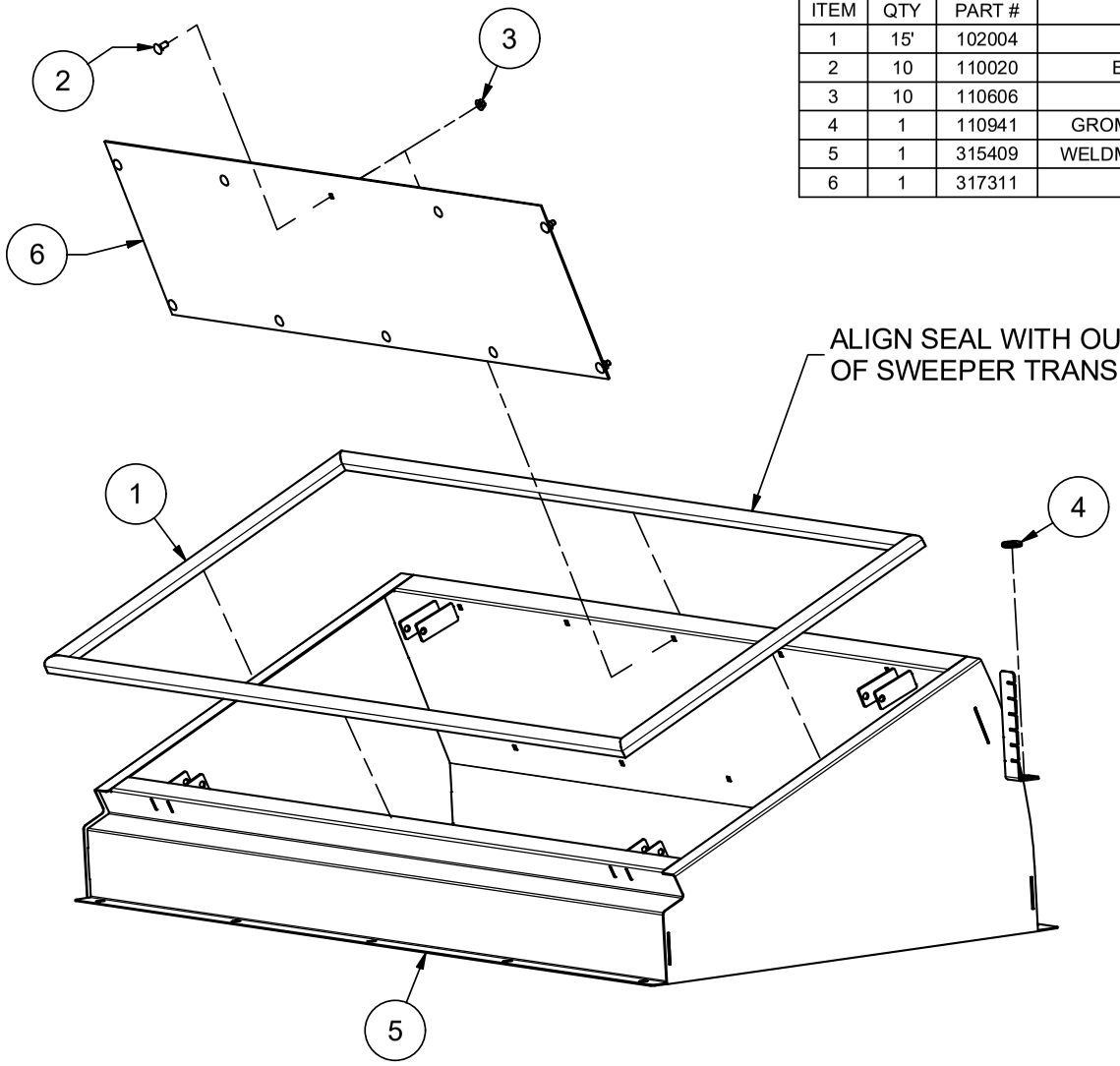

SIMILAR TO 305069

DECK TRANSITION ASSEMBLY

3-16-2021

305070	REV: B

Parts List			
ITEM	QTY	PART #	DESCRIPTION
1	8'	102004	D-Seal, Rubber 1.00" x 1.00"
2	8	110154	Bolt, 1/4-20 X 0.75 in Carriage
3	8	110290	NUT, 1/4-20 WIZ FLANGE
4	2	302147	SEAL, RETURN AIR SIDE
5	1	315370	WELDMENT, DEBRIS DEFLECTOR
6	2	317253	RETAINER, SIDE DECK

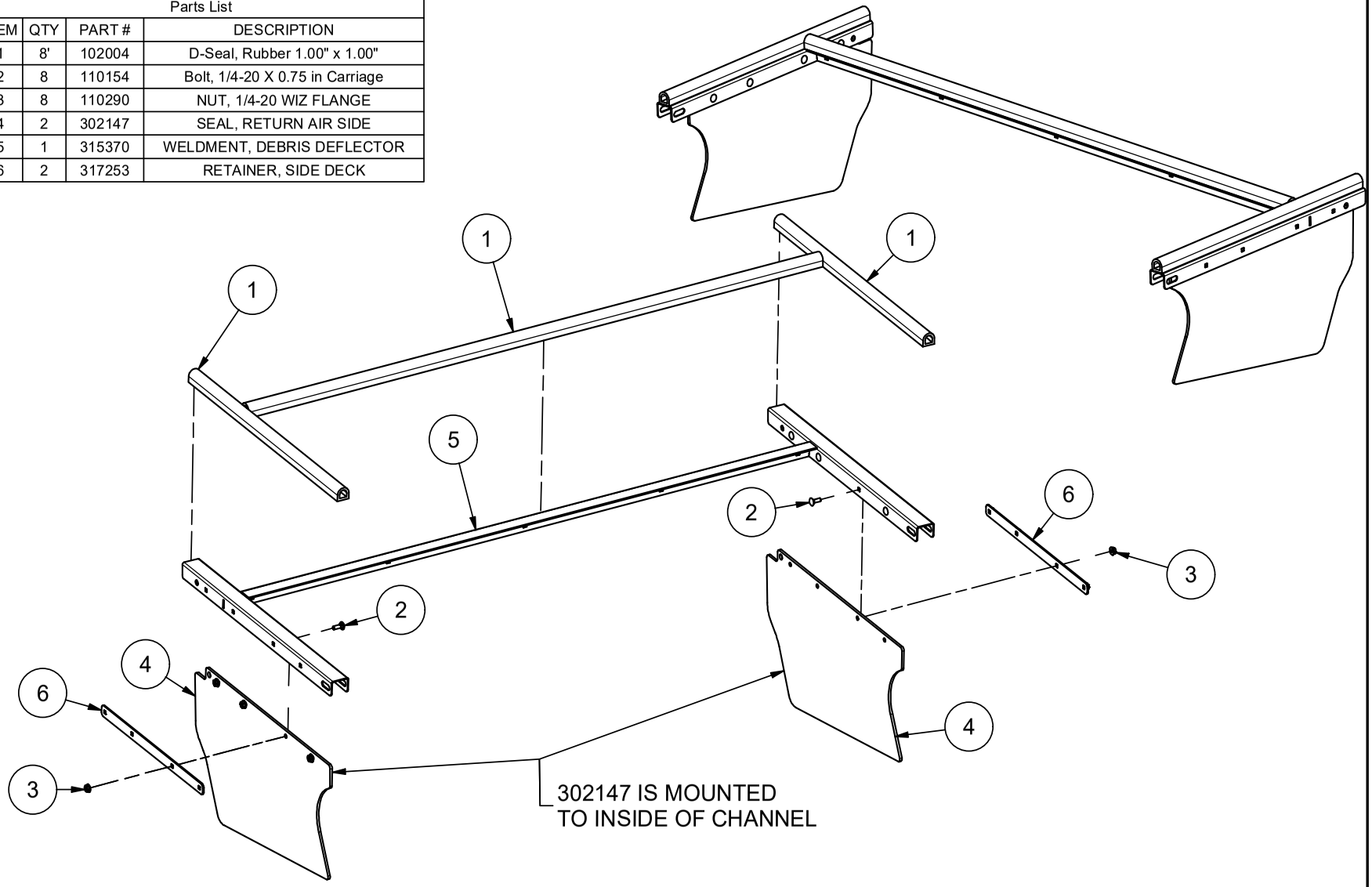

CHUTE ASSEMBLY

10-2-2020

DECK INSTALLATION

Parts List			
ITEM	QTY	PART #	DESCRIPTION
1	2	100465	COTTER PIN, 3/16 X 1.75
2	6	110003	BOLT, 1/2-13 X 4.0
3	10	110020	Bolt, 5/16-18 X 0.75 in Carriage
4	2	110155	WASHER, 3/8" FLAT SAE
5	4	110170	BOLT, 3/4-10 X 4.5
6	4	110304	PIN, LOCK 3/8 X 2.5 SQ
7	4	110395	BOLT, 3/8-16 X 1.0 SHCS
8	14	110444	BOLT, 5/16-18 X 0.75, WIZ FLANGE
9	14	110606	NUT, 5/16-18 WIZ FLANGE
10	6	110615	NUT, 1/2-13, UNITORQUE LOCK
11	4	110625	NUT, 3/4-10, UNITORQUE LOCK
12	4	110645	NUT, 3/8-16 WIZ FLANGE
13	8	110851	BUSHING - IGUS, 1-1/4 x 1 x 3/4 fng
14	2	120220	ADAPTER, 4MJ-6MB90
15	2	200029	COTTER PIN, 5/32 X 1
16	1	220480	PIN
17	4	302130	Spring, 300lb Rubber
18	1	302148	Seal, Loop
19	1	305070	ASSY, DECK CHUTE
20	1	305114	ASSY, DECK, US
21	1	305115	ASSY, DECK TRANSITION, US
22	1	315315	WELDMENT, HOPPER MOUNT
23	2	315346	WELDMENT, UPPER DECK LINK
24	2	315373	WELDMENT, LOWER DECK PIN, 4.50
25	2	315374	WELDMENT, RUBBER SPRING
26	2	315375	WELDMENT, LOWER DECK LINK
27	2	315376	WELDMENT, LOWER DECK PIN, 6.25
28	1	317179	CUTOFF, AIR FLOW
29	1	317267	ROD, DECK HEIGHT INDICATOR
30	1	317282	LINK, DECK LIFT
31	1	317357	Guide, Loop Seal
32	4	800128	BUSHING, IGUS, FOOT PEDAL
33	1	923011	Cylinder, 2 X 6, -6 SAE Cross

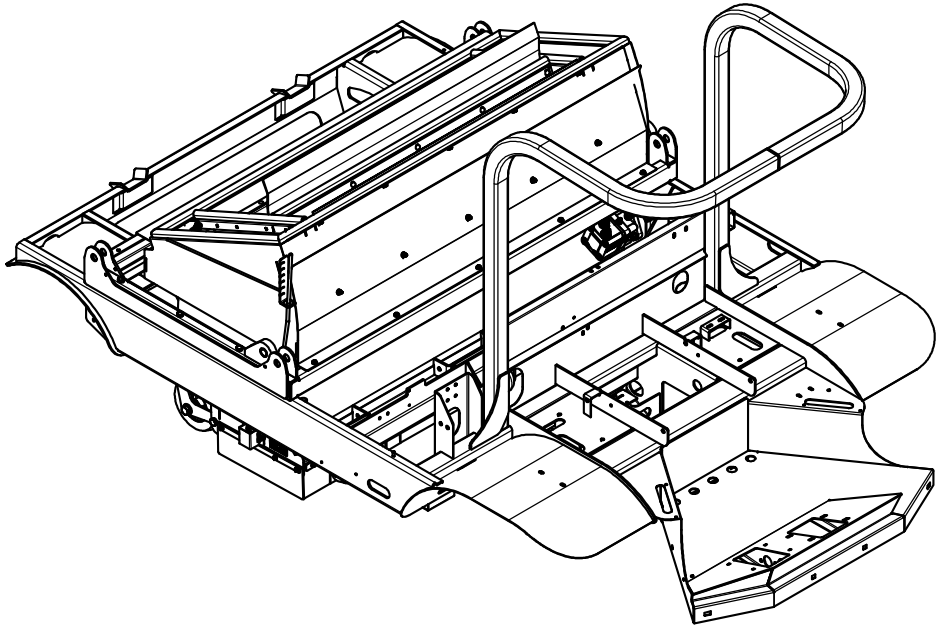

SIMILAR TO 305085

5-17-2021

305118	REV: NC

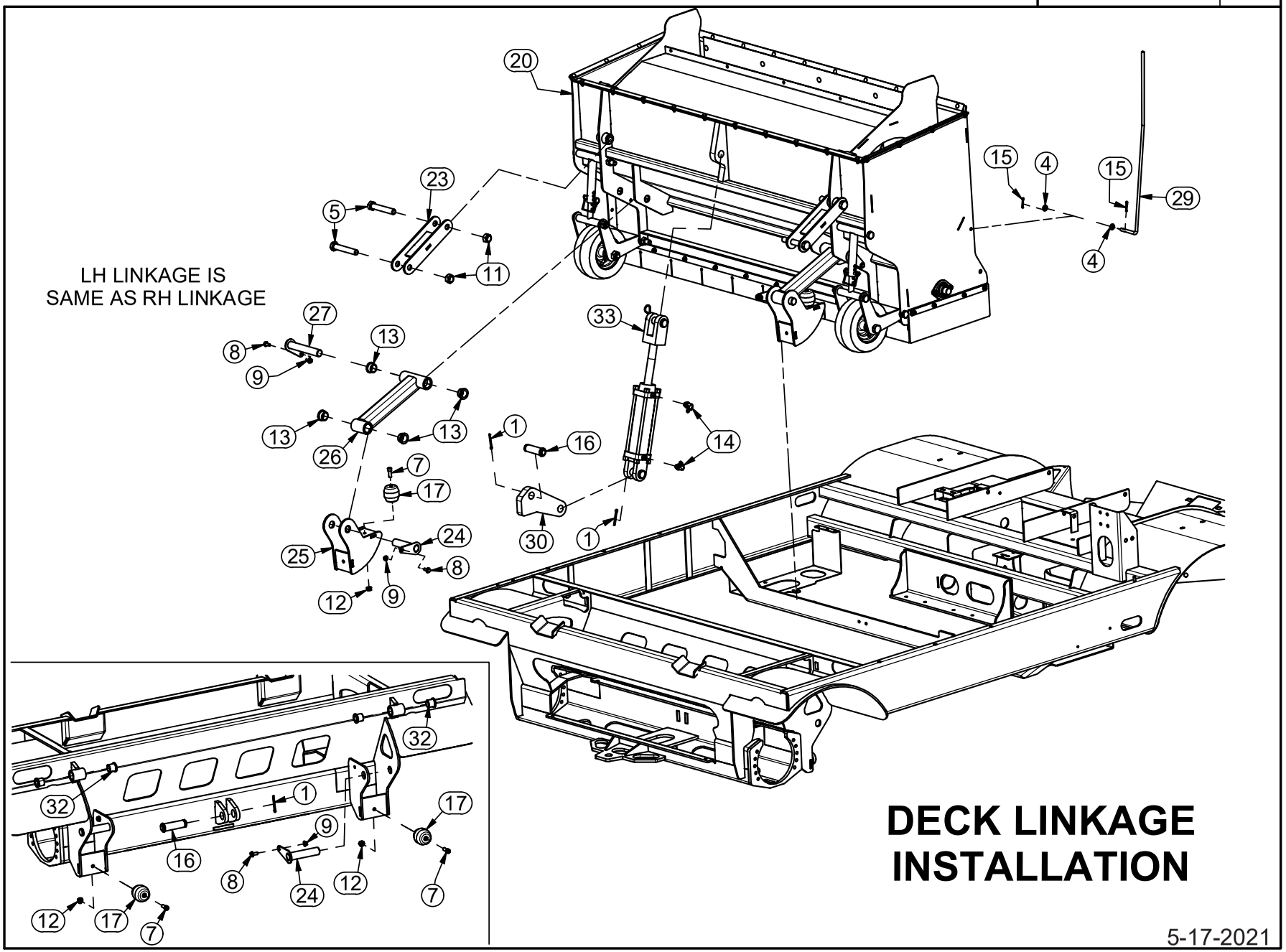

DECK LINKAGE INSTALLATION

5-17-2021

HOPPER TRANSITION & HOPPER MOUNT INSTALLATION

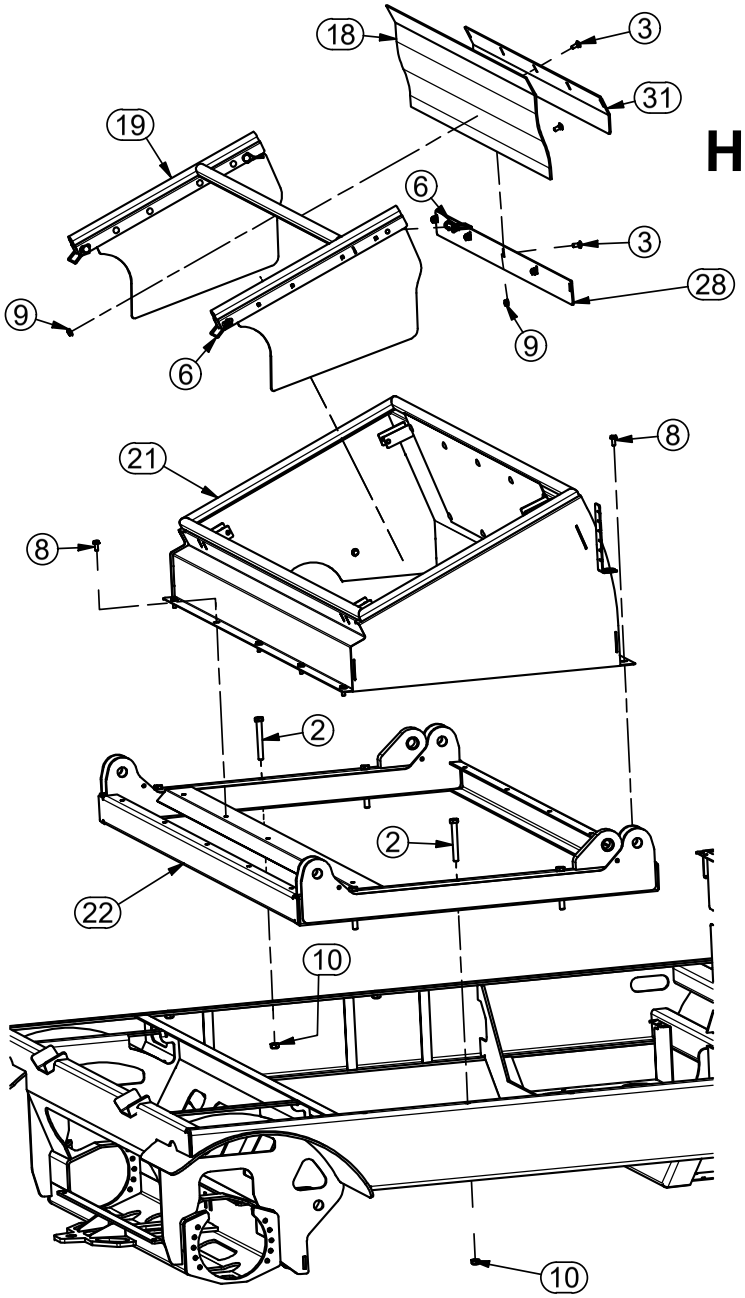

NOTE: 28 MOUNTS TO PADDLE SHIELD
POSITION CUTOFF POINT $\frac{1}{4}$" ABOVE PADDLES

Parts List			
ITEM	QTY	PART #	DESCRIPTION
2	6	110003	BOLT, 1/2-13 X 4.0
3	10	110020	Bolt, 5/16-18 X 0.75 in Carriage
6	4	110304	PIN, LOCK 3/8 X 2.5 SQ
8	14	110444	BOLT, 5/16-18 X 0.75, WIZ FLANGE
9	14	110606	NUT, 5/16-18 WIZ FLANGE
10	6	110615	NUT, 1/2-13, UNITORQUE LOCK
18	1	302148	Seal, Loop
21	1	305115	ASSY, DECK TRANSITION, US
19	1	305070	ASSY, DECK CHUTE
22	1	315315	WELDMENT, HOPPER MOUNT
28	1	317179	CUTOFF, AIR FLOW
31	1	317357	Guide, Loop Seal

5-17-2021

305065

HOPPER SHIELD ASSEMBLY

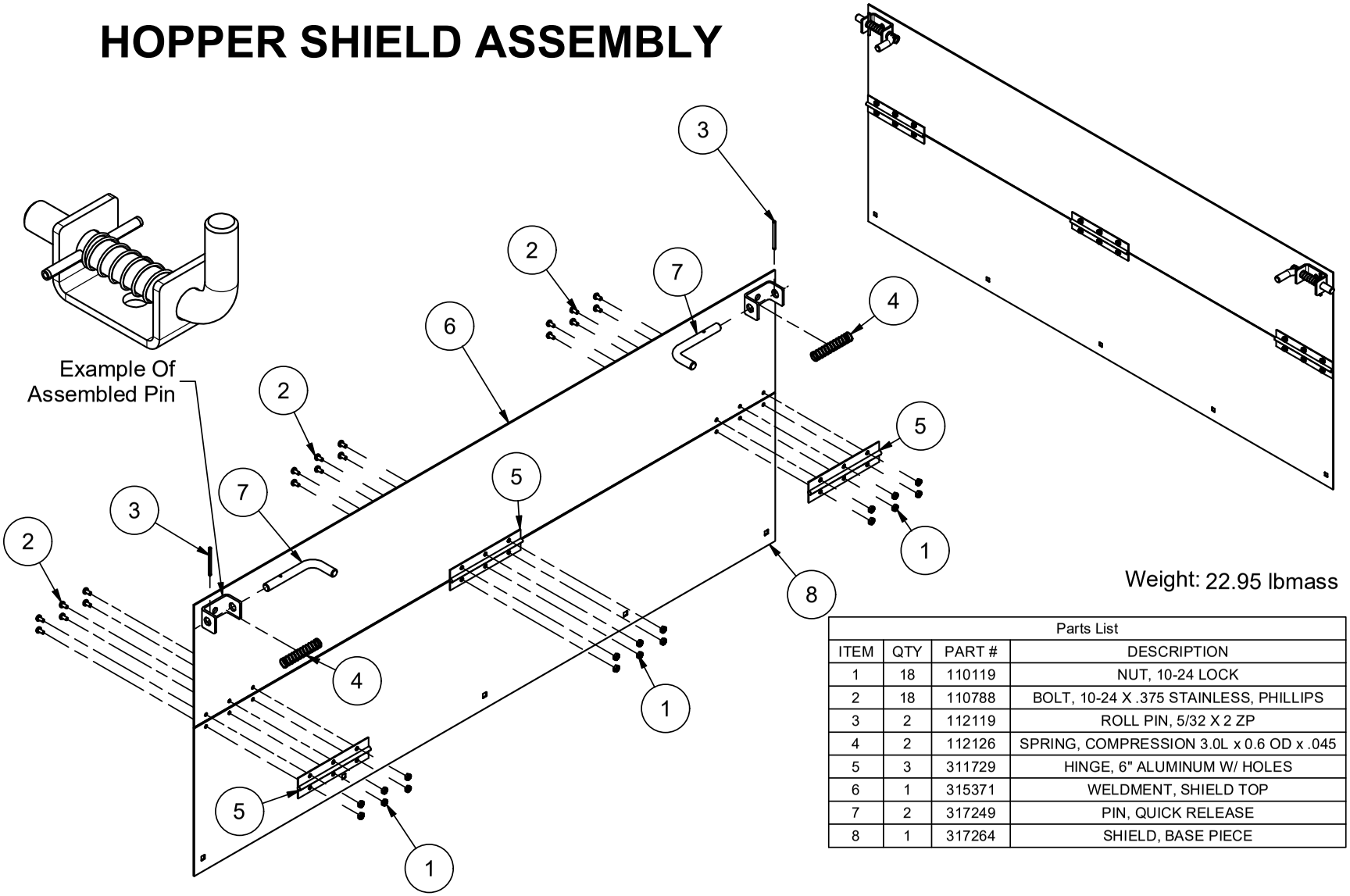

Weight: 22.95 lbmass

Parts List			
ITEM	QTY	PART #	DESCRIPTION
1	18	110119	NUT, 10-24 LOCK
2	18	110788	BOLT, 10-24 X .375 STAINLESS, PHILLIPS
3	2	112119	ROLL PIN, 5/32 X 2 ZP
4	2	112126	SPRING, COMPRESSION 3.0L x 0.6 OD x .045
5	3	311729	HINGE, 6" ALUMINUM W/ HOLES
6	1	315371	WELDMENT, SHIELD TOP
7	2	317249	PIN, QUICK RELEASE
8	1	317264	SHIELD, BASE PIECE

12-28-2020

Parts List			
ITEM	QTY	PART #	DESCRIPTION
1	3' 2"	102004	D-Seal, Rubber 1.00" x 1.00"
2	2' 8"	102075	SEAL
3	27	110020	Bolt, 5/16-18 X 0.75 in Carriage
4	6	110119	NUT, 10-24 LOCK
5	26	110319	NUT, 5/16-18 U-TYPE .75L
6	8	110444	BOLT, 5/16-18 X 0.75, WIZ FLANGE
7	22	110459	BOLT, 5/16-18 X 1, WIZ FLANGE
8	43	110606	NUT, 5/16-18 WIZ FLANGE
9	6	110788	BOLT, 10-24 X .375 STAINLESS, PHILLIPS
10	12	110871	Bolt, 5/16-18 X 1 in Carriage
11	2	112051	POP RIVET, 1/8 X .275
12	1	302121	LINER, SWEEPER HOPPER
13	1	302131	LATCH, SPRING
14	1	305065	ASSY, SHIELD, HOPPER
15	4	311691	SIGHT GLASS, HOPPER
16	4	311692	Backing Plate, Sight Glass
17	1	311729	HINGE, 6" ALUMINUM W/ HOLES
18	1	315414	WELDMENT, HOPPER, US
19	2	317212	SCREEN, OUTER RETURN AIR
20	2	317213	SCREEN, INNER RETURN AIR
21	1	317214	SCREEN, RH RETURN AIR
22	1	317215	SCREEN, LH RETURN AIR
23	2	317245	RETAINER, LINER
24	1	317350	DEFLECTOR, RH HOPPER
25	1	317351	DEFLECTOR, LH HOPPER
26	1	317413	DOOR, HOPPER DEBRIS, US
27	1	317414	BRKT, HOPPER DEBRIS DOOR, US

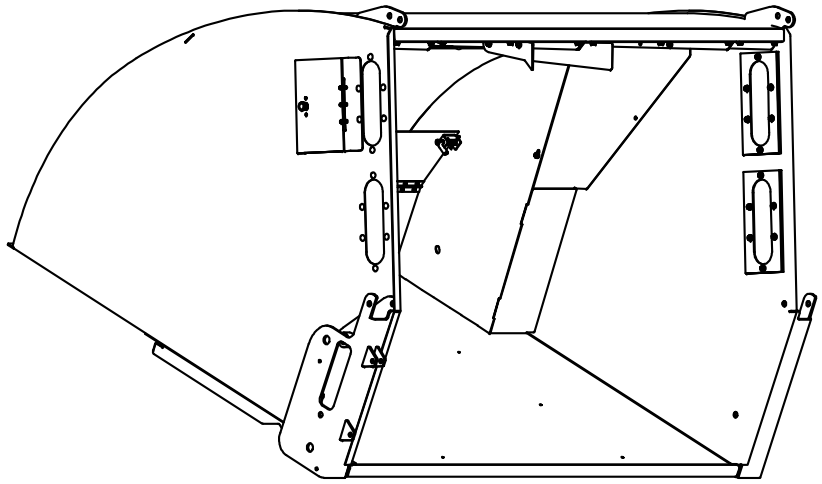

SIMILAR TO 305074

HOPPER ASSEMBLY

3-16-2021

305116	REV: NC

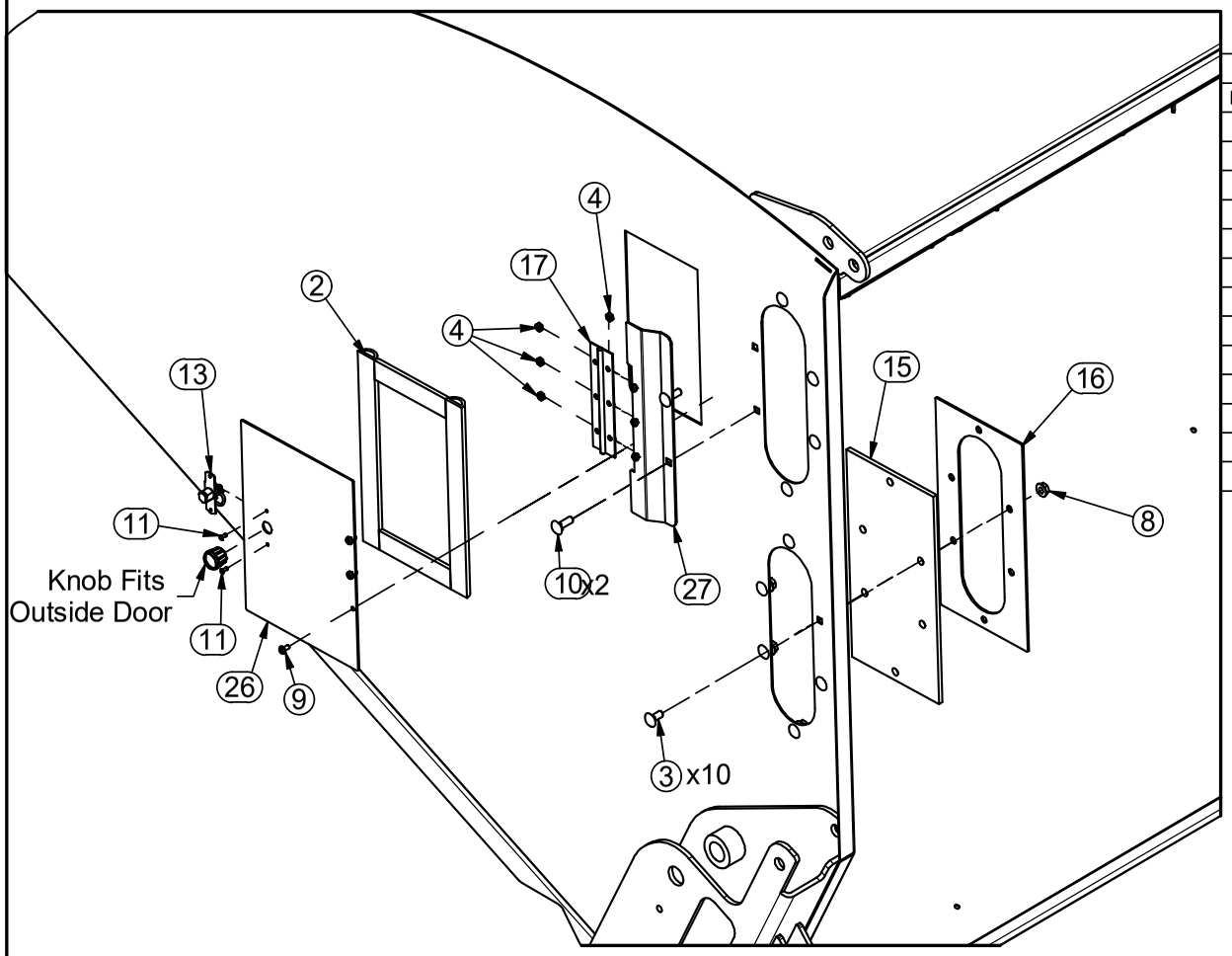

Parts List			
ITEM	QTY	PART #	DESCRIPTION
2	2' 8"	102075	SEAL
3	27	110020	Bolt, 5/16-18 X 0.75 in Carriage
4	6	110119	NUT, 10-24 LOCK
13	1	302131	LATCH, SPRING
15	4	311691	SIGHT GLASS, HOPPER
16	4	311692	Backing Plate, Sight Glass
17	1	311729	HINGE, 6" ALUMINUM W/ HOLES
26	1	317413	DOOR, HOPPER DEBRIS, US
27	1	317414	BRKT, HOPPER DEBRIS DOOR, US
11	2	112051	POP RIVET, 1/8 X .275
24	1	317350	DEFLECTOR, RH HOPPER
25	1	317351	DEFLECTOR, LH HOPPER
1	3' 2"	102004	D-Seal, Rubber 1.00" x 1.00"

WINDOW AND DOOR INSTALL

3-16-2021

305116	REV: NC

Parts List			
ITEM	QTY	PART #	DESCRIPTION
1	3' 2"	102004	D-Seal, Rubber 1.00" x 1.00"
3	27	110020	Bolt, 5/16-18 X 0.75 in Carriage
8	43	110606	NUT, 5/16-18 WIZ FLANGE
10	12	110871	Bolt, 5/16-18 X 1 in Carriage
11	2	112051	POP RIVET, 1/8 X .275
12	1	302121	LINER, SWEEPER HOPPER
14	1	305065	ASSY, SHIELD, HOPPER
23	2	317245	RETAINER, LINER
24	1	317350	DEFLECTOR, RH HOPPER
25	1	317351	DEFLECTOR, LH HOPPER

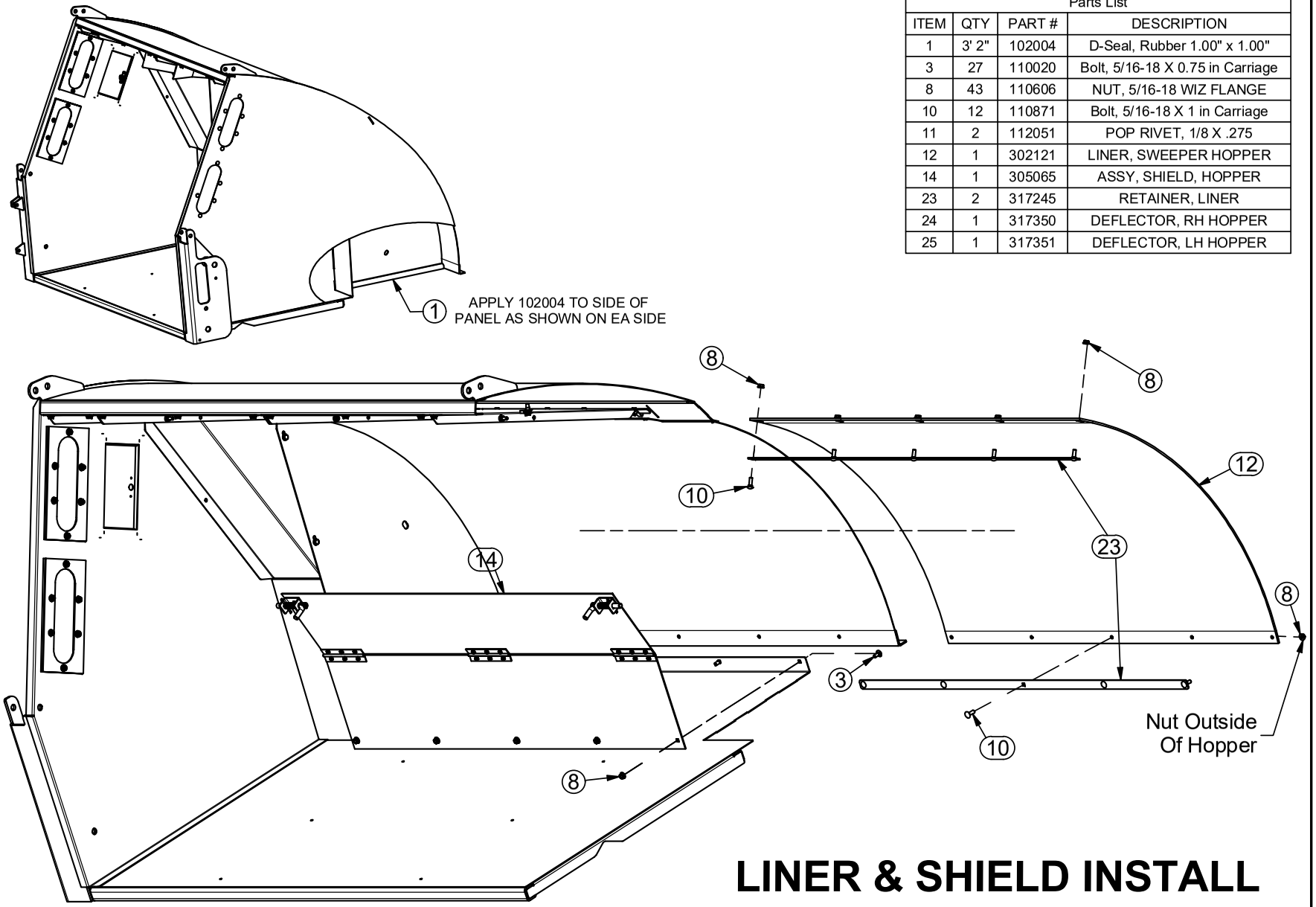

LINER & SHIELD INSTALL

3-16-2021

305116	REV: NC

Parts List			
ITEM	QTY	PART #	DESCRIPTION
5	26	110319	NUT, 5/16-18 U-TYPE .75L
6	8	110444	BOLT, 5/16-18 X 0.75, WIZ FLANGE
7	22	110459	BOLT, 5/16-18 X 1, WIZ FLANGE
8	43	110606	NUT, 5/16-18 WIZ FLANGE
19	2	317212	SCREEN, OUTER RETURN AIR
20	2	317213	SCREEN, INNER RETURN AIR
21	1	317214	SCREEN, RH RETURN AIR
22	1	317215	SCREEN, LH RETURN AIR
11	2	112051	POP RIVET, 1/8 X .275
24	1	317350	DEFLECTOR, RH HOPPER
25	1	317351	DEFLECTOR, LH HOPPER
1	3' 2"	102004	D-Seal, Rubber 1.00" x 1.00"

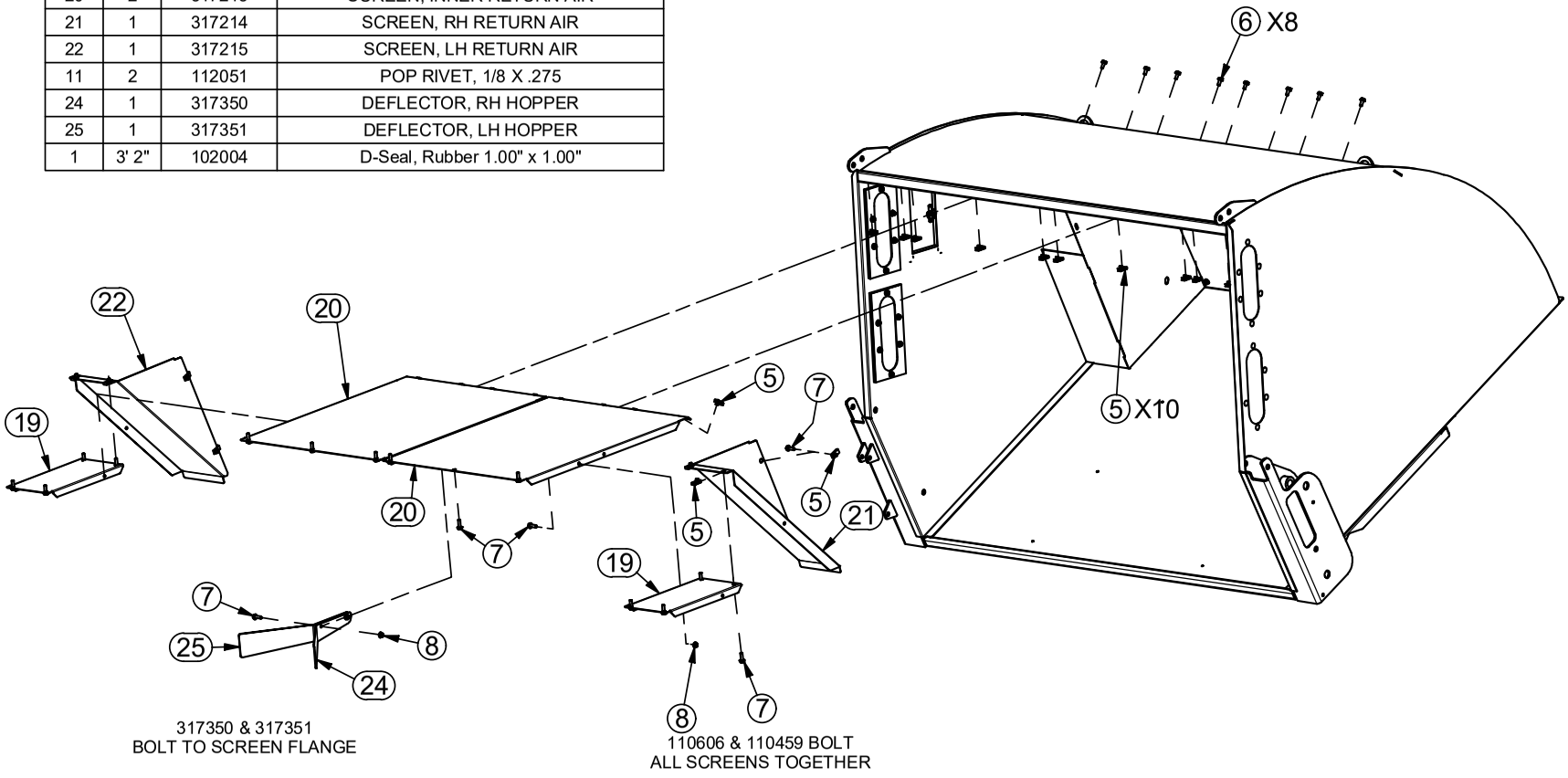

317350 & 317351
BOLT TO SCREEN FLANGE

110606 & 110459 BOLT
ALL SCREENS TOGETHER

SCREEN ASSEMBLY AND INSTALL

3-16-2021

305117	REV: NC

Parts List			
ITEM	QTY	PART #	DESCRIPTION
1	8.75'	100354	WEBBING, NYLON 1.50ID, SHEATH
2	2	102137	CLEVIS PIN, 1/2 X 1.75
3	4	110025	BOLT, 5/8-11 X 5.5
4	4	110378	BOLT, 5/16-18 X 2.0
5	2	110396	BOLT, 5/16-18 X 2.5
6	8	110444	BOLT, 5/16-18 X 0.75, WIZ FLANGE
7	8	110474	BOLT, 1/4-20 X 1-1/2
8	2	110536	BOLT, 5/16-18 X 3.25
9	2	110576	BOLT, 5/8-11 X 1.5 GR 5
10	10	110600	NUT, 5/16-18, UNITORQUE LOCK
11	8	110606	NUT, 5/16-18 WIZ FLANGE
12	6	110639	NUT, 5/8-11, UNITORQUE LOCK
13	2	110665	WASHER, 5/16" FLAT STANDARD
14	8	110667	WASHER, 1/4" LOCK
15	2	111190	Bolt, 3/8 x 2 Shoulder
16	2	112131	Clevis Pin, 1/2" x 1-1/2", ZINC-PLATED STEEL
17	2	112133	Clevis Pin, 1" x 2-3/16", ZINC-PLATED STEEL
18	2	120222	ADAPTER, 6MJ-6MB90
19	4	120233	ADAPTER, 4MJ-4MB
20	4	120266	ADAPTER, 4MJ-4FJX90
21	2	120398	ADAPTER, REST 6MJ-6MB, .047
22	2	140016	PIN, LOCK, 1/4 X 2-1/4, SQ WIRE
23	4	200029	COTTER PIN, 5/32 X 1
24	2	305103	Assy, Safety Latch, ISO
25	1	305113	Assy, Hopper Door, ISO, US
26	1	305116	ASSY, HOPPER, US
27	1	312022	CLIP, HAIRPIN 3/32 x 1.625
28	2	315257	PIN WELDMENT, HOPPER DOOR
29	2	315327	WELDMENT, DOOR LIFT PIVOT LINK
30	4	315331	WELDMENT, HOPPER LIFT - 4.00"
31	4	315332	WELDMENT, LIFT LINK PIN - 2.87"
32	4	315333	WELDMENT, LIFT LINK PIN - 2.12"
33	2	315383	Weldment, Door Arm End
34	1	315393	WELDMENT, DOOR STOP
35	2	315410	WELDMENT, VERTICAL LIFT LINK, US
36	2	315411	WELDMENT, CYLINDER LIFT LINK, US

Parts List			
ITEM	QTY	PART #	DESCRIPTION
37	2	315412	WELDMENT, LOWER LIFT LINK, US
38	2	315413	WELDMENT, UPPER LIFT LINK, US
39	2	315416	WELDMENT, DOOR LIFT LINK, US
40	2	317216	CLEVIS PIN, 3/4 X 3.75, W/ HOLE
41	4	317320	SPACER, CYLINDER
42	2	323010	CYLINDER - STEERING, 1-3/4 X 6
43	1	323065	HOSE KIT, HAWK HOPPER HYDRAULIC
44	2	323066	Cylinder, 2.5 X 8, -6 SAE, Hopper
45	2	500184	COTTER PIN, 3/16 X 1.25
46	2	500230	GREASE ZERK, 1/4-28 90deg
47	14	510174	GREASE ZERK, 1/4-28 ST
48	8	522104	DOUBLE HOSE CLAMP
49	8	522105	DOUBLE COVERPLATE

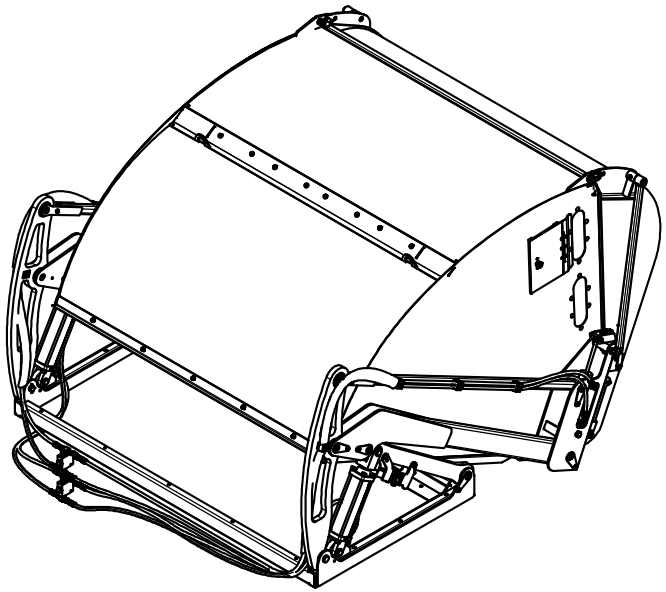

SIMILAR TO 305075

HOPPER INSTALLATION

5-17-2021

305117	REV: NC

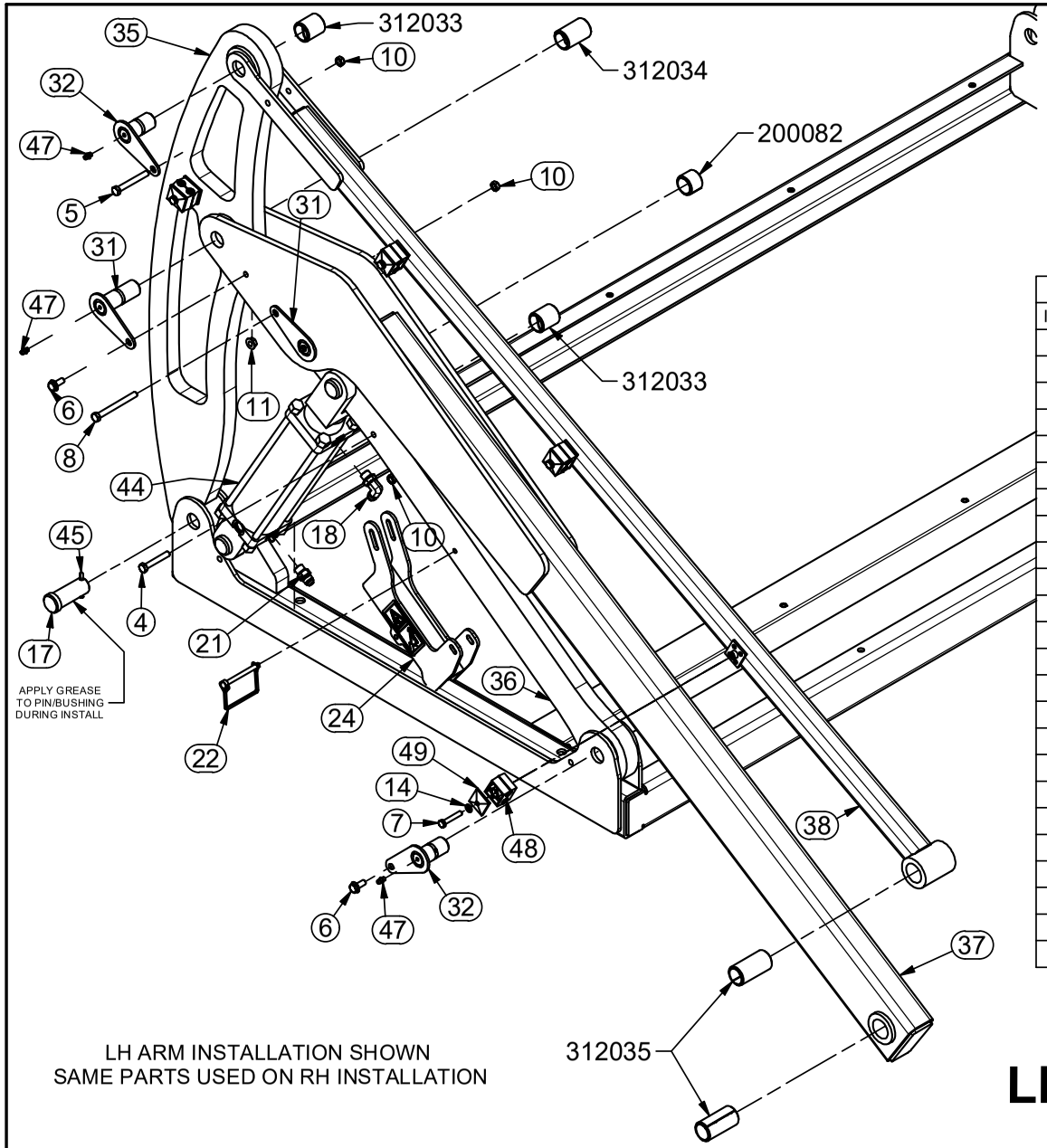

LH ARM INSTALLATION SHOWN
SAME PARTS USED ON RH INSTALLATION

Service Parts		
QTY	PART #	DESCRIPTION
1	200082	Bushing, 1.25 X 1 X 1, Split Steel
2	312033	Bushing, 1.25 X 1 X 1.438, Split, w/
1	312034	Bushing, 1.25 X 1 X 1.938, Split, w/
2	312035	Bushing, 1.25 X 1 X 2.5, Split, w/

Parts List			
ITEM	QTY	PART #	DESCRIPTION
4	1	110378	BOLT, 5/16-18 X 2.0
5	1	110396	BOLT, 5/16-18 X 2.5
6	2	110444	BOLT, 5/16-18 X 0.75, WIZ FLANGE
7	4	110474	BOLT, 1/4-20 X 1-1/2
8	1	110536	BOLT, 5/16-18 X 3.25
10	3	110600	NUT, 5/16-18, UNITORQUE LOCK
11	2	110606	NUT, 5/16-18 WIZ FLANGE
14	4	110667	WASHER, 1/4" LOCK
17	1	112133	Clevis Pin, 1" x 2-3/16", ZINC-PLATED STEEL
18	1	120222	ADAPTER, 6MJ-6MB90
21	1	120398	ADAPTER, REST 6MJ-6MB, .047
22	1	140016	PIN, LOCK, 1/4 X 2-1/4, SQ WIRE
24	1	305103	Assy, Safety Latch, ISO
31	2	315332	WELDMENT, LIFT LINK PIN - 2.87"
32	2	315333	WELDMENT, LIFT LINK PIN - 2.12"
35	1	315410	WELDMENT, VERTICAL LIFT LINK, US
36	1	315411	WELDMENT, CYLINDER LIFT LINK, US
37	1	315412	WELDMENT, LOWER LIFT LINK, US
38	1	315413	WELDMENT, UPPER LIFT LINK, US
44	1	323066	Cylinder, 2.5 X 8, -6 SAE, Hopper
45	1	500184	COTTER PIN, 3/16 X 1.25
47	4	510174	GREASE ZERK, 1/4-28 ST
48	4	522104	DOUBLE HOSE CLAMP
49	4	522105	DOUBLE COVERPLATE

LIFT ARM ASSEMBLY

5-17-2021

305117	REV: NC

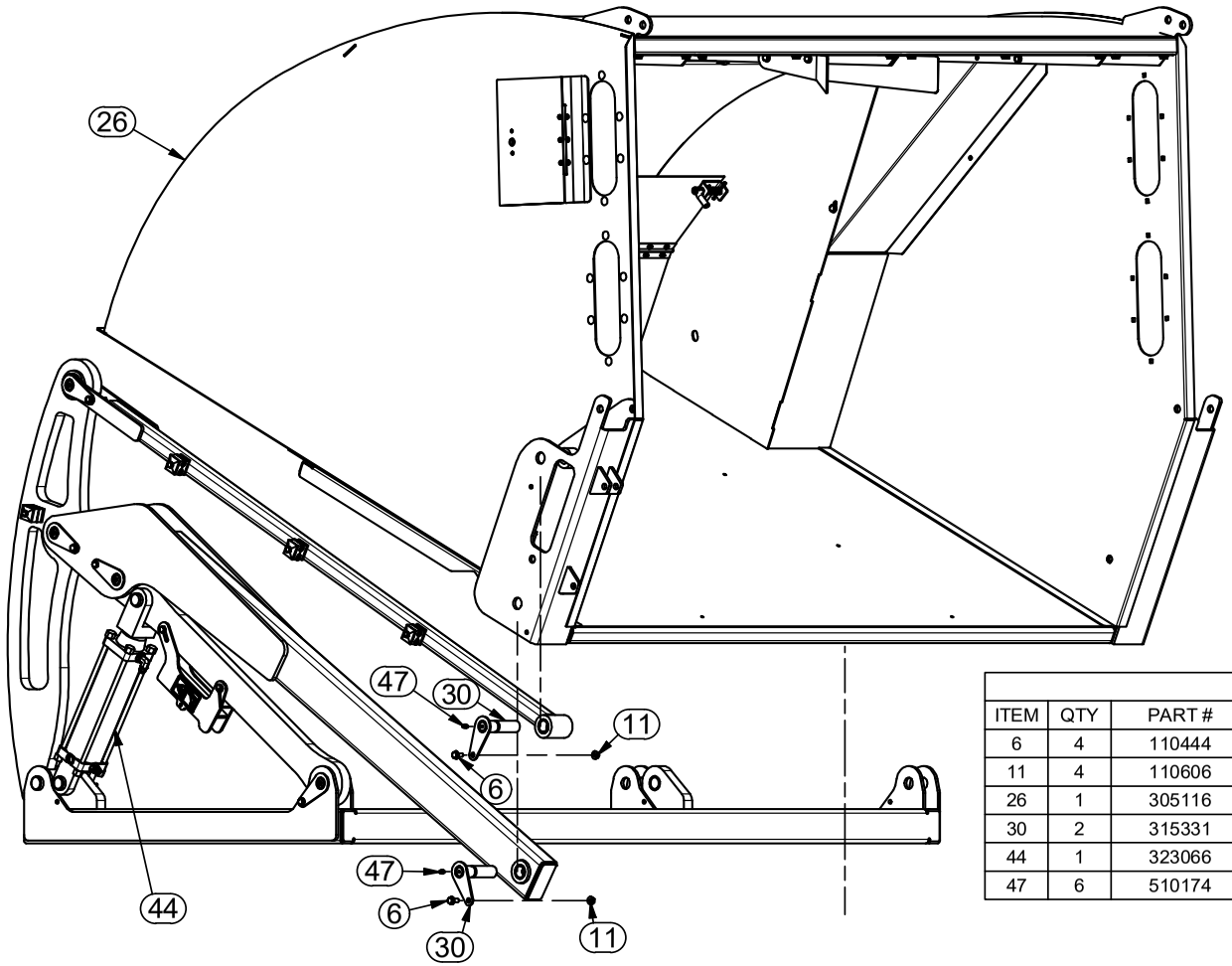

LH INSTALLATION SHOWN
SAME PARTS USED ON RH INSTALLATION

Parts List			
ITEM	QTY	PART #	DESCRIPTION
6	4	110444	BOLT, 5/16-18 X 0.75, WIZ FLANGE
11	4	110606	NUT, 5/16-18 WIZ FLANGE
26	1	305116	ASSY, HOPPER, US
30	2	315331	WELDMENT, HOPPER LIFT - 4.00"
44	1	323066	Cylinder, 2.5 X 8, -6 SAE, Hopper
47	6	510174	GREASE ZERK, 1/4-28 ST

HOPPER INSTALL

5-17-2021

305117	REV: NC

DOOR & ARM INSTALL

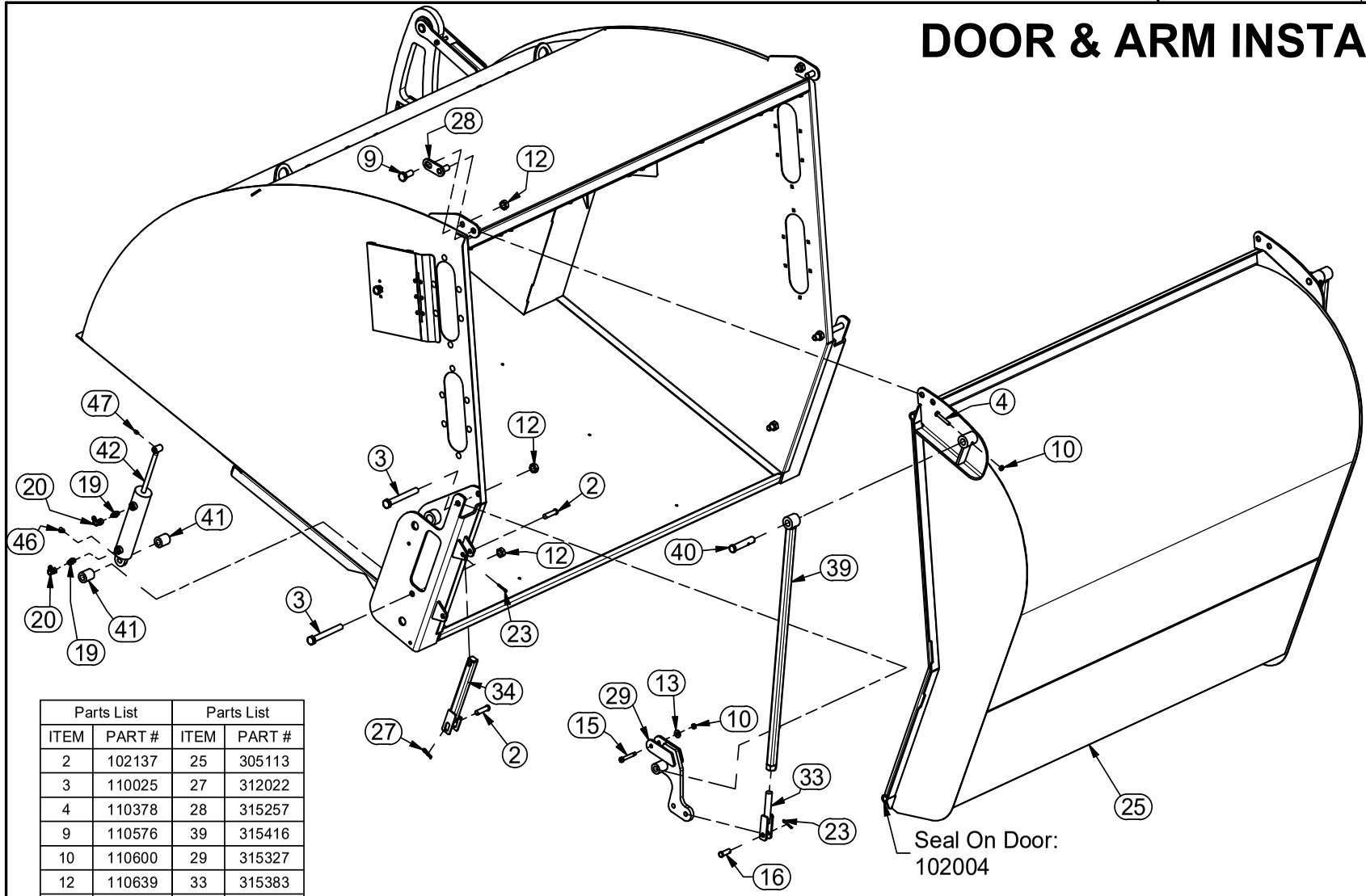

Parts List		Parts List	
ITEM	PART #	ITEM	PART #
2	102137	25	305113
3	110025	27	312022
4	110378	28	315257
9	110576	39	315416
10	110600	29	315327
12	110639	33	315383
13	110665	34	315393
15	111190	40	317216
16	112131	41	317320
19	120233	42	323010
20	120266	46	500230
23	200029	47	510174

1. INITIALLY SET THE HOPPER DOOR LIFT LINK TO 36.5" (CTR TO CTR)
2. ADJUST AS NEEDED TO COMPRESS THE DOOR SEAL TO 0.5" AT THE BOTTOM OF THE DOOR

10-27-2021

305117	REV: NC

HOPPER CYLINDER PLUMBING

Parts List			
ITEM	QTY	PART #	DESCRIPTION
1	8.75'	100354	WEBBING, NYLON 1.50ID, SHEATH
7	8	110474	BOLT, 1/4-20 X 1-1/2
14	8	110667	WASHER, 1/4" LOCK
43	1	323065	HOSE KIT, HAWK HOPPER HYDRAULIC
48	8	522104	DOUBLE HOSE CLAMP
49	8	522105	DOUBLE COVERPLATE

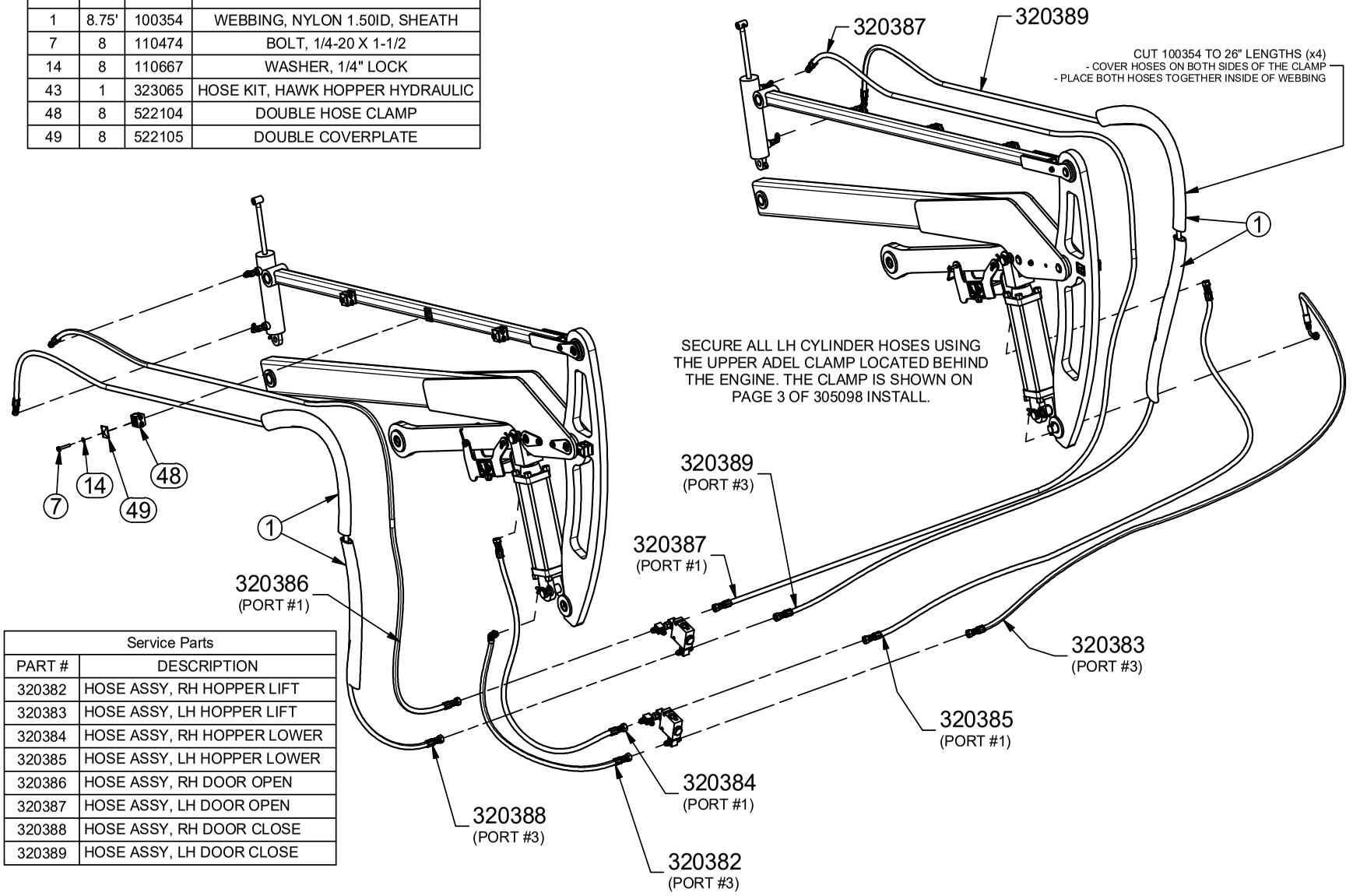

Service Parts	
PART #	DESCRIPTION
320382	HOSE ASSY, RH HOPPER LIFT
320383	HOSE ASSY, LH HOPPER LIFT
320384	HOSE ASSY, RH HOPPER LOWER
320385	HOSE ASSY, LH HOPPER LOWER
320386	HOSE ASSY, RH DOOR OPEN
320387	HOSE ASSY, LH DOOR OPEN
320388	HOSE ASSY, RH DOOR CLOSE
320389	HOSE ASSY, LH DOOR CLOSE

5-17-2021

305090 REV: D

Parts List			
ITEM	QTY	PART #	DESCRIPTION
1	4'	100613	SEAL, RUBBER .50 X .187
2	2.5'	102072	TAPE, DOUBLE-SIDED AUTO, 1/2"x.045
3	4	110020	Bolt, 5/16-18 X 0.75 in Carriage
4	12	110103	WASHER, #10 LOCK
5	6	110119	NUT, 10-24 LOCK
6	17	110264	BOLT, 10-24 X .5 STAINLESS, PHILLIPS
7	2	110404	BOLT, 3/8-16 X 1.75
8	3	110437	BOLT, 3/8-16 X 0.75, WIZ FLANGE
9	4	110468	BOLT, 1/4-20 X 0.75, WIZ FLANGE
10	10	110606	NUT, 5/16-18 WIZ FLANGE
11	2	110621	NUT, 3/8-16, UNITORQUE LOCK
12	4	110630	NUT, 1/4-20 LOCK (NYLON INSERT)
13	10	110631	NUT, 10-24 LOCK NYLON INSERT
14	2	110632	NUT, 1/4-28, UNITORQUE LOCK
15	3	110645	NUT, 3/8-16 WIZ FLANGE
16	6	110788	BOLT, 10-24 X .375 STAINLESS, PHILLIPS
17	10	110834	SCREW, 10-24 X 3/4 SS PAN HEAD
18	17	110835	NUT, 10-24 RIVET ALUMINUM
19	2	110971	BOLT, 5/16-18 X .50 SHCS
20	2	112051	POP RIVET, 1/8 X .275
21	2	112119	ROLL PIN, 5/32 X 2 ZP
22	2	112126	SPRING, COMP 3.0L x 0.6 OD x .045
23	1	152004	HOLDER, MANUAL
24	1	200020	CLAMP, ADEL AC22 .265 HOLE
25	1	302015	HOLDER - CUP, MOLDED
26	3	302017	CLEVIS - THROTTLE
27	1	302078	SEAT, I3M SUSPENSION
28	1	302124	CABLE, THROTTLE 60"
29	1	302131	LATCH, SPRING
30	1	302132	DECAL, MAIN CONSOLE
31	1	302133	Decal, Hydraulics Panel
32	1	302134	DECAL, BROOM PANEL
33	1	302135	Decal, Throttle Panel
34	1	302164	CABLE, PUSH/PULL 60"
35	1	305061	Assy, Forward Foot Pedal
36	1	305062	Assy, Reverse Foot Pedal

Parts List			
ITEM	QTY	PART #	DESCRIPTION
37	1	305064	Assy, Console Panel, ISO
38	1	311729	HINGE, 6" ALUMINUM W/ HOLES
39	1	315349	WELDMENT, FOOT PEDAL MOUNT
40	1	315355	WELDMENT, FOOT PEDAL PIVOT
41	1	317102	PANEL, LEVER
42	1	317103	PANEL, DECK SWITCH
43	1	317172	BASE, SEAT MOUNT
44	1	317173	PIN, SEAT MOUNTING
45	1	317186	COVER, FOOT PEDAL
46	1	317193	DOOR, CONSOLE ACCESS
47	1	317195	PANEL, GAUGE & SWITCH
48	2	317249	PIN, QUICK RELEASE
49	1	332031	SWITCH, IGNITION
50	1	332059	DISPLAY, MACHINE
51	1	332060	HARNESS, MASTER

Parts List			
ITEM	QTY	PART #	DESCRIPTION
52	1	332063	HARNESS, INSTRUMENT PANEL
53	1	332064	HARNESS, RELAY
54	2	510112	COTTER PIN, 3/16 X 1
55	2	540075	BEARING, ROD END 1/4-28 W/STUD
56	4	800128	BUSHING, IGUS, FOOT PEDAL
57	1	810886	LINKAGE, 1/4-28 FOOT PEDAL
58	1	815094	WELDMENT, REV FOOT PEDAL PIVOT
59	2	832005	SWITCH, PADDLE, CARLING (29253)
60	1	832018	SWITCH, SPDT, ON-ON
61	6	832024	MOUNT, SWITCH (VMS)
62	3	832033	HOLE PLUG (VHP)
63	1	832068	MODULE, TIME DELAY, 1.75 SEC, 1804
64	2	832082	ALARM, PANEL MOUNT, CONTINUOUS TONE

OPERATOR STATION & ELECTRICAL ASSEMBLY

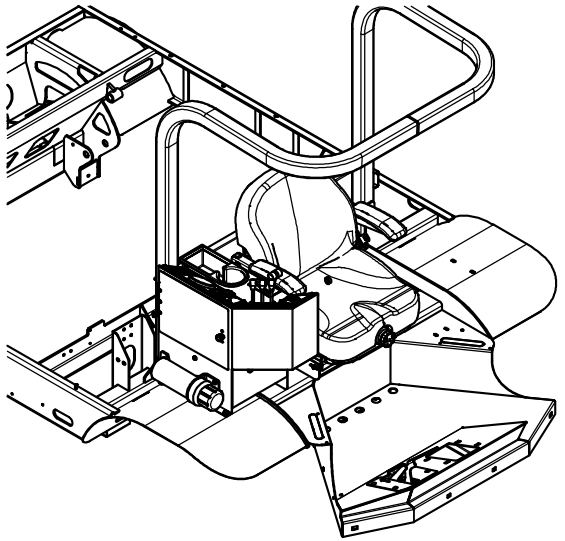

10-27-2021

DECK SWITCH PANEL ASSEMBLY

Parts List			
ITEM	QTY	PART #	DESCRIPTION
32	1	302134	DECAL, BROOM PANEL
42	1	317103	PANEL, DECK SWITCH
59	1	832005	SWITCH, PADDLE, CARLING (29253)
61	1	832024	MOUNT, SWITCH (VMS)

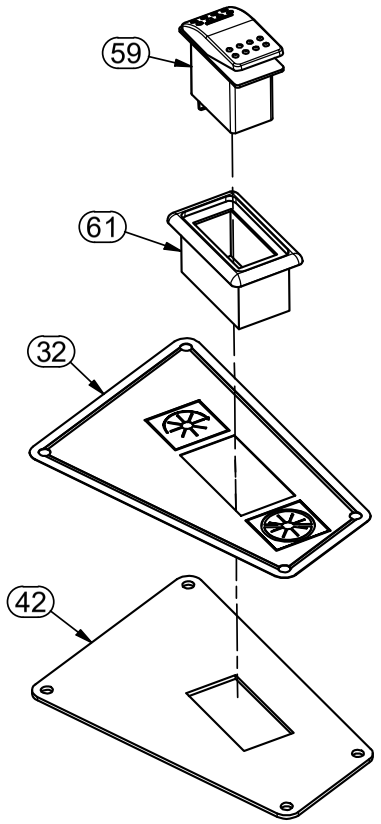

INSTRUMENT PANEL ASSEMBLY

Parts List			
ITEM	QTY	PART #	DESCRIPTION
30	1	302132	DECAL, MAIN CONSOLE
47	1	317195	PANEL, GAUGE & SWITCH
49	1	332031	SWITCH, IGNITION
50	1	332059	DISPLAY, MACHINE
59	1	832005	SWITCH, PADDLE, CARLING (29253)
60	1	832018	SWITCH, SPDT, ON-ON
61	5	832024	MOUNT, SWITCH (VMS)
62	3	832033	HOLE PLUG (VHP)

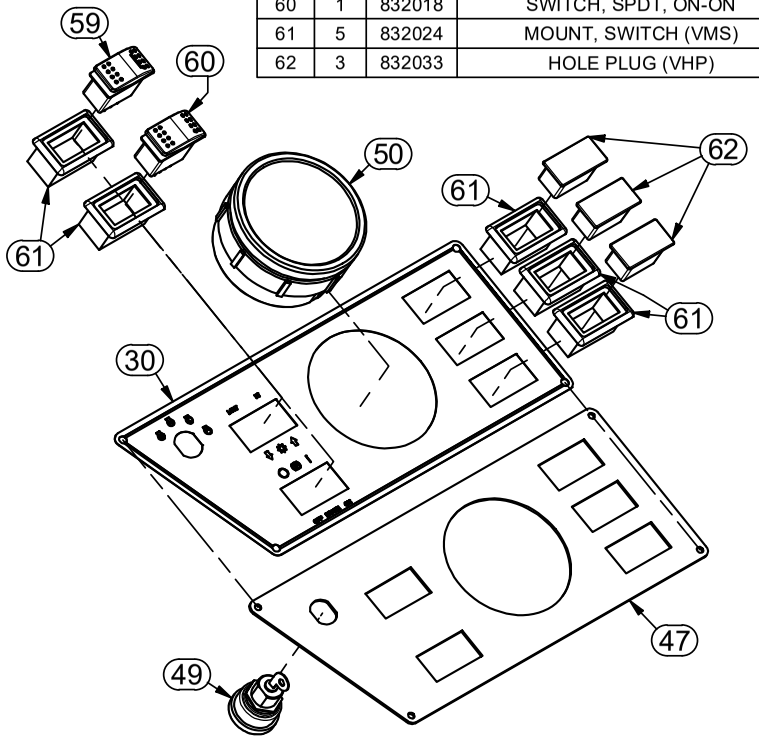

10-27-2021

305090	REV: D

CONSOLE ASSEMBLY

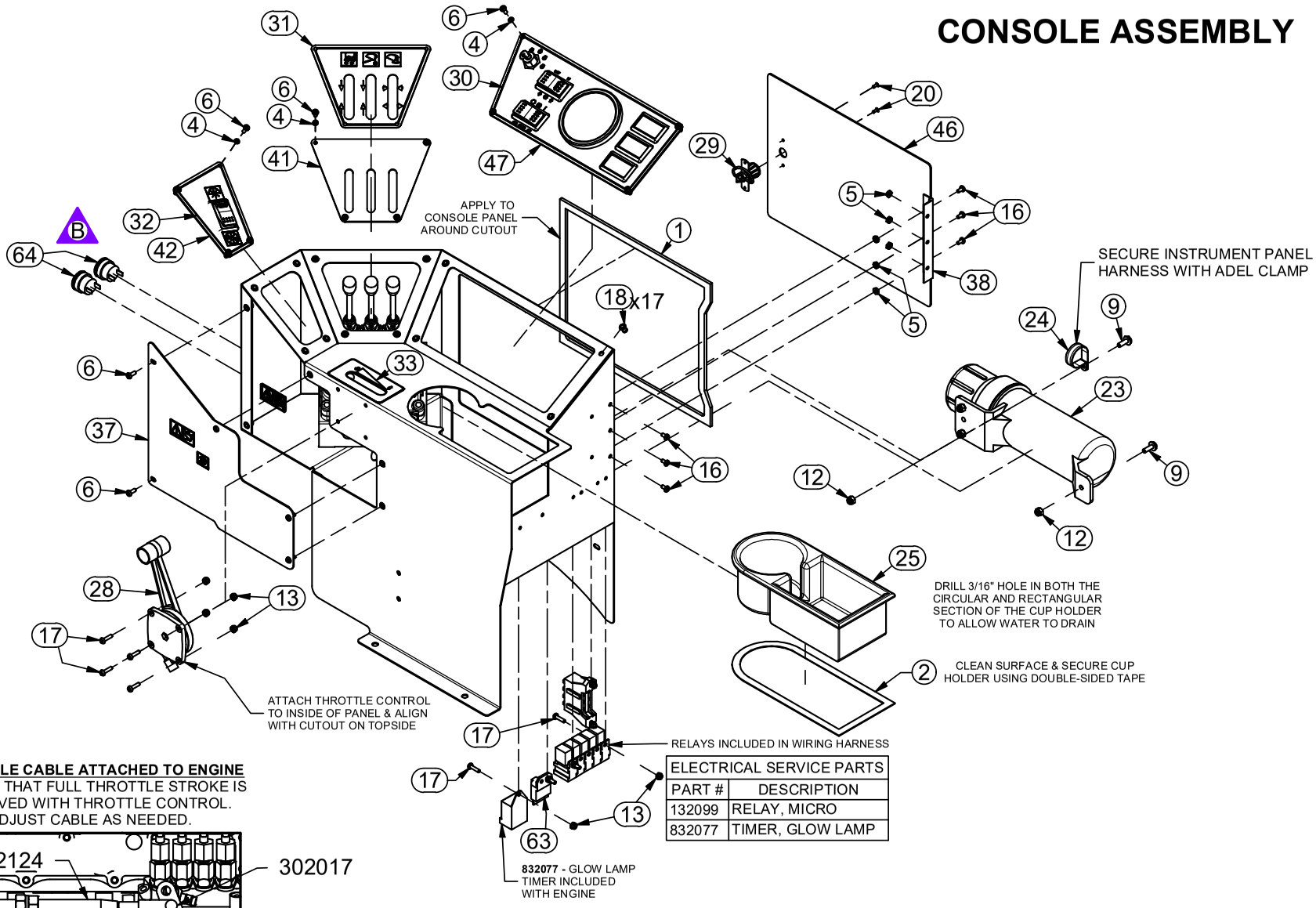

ELECTRICAL SERVICE PARTS	
PART #	DESCRIPTION
132099	RELAY, MICRO
832077	TIMER, GLOW LAMP

THROTTLE CABLE ATTACHED TO ENGINE

ENSURE THAT FULL THROTTLE STROKE IS ACHIEVED WITH THROTTLE CONTROL. ADJUST CABLE AS NEEDED.

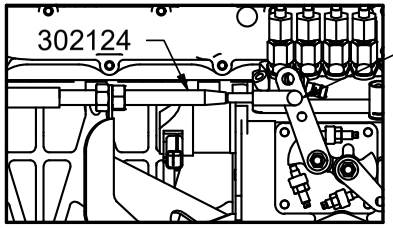

10-27-2021

305090	REV: D

FOOT PEDAL ASSEMBLY

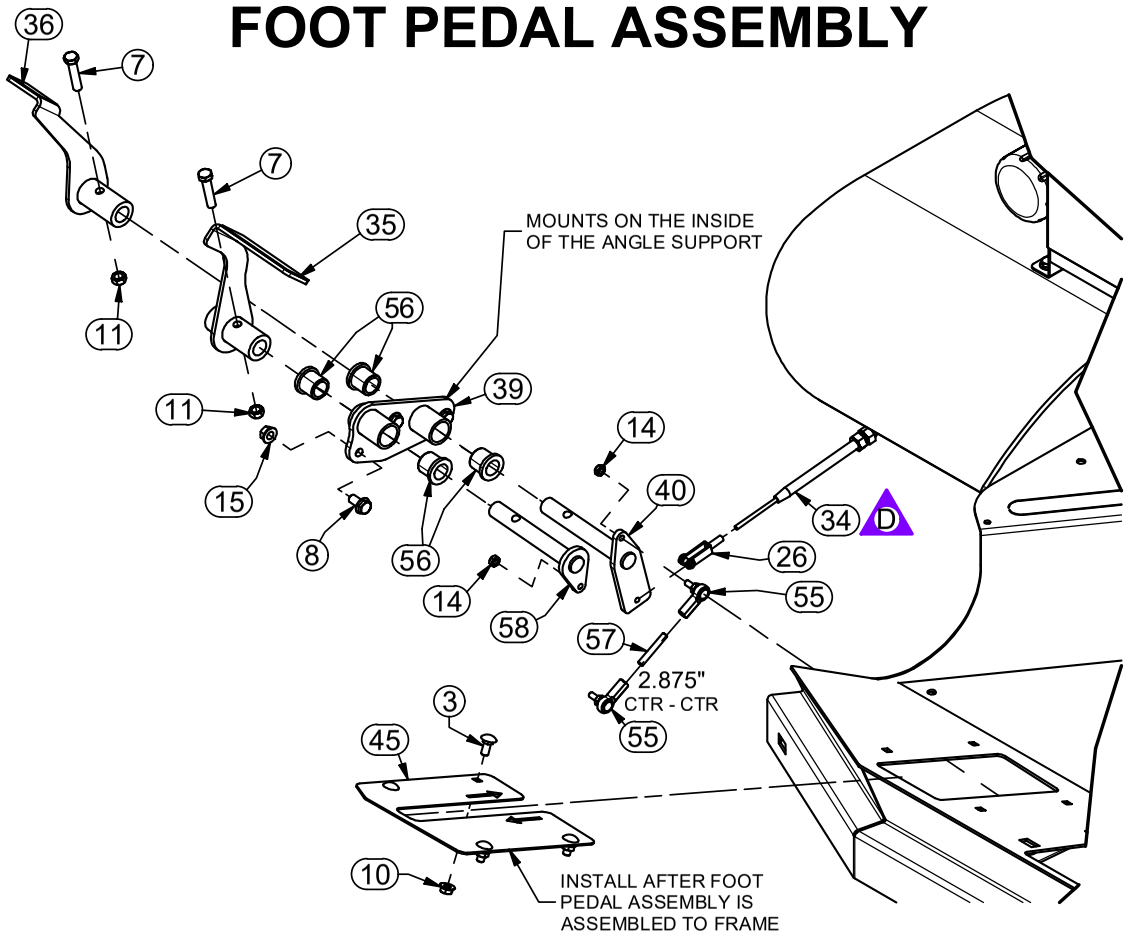

FOOT PEDAL ASSEMBLY SIDE VIEW

MEASURE FORWARD FOOT PEDAL FORCE USING A FISH SCALE OR SPRING SCALE. ENSURE THAT THE FORCE IS BETWEEN 20 - 35 LBS WHEN MACHINE IS OFF. SEE INSTRUCTIONS BELOW FOR ADJUSTING THE NEUTRAL SPRING.

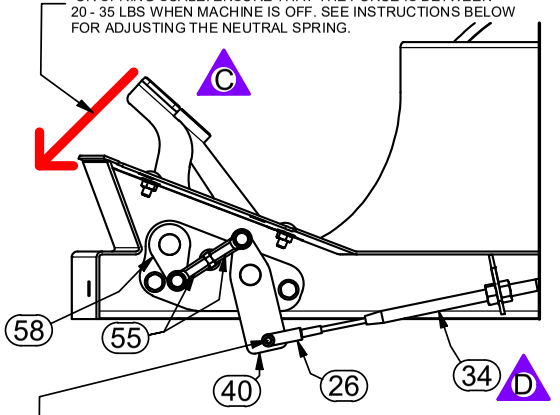

PAY CAREFUL ATTENTION WHEN INSTALLING THE PUSH/PULL CABLE. ROUTE CABLE SO THAT IT DOES NOT GET PINCHED & ROUTE SO THAT IT DOES NOT HAVE ANY TIGHT BENDS. MAKE SURE THAT THE CABLE IS NOT TWISTED WHEN SECURING THE CLEVIS TO THE END.

NEUTRAL RETURN SPRING ON PUMP

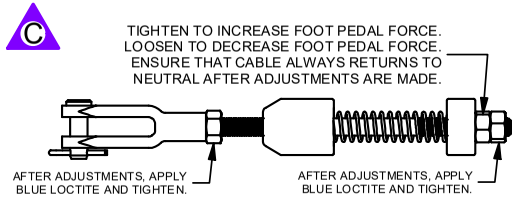

PEDAL CABLE TO PROPULSION PUMP

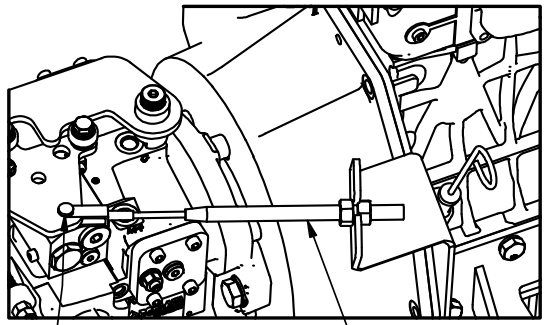

10-27-2021

305090	REV: D

SEAT ASSEMBLY

Parts List			
ITEM	QTY	PART #	DESCRIPTION
10	6	110606	NUT, 5/16-18 WIZ FLANGE
19	2	110971	BOLT, 5/16-18 X .50 SHCS
21	2	112119	ROLL PIN, 5/32 X 2 ZP
22	2	112126	SPRING, COMP 3.0L x 0.6 OD x .045
27	1	302078	SEAT, I3M SUSPENSION
43	1	317172	BASE, SEAT MOUNT
44	1	317173	PIN, SEAT MOUNTING
48	2	317249	PIN, QUICK RELEASE
54	2	510112	COTTER PIN, 3/16 X 1

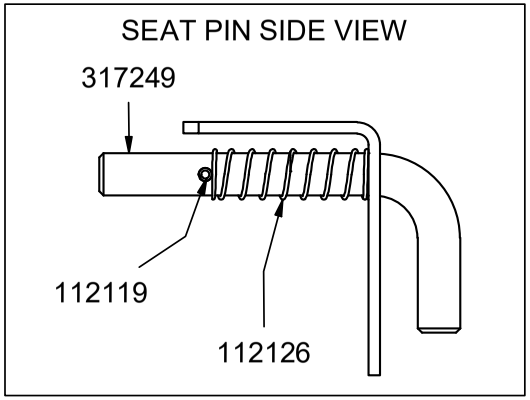

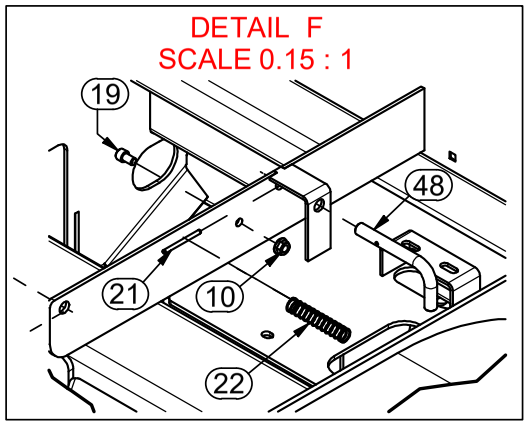

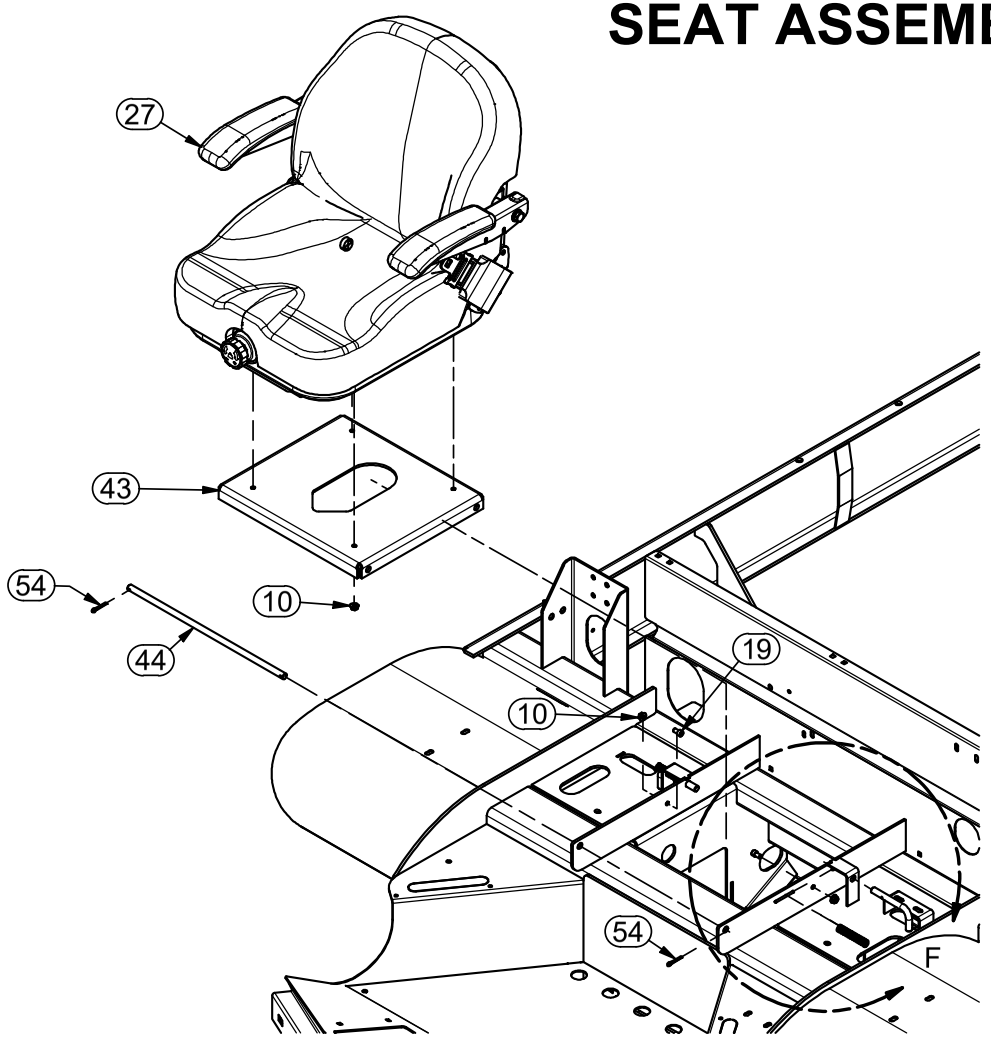

10-27-2021

INSERT 11x7
WIRING PAGE

MIRROR, TIRE, & SHIELD INSTALLATION

Parts List			
ITEM	QTY	PART #	DESCRIPTION
1	15 FT	100613	SEAL, RUBBER .50 X .187
2	18	110119	NUT, 10-24 LOCK
3	2	110400	BOLT, 3/8-16 X 2.0
4	4	110444	BOLT, 5/16-18 X 0.75, WIZ FLANGE
5	2	110474	BOLT, 1/4-20 X 1-1/2
6	4	110606	NUT, 5/16-18 WIZ FLANGE
7	4	110615	NUT, 1/2-13, UNITORQUE LOCK
8	4	110645	NUT, 3/8-16 WIZ FLANGE
9	4	110658	WASHER, 1/2" FLAT STANDARD
10	2	110667	WASHER, 1/4" LOCK
11	18	110788	BOLT, 10-24 X .375 STAINLESS, PHILLIPS
12	4	110826	NUT, 3/8-16 GR 5
13	2	111185	BOLT, SQUARE U, 3/8-16 x 2.50 x 4.0
14	6	112051	POP RIVET, 1/8 X .275
15	4	112070	Bolt, 1/2-13 X 1.25 in Carriage
16	4	211747	FRICTION WASHER 1.5"
17	3	302131	LATCH, SPRING
18	2	302139	Convex Mirror, 8" Round, Offset Ball-Stud
19	4	302140	Plug, Snap-In Square, 3/4"
20	2	305083	ASSY, FRONT TIRE
21	2	305084	ASSY, REAR TIRE
22	1	305101	ASSY, RH ENGINE SHIELD
23	1	305119	ASSY, LOWER DECK SHIELD, US
24	1	305120	ASSY, UPPER DECK SHIELD, US
25	3	311729	HINGE, 6" ALUMINUM W/ HOLES
26	1	312022	CLIP, HAIRPIN 3/32 x 1.625
27	2	315385	WELDMENT, SWINGING MIRROR
28	2	315391	WELDMENT, MIRROR UBOLT MOUNT
29	2	317237	SHIELD, UPPER ENGINE
30	1	317244	BUMPER, FRONT

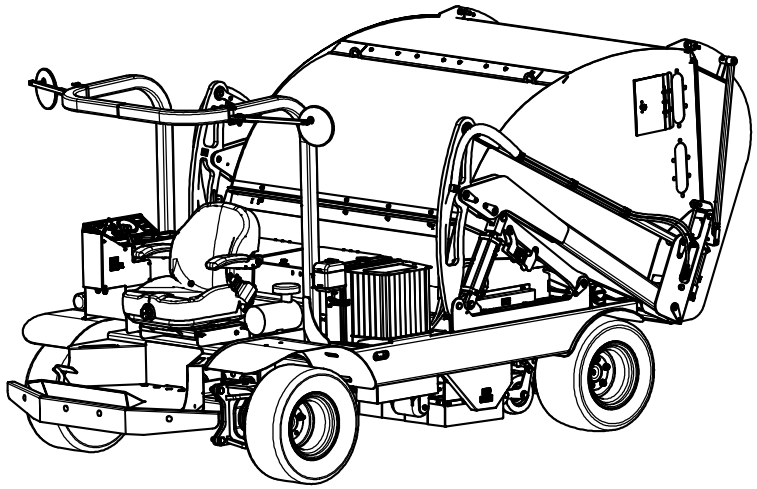

SIMILAR TO 305095

5-17-2021

BUMPER, DECK SHIELDS, & WHEEL/TIRE ASSEMBLY

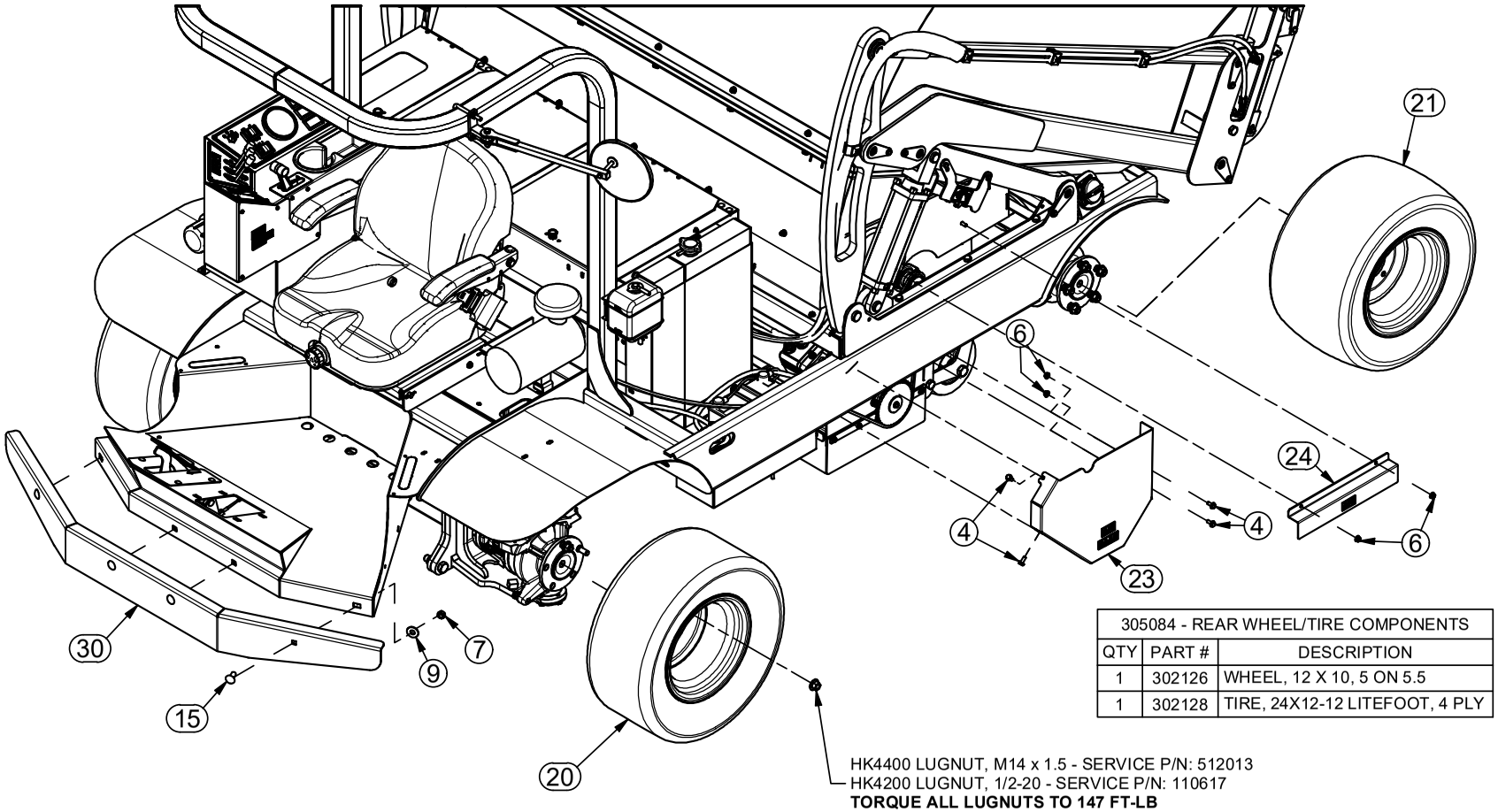

305084 - REAR WHEEL/TIRE COMPONENTS		
QTY	PART #	DESCRIPTION
1	302126	WHEEL, 12 X 10, 5 ON 5.5
1	302128	TIRE, 24X12-12 LITEFOOT, 4 PLY

HK4400 LUGNUT, M14 x 1.5 - SERVICE P/N: 512013
HK4200 LUGNUT, 1/2-20 - SERVICE P/N: 110617
TORQUE ALL LUGNUTS TO 147 FT-LB

305083 - FRONT WHEEL/TIRE COMPONENTS		
QTY	PART #	DESCRIPTION
1	302125	WHEEL, 12 X 7, 5 ON 5.5 W/ -3.25 OFFSET
1	302127	TIRE, 24X9.5-12 LITEFOOT, 4PLY

8-26-2021

305121	REV: NC

MIRROR ASSEMBLY

Parts List			
ITEM	QTY	PART #	DESCRIPTION
3	2	110400	BOLT, 3/8-16 X 2.0
5	2	110474	BOLT, 1/4-20 X 1-1/2
8	4	110645	NUT, 3/8-16 WIZ FLANGE
10	2	110667	WASHER, 1/4" LOCK
12	4	110826	NUT, 3/8-16 GR 5
13	2	111185	BOLT, SQUARE U, 3/8-16 x 2.50 x 4.0
16	4	211747	FRICTION WASHER 1.5"
18	2	302139	Convex Mirror, 8" Round, Offset Ball-Stud
19	4	302140	Plug, Snap-In Square, 3/4"
27	2	315385	WELDMENT, SWINGING MIRROR
28	2	315391	WELDMENT, MIRROR UBOLT MOUNT

SAME PARTS USED ON OPPOSITE SIDE

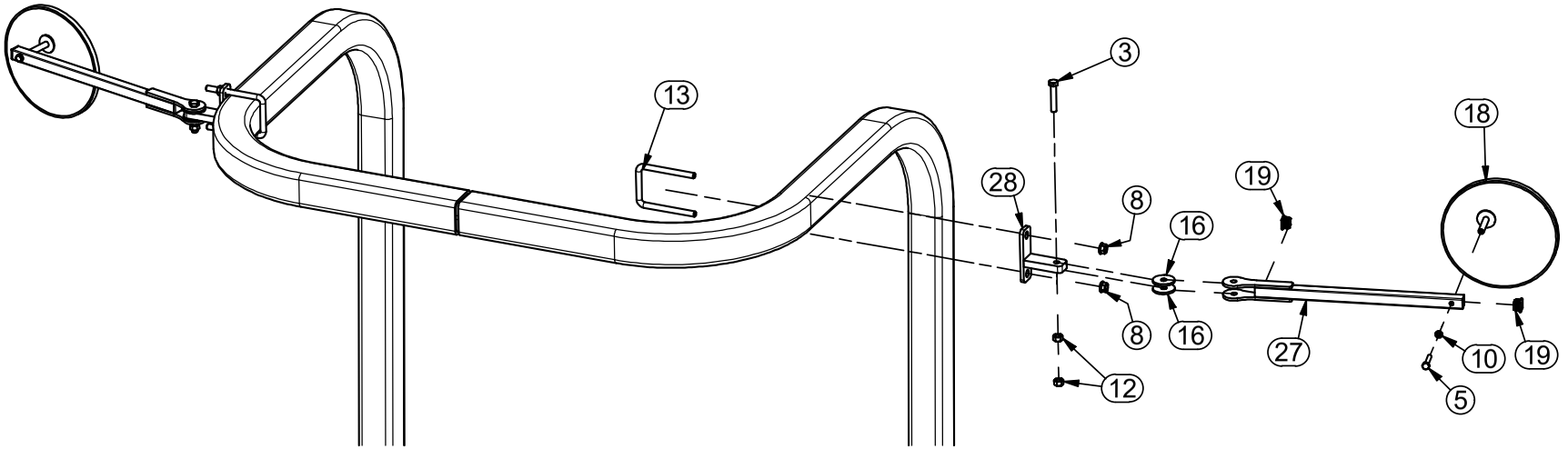

5-17-2021

305121	REV: NC

ENGINE SHIELD ASSEMBLY

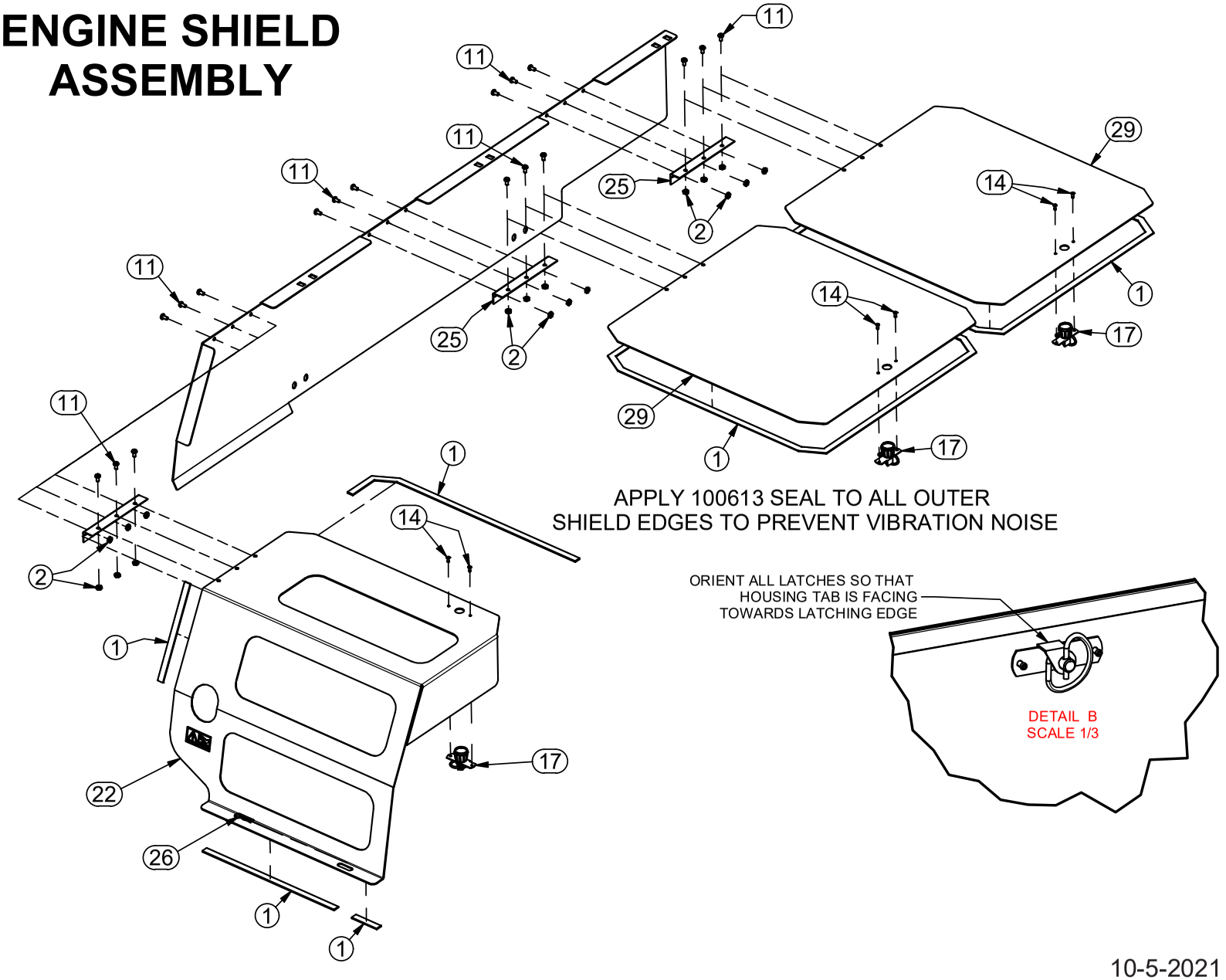

APPLY 100613 SEAL TO ALL OUTER SHIELD EDGES TO PREVENT VIBRATION NOISE

ORIENT ALL LATCHES SO THAT HOUSING TAB IS FACING TOWARDS LATCHING EDGE

DETAIL B
SCALE 1/3

5-17-2021

10-5-2021

305108	REV: NC

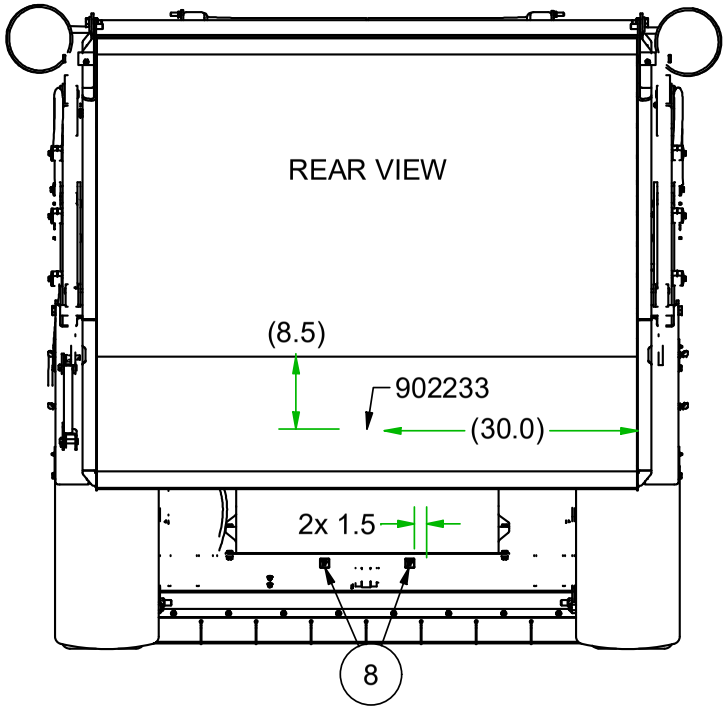

Parts List			
ITEM	QTY	PART #	DESCRIPTION
1	46"	100373	Traction Pad, Flex-tread, 5.5
2	1	202133	Decal, Prop 65, Diesel
3	1	202134	Decal, Prop 65, Short Form
4	1	302106	DECAL, DIESEL FUEL
5	1	302150	Decal, Hk Rops Certification
6	2	302155	Decal, Hawk
7	1	800195	DECAL, RECYCLE BATTERY
8	4	802067	Decal, Tie Down Point
9	1	902186	DECAL, EPA STANDARDS
10	1	902231	Decal, Hot Surface, Oil Cooler
11	1	902232	Decal, High Pressure Injection
12	2	902234	Decal, No Lift
13	1	902240	Plate, Serial Number, Harper Turf, Blue
14	1	902242	Decal, Harper Turf Equipment, 30"

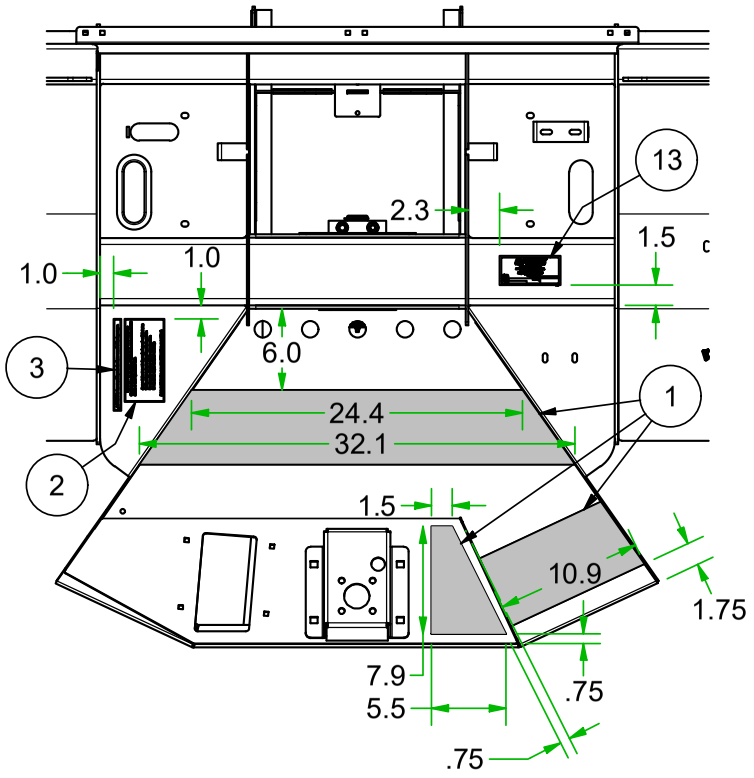

TRACTION PAD INSTALLATION

DECAL INSTALLATION

5-17-2021

305108	REV: NC

RH VIEW DECAL INSTALLATION

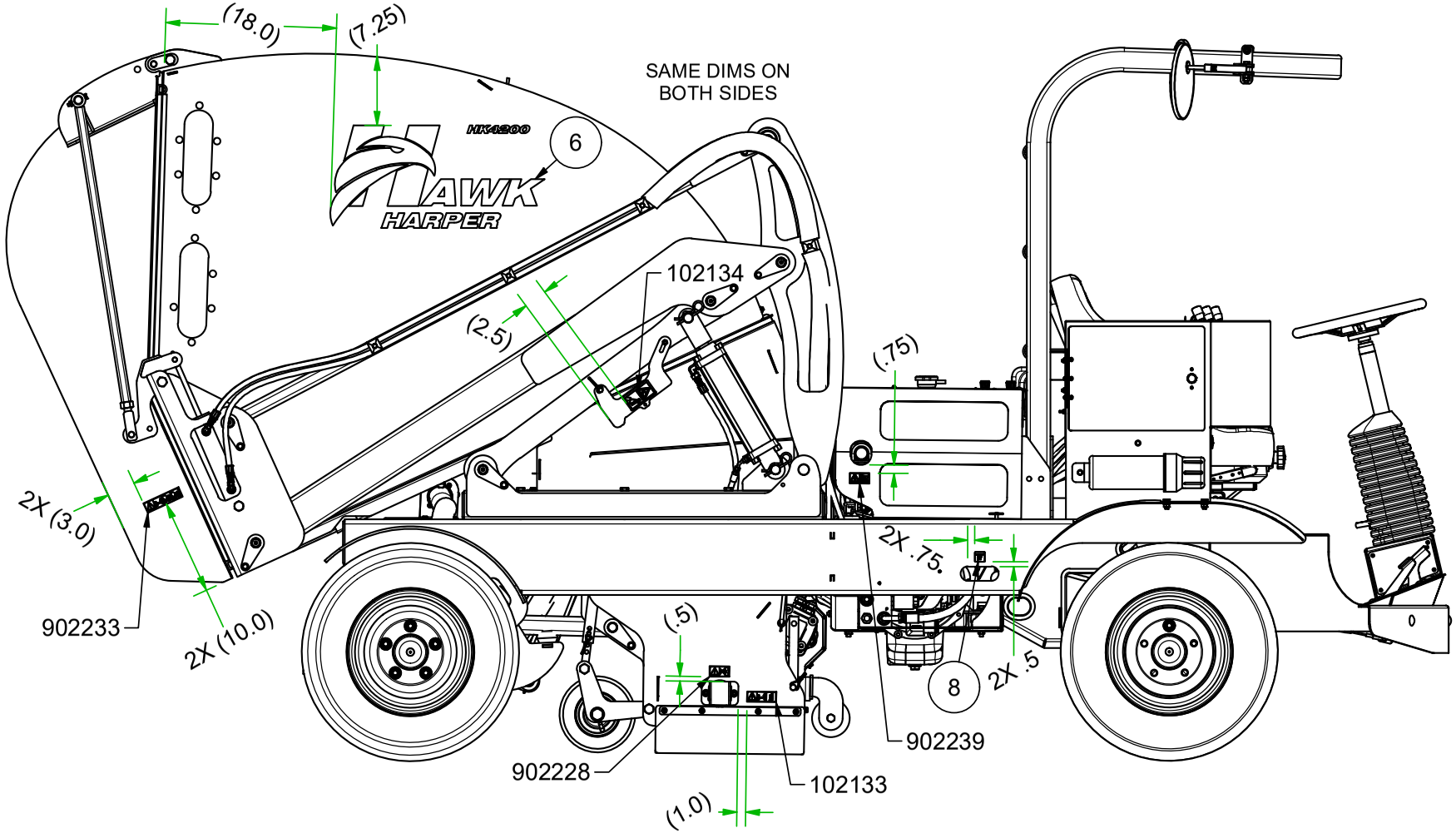

NOTE: ALL DIMENSIONS FOR REFENCE, PLACE AS CLOSE TO AS SHOWN AND FOR FULL VISIBILITY

5-17-2021

305108	REV: NC

LH VIEW DECAL INSTALLATION

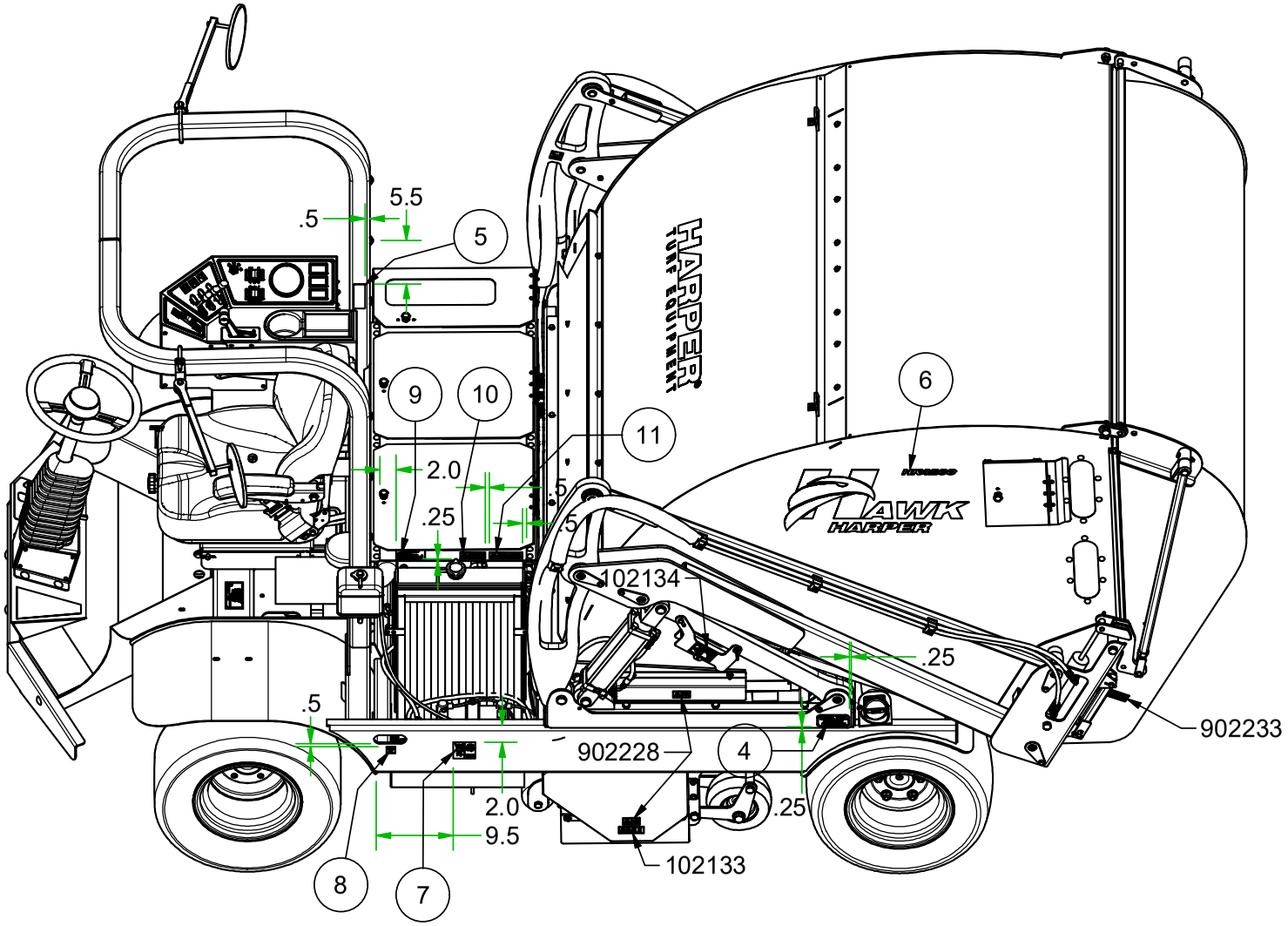

NOTE: ALL DIMENSIONS FOR REFENCE, PLACE AS CLOSE TO AS SHOWN AND FOR FULL VISIBILITY

5-17-2021

305108	REV: NC

5-17-2021

HOPPER DECAL INSTALLATION

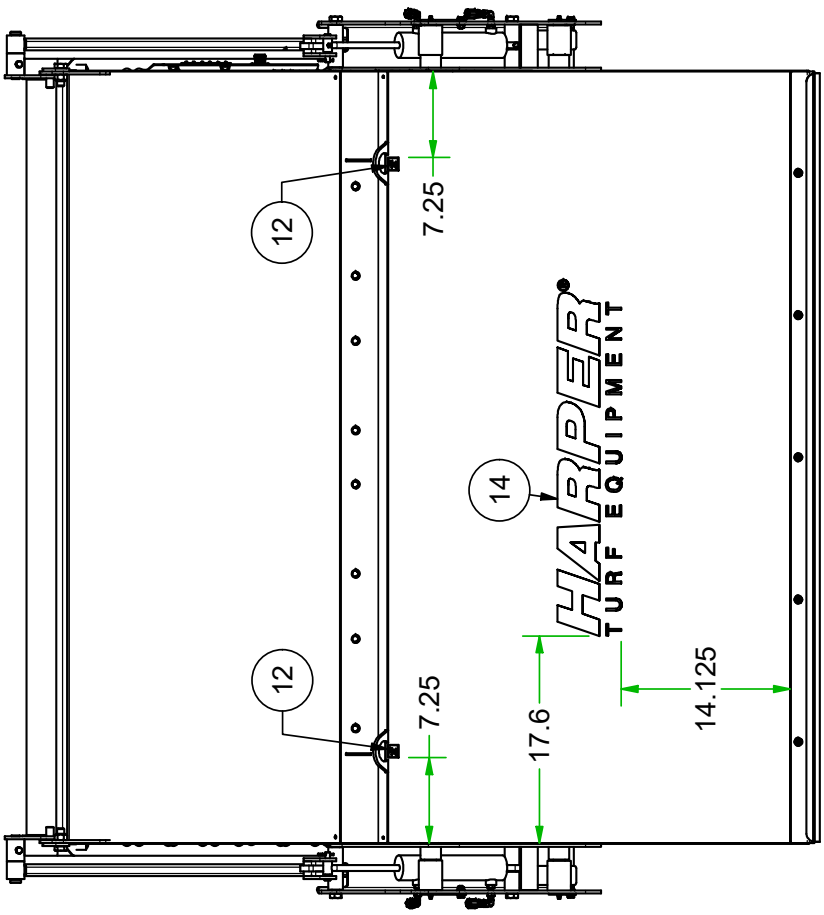

300082	REV: NC

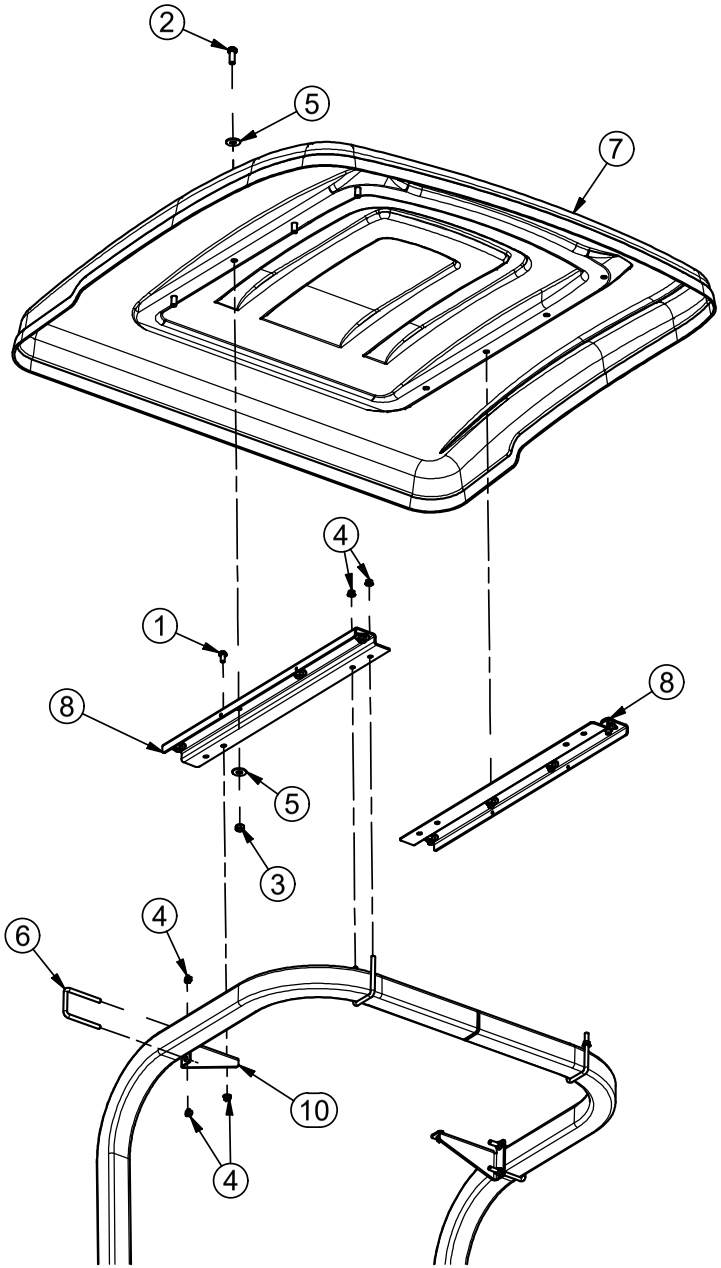

CANOPY

FACTORY INSTALL P/N: 300083
CUSTOMER INSTALL P/N: 300082

Parts List			
ITEM	QTY	PART #	DESCRIPTION
1	2	110437	BOLT, 3/8-16 X 0.75, WIZ FLANGE
2	8	110442	BOLT, 1/2-13 X 1.25
3	8	110615	NUT, 1/2-13, UNITORQUE LOCK
4	10	110645	NUT, 3/8-16 WIZ FLANGE
5	16	110658	WASHER, 1/2" FLAT STANDARD
6	4	111185	BOLT, SQUARE U, 3/8-16 x 2.50 x 4.0
7	1	302142	CANOPY, BLACK ABS PLASTIC
8	2	317332	BRKT, CANOPY SUPPORT
9	1	317333	BRKT, LH CANOPY MOUNT
10	1	317334	BRKT, RH CANOPY MOUNT

7-6-2020

WORK LIGHTS

FACTORY INSTALL P/N: 300085
CUSTOMER INSTALL P/N: 300084

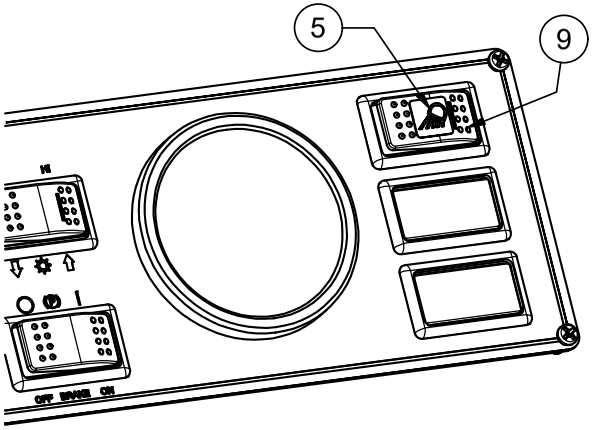

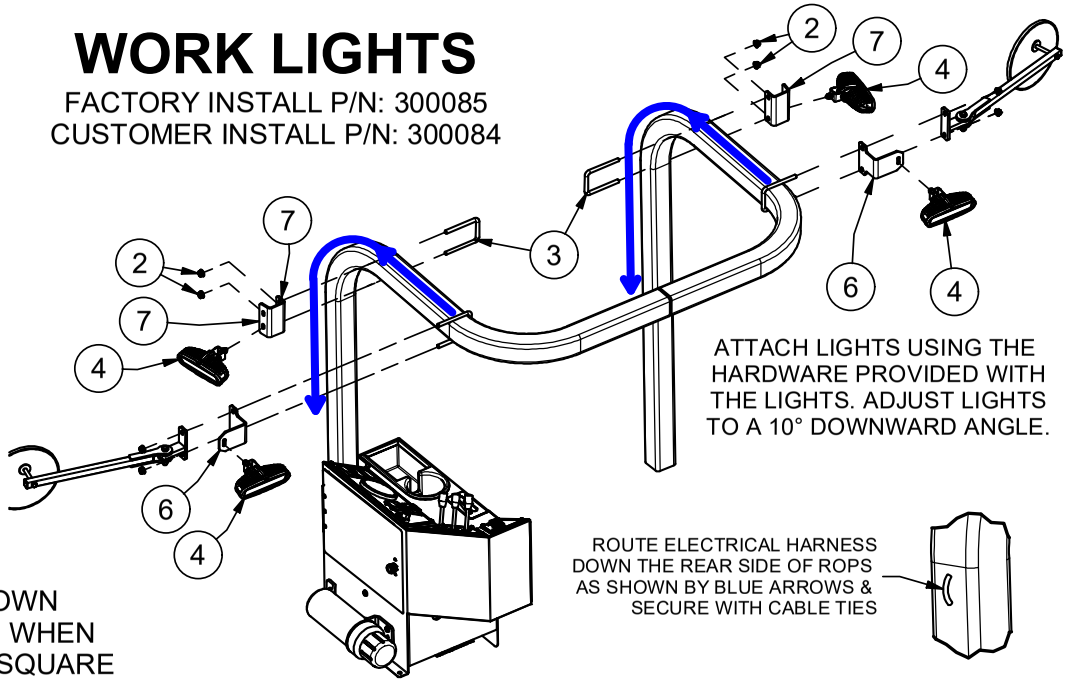

ATTACH LIGHTS USING THE HARDWARE PROVIDED WITH THE LIGHTS. ADJUST LIGHTS TO A 10° DOWNWARD ANGLE.

ROUTE ELECTRICAL HARNESS DOWN THE REAR SIDE OF ROPS AS SHOWN BY BLUE ARROWS & SECURE WITH CABLE TIES

INSTALLATION

- MOUNT WORK LIGHTS TO ROPS AS SHOWN IN THE EXPLODED DIAGRAM TO THE RIGHT. WHEN MOUNTING FRONT LIGHTS, USE THE SAME SQUARE U-BOLT THAT IS USED TO ATTACH THE MIRROR BRACKETS. POSITION WORK LIGHTS AND MIRRORS SO THERE IS NO INTERFERENCE. IF A CANOPY IS INSTALLED, MOUNT THE WORK LIGHTS TO THE REAR SIDE OF THE REAR CANOPY BRACKETS.
- THE CONSOLE CONTAINS 3 OPEN POSITIONS TO INSTALL THE ROCKER SWITCH. REMOVE 1 OF THE PLUGS TO INSTALL THE SWITCH.
- THE MACHINE IS ALSO EQUIPPED WITH 3 EXTRA CONNECTORS BELOW THE CONSOLE THAT PROVIDE +12V POWER / GROUND FOR THIS KIT. SEE ELECTRICAL SCHEMATIC ON PAGE 2.
- ROUTE THE WIRING HARNESS DOWN THE BACKSIDE OF THE ROPS AND SECURE USING THE CABLE TIES. ROUTE THE HARNESS FROM THE LH ROPS TO THE CONSOLE BY ROUTING THROUGH THE ENGINE COMPARTMENT.

Parts List			
ITEM	QTY	PART #	DESCRIPTION
1	12	100578	CABLE TIE 14" BLACK 50 Lb Tens
2	4	110645	NUT, 3/8-16 WIZ FLANGE
3	2	111185	BOLT, SQUARE U, 3/8-16 x 2.50 x 4.0
4	4	232139	Light, 5" Rectangle, Flood w/Connector
5	1	302158	DECAL, WORK LIGHT SWITCH
6	2	317395	BRKT, FRONT WORK LIGHT
7	2	317412	BRKT, REAR WORK LIGHT
8	1	332069	HARNESS, WORK LIGHT
9	1	832005	SWITCH, PADDLE, CARLING (29253)

2-25-2021

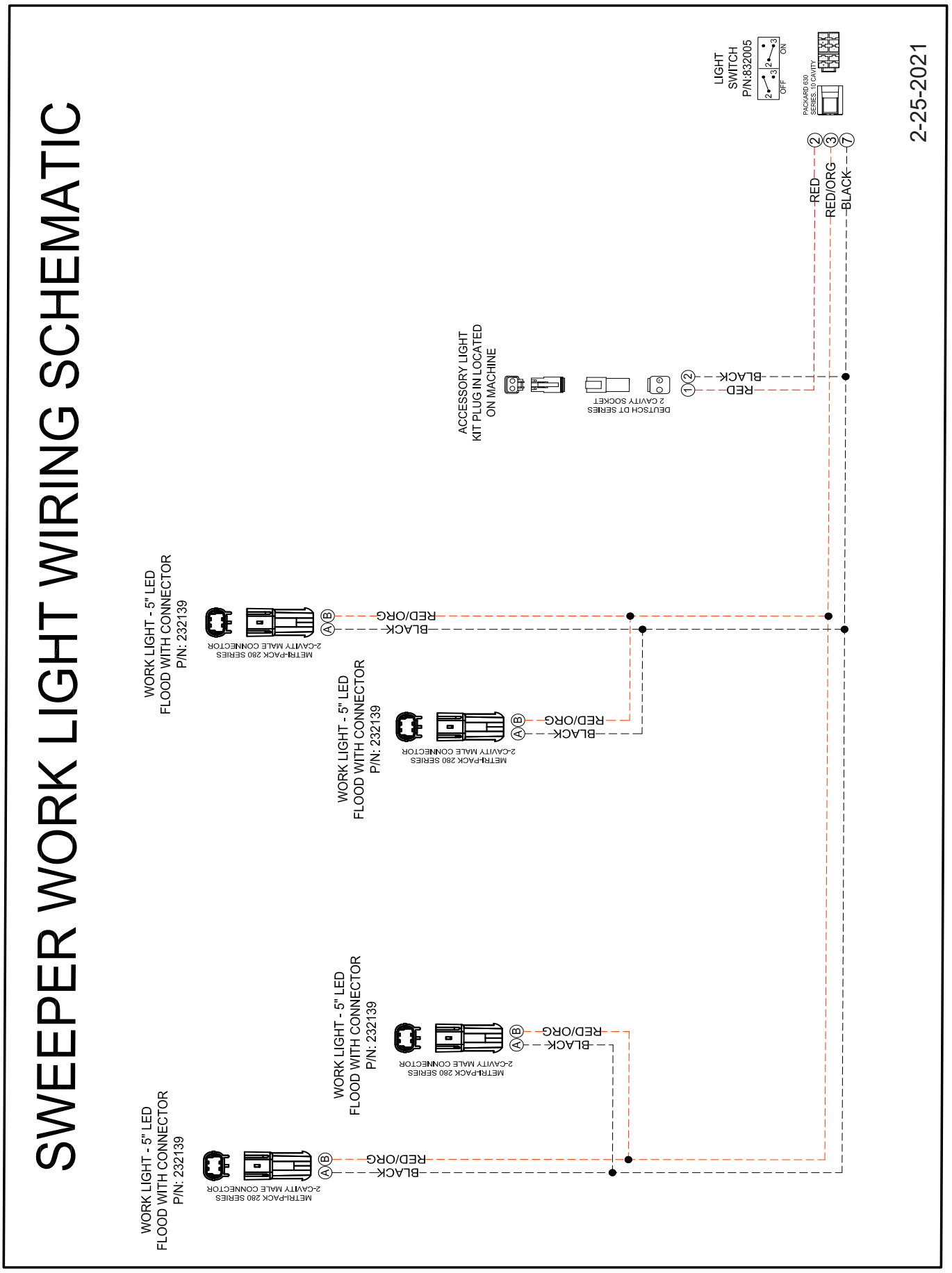
SWEEPER WORK LIGHT WIRING SCHEMATIC
2-25-2021
LIGHT SWITCH P/N:832005
OFF
ON
PACKARD 630 SERIES 10 CAVITY
RED
RED/ORG
BLACK
ACCESSORY LIGHT KIT PLUG IN LOCATED ON MACHINE
DEUTSCH DT SERIES 2 CAVITY SOCKET
RED
BLACK
WORK LIGHT - 5" LED FLOOD WITH CONNECTOR P/N: 232139
METRI-PACK 280 SERIES 2-CAVITY MALE CONNECTOR
RED/ORG
BLACK
WORK LIGHT - 5" LED FLOOD WITH CONNECTOR P/N: 232139
METRI-PACK 280 SERIES 2-CAVITY MALE CONNECTOR
RED/ORG
BLACK
WORK LIGHT - 5" LED FLOOD WITH CONNECTOR P/N: 232139
METRI-PACK 280 SERIES 2-CAVITY MALE CONNECTOR
RED/ORG
BLACK

BEACON

FACTORY INSTALL P/N: 300089
CUSTOMER INSTALL P/N: 300088

INSTALLATION

- FOR MOUNTING THE BEACON, USE THE HARDWARE INCLUDED IN THIS KIT (NOT THE HARDWARE INCLUDED WITH THE BEACON)
- IF THE CANOPY OPTION IS INSTALLED, THEN MOUNT THE BEACON TO THE TOP OF THE CANOPY AS SHOWN IN THE EXPLODED VIEW. POSITION THE BEACON IN THE CENTER OF THE CANOPY & THEN DRILL 3 - 9/32" HOLES IN THE PLASTIC CANOPY. DRILL A 3/4" HOLE TO ROUTE THE WIRE THROUGH (USE THE 317394 BRACKET TO LOCATE THE 3/4" HOLE).
- IF A CANOPY IS NOT INSTALLED, THEN MOUNT THE BEACON TO THE ROPS USING THE U-BOLT AS SHOWN IN THE EXPLODED VIEW.
- THE CONSOLE CONTAINS 3 OPEN POSITIONS TO INSTALL THE ROCKER SWITCH. REMOVE ONE OF THE PLUGS TO INSTALL THE SWITCH.
- THE MACHINE IS ALSO EQUIPPED WITH 3 EXTRA CONNECTORS BELOW THE CONSOLE THAT PROVIDE +12V POWER / GROUND FOR THIS KIT. SEE ELECTRICAL SCHEMATIC ON PAGE 2.
- ROUTE THE WIRING HARNESS ALONG THE BACKSIDE OF THE ROPS AND SECURE USING THE CABLE TIES.

ATTACHING BEACON TO CANOPY

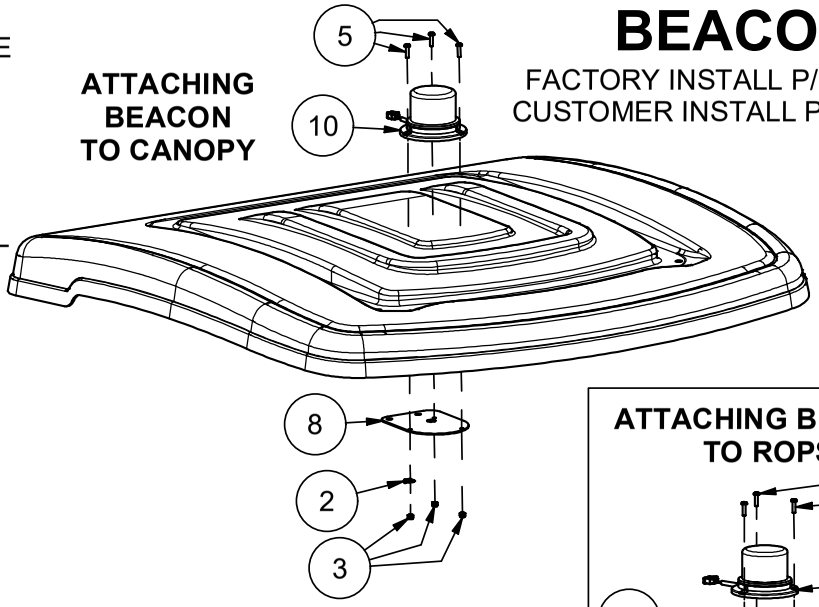

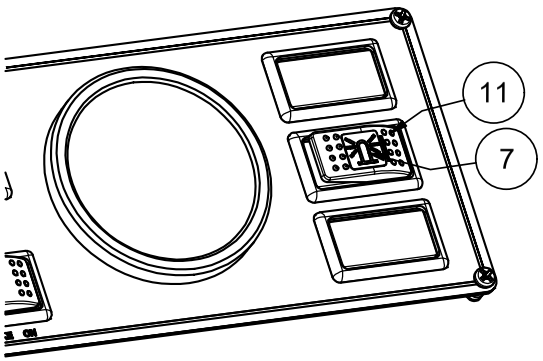

ATTACHING BEACON TO ROPS

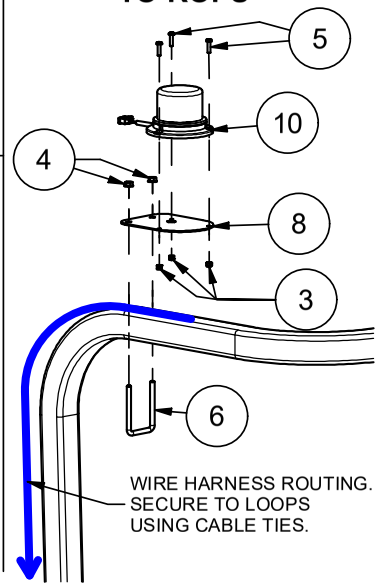

Parts List			
ITEM	QTY	PART #	DESCRIPTION
1	5	100578	CABLE TIE 14" BLACK 50 Lb Tens
2	1	110117	CLAMP, ADEL AC4 .265 HOLE
3	3	110630	NUT, 1/4-20 LOCK (NYLON INSERT)
4	2	110645	NUT, 3/8-16 WIZ FLANGE
5	3	110973	SCREW, 1/4-20 X 1 SS PHILLIPS PAN HEAD
6	1	111185	BOLT, SQUARE U, 3/8-16 x 2.50 x 4.0
7	1	302157	DECAL, BEACON
8	1	317394	BRKT, BEACON MOUNTING
9	1	332068	HARNESS, BEACON
10	1	335004	BEACON ASSY, LED
11	1	832005	SWITCH, PADDLE, CARLING (29253)

7-8-2021

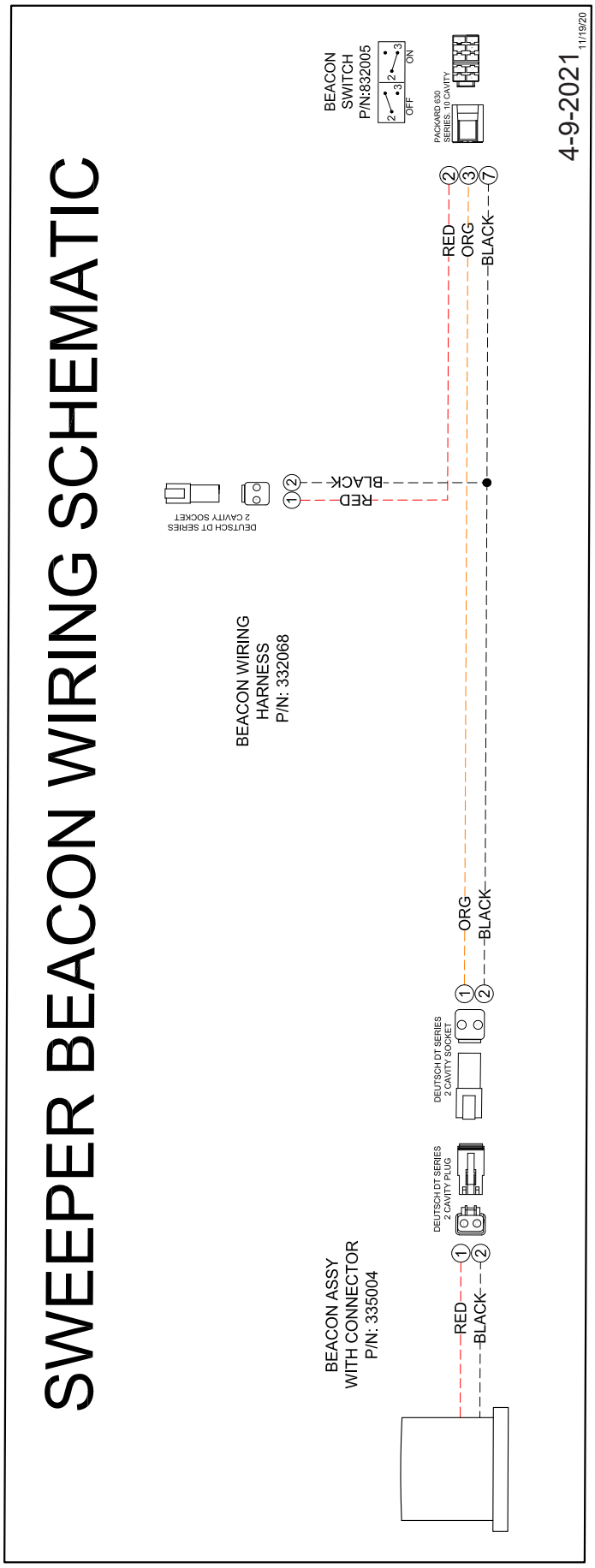
SWEEPER BEACON WIRING SCHEMATIC
4-9-2021 11/19/20
BEACON SWITCH P/N:832005
ON
OFF
PACKARD 630 SERIES, 10 CAVITY
RED
ORG
BLACK
DEUTSCH DT SERIES 2 CAVITY SOCKET
BLACK
RED
BEACON WIRING HARNESS P/N: 332068
DEUTSCH DT SERIES 2 CAVITY SOCKET
ORG
BLACK
DEUTSCH DT SERIES 2 CAVITY PLUG
RED
BLACK
BEACON ASSY WITH CONNECTOR P/N: 335004

300090	REV: A

HAWK RIGHT CURB BRUSH INSTALL

Parts List			
ITEM	QTY	PART #	DESCRIPTION
1	1	110125	BOLT, 1/2-13 X 2.25 GR 5 ZINC PLATE
2	4	110290	NUT, 1/4-20 WIZ FLANGE
3	2	110358	Bolt, 1/4-20 X 0.625 in Carriage
4	2	110392	Bolt, 3/8-16 X 2 in Carriage
5	1	110396	BOLT, 5/16-18 X 2.5
6	4	110400	BOLT, 3/8-16 X 2.0
7	4	110420	BOLT, 3/8-16 X 1.0
8	1	110434	BOLT, 1/4-20 X 0.5, WIZ FLANGE
9	2	110474	BOLT, 1/4-20 X 1-1/2
10	2	110597	NUT, 5/8-11 HEX
11	3	110600	NUT, 5/16-18, UNITORQUE LOCK
12	1	110606	NUT, 5/16-18 WIZ FLANGE
13	1	110615	NUT, 1/2-13, UNITORQUE LOCK
14	4	110621	NUT, 3/8-16, UNITORQUE LOCK
15	1	110639	NUT, 5/8-11, UNITORQUE LOCK
16	2	110658	WASHER, 1/2" FLAT STANDARD

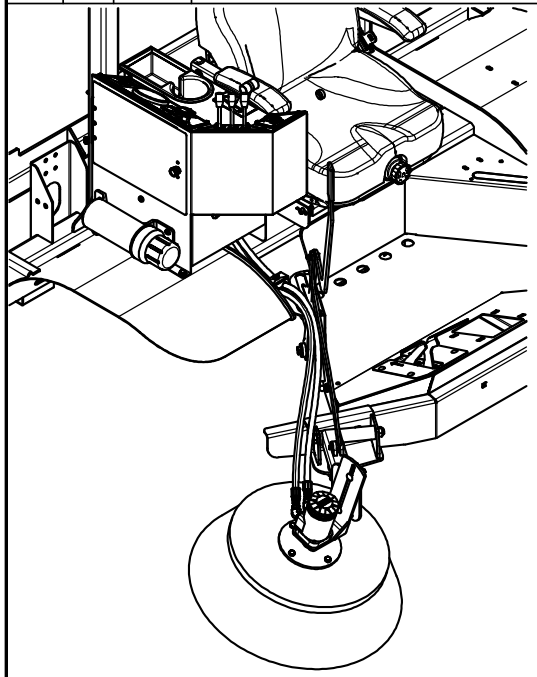

Parts List			
ITEM	QTY	PART #	DESCRIPTION
17	2	110665	WASHER, 5/16" FLAT STANDARD
18	4	110672	WASHER, 3/8" LOCK
19	1	110674	WASHER, 5/16" LOCK
20	6	110676	WASHER, 3/8" FLAT STANDARD
21	1	110895	Bolt, 5/8-11 X 3 in Carriage
22	1	111189	Bolt, 5/8-11 X 7.5, HHCS Gr 5 Zinc
23	1	111199	BOLT, 3/8 X .625 SHOULDER SHCS, ZINC
24	1	120216	ADAPTER, 6MJ-6FJX-6MJ
25	1	120239	ADAPTER, 6MJ-8MB
26	4	120319	ADAPTER, 6MJ-6MB
27	2	120753	Jic(-6) to Male O-ring (-10), 45 degrees
28	1	211747	FRICTION WASHER 1.5"
29	2	302063	KNOB, ALUMINUM 3/8-16
30	1	302064	BRUSH, 24" x 6" x 40 DEG
31	1	302160	DECAL, CURB BRUSH
32	1	312022	CLIP, HAIRPIN 3/32 x 1.625
33	1	312039	GAS SPRING, 4" STROKE, 120LBS
34	1	312041	CLEVIS PIN, 3/8 X 1.5, ZINC
35	1	315401	WLDMT, CURB BRUSH HANDLE RIGHT

Parts List			
ITEM	QTY	PART #	DESCRIPTION
36	1	315403	WELDMENT, CURB BRUSH ARM, SWPR
37	1	315404	WLDMT, CURB BRUSH BASE RIGHT, SWPR
38	1	315406	WELDMENT, CURB BRUSH MOUNT, SWPR
39	1	315407	WELDMENT, BRUSH ADAPTER, SWPR
40	1	317258	WASHER, 2.0 X .344 X .12
41	1	317261	TENSIONER, GEAR MOUNT, BUSHING
42	1	317398	LINK, CURB BRUSH LIFT
43	1	317411	PLATE, CURB BRUSH NOTCH
44	2	320400	HOSE ASSY, RH CURB BRUSH
45	1	320402	HOSE ASSY, CURB BRUSH INLET
46	1	320403	HOSE ASSY, CURB BRUSH RETURN
47	1	322099	HIGH PRESSURE CARRYOVER PLUG
48	1	323069	VALVE ASSEMBLY, 2-WAY/4 POSITION
49	1	332070	HARNESS, CURB BRUSH
50	1	820097	CLAMP BODY
51	1	820098	COVER PLATE
52	1	832005	SWITCH, PADDLE, CARLING (29253)
53	1	832024	MOUNT, SWITCH (VMS)
54	1	910044	COVER, VINYL .25 X 1.5 X 4 GRIP
55	1	922004	MOTOR, EATON 101-1009

FOR SERIAL NUMBERS **21A11** AND PRIOR, SEE PAGES **8-9** FOR DETAILS ON UPDATES NEEDED FOR CURB BRUSH INSTALLATION

CUSTOMER INSTALL: 300090
FACTORY INSTALL: 300091

9-17-2021

9-17-2021

CURB BRUSH PLUMBING (RIGHT)

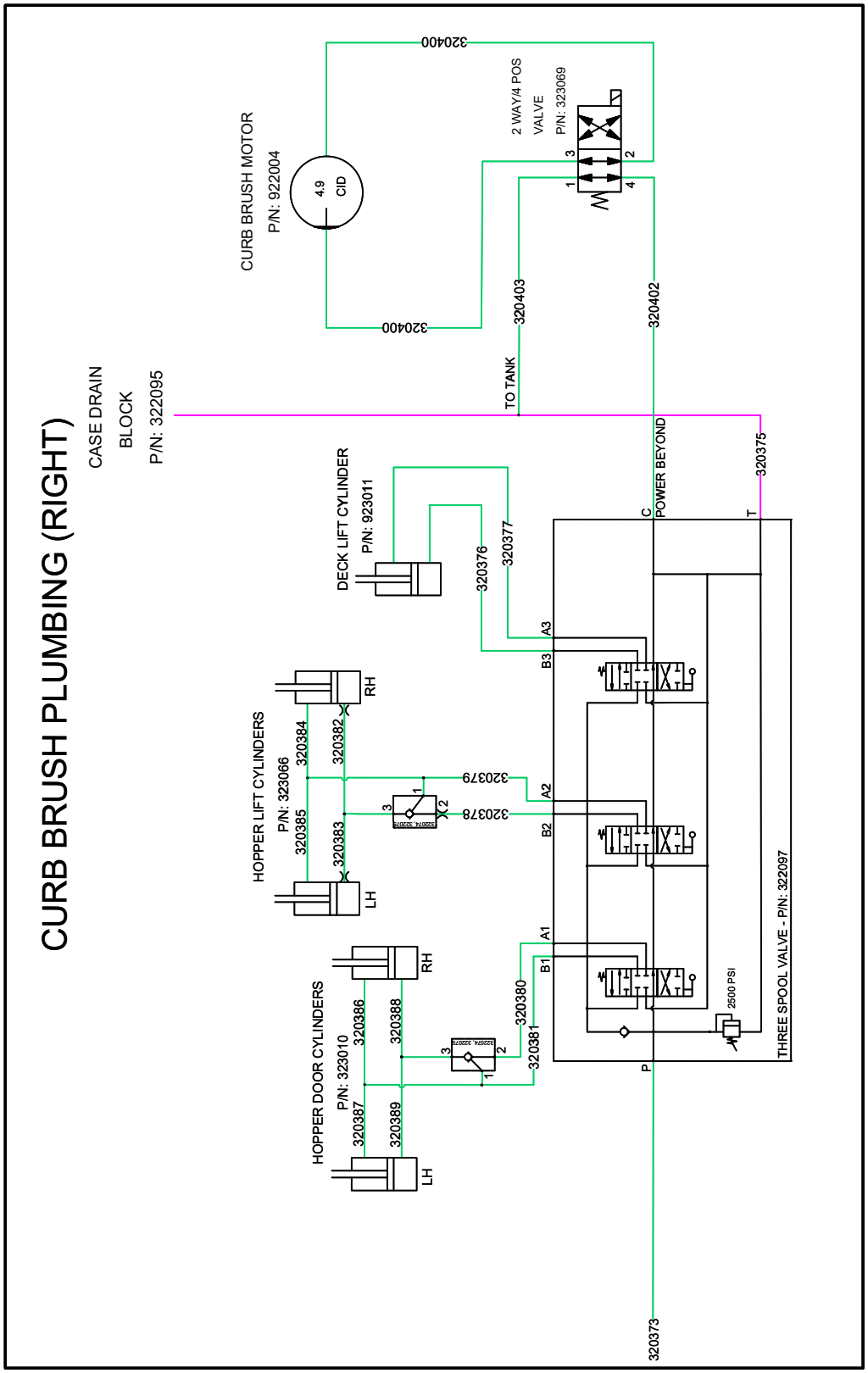

300090	REV: A

VALVE ASSEMBLIES

Parts List			
ITEM	QTY	PART #	DESCRIPTION
26	4	120319	ADAPTER, 6MJ-6MB
48	1	323069	VALVE ASSEMBLY, 2-WAY/4 POSITION
49.1	1	222052	Valve, #8 Spool, 4-Way 2-Position
49.2	1	322100	BODY, 8 SIZE, 4 WAY, SAE-6
49.3	1	322101	COIL, 12V ERZ

Parts List			
ITEM	QTY	PART #	DESCRIPTION
24	1	120216	ADAPTER, 6MJ-6FJX-6MJ
25	1	120239	ADAPTER, 6MJ-8MB
47	1	322099	HIGH PRESSURE CARRYOVER PLUG

See Next Page For Plug Install Instruction

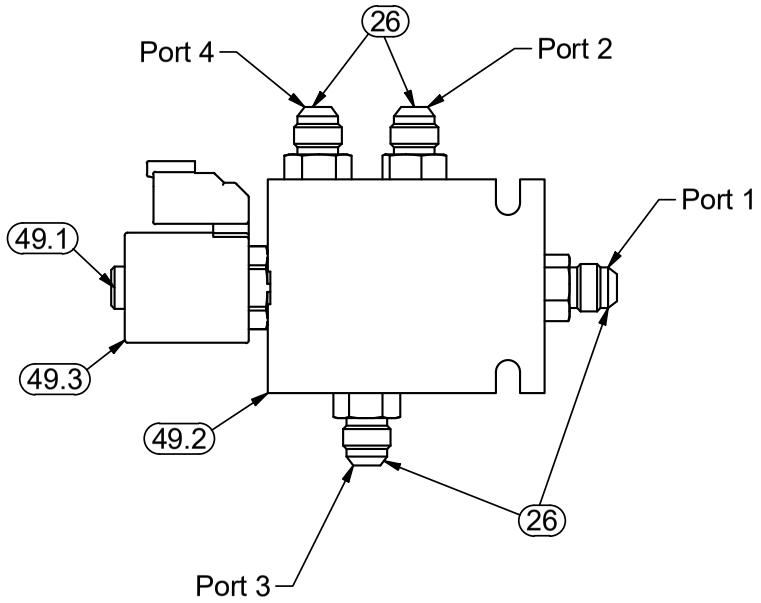

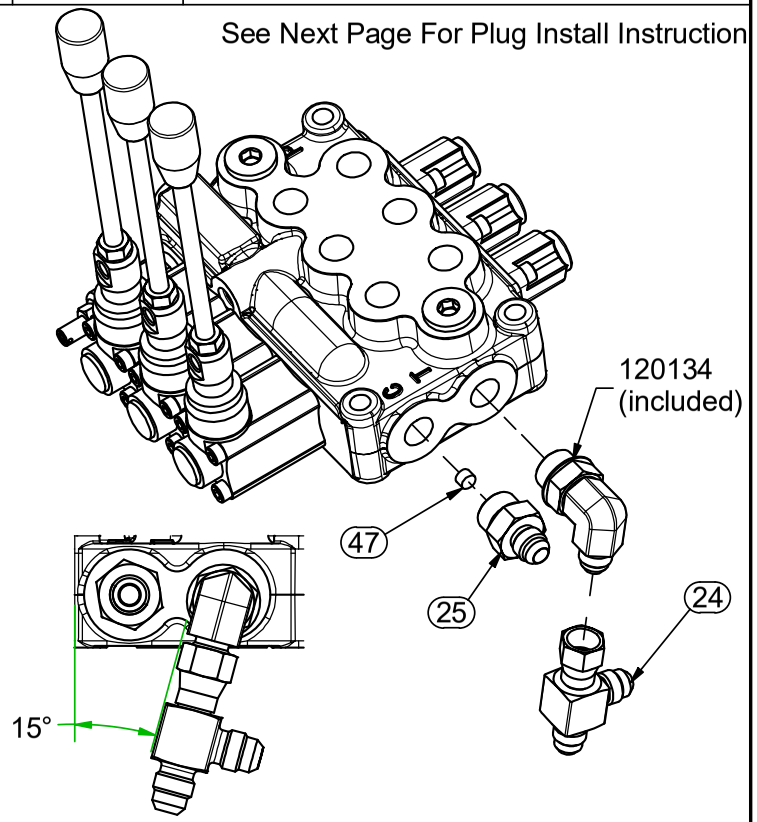

9-17-2021

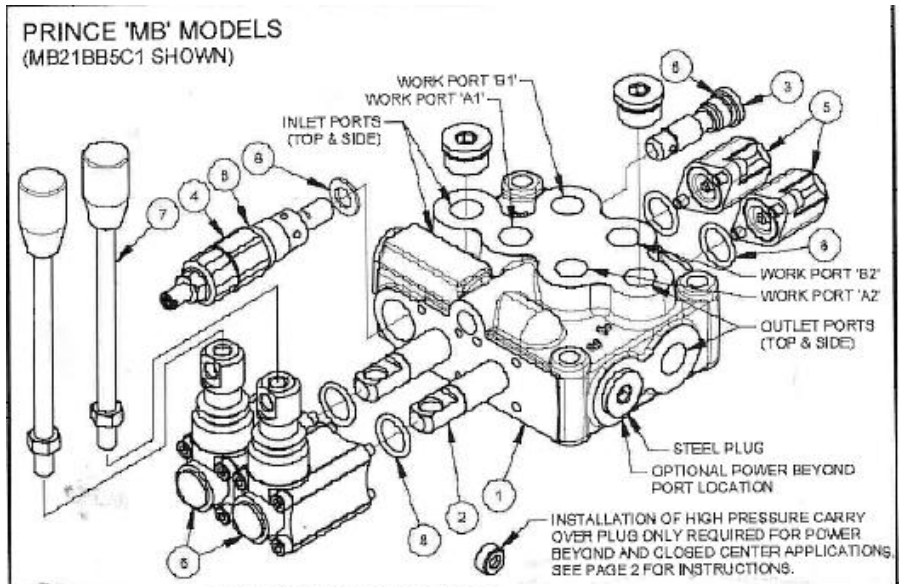
PRINCE 'MB' MODELS
(MB21BB5C1 SHOWN)
WORK PORT 'B1'
WORK PORT 'A1'
INLET PORTS
(TOP & SIDE)
WORK PORT 'B2'
WORK PORT 'A2'
OUTLET PORTS
(TOP & SIDE)
STEEL PLUG
OPTIONAL POWER BEYOND
PORT LOCATION
INSTALLATION OF HIGH PRESSURE CARRY
OVER PLUG ONLY REQUIRED FOR POWER
BEYOND AND CLOSED CENTER APPLICATIONS.
SEE PAGE 2 FOR INSTRUCTIONS.

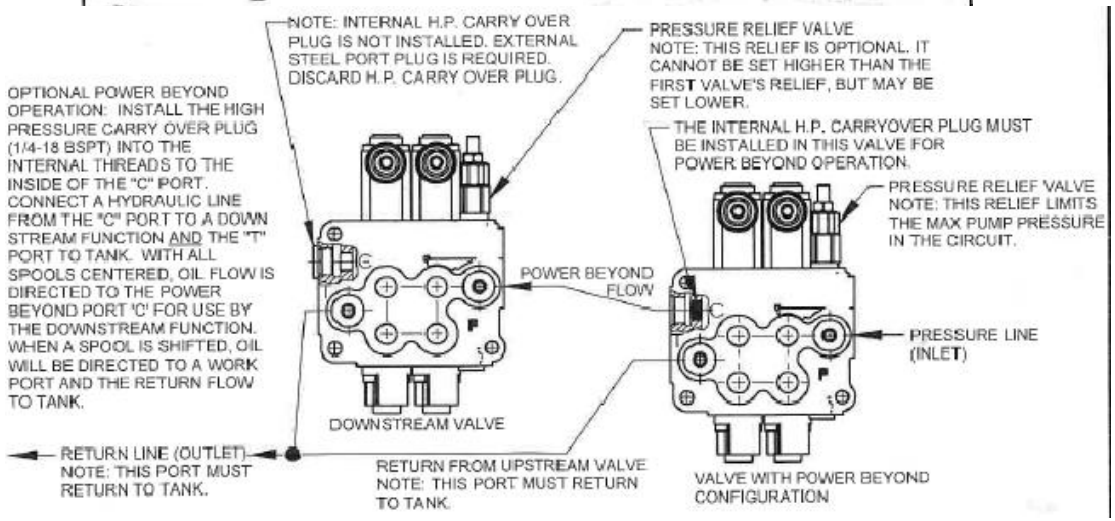
NOTE: INTERNAL H.P. CARRY OVER
PLUG IS NOT INSTALLED. EXTERNAL
STEEL PORT PLUG IS REQUIRED.
DISCARD H.P. CARRY OVER PLUG.
PRESSURE RELIEF VALVE
NOTE: THIS RELIEF IS OPTIONAL. IT
CANNOT BE SET HIGHER THAN THE
FIRST VALVE'S RELIEF, BUT MAY BE
SET LOWER.
OPTIONAL POWER BEYOND
OPERATION: INSTALL THE HIGH
PRESSURE CARRY OVER PLUG
(1/4-18 BSPT) INTO THE
INTERNAL THREADS TO THE
INSIDE OF THE "C" PORT.
CONNECT A HYDRAULIC LINE
FROM THE "C" PORT TO A DOWN
STREAM FUNCTION AND THE "T"
PORT TO TANK. WITH ALL
SPOOLS CENTERED, OIL FLOW IS
DIRECTED TO THE POWER
BEYOND PORT 'C' FOR USE BY
THE DOWNSTREAM FUNCTION.
WHEN A SPOOL IS SHIFTED, OIL
WILL BE DIRECTED TO A WORK
PORT AND THE RETURN FLOW
TO TANK.
THE INTERNAL H.P. CARRYOVER PLUG MUST
BE INSTALLED IN THIS VALVE FOR
POWER BEYOND OPERATION.
PRESSURE RELIEF VALVE
NOTE: THIS RELIEF LIMITS
THE MAX PUMP PRESSURE
IN THE CIRCUIT.
POWER BEYOND
FLOW
PRESSURE LINE
(INLET)
DOWNSTREAM VALVE
RETURN LINE (OUTLET)
NOTE: THIS PORT MUST
RETURN TO TANK.
RETURN FROM UPSTREAM VALVE
NOTE: THIS PORT MUST RETURN
TO TANK.
VALVE WITH POWER BEYOND
CONFIGURATION

9-17-2021

300090 REV: A

Curb Brush Hydraulics

323069 (50) mounts inside console.
Console Wall hidden for clarity.

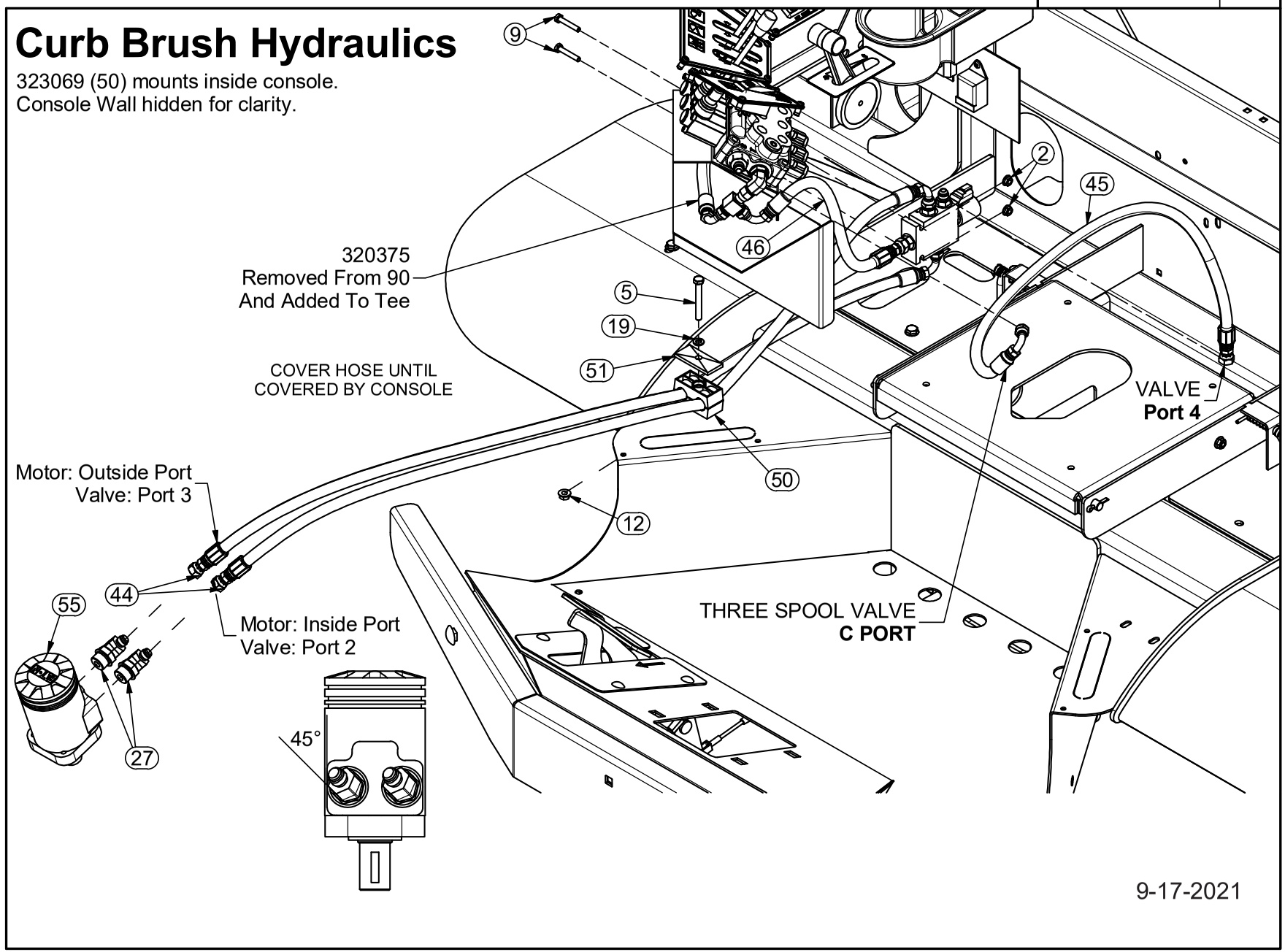

300090	REV: A

CURB BRUSH HANDLE AND BRUSH INSTALL

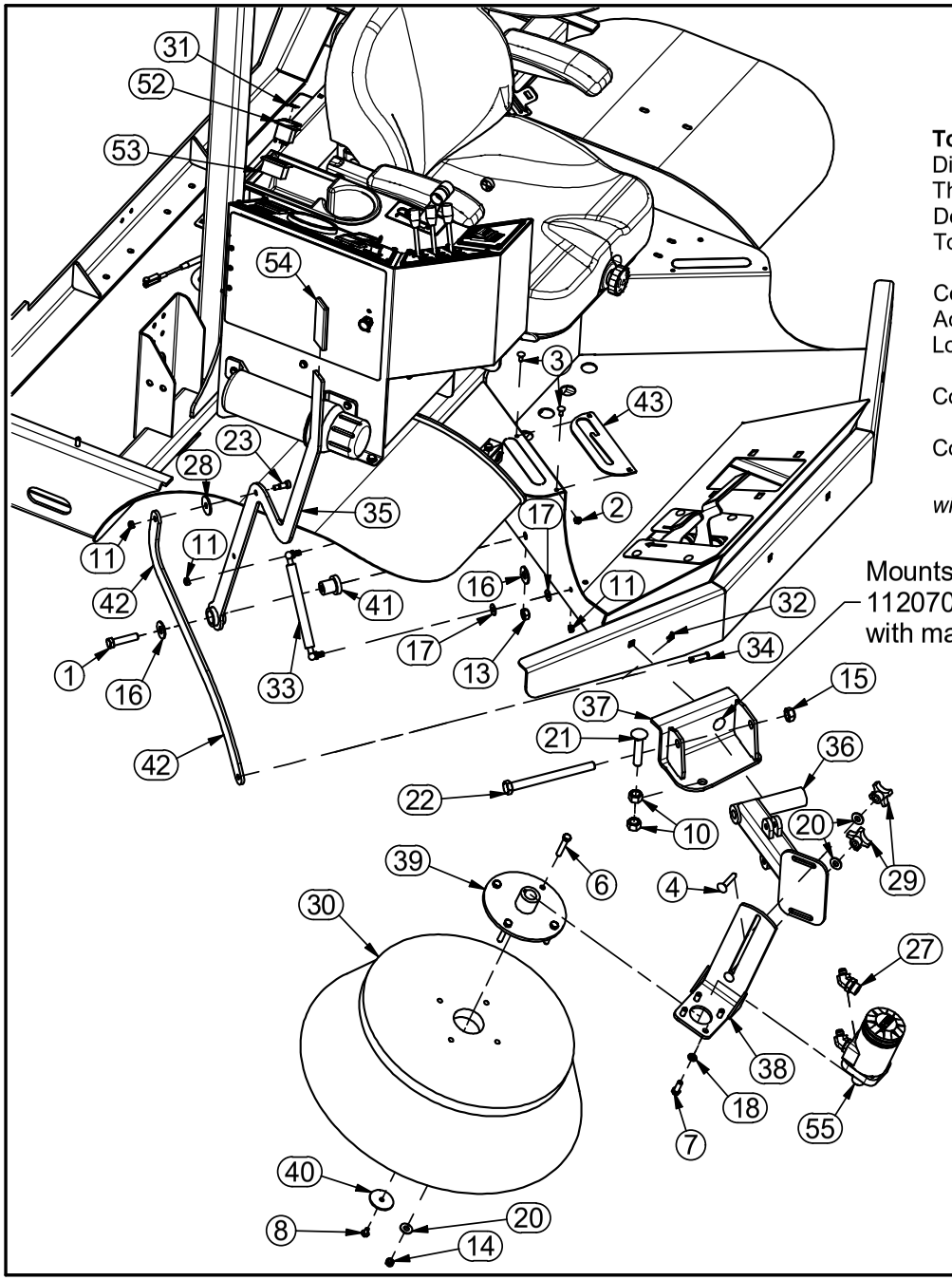

To Install Wiring Harness (332070):
Disconnect Harness 332064 & 332063 At The 6 Cavity Deutch Connector. This Plug Is Located Inside Operator's Console. It Is The Only 6 Cavity Deutch Connector In The Console. Connect Harness 332064 and 332063 To The Harness Included With This Kit (332070)

Connect 2 Cavity Deutsch, Black Wire Only, To One Of The 3 Available Accessory Plugs (Harness 332064). These 2 Cavity Plugs Should Be Located Near The Fuse Block Inside The Console.

Connect Packard 10 Cavity Switch To 832005 (P# 52 Shown To The Left).

Connect 2 Cavity Deutsch, Blu/Org & Blk, To 323069 Valve.

wiring harness on next page for reference

FACTORY SUGGESTED SETTINGS

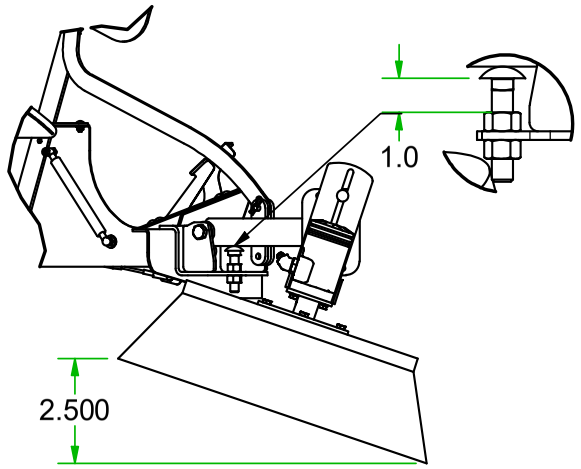

9-17-2021

300090	REV: A

SWEEPER CURB BRUSH WIRING SCHEMATIC

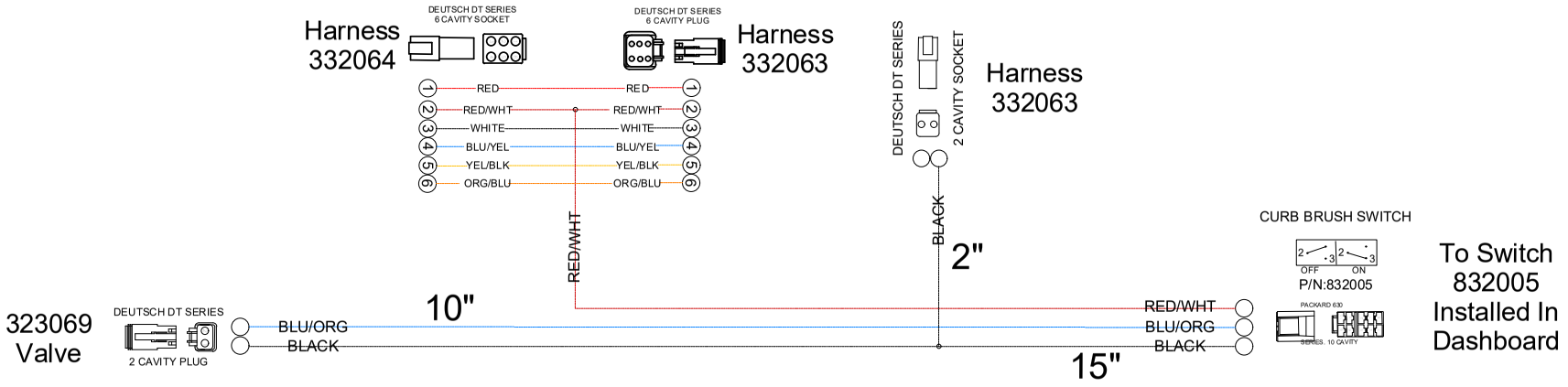

9-17-2021

300090	REV: A

MODIFICATION INSTRUCTIONS (HYDRAULICS INSTALL)

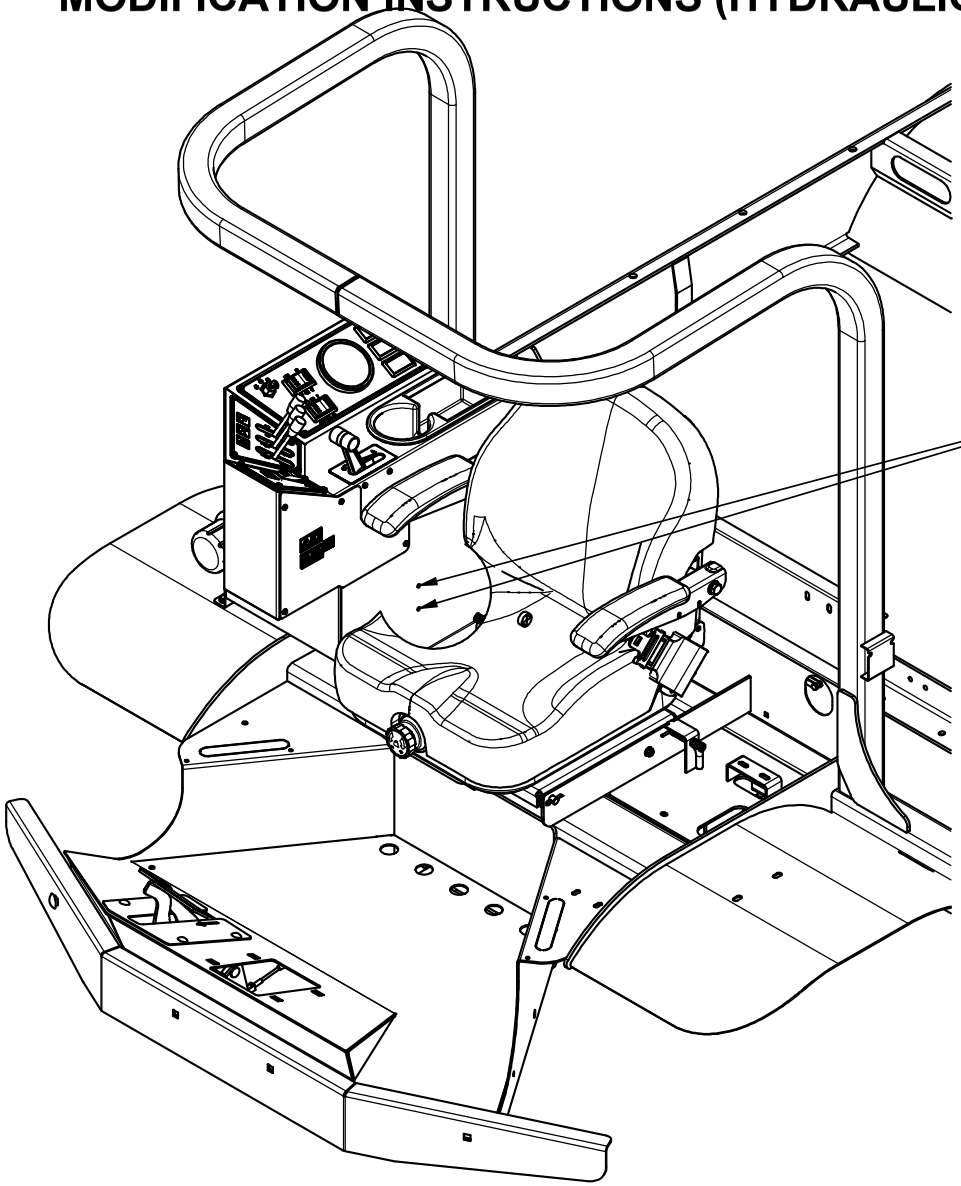

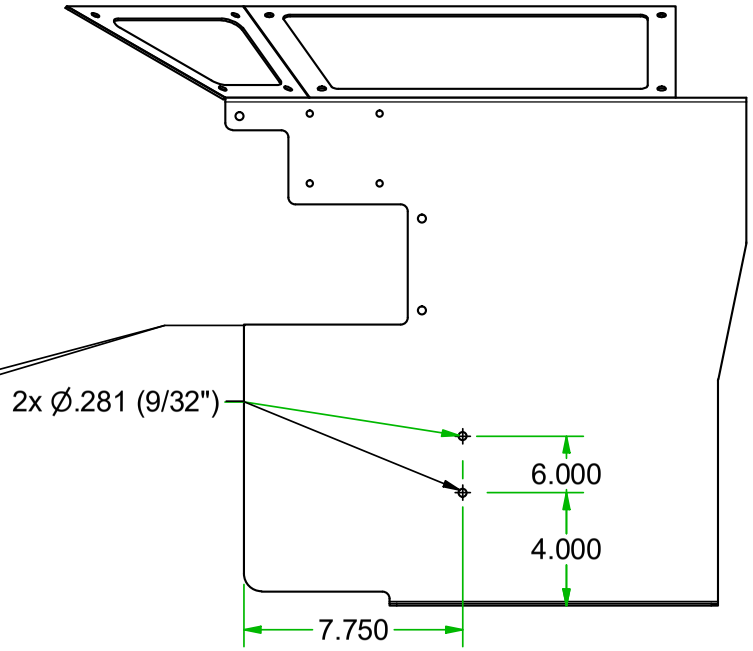

For Right Hand Curb Brush, The
Following Cutouts Will Need To Be Made:

Holes For Curb Brush Valve (2X)

9-17-2021

317162 REV: B

MODIFICATION INSTRUCTIONS (MECHANICAL INSTALL)

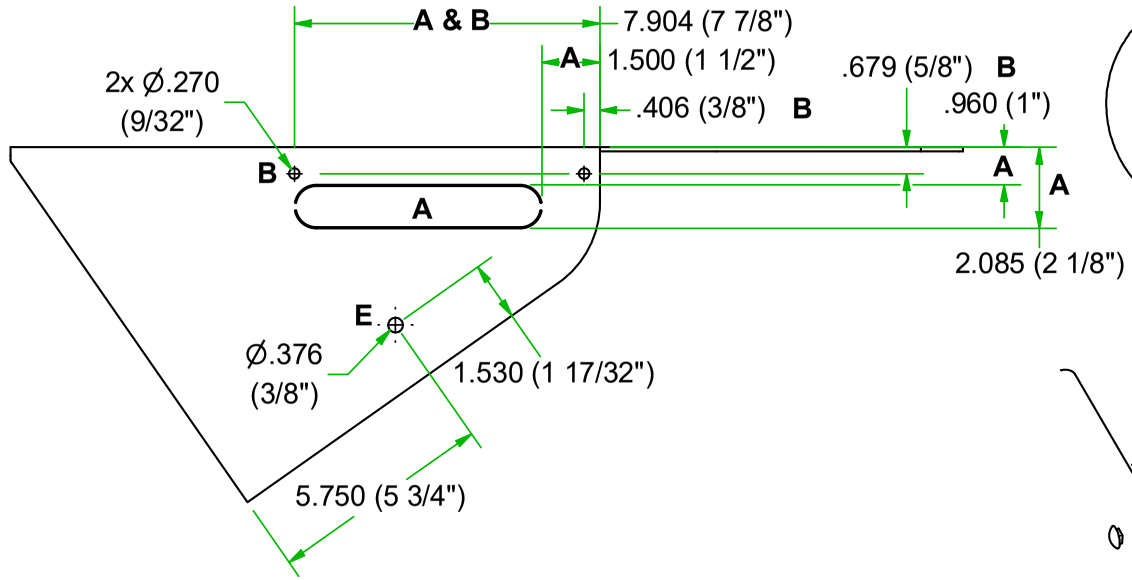

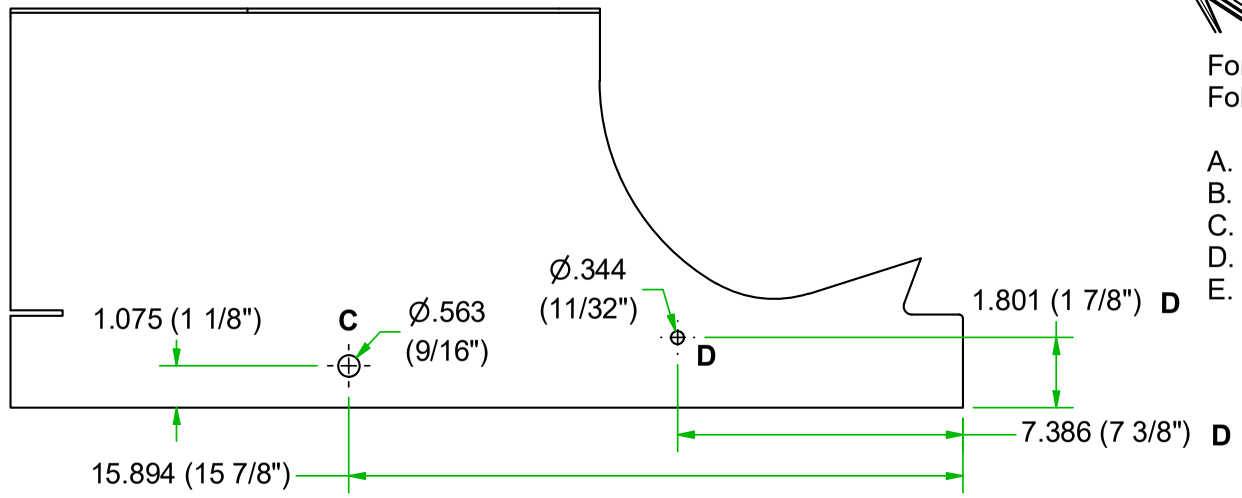

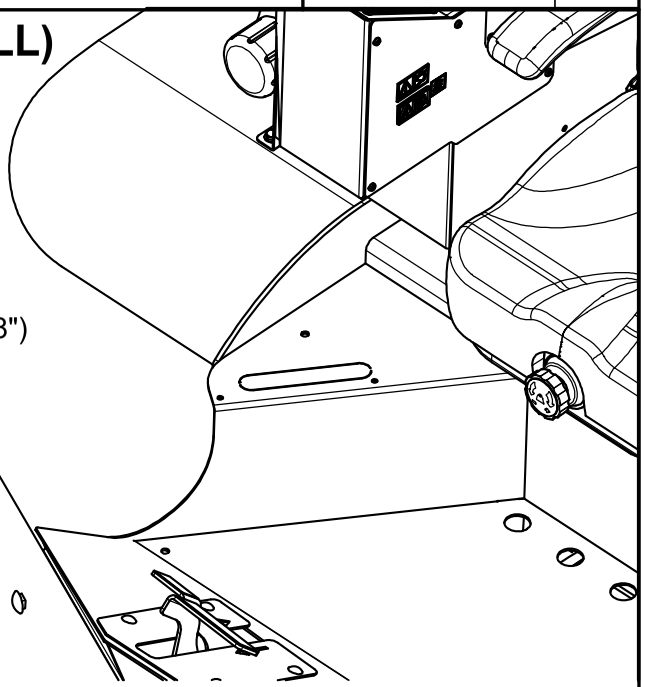

For Right Hand Curb Brush, The Following Cutouts Will Need To Be Made.

A. Cutout For Handle Mount (1X)
B. Holes For Curb Brush Plate Mount (2X)
C. Pivot Hole For Curb Brush Handle (1X)
D. Gas Spring Mount Hole (1X)
E. Hose Clamp Hole Mount

9-17-2021

300092 REV: NC

Parts List				Parts List			
ITEM	QTY	PART #	DESCRIPTION	ITEM	QTY	PART #	DESCRIPTION
1	1	110125	BOLT, 1/2-13 X 2.25 GR 5 ZINC PLATE	31	1	302160	DECAL, CURB BRUSH
2	4	110290	NUT, 1/4-20 WIZ FLANGE	32	1	312022	CLIP, HAIRPIN 3/32 x 1.625
3	2	110358	Bolt, 1/4-20 X 0.625 in Carriage	33	1	312039	GAS SPRING, 4" STROKE, 120LBS
4	2	110392	Bolt, 3/8-16 X 2 in Carriage	34	1	312041	CLEVIS PIN, 3/8 X 1.5, ZINC
5	1	110396	BOLT, 5/16-18 X 2.5	35	1	315402	WLDMNT, CURB BRUSH HANDLE LEFT, SWPR
6	4	110400	BOLT, 3/8-16 X 2.0				
7	4	110420	BOLT, 3/8-16 X 1.0	36	1	315403	WELDMENT, CURB BRUSH ARM, SWPR
8	1	110434	BOLT, 1/4-20 X 0.5, WIZ FLANGE	37	1	315405	WELDMENT, CURB BRUSH BASE LEFT, SWPR
9	2	110474	BOLT, 1/4-20 X 1-1/2				
10	2	110597	NUT, 5/8-11 HEX	38	1	315406	WELDMENT, CURB BRUSH MOUNT, SWPR
11	3	110600	NUT, 5/16-18, UNITORQUE LOCK	39	1	315407	WELDMENT, BRUSH ADAPTER, SWPR
12	1	110606	NUT, 5/16-18 WIZ FLANGE	40	1	317258	WASHER, 2.0 X .344 X .12
13	1	110615	NUT, 1/2-13, UNITORQUE LOCK	41	1	317261	TENSIONER, GEAR MOUNT, BUSHING
14	4	110621	NUT, 3/8-16, UNITORQUE LOCK	42	1	317398	LINK, CURB BRUSH LIFT
15	1	110639	NUT, 5/8-11, UNITORQUE LOCK	43	1	317411	PLATE, CURB BRUSH NOTCH
16	2	110658	WASHER, 1/2" FLAT STANDARD	44	2	320401	HOSE ASSY, LH CURB BRUSH
17	2	110665	WASHER, 5/16" FLAT STANDARD	45	1	320402	HOSE ASSY, CURB BRUSH INLET
18	4	110672	WASHER, 3/8" LOCK	46	1	320403	HOSE ASSY, CURB BRUSH RETURN
19	1	110674	WASHER, 5/16" LOCK	47	1	322099	HIGH PRESSURE CARRYOVER PLUG
20	6	110676	WASHER, 3/8" FLAT STANDARD	48	1	323069	VALVE ASSEMBLY, 2-WAY/4 POSITION
21	1	110895	Bolt, 5/8-11 X 3 in Carriage	49	1	332070	HARNESS, CURB BRUSH
22	1	111189	Bolt, 5/8-11 X 7.5, HHCS Gr 5 Zinc	50	1	820097	CLAMP BODY
23	1	111199	BOLT, 3/8 X .625 SHOULDER SHCS	51	1	820098	COVER PLATE
24	1	120216	ADAPTER, 6MJ-6FJX-6MJ	52	1	832005	SWITCH, PADDLE, CARLING (29253)
25	1	120239	ADAPTER, 6MJ-8MB	53	1	832024	MOUNT, SWITCH (VMS)
26	4	120319	ADAPTER, 6MJ-6MB	54	1	910044	COVER, VINYL .25 X 1.5 X 4 GRIP
27	2	120753	Jic(-6) to Male O-ring (-10), 45 degrees	55	1	922004	MOTOR, EATON 101-1009
28	1	211747	FRICTION WASHER 1.5"				
29	2	302063	KNOB, ALUMINUM 3/8-16				
30	1	302064	BRUSH, 24" x 6" x 40 DEG				

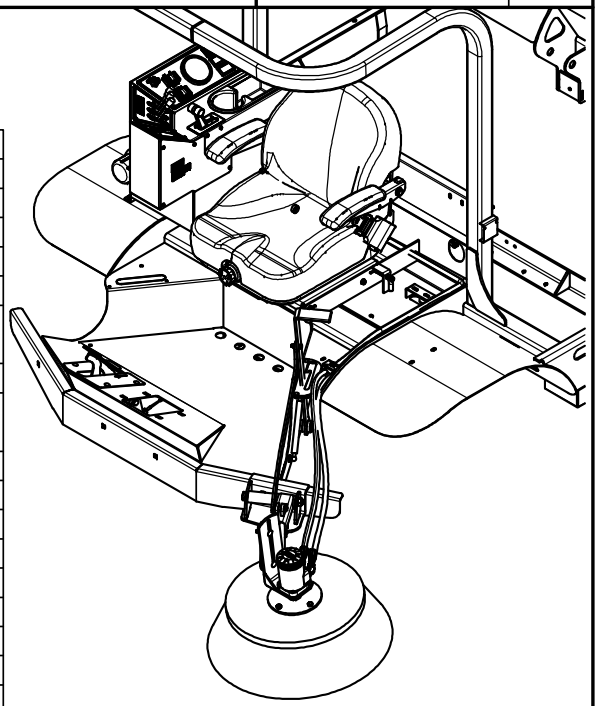

FOR SERIAL NUMBERS **21A11** AND PRIOR SEE PAGES **8-9** FOR DETAILS ON UPDATES NEEDED FOR CURB BRUSH INSTALLATION

HAWK LEFT CURB BRUSH INSTALL

CUSTOMER INSTALL: 300092

FACTORY INSTALL: 300093

9-17-2021

300092	REV: NC

CURB BRUSH PLUMBING (LEFT)

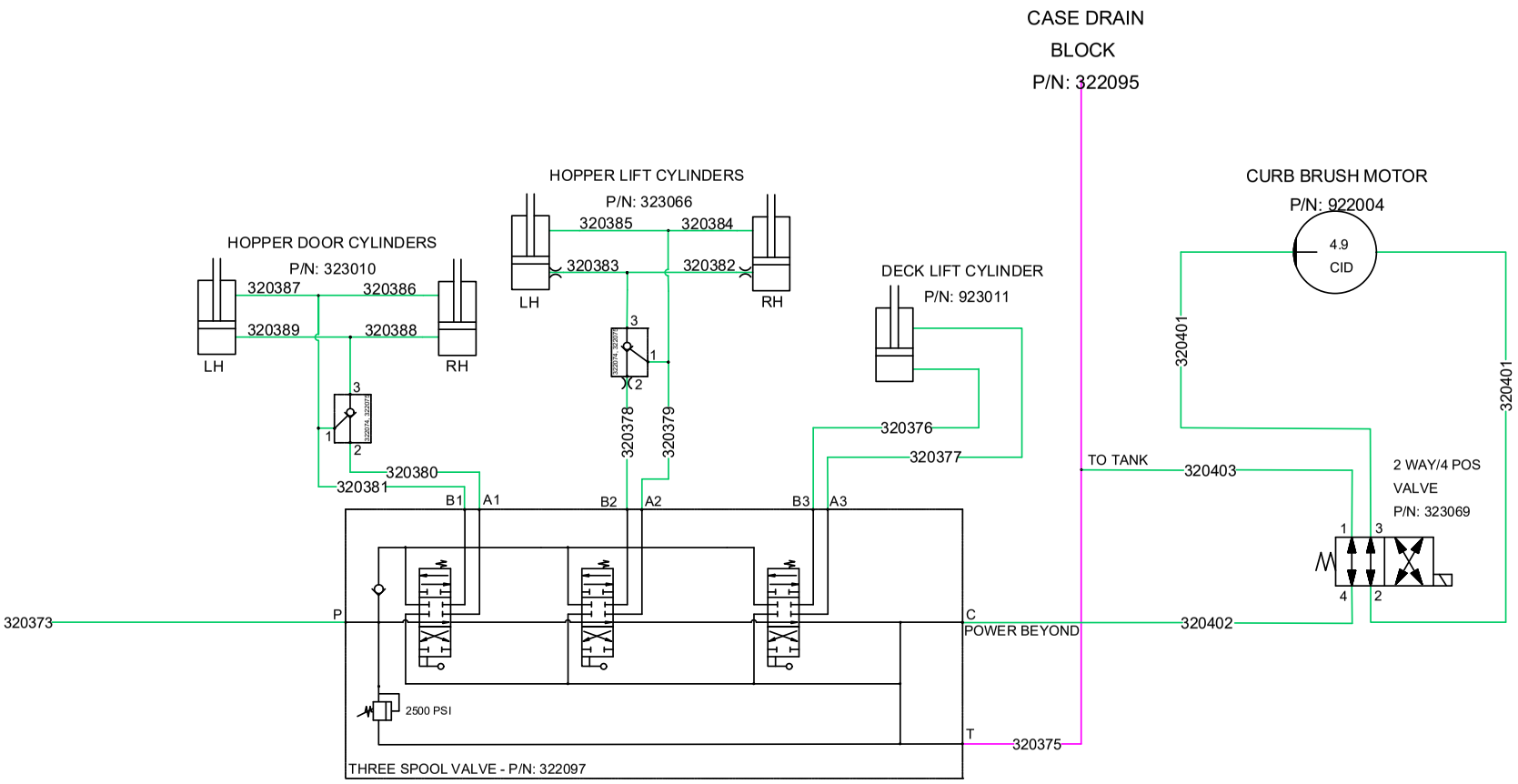

9-17-2021

VALVE ASSEMBLIES

Parts List			
ITEM	QTY	PART #	DESCRIPTION
26	4	120319	ADAPTER, 6MJ-6MB
48	1	323069	VALVE ASSEMBLY, 2-WAY/4 POSITION
48.1	1	322100	BODY, 8 SIZE, 4 WAY, SAE-6
48.2	1	222052	Valve, #8 Spool, 4-Way 2-Position
48.3	1	322101	COIL, 12V ERZ

Parts List			
ITEM	QTY	PART #	DESCRIPTION
24	1	120216	ADAPTER, 6MJ-6FJX-6MJ
25	1	120239	ADAPTER, 6MJ-8MB
47	1	322099	HIGH PRESSURE CARRYOVER PLUG

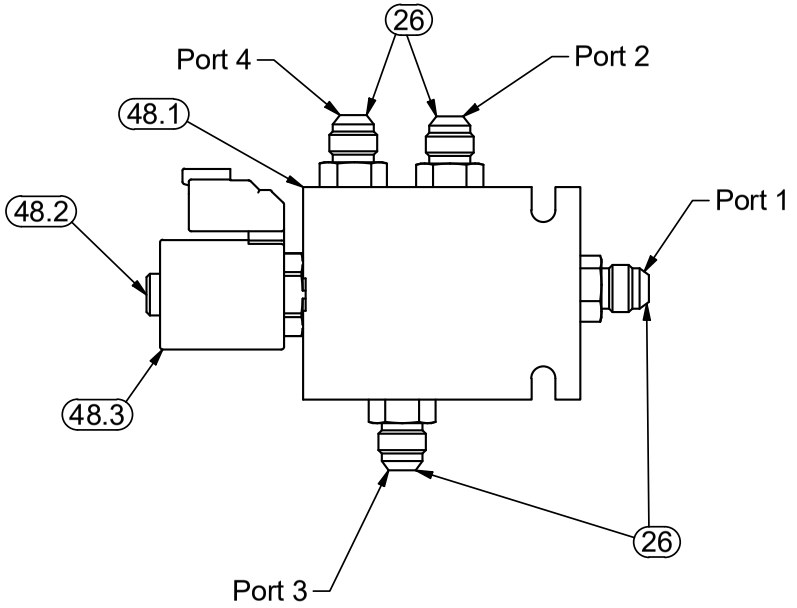

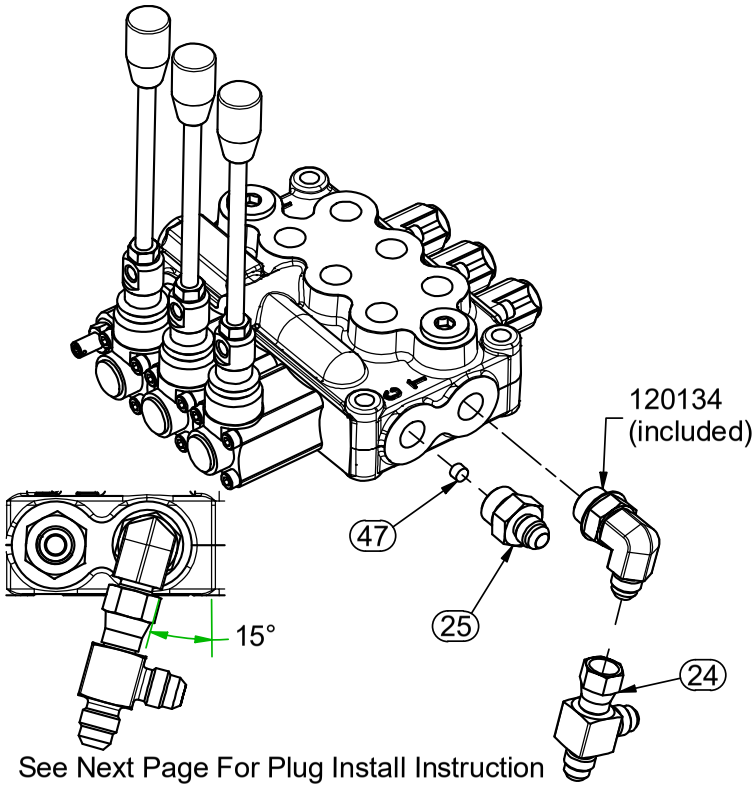

See Next Page For Plug Install Instruction

9-17-2021

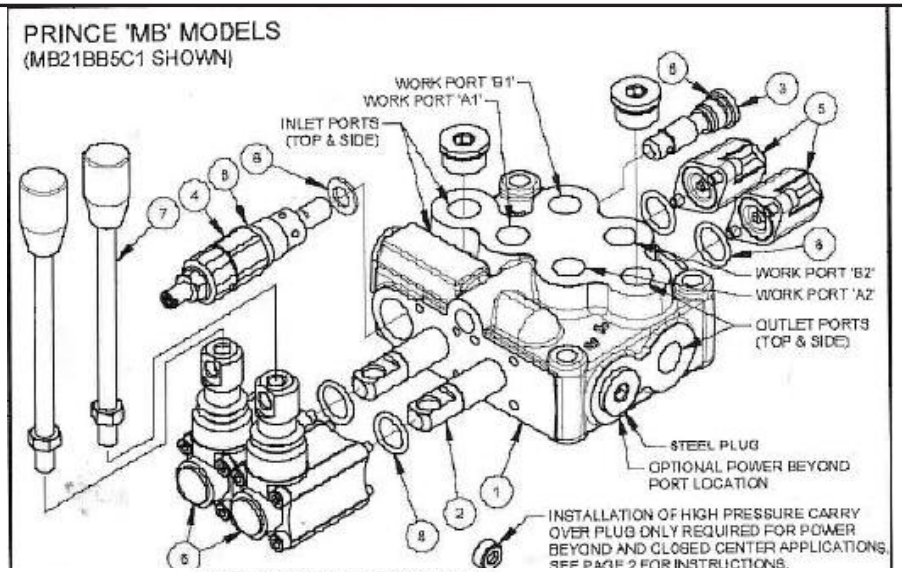
PRINCE 'MB' MODELS
(MB21BB5C1 SHOWN)
WORK PORT 'B1'
WORK PORT 'A1'
INLET PORTS
(TOP & SIDE)
WORK PORT 'B2'
WORK PORT 'A2'
OUTLET PORTS
(TOP & SIDE)
STEEL PLUG
OPTIONAL POWER BEYOND
PORT LOCATION
INSTALLATION OF HIGH PRESSURE CARRY
OVER PLUG ONLY REQUIRED FOR POWER
BEYOND AND CLOSED CENTER APPLICATIONS.

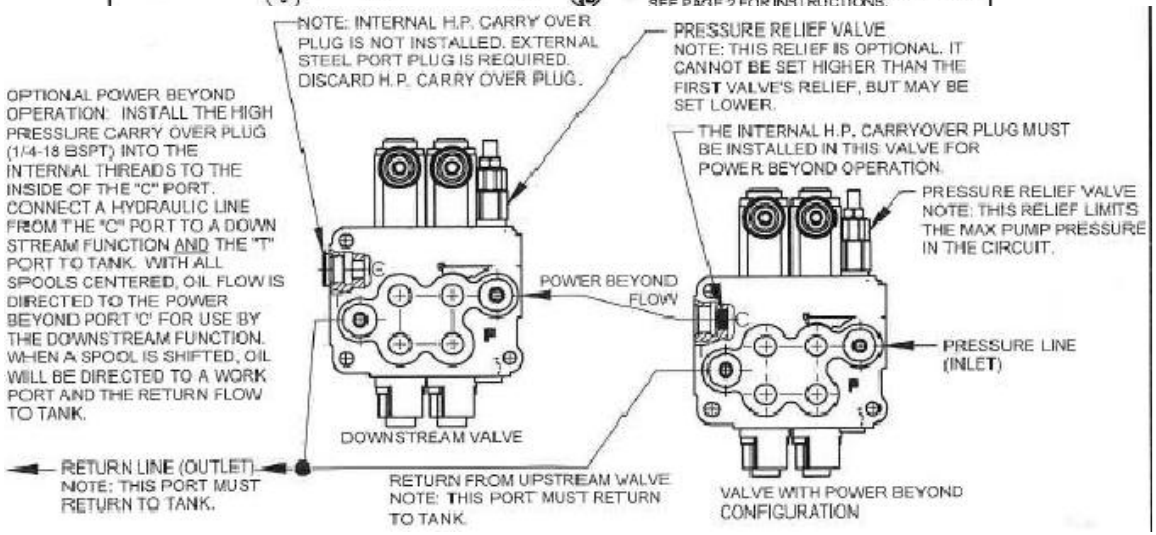
NOTE: INTERNAL H.P. CARRY OVER
PLUG IS NOT INSTALLED. EXTERNAL
STEEL PORT PLUG IS REQUIRED.
DISCARD H.P. CARRY OVER PLUG.
PRESSURE RELIEF VALVE
NOTE: THIS RELIEF IS OPTIONAL. IT
CANNOT BE SET HIGHER THAN THE
FIRST VALVE'S RELIEF, BUT MAY BE
SET LOWER.
OPTIONAL POWER BEYOND
OPERATION: INSTALL THE HIGH
PRESSURE CARRY OVER PLUG
(1/4-18 BSPT) INTO THE
INTERNAL THREADS TO THE
INSIDE OF THE "C" PORT.
CONNECT A HYDRAULIC LINE
FROM THE "C" PORT TO A DOWN
STREAM FUNCTION AND THE "T"
PORT TO TANK. WITH ALL
SPOOLS CENTERED, OIL FLOW IS
DIRECTED TO THE POWER
BEYOND PORT 'C' FOR USE BY
THE DOWNSTREAM FUNCTION.
WHEN A SPOOL IS SHIFTED, OIL
WILL BE DIRECTED TO A WORK
PORT AND THE RETURN FLOW
TO TANK.
THE INTERNAL H.P. CARRYOVER PLUG MUST
BE INSTALLED IN THIS VALVE FOR
POWER BEYOND OPERATION.
PRESSURE RELIEF VALVE
NOTE: THIS RELIEF LIMITS
THE MAX PUMP PRESSURE
IN THE CIRCUIT.
POWER BEYOND
FLOW
PRESSURE LINE
(INLET)
DOWNSTREAM VALVE
RETURN LINE (OUTLET)
NOTE: THIS PORT MUST
RETURN TO TANK.
RETURN FROM UPSTREAM VALVE
NOTE: THIS PORT MUST RETURN
TO TANK.
VALVE WITH POWER BEYOND
CONFIGURATION

300092	REV: NC

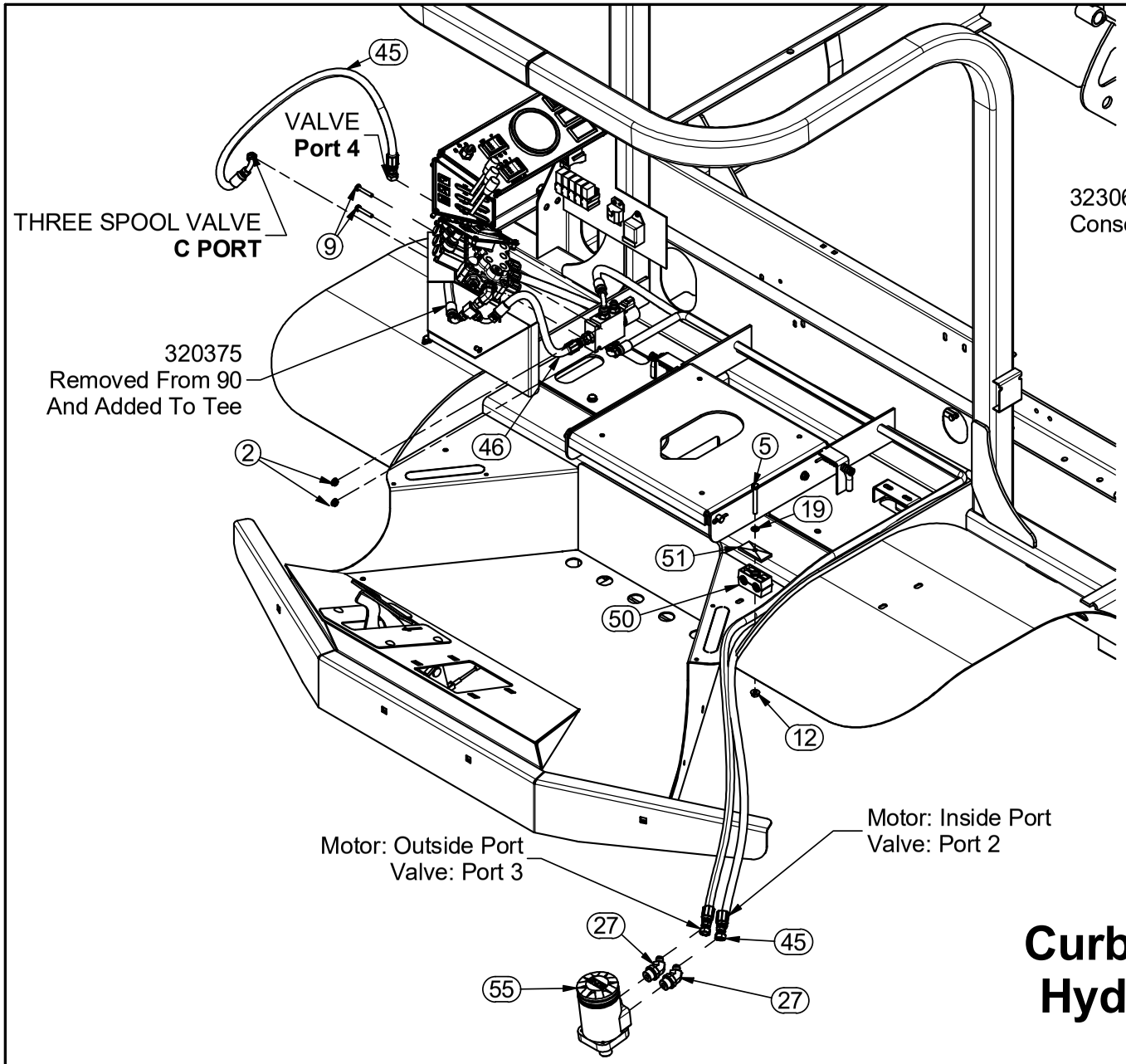

323069 (**48**) mounts inside console.
Console Wall hidden for clarity.

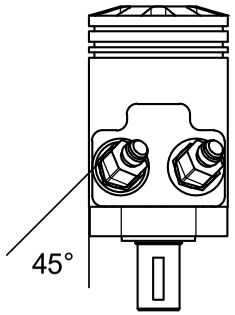

Curb Brush Hydraulics

9-17-2021

300092	REV: NC

Parts List			
ITEM	QTY	PART #	DESCRIPTION
1	1	110125	BOLT, 1/2-13 X 2.25 GR 5 ZINC PLATE
2	2	110290	NUT, 1/4-20 WIZ FLANGE
3	2	110358	Bolt, 1/4-20 X 0.625 in Carriage
4	2	110392	Bolt, 3/8-16 X 2 in Carriage
6	4	110400	BOLT, 3/8-16 X 2.0
7	4	110420	BOLT, 3/8-16 X 1.0
8	1	110434	BOLT, 1/4-20 X 0.5, WIZ FLANGE
10	2	110597	NUT, 5/8-11 HEX
11	3	110600	NUT, 5/16-18, UNITORQUE LOCK
13	1	110615	NUT, 1/2-13, UNITORQUE LOCK
14	4	110621	NUT, 3/8-16, UNITORQUE LOCK
15	1	110639	NUT, 5/8-11, UNITORQUE LOCK
16	2	110658	WASHER, 1/2" FLAT STANDARD
17	2	110665	WASHER, 5/16" FLAT STANDARD
18	4	110672	WASHER, 3/8" LOCK
20	6	110676	WASHER, 3/8" FLAT STANDARD
21	1	110895	Bolt, 5/8-11 X 3 in Carriage
22	1	111189	Bolt, 5/8-11 X 7.5, HHCS Gr 5 Zinc
23	1	111199	BOLT, 3/8 X .625 SHOULDER SHCS
28	1	211747	FRICTION WASHER 1.5"
29	2	302063	KNOB, ALUMINUM 3/8-16
30	1	302064	BRUSH, 24" x 6" x 40 DEG
31	1	302160	DECAL, CURB BRUSH
32	1	312022	CLIP, HAIRPIN 3/32 x 1.625
33	1	312039	GAS SPRING, 4" STROKE, 120LBS
34	1	312041	CLEVIS PIN, 3/8 X 1.5, ZINC
35	1	315402	WLDMNT, CURB BRUSH HANDLE LEFT, SWPR
36	1	315403	WELDMENT, CURB BRUSH ARM, SWPR
37	1	315405	WELDMENT, CURB BRUSH BASE LEFT, SWPR
38	1	315406	WELDMENT, CURB BRUSH MOUNT, SWPR
39	1	315407	WELDMENT, BRUSH ADAPTER, SWPR
40	1	317258	WASHER, 2.0 X .344 X .12
41	1	317261	TENSIONER, GEAR MOUNT, BUSHING
42	1	317398	LINK, CURB BRUSH LIFT
43	1	317411	PLATE, CURB BRUSH NOTCH
49	1	332070	HARNESS, CURB BRUSH
52	1	832005	SWITCH, PADDLE, CARLING (29253)
53	1	832024	MOUNT, SWITCH (VMS)
54	1	910044	COVER, VINYL .25 X 1.5 X 4 GRIP
55	1	922004	MOTOR, EATON 101-1009

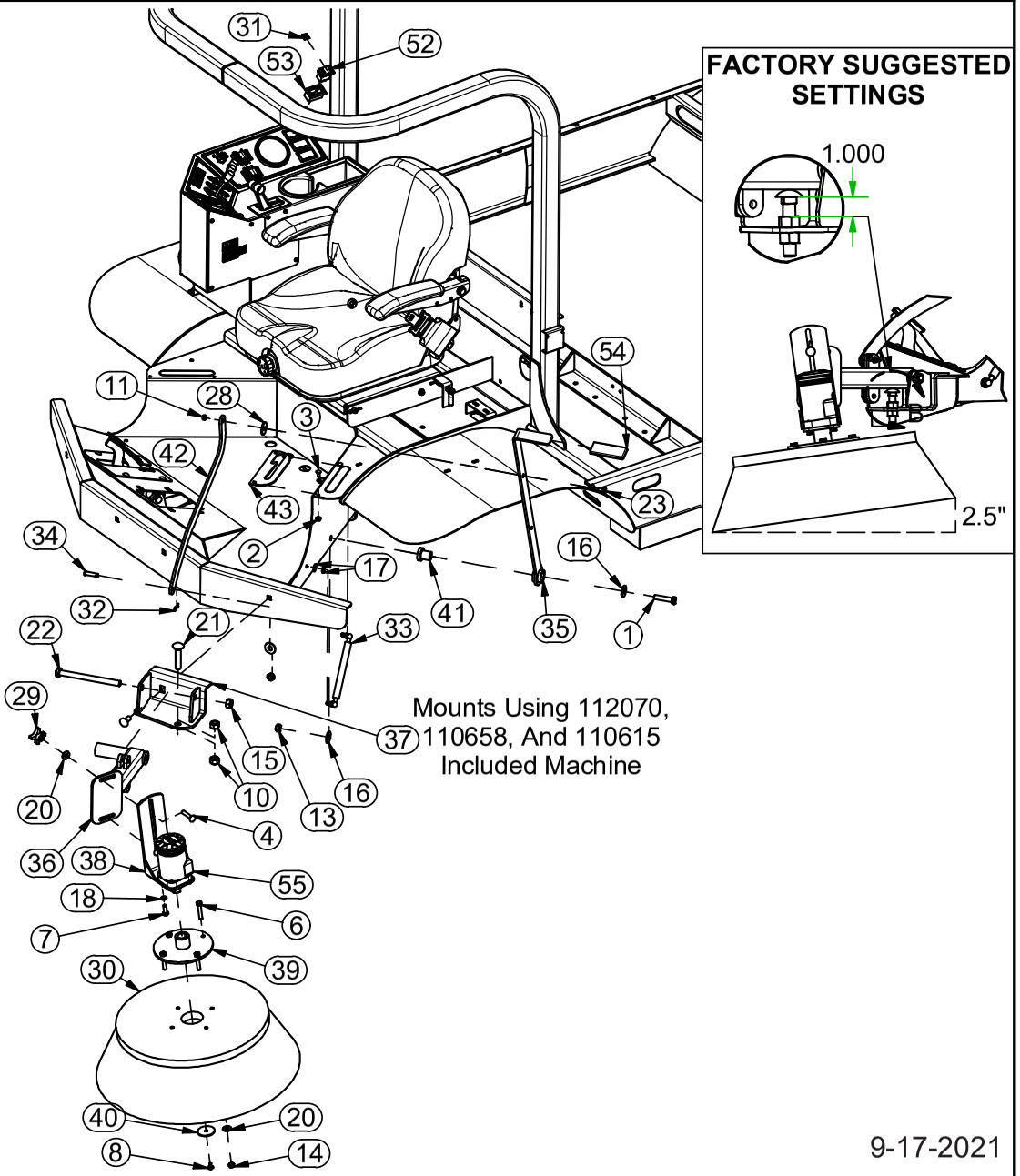

9-17-2021

To Install Wiring Harness (332070):
Disconnect Harness 332064 & 332063 At The 6 Cavity Deutch Connector. This Plug Is Located Inside Operator's Console. It Is The Only 6 Cavity Deutch Connector In The Console. Connect Harness 332064 and 332063 To The Harness Included With This Kit (332070)

Connect 2 Cavity Deutsch, Black Wire Only, To One Of The 3 Available Accessory Plugs (Harness 332064). These 2 Cavity Plugs Should Be Located Near The Fuse Block Inside The Console.

Connect Packard 10 Cavity Switch To 832005 (P# 52 Shown To The Left).

Connect 2 Cavity Deutsch, Blu/Org & Blk, To 323069 Valve.

wiring harness below for reference

SWEEPER CURB BRUSH WIRING SCHEMATIC

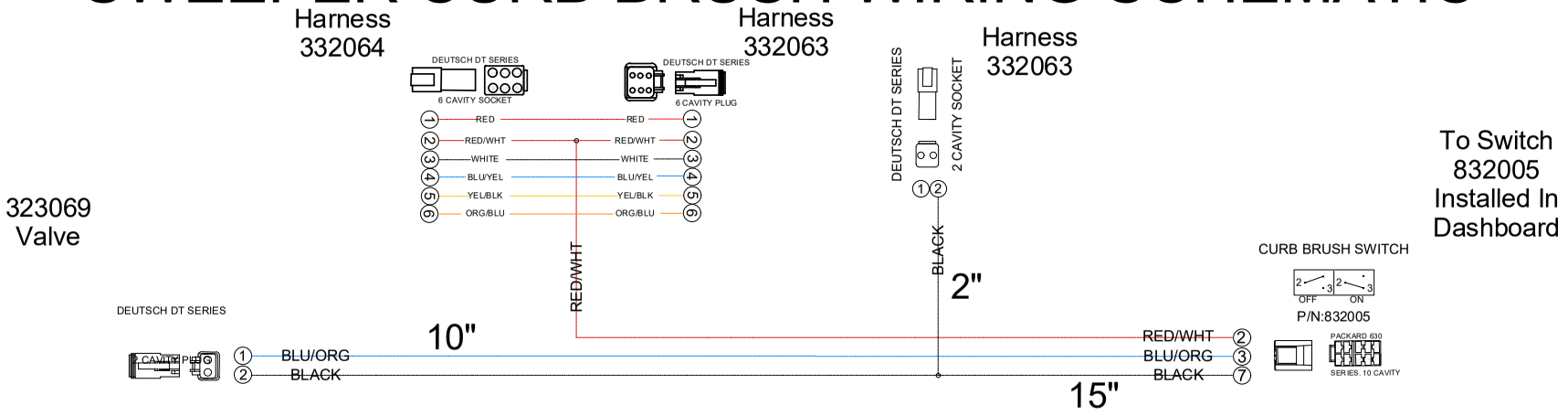

9-17-2021

300092	REV: NC

MODIFICATION INSTRUCTIONS (HYDRAULICS INSTALL)

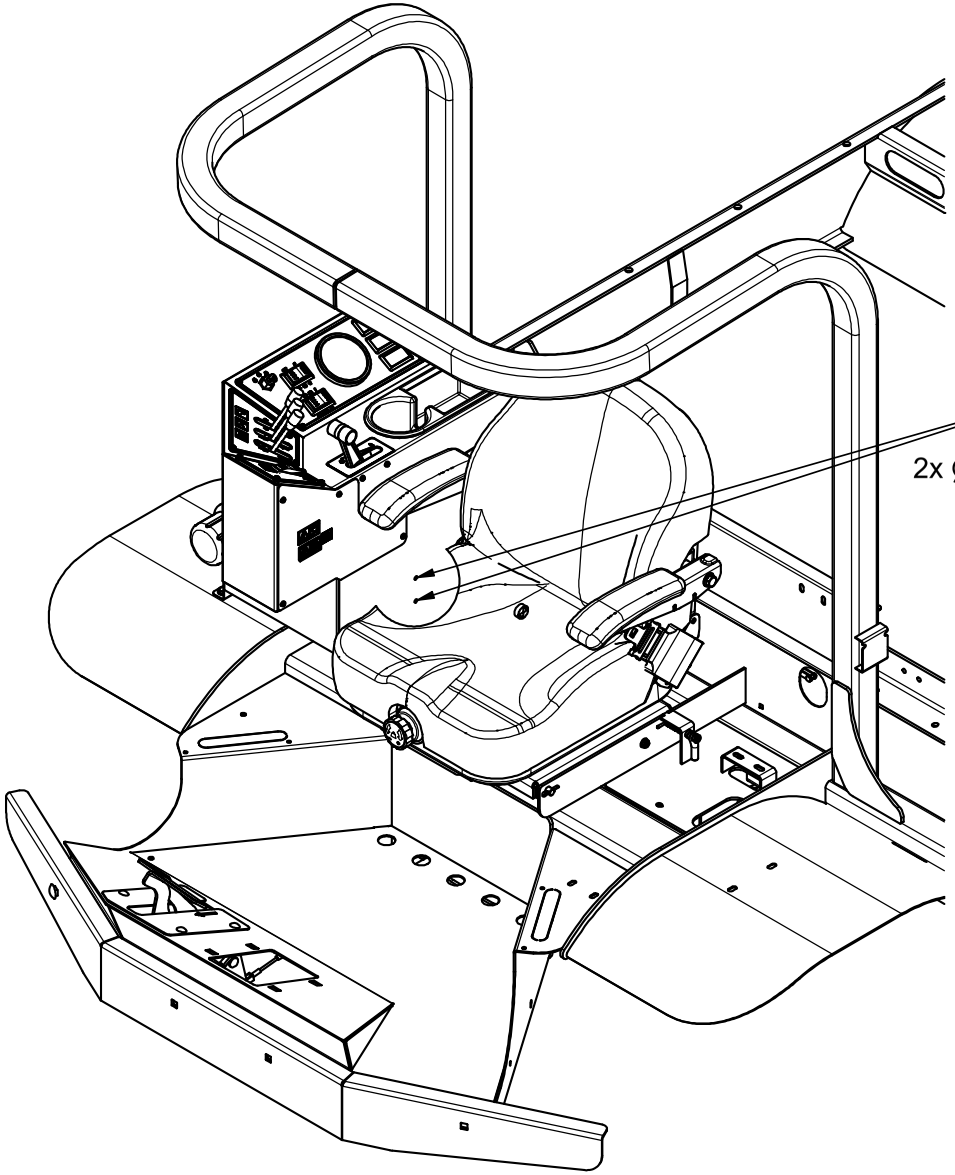

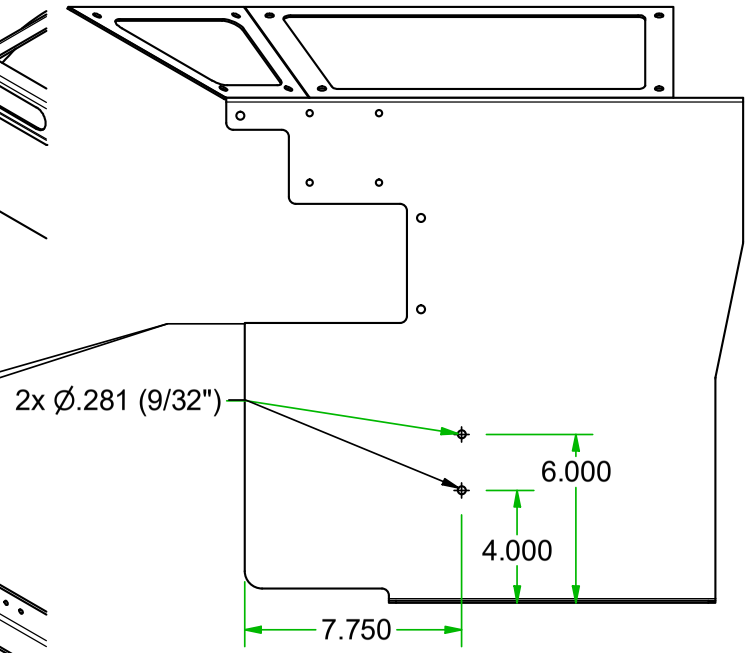

For Right Hand Curb Brush, The
Following Cutouts Will Need To Be Made:

Holes For Curb Brush Valve (2X)

9-17-2021

MODIFICATION INSTRUCTIONS (MECHANICAL INSTALL)

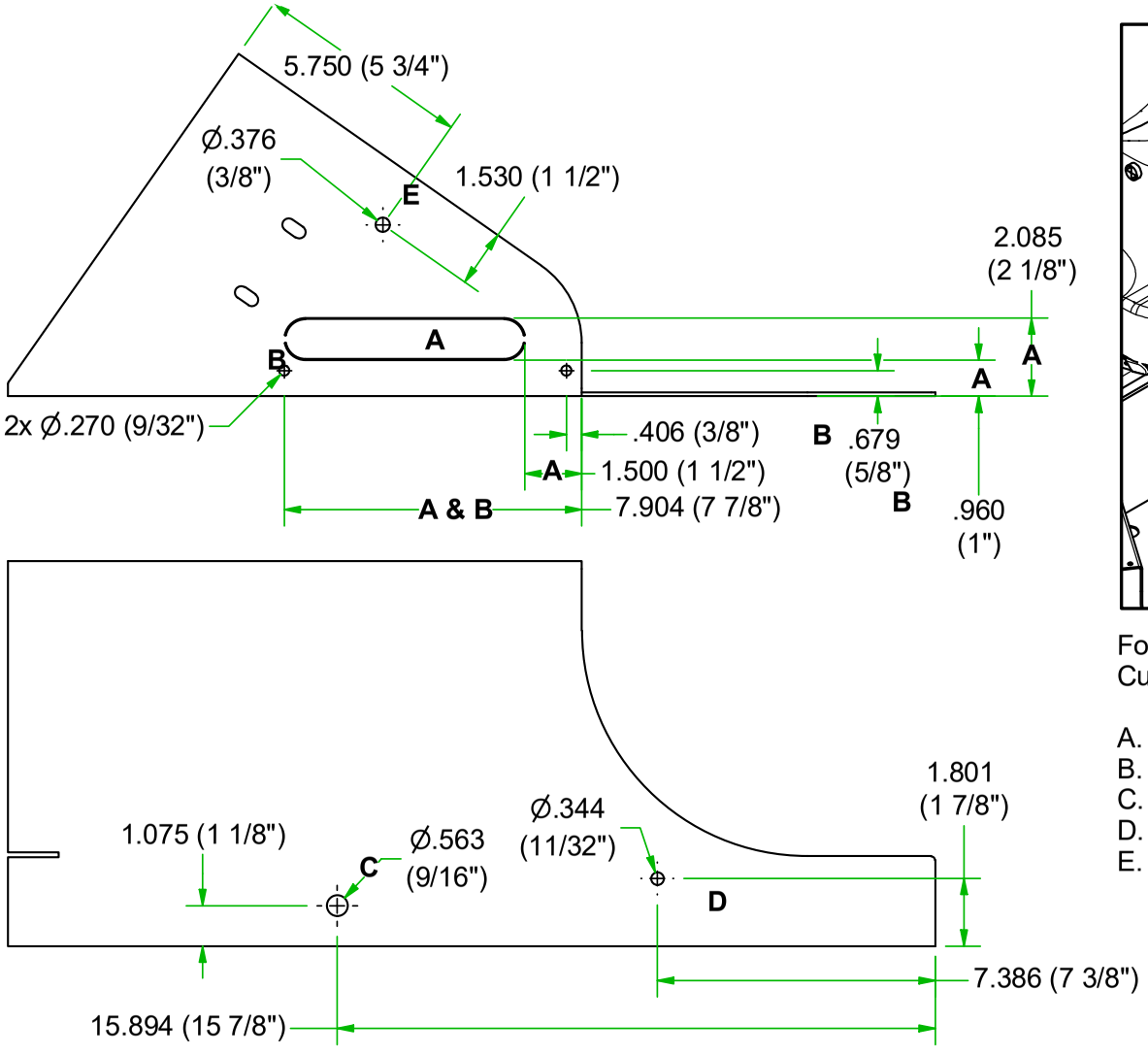

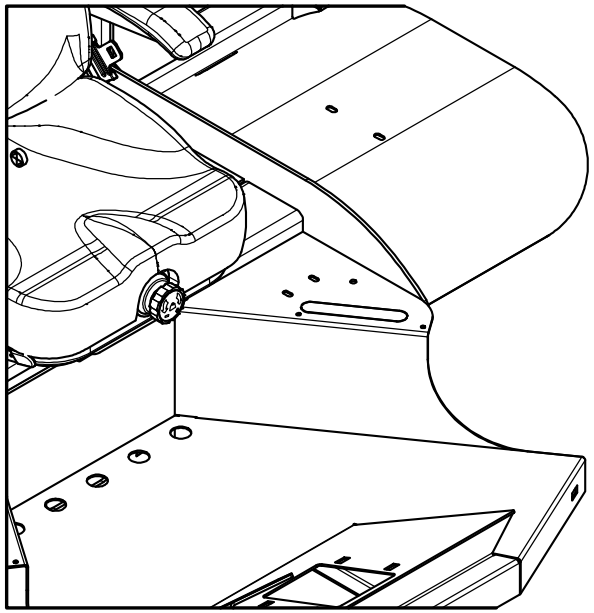

For Left Hand Curb Brush, The Following Cutouts Will Need To Be Made.

A. Cutout For Handle Mount (1X)
B. Holes For Curb Brush Plate Mount (2X)
C. Pivot Hole For Curb Brush Handle (1X)
D. Gas Spring Mount Hole (1X)
E. Hose Clamp Hole Mount

9-17-2021

300094	REV: NC

HAWK DUAL CURB BRUSH INSTALL

Parts List			
ITEM	QTY	PART #	DESCRIPTION
1	4	110788	BOLT, 10-24 X .375 STAINLESS, PHILLIPS
2	2	110844	BOLT, 1/4-20 X 3
3	1	120219	ADAPTER, 6MJ-6MB 45
4	1	317423	SHIELD, DUAL CB VALVE
5	1	320404	HOSE ASSY, CB DUAL INLET
6	1	332071	HARNESS, CURB BRUSH DUAL
7	1	802035	BOX, PLASTIC, MANUAL OVERRIDE
8	1	810747	SWITCH SHIM
9	1	810818	MOUNT, ARM REST SWITCH

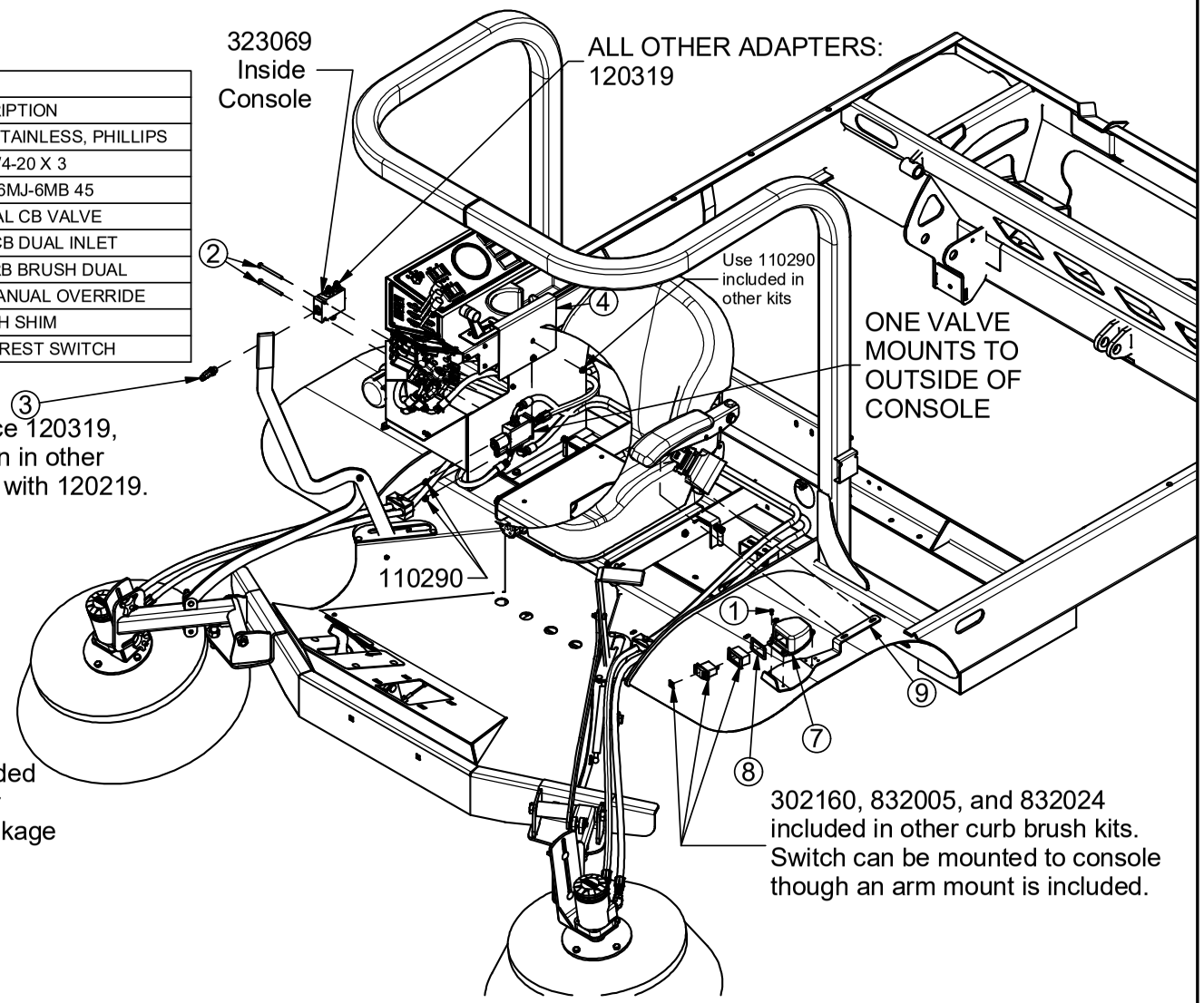

9-17-2021

HARPER TURF EQUIPMENT

SWEEPER DUAL CURB BRUSH WIRING SCHEMATIC

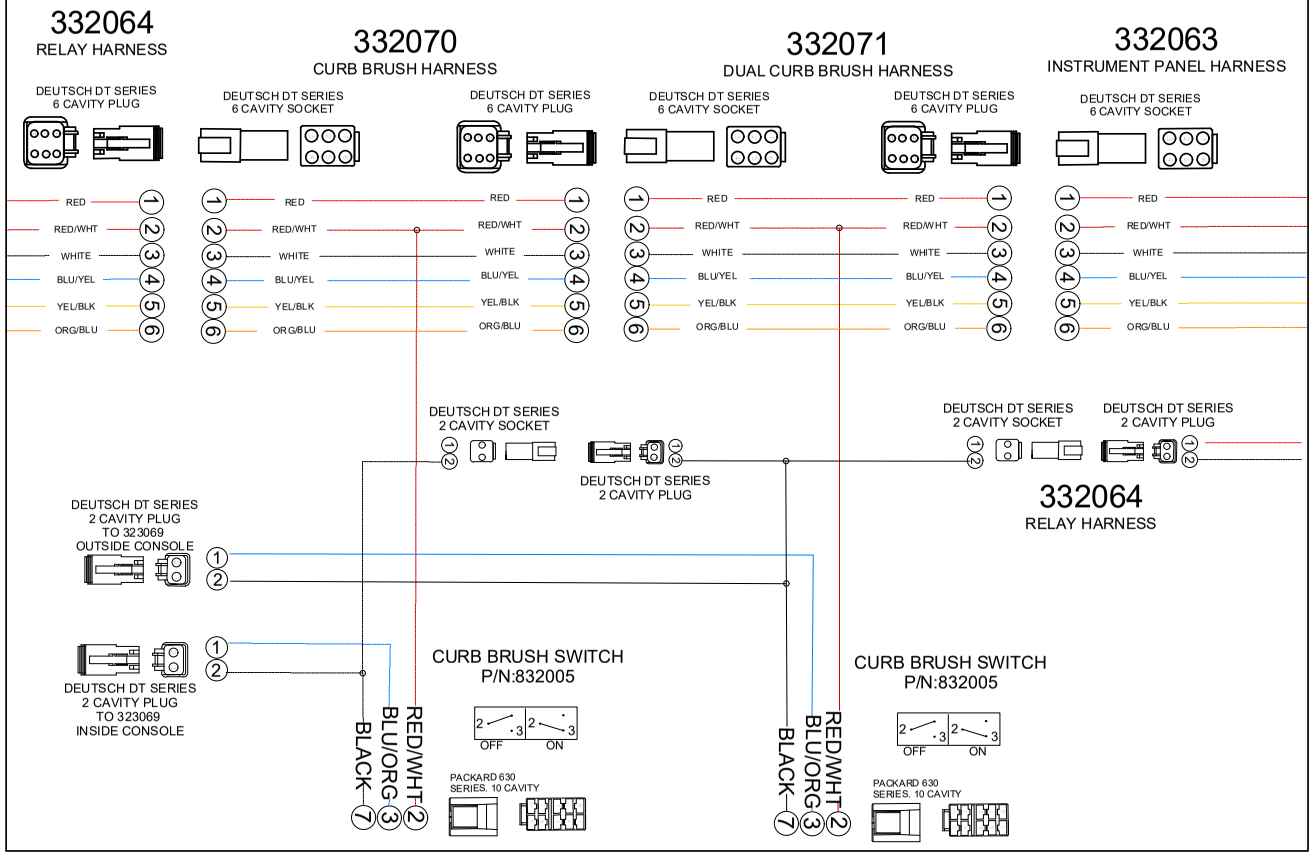

9-17-2021

300094	REV: NC

CURB BRUSH PLUMBING (DUAL)

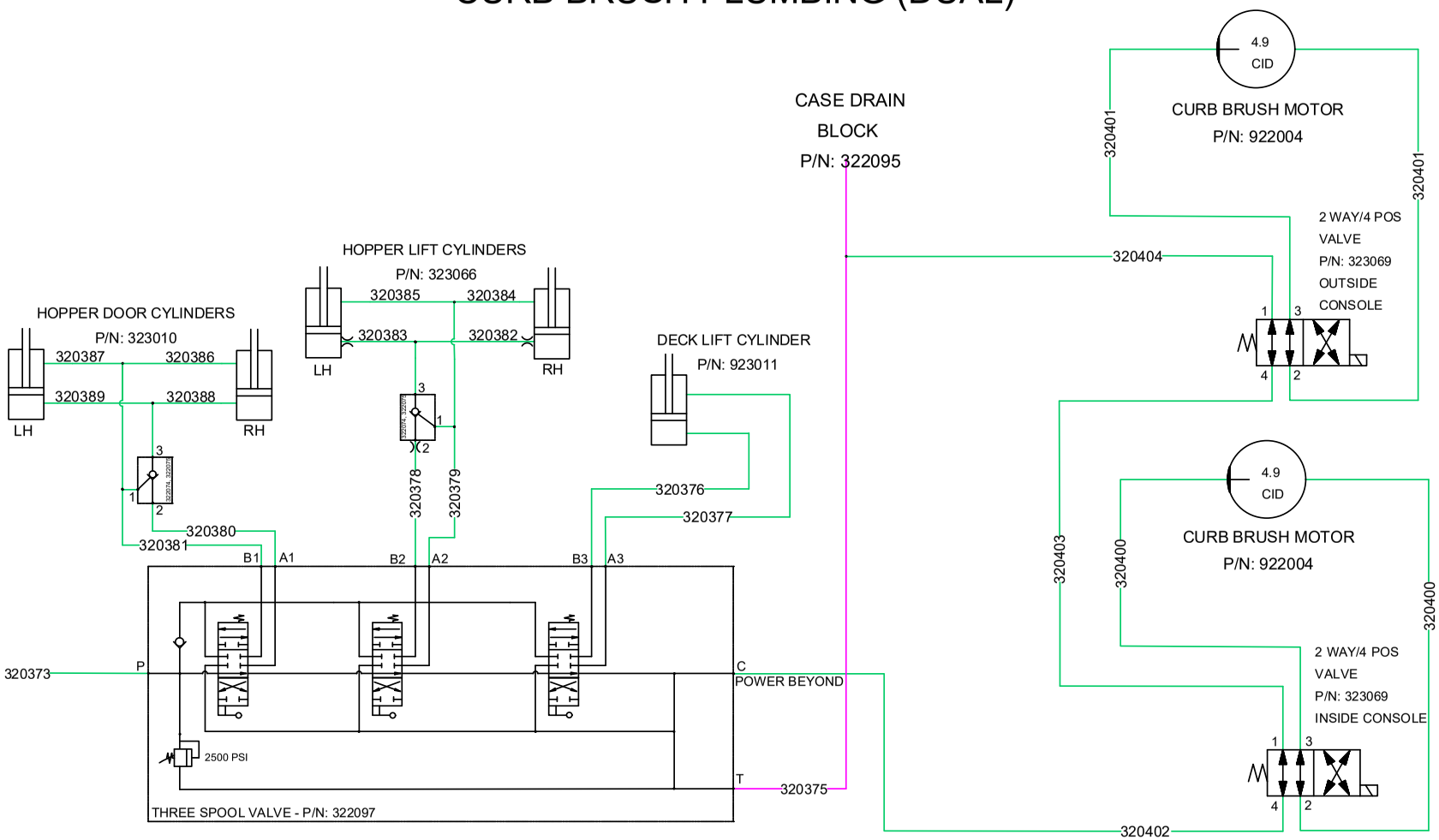

9-17-2021

300094	REV: NC

See Page 5. For Fitting Orientation

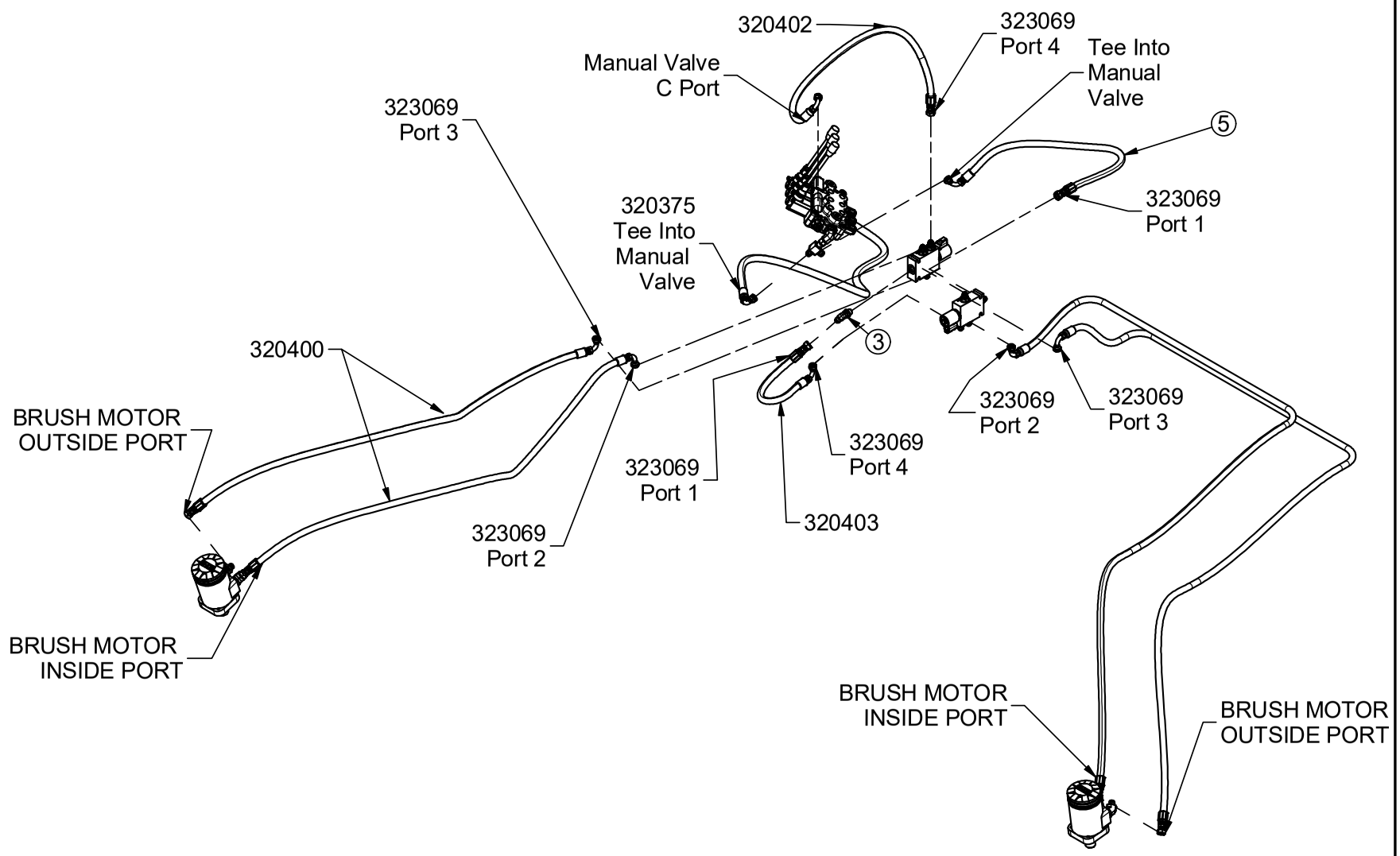

9-17-2021

300094	REV: NC

Inisde Valve Orientation

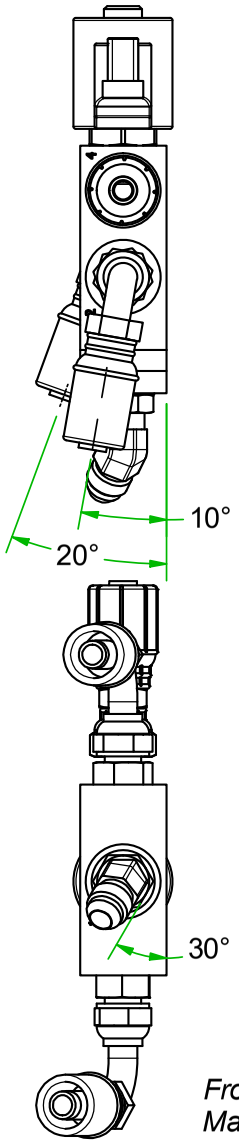

Outside Valve Orientation

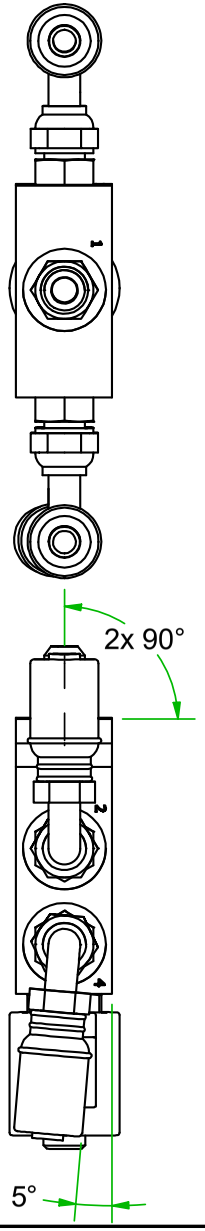

Front Of Machine

I

V

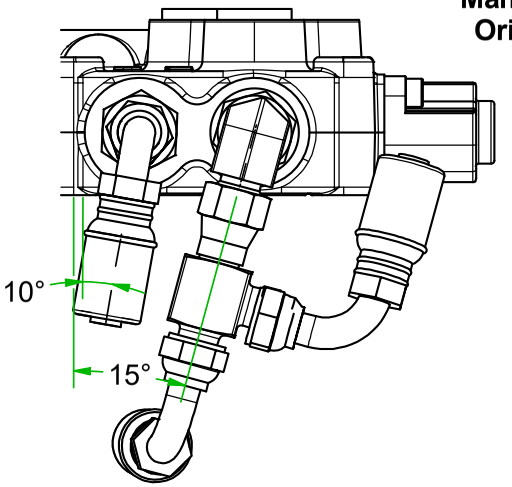

Manual Valve Orientation

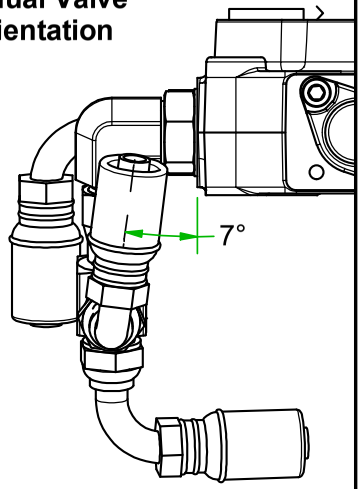

Motor Orientation

(Right Shown, Left)

(Mirrors shown below)

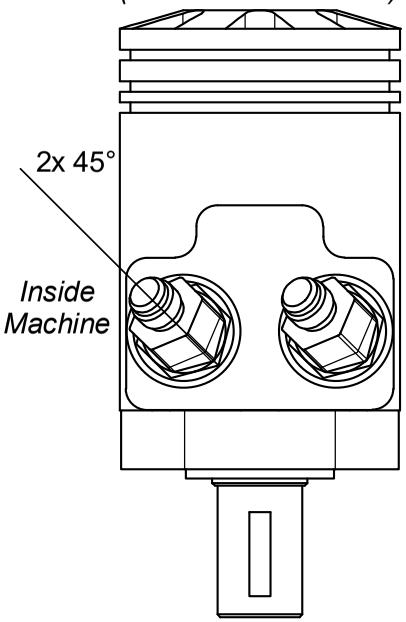

9-17-2021

HARPER TURF EQUIPMENT

NOTES

Harper Industries, Inc.
151 E. Highway 160
Harper, KS 67058

Telephone: 620-896-7381
Toll-Free: 800-835-1042
Fax: 620-896-7129

Website: www.harperindustries.com

E-mail: info@harperindustries.com