ATM 72 LC

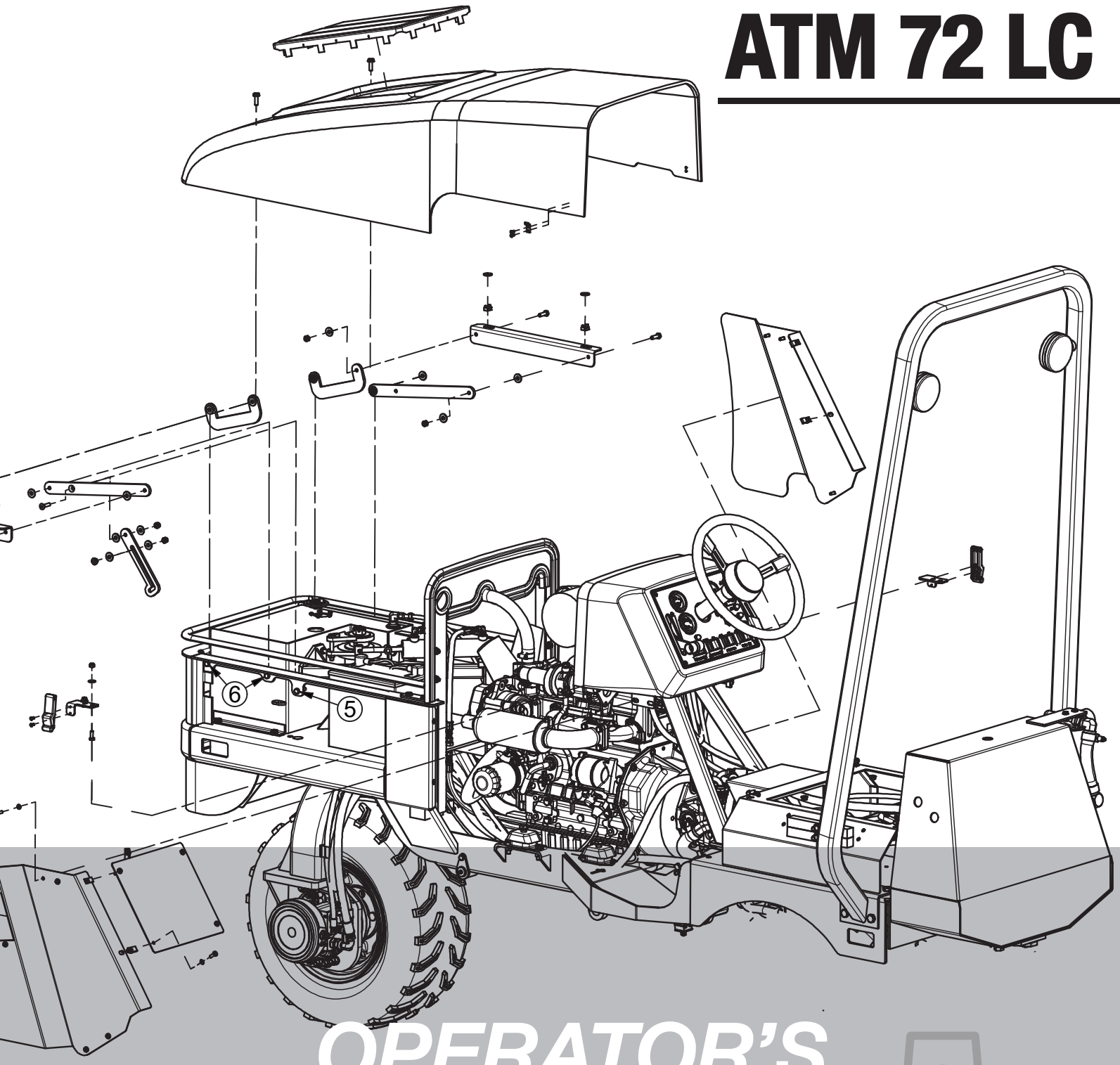

OPERATOR'S MANUAL

All Terrain Mower®
72 LC

3-2020

HARPER INDUSTRIES INC

Thank you for purchasing a Harper ATM 72.

TO THE OWNER OR OPERATOR:

Please take time to read this manual carefully before operating the ATM 72. Each operator should be familiar with all safety precautions along with the operating and service procedures. Knowledge and familiarity will make a difference in how the machine performs.

As with all Harper products, the ATM 72 was developed through tough design and testing procedures to produce a sturdy, dependable machine. This manual gives assembly and operating information. Read and understand all instructional materials included with the unit and its components before operating or maintaining the equipment.

An All-Terrain Mower can present hazards to an operator who follows unsafe procedures in either the operation or maintenance of the unit. Therefore, **SAFETY WARNINGS** are present at certain locations in the text.

SYMBOL: ⚠ **SAFETY WARNING!** ⚠

MEANING: Failure to understand and obey this warning may result in injury to you or others. Whenever this symbol is used, please pay very close attention to the information presented, and make sure you fully understand. If you do not, contact your dealer or Harper Industries for clarification.

⚠ **SAFETY WARNING!** ⚠

All shields and guards must be in place for proper and safe operation of this equipment. Where they are shown removed in this manual, it is for purposes of illustration and instruction only. Do not operate this equipment unless all shields and guards are in place.

WARNING: Breathing diesel engine exhaust exposes you to chemicals known to the State of California to cause cancer and birth defects or other reproductive harm.

- Always start and operate the engine in a well-ventilated area.
- If in an enclosed area, vent the exhaust to the outside.
- Do not modify or tamper with the exhaust system.
- Do not idle the engine except as necessary.

For more information go to www.P65warnings.ca.gov/diesel

© 2019 Harper Industries, Inc.
The Harper and DewEze names and the ATM logo are registered trademarks of Harper Industries, Inc. All other brand and product names are trademarks or registered trademarks of their respective companies.

LIMITED WARRANTY

Harper Industries, Inc. (HII) warrants to each purchaser of a new Harper ATM from an authorized dealer or representative, that such equipment is free of manufacturer's defects in workmanship and materials which appear while in normal service for a period of ONE YEAR commencing with delivery to the original user.

The obligation of HII under this warranty is expressly limited, at our option, to replacement or repair at a service facility designated by Harper Industries or at the manufacturing plant in Harper, KS. A part will be replaced after inspection discloses it to have been defective. This warranty does not apply to defects caused by damage or unreasonable use (including failure to provide reasonable and necessary maintenance, or by performing functions without genuine Harper ATM accessories) while in the possession of the consumer.

Warranty is limited to parts, labor and ground freight delivery of replacement parts. HII shall not be liable for the consequential damages of any kind, including but not limited to consequential labor costs or transportation charges in connection with replacement or repair of defective parts.

This warranty does not apply to parts subjected to misuse, abuse, alteration, improper or inadequate maintenance, or normal wear (including blades, filters, and battery).

Engines are not covered under this warranty. Refer to manufacturer's warranty for specific warranty information. Harper Industries, its agents or representatives, make or imply no other warranties.

Harper Industries makes no warranty with respect to trade accessories. They are subject to the warranties of their respective manufacturers.

ANY IMPLIED OR STATUTORY WARRANTIES, INCLUDING ANY WARRANTY OR MERCHANTABILITY OR FITNESS FOR A PARTICULAR PURPOSE, ARE EXPRESSLY LIMITED TO THE DURATION OF THIS WRITTEN WARRANTY. HII makes no other express warranty, nor is anyone authorized to make any on behalf of HII.

For further information please contact your nearest Harper ATM dealer.

RECORDS

Date of Purchase _____ / _____ / _____

Dealer's Name _____

Dealer's Phone _____

Serial Number Machine _____

Serial Number Engine _____

Table of Contents

OPERATOR SECTION
To the Owner or Operator..... 1
Warranty Statement..... 2
Table of Contents..... 3
Introduction..... 4
Specifications..... 5
Control Identification..... 6
Throttle..... 6
Mower Switch..... 6
Deck Lift..... 6
Lights..... 6
Ignition..... 6
Park Brake..... 6
Manual Override..... 6
Deck Wing Raise/Lower..... 6
Manual Leveling..... 6
Inclinometer Switch..... 6

Safety Guidelines
Equipment & Controls..... 7
Safety Decals..... 7
Diesel Fuel..... 7
Guards & Shields..... 7
Battery..... 8
Hydraulics..... 8
Safety Interlocks/Wiring Logic..... 8
Before Operation..... 8
During Operation..... 9

Maintenance
Hydraulic System..... 9
Grease Zerk Locations..... 10
Air Cleaner..... 10
Cooling System..... 11
Engine Oil..... 11
Fuel Filter..... 12
Relay Panel..... 12
Deck Service Mode..... 12

Tow Procedure/Transporting
Moving the machine w/o starting..... 13
Park Brake Release..... 13
Opening the Bypass Valve..... 13
Tie Down Locations..... 14

Adjustments
Seat Adjustment..... 14
Deck Lift Adjustment..... 15
Cutting Height..... 15
Leveling..... 15

Standard Torque Chart..... 16
Service Parts..... 16
Service Schedule..... 17
Operating Guide..... 19

Introduction

The objective of Harper Industries in designing the **ATM 72 LC** was to create a mowing machine that could function safely and comfortably on slopes and inclines. The result is an All-Terrain Mower that will automatically adjust itself to keep the operator in a vertical position on all slopes up to 34 degrees.

Driving with an automatic leveling device will be a new and different experience. After several minutes of driving, the smooth control and sturdy feel will become comfortable to you. The security of always sitting upright and the feel of powerful, positive traction will give you confidence and comfort in most mowing situations.

However, we urge **EXTREME CAUTION** or else your confidence in these features get you into trouble.

REMEMBER: The features of the ATM 72 cannot replace good common sense.

Specifications

Power	Diesel - Kubota V1505-E4B 24.8 HP @ 2300 RPM
Main Frame	Welded and formed steel frame
Decks	• 2 - 36” decks (72” total cutting width) • Independently free floating, with rear discharge • Constructed of reinforced 10 gauge steel
Cutting Height	3 - 6” adjustable cutting height
Hydraulics	• Direct hydraulic blade drive (no belts or gear boxes) • Poclain hydrostat - PM10 variable displacement axial piston pump • Poclain high efficiency axial piston wheel motors with integrated parking brake. • Hydraulic filter - 3 micron with indicator • Hydraulic oil cooler
Speed	• 0-7 MPH ground speed • Foot operated speed control - self-centering to neutral
Options	• Incline Meter Assembly - Part # 815052 • Factory Install Wheel Weight Kit - Part # 801005 • Customer Install Wheel Weight Kit - Part # 801004 • White Canopy - Part # 802039 • Red Canopy - Part # 802040
Tires	Drive Tire: 25” x 11-12 - 6 ply Stabilizer Tire: 16.5” x 6.5 x 8” foam filled Deck Caster Tire: 11” x 4.00 x 5” foam filled
Steering	Power steering with automotive type steering wheel
Seat	Adjustable ride suspension, arm rests, and retractable seat belt
Electrical	12 volt, 40 Amp Electrical System
Dimensions	Length – 107 in., Height – 90 in., Width – 74.5 in.
Weight	2480 lbs.
Liquid Capacities	Fuel – 10 Gallon; Hydraulic Fluid – 11.5 Gallon
Safety & Hydraulic Oil	• Includes Certified ROPS with hazard lights (meets ANSI/OPEI B71.4 standards) • Seat belt • *Crown AW46*; ISO 46 Hydraulic Oil

NOTE: *Following publication of this manual, certain changes in standard equipment and/or options may have occurred which would not be included in these pages. Your Harper dealer is the best source for up-to-date information.*

Control Identification

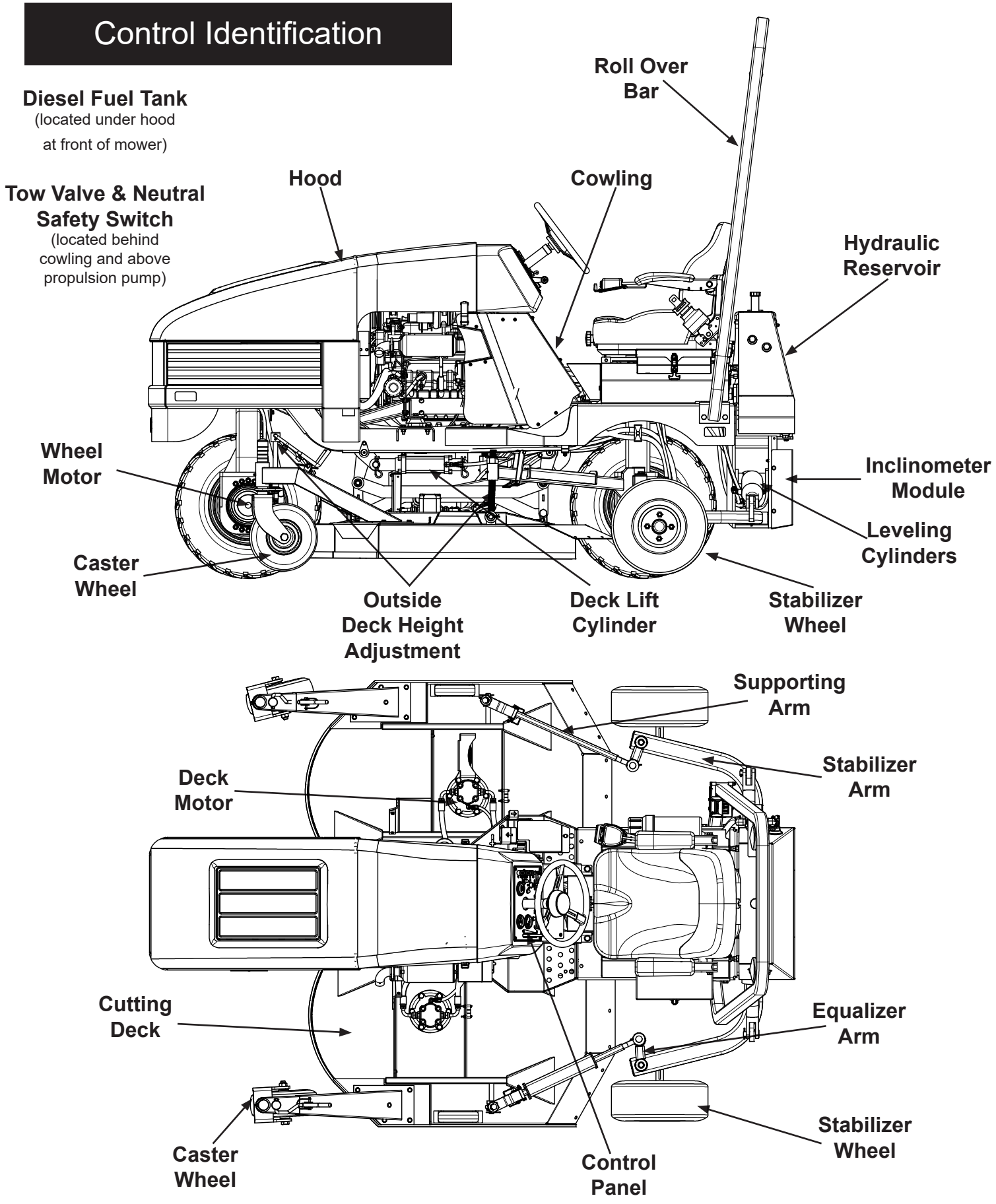

Throttle – adjust engine speed with throttle. Start at low throttle, allow engine to warm up, then operate unit at full throttle.

Mower Switch – turns the deck blades on and off allowing user to cut the grass.

Deck Lift Switch – raises and lowers the mower deck.

Lights Switch – turns on headlights.

Ignition – turn the key to the left until the pre-heat light turns off. Then, turn key to right to start unit. Remove key when unit is not in use. Never leave unit unattended with key in ignition.

Park Brake – set park brake when unit is not in use or is parked on an incline. Make sure park brake is disengaged before operation.

Momentary Reset Switch– resets the auto level function after the machine has been locked out. Once the machine is level, the reset button can be pushed to turn on the auto level function.

Mower Deck Light – is on when the mower blades are engaged.

Engine Pre-Heat Light – turns on when the key is in the pre-heat position.

Engine Temp Light – turns on when the engine temp exceeds 215° F.

Hydraulic Level Light – turns on when the hydraulic oil is low.

Leveling Lockout Light – turns on when the auto level funtion has been locked out.

Battery Light – is on when the charging system voltage is low.

Engine Oil Light – turns on when the oil pressure drops below 7 psi.

Parking Brake Light – is on when the park brake is applied

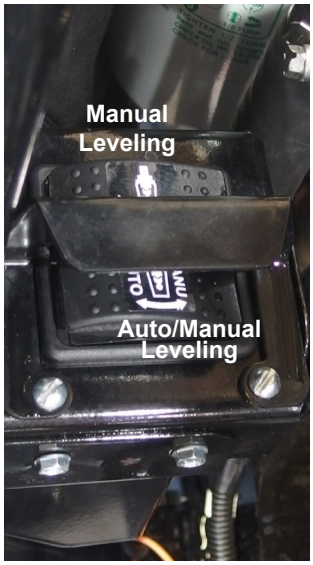

Manual Leveling Switch – one is located on the arm rest and the other on the ROPS. Both of these switches perform the same function. One is intended to be used while in the operator's seat and the other for when standing behind the machine. They are used to manually tilt the machine left or right.

Auto/Manual Leveling Switch – determines if the machine is leveled automatically using the signal from the inclinometer module or leveled only using the manual leveling switch.

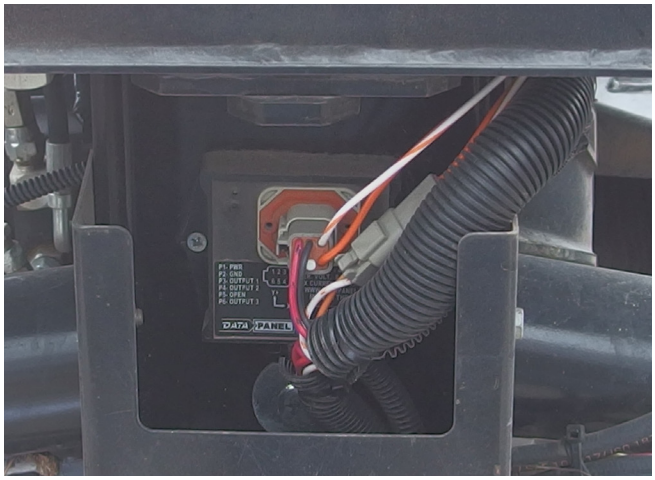

Inclinometer Module – senses if the machine is off center/vertical**.** The machine can lean to either side up to 34° before reaching its limit.

- The inclinometer module includes a dual axis (XY) accelerometer. It measures the force caused by movement of the sensor (acceleration). Gravity puts a force on the sensing elements that can be measured. The sensor is an analog device with a voltage for X and a voltage for Y. The module uses the voltage outputs from the sensor to determine the angle of the machine.
- When the inclinometer module measures an angle 4 degrees or greater from center, it sends a +12 V signal to the hydraulic valve to operate the appropriate leveling cylinder to return the machine to an upright position.

⚠ SAFETY WARNING! ⚠

Do not leave ATM 72LC unattended, or attempt any service or inspection unless the machine has come to a complete stop and the engine has been shut off.

Safety Guidelines

Equipment & Controls

- **Read and understand this manual.**
- Altering this equipment in any manner which adversely affects its operation, performance, durability, or use will void the warranty and may cause hazardous conditions.
- Know the location and function of all controls and how to stop this equipment quickly in an emergency before you operate the equipment.
- Keep all nuts, bolts and screws tight to help ensure safe operation of this equipment.
- Use genuine factory parts or parts with equivalent characteristics, including type, strength and material. Failure to do so may result in product malfunction and possible injury to the operator and/or others.
- If hardware is not secure, or if some of the hardware is over-tightened, equipment failure may result, posing possible safety hazards.
- To prevent possible eye injury, always wear SAFETY GLASSES while operating equipment.
- Always wear a respirator when working in dry/dusty conditions.

Safety Decals

- If safety related or instructional decals become illegible or are removed, replace them immediately. New decals may be obtained from your local Harper Dealer.
- If you replace parts that have such decals attached to them, make sure the decals are replaced with current versions, and are on the replacement parts before the machine is operated again.

Diesel Fuel

- Always use an approved container for transporting diesel fuel.
- Do not allow open flames or sparks while performing maintenance or refueling.
- Never remove fuel tank cap or add fuel when engine is running or while it is hot.
- Only use ultra low sulfur diesel.
- Never fill fuel tank indoors. Fumes are heavy and will sink to the lowest point, collect and become hazardous.
- Wipe up spilled fuel immediately.
- Do not store fuel in a room with an appliance that has a gas pilot or electrical switch that may cause sparks.
- Always store diesel outside in a safety can (a can with flame arrestor and pressure relief valve in pour spout).
- Never store the equipment with fuel in the tank inside a building where fumes may reach an open flame or spark.
- Allow the engine to cool before storing in any enclosure.
- Be certain to provide adequate ventilation if an engine must be run indoors - exhaust fumes are dangerous.

⚠ SAFETY WARNING! ⚠

Diesel fuel is extremely flammable and can be highly explosive.

Guards & Shields

- Keep all safety devices in place.
- Replace all worn, damaged, unusable, missing or lost safety shields and guards before operating the equipment.
- Keep the equipment in good operating condition.

Battery

SAFETY WARNING!

Batteries can produce explosive gas. Use extreme caution when working on the battery.

- Ventilate when charging battery or using in an enclosed space.
- DO NOT produce sparks from cable clamps, tools, or other sources; and DO NOT allow flames or smoking in the vicinity of the battery.
- Shield eyes when working near battery.

Hydraulics

SAFETY WARNING!

Escaping fluid under pressure can penetrate skin causing serious injury.

To prevent serious injury or death:

- Relieve pressure on system before repairing, adjusting or disconnecting.
- Wear proper hand and eye protection when searching for leaks.
- Use wood or cardboard instead of hands when looking for leaks.
- Keep all components in good repair.
- Do not use any type of heat (welding, soldering, cutting torch, etc) near pressurized lines.

Safety Interlocks/Wiring Logic

- To start the machine, it must be in neutral and the blades must be off.
- To turn the mower blades on, the operator must be in the seat, and the hydraulic oil temperature must be below 190° F.
- There is a 2 second time delay added to the seat switch to account for bounce.
- The park break is applied when the operator is out of the seat.
- Leveling

  1. Valves on the cylinders are open when in auto mode or when the manual switch is activated to level the machine.
  2. If the inclinometer senses that the machine is not stable or that the machine has changed angle at a quick rate, the valves on the leveling cylinders are closed to lock the machine in its current position. When this happens, the leveling lockout indicator light on the dash will be illuminated. To reset the auto level function, press the momentary reset switch on the dash.

Before Operation

- Before operating this equipment, read and understand the Owner's Manual.
- Do not allow children to operate this machine.
- Wear approved eye and ear protection and other appropriate safety equipment while operating the machine.
- Check tire pressure and fill to specifications.
- Engine settings are preset and should not be changed; any change can damage moving parts and void the warranty.
- Before starting the machine, visually inspect all nuts, bolts and other fasteners to see that they are properly secured. Nuts, bolts and other fasteners should be checked every 8 to 10 hours of operation for proper alignment and tightness.
- Replace damaged or missing safety decals.
- Use factory authorized parts or their equivalent.
- Make sure that all bearings or hinging parts are greased and or oiled properly.

During Operation

- Always keep a fire extinguisher near the mower during operation.
- Keep clothing and all body parts away from rotating parts.
- Keep the engine area clean from debris and other accumulations to lessen the possibility of fire.

Maintenance

Hydraulic System

- The hydraulic system of the ATM72LC is filled at the factory with Crown AW 46 hydraulic oil that has an ISO of 46.
- The ATM72LC has a 3 micron, beta rated hydraulic oil filter designed for long life.

The following list of hydraulic fluids are compatible and can be mixed with Crown hydraulic fluid. MIXING OTHER OILS THAT ARE NOT INCLUDED ON THIS LIST COULD CAUSE GELLING AND DAMAGE TO THE HYDRAULIC COMPONENTS. If another type of oil is desired, then the system must be completely drained and flushed first.

Appropriate replacements:
ISO 46: Recommend for running in ambient air temperatures of 32°F-110°F, and it contains a kinematic viscosity rating around 46 cSt at 40°C. (1cSt = 1mm²/s)

- Mobil DTE 25
- Mobil DTE 15M
- Amoco Rykon Premium Oil ISO 46
- Chevron Rykon Premium Oil ISO 46
- Conoco Hydroclear AW MV 46
- Exxon Univis N 46
- Pennzoil AWX MV 46
- Shell Tellus T 46
- Texaco Rando HDZ 46

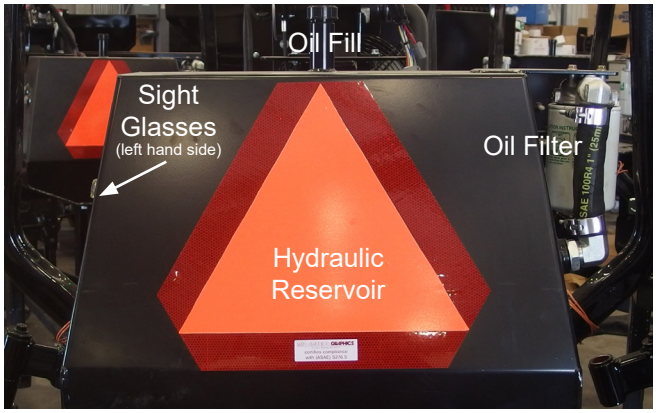

- On a daily basis, monitor the needle in the filter indicator when the oil is at normal operating temperature.

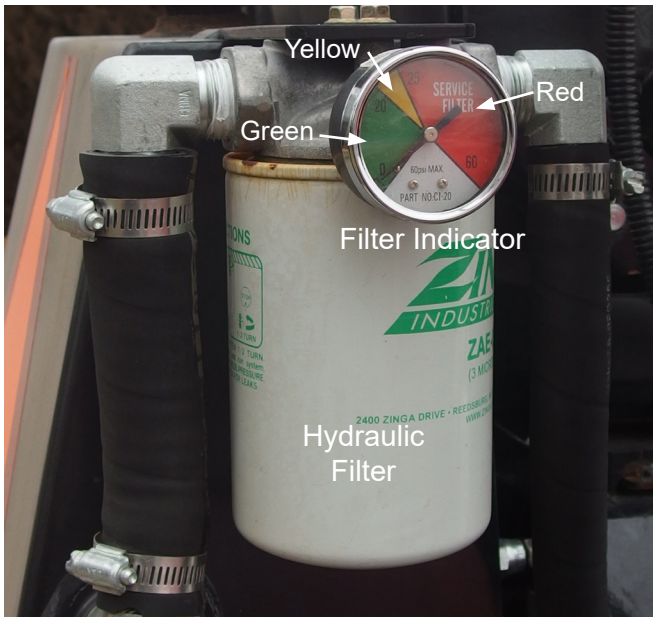

- The filter (part no. 822044) does not need replaced until the needle is in the red portion of the gauge.
- To replace filter , twist the filter counter-clockwise. Replace with new filter by turning it clockwise until tight.
- The hydraulic oil level should be monitored daily with the hydraulic tank's sight glasses on the left hand side of the hydraulic tank.
- Keep the hydraulic oil just above the lower sight glass at all times.
- Fill reservoir through the fill location on top of the reservoir.

Grease Zerk Locations

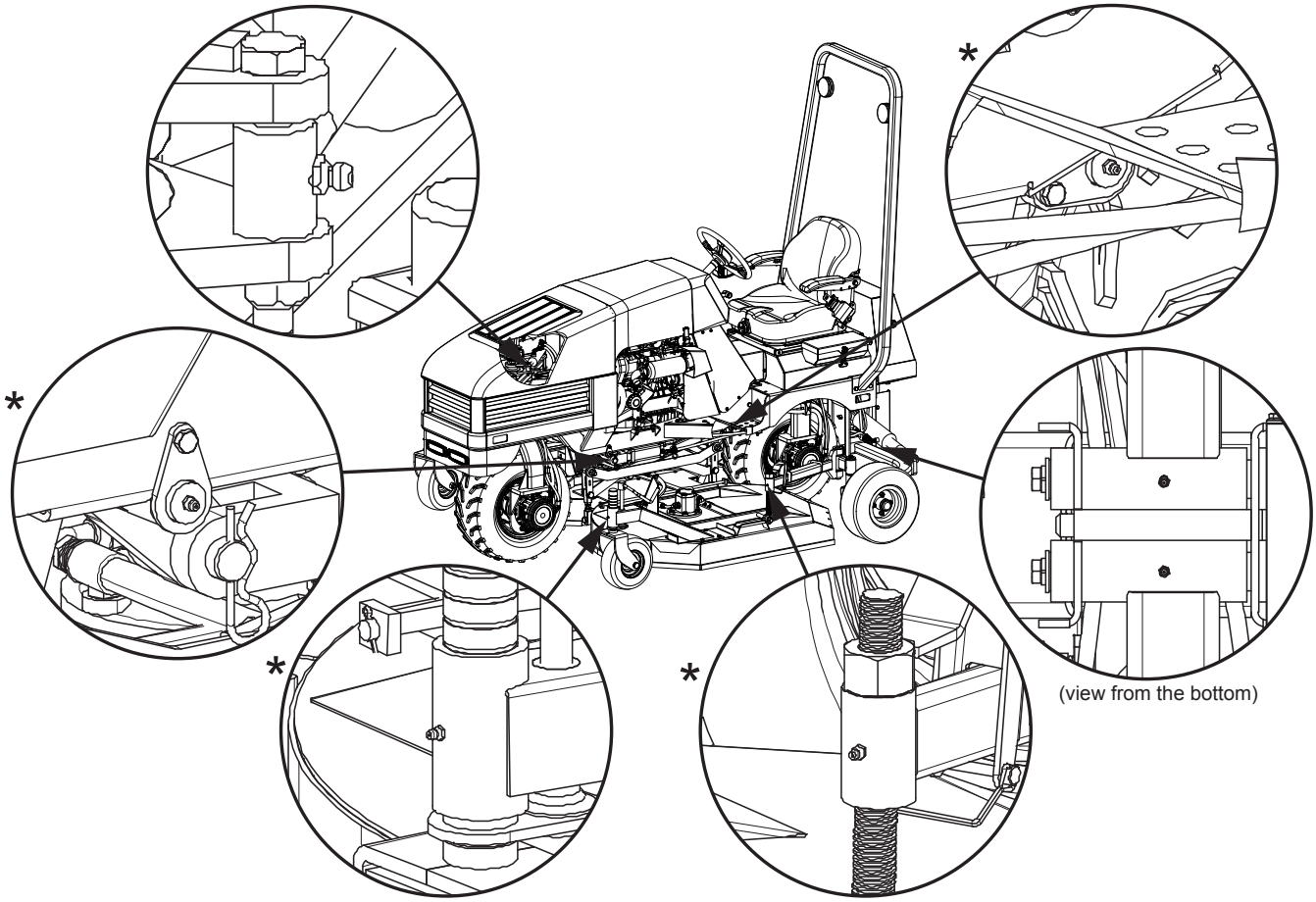

* Denotes a second grease zerk identical to this one on the other side.

PROCEDURE

1) Park on level ground and set park brake.
2) Turn off ATM.
3) Give 2 to 3 shots of grease after every 10 hours of use.

Air Cleaner

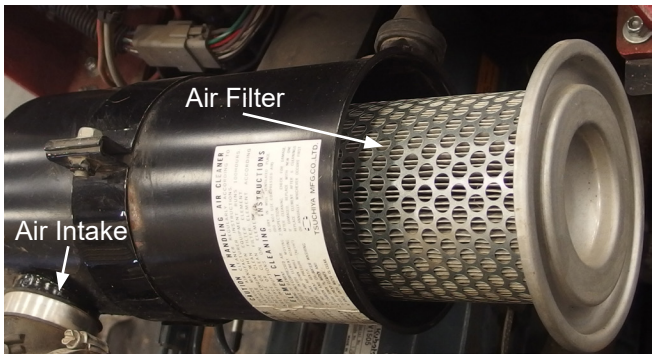

- Make sure intake is always free of debris.
- When engine is turned off, remove the wing bolt.
- Replace the air filter according to the Maintenance Schedule.

Cooling System

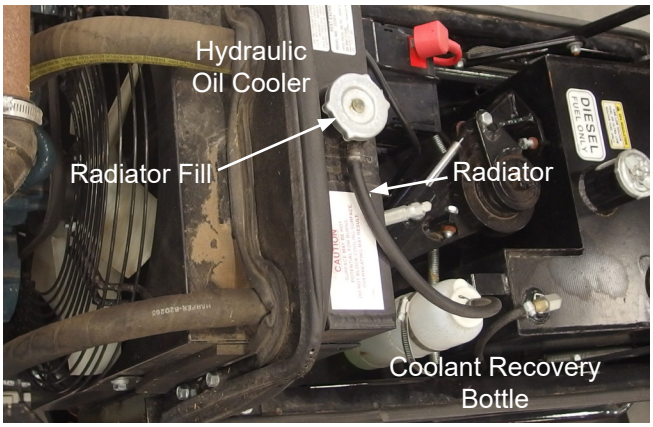

- The radiator and hydraulic oil cooler are located side by side in the same aluminum heat exchanger.
- Clear hydraulic oil cooler and radiator of debris with pressurized air daily or as needed.
- Check radiator level daily and only when engine is cool and not running.
- Remove cap (radiator fill) slowly to relieve any pressure that may be built up.
- Fill up radiator with coolant (50% water/ 50% antifreeze) until coolant is visible in neck of radiator.
- Make sure that the coolant recovery bottle has at least 1" of coolant in bottom. The presence of coolant in the recovery bottle does not mean radiator is full.
- Do **NOT** operate the machine if the engine temperature exceeds 220°F. Severe engine damage may occur if the machine is continuously operated above 215°F. If overheating does occur, diagnose the cooling system and ensuring proper coolant levels and proper air flow across the radiator.

SAFETY WARNING

Hot Coolant and steam from the radiator can cause severe burns. Never open the radiator cap of a hot engine.

Engine Oil

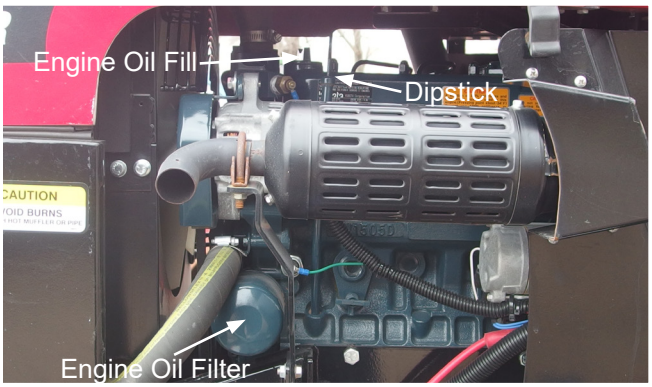

- The dipstick and engine oil fill are located on top of the engine.
- The engine oil filter is located on the left side of the engine as viewed from the operator's seat.
- To get to the engine oil fill or dipstick, the hood should be raised.

PROCEDURE

- Check engine oil level only when engine is turned off.
- Keep engine oil level between the FULL and ADD marks on dipstick at all times. DO NOT OVER-FILL.
- Add engine oil (S.A.E. 10W30) through the engine oil fill location.
- Replace the engine oil/filter according to the Maintenance Schedule.

SAFETY WARNING

Keep dipstick and oil fill cap secured tightly. Engine oil may escape through these orifices when engine is running causing severe burns.

above 25**°C (77°F)**	SAE30 or SAE10W-30 SAE15W-40
-10**°C - 25°C** **(14°F - 77°F)**	SAE10W-30 SAE15W-40
below -10**°C (14°F)**	SAE10W-30

- Filled with SAE10W-30 from the factory, 6.0 L capacity, and change after the first 50 hours.

Fuel Filter

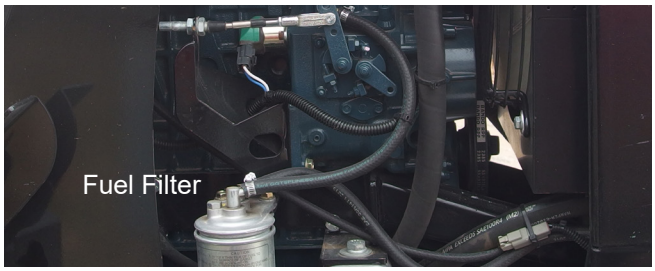

- Fuel filter is located on the right side of the machine when viewed from the operator's seat.

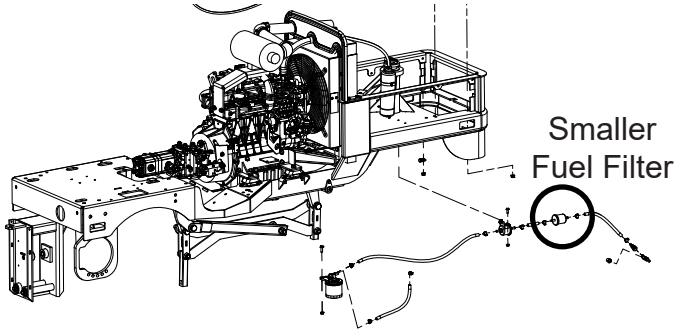

- There is also a smaller in line fuel filter on the bottom of the front right corner of the machine leading from the fuel tank to the main fuel filter.
- The Fuel Shut-off valve is located on the lower right side of the fuel tank. It can be accessed from below the machine.

Relay Panel

- Located under the hood behind the dash of the mower.

Deck Service Mode

- Remove hairpin cotter and flat-washer and swing out support arm.

- Connect chain to deck and replace pin
- With Manual Override switch, lean mower all the way left or right. Then insert chain into chain cutout located on the step. Install the lynch pin in the bottom side of the step for added safety. After that lean the mower to the opposite side.

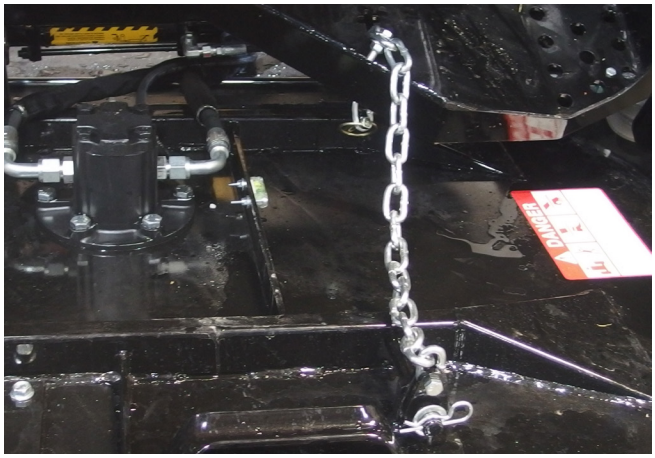

- Block deck up before working under the deck.

Hydraulic Valves

- To get to the hydraulic valves, either remove the two rear pins holding the seat down and rotate the seat forward or remove all (4) pins holding the seat down and remove the seat all together.

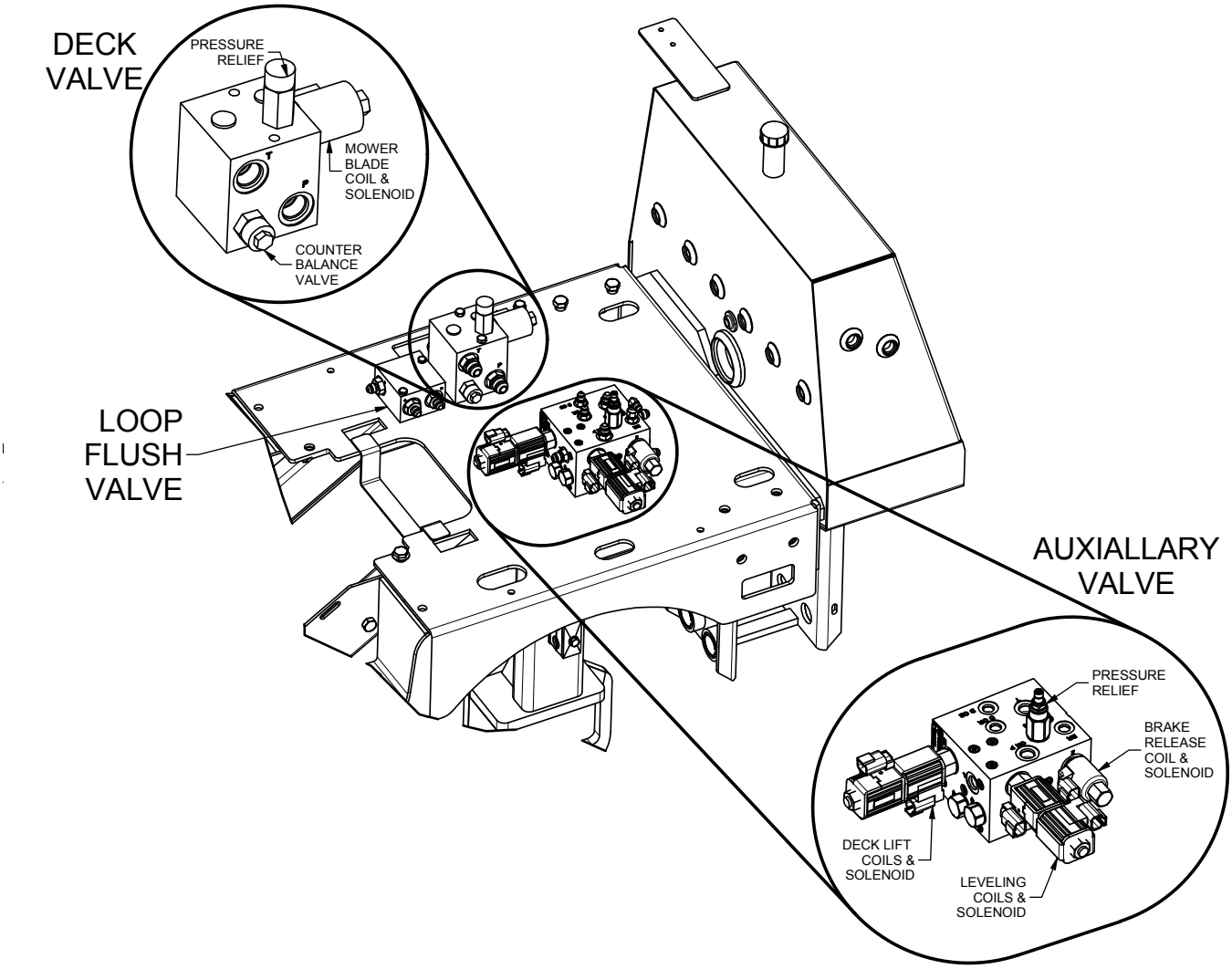

Tow Procedure

Moving the machine without starting the engine

- In order to move the machine without the engine running, the park brakes must be released and the bypass valve must be opened on the propulsion pump.

Park Brake Release

- Both of the wheel motors contain a park brake that is mechanically applied and hydraulically released. Whenever the engine is off (zero system pressure), the brakes are applied.
- Always release the park brakes when towing or pushing the unit.

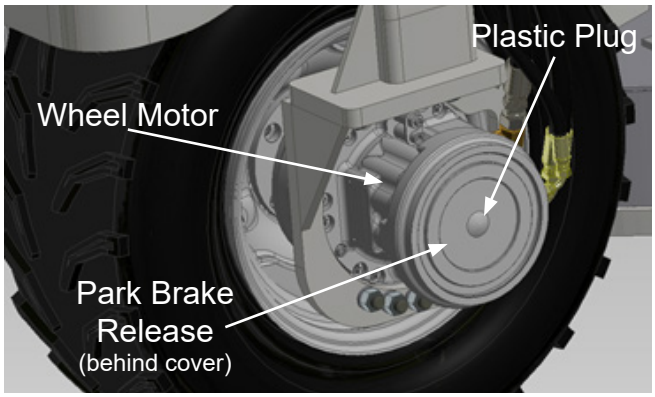

PRECAUTION

- Towing or pushing the unit with the park brakes applied may cause serious damage to internal brake parts.

PROCEDURE

1. Remove plastic plug from the center of the park brake housing.
2. Install brake release tool (P/N 575064) by placing on brake housing and tightening the screw into the piston. These tools can be found inside the toolbox.
3. Tighten the nut until the motor shaft turns freely.

- After towing the unit, follow procedure in opposite order to remove brake release tool and install new plastic plug.

Opening the Bypass Valve

- The bypass valve is located on the top side of the propulsion pump between the high-pressure ports. The valve can be accessed by removing the center cowling panel.

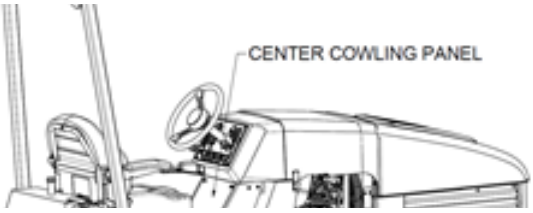

- Open the bypass valve when moving the machine for short distances. The bypass valve connects the high-pressure ports A & B. Only use this valve in an emergency case and for a short distance.
- The bypass valve is not a tow valve and can not be used to pull the machine for a long distance.

PRECAUTIONS

- The bypass valve is intended only for moving a vehicle a very short distance and is not intended for towing a vehicle behind a truck or tractor. Note: Serious damage to the hydrostatic drive will result if the vehicle is towed.
- Close the bypass valve tightly when finished moving unit. Failure to close valve tightly will result in full or partial loss of power.

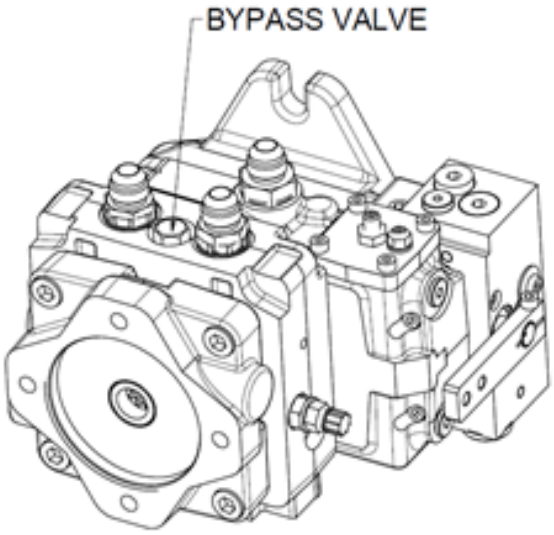

PROCEDURE

- To open the bypass valve, turn it counter-clockwise. It can be completely re moved from the pump housing. However, to avoid oil leakage, only turn the valve 2 turns.
- After the machine has been moved, reinstall the bypass valve and reinstall the center cowling panel.

Tie Down Locations

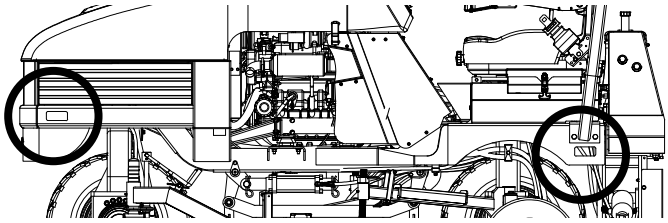

There are (4) tie down locations designated on the machine that are located at the front and rear of each side of the machine, and they are accompanied by the following decal:

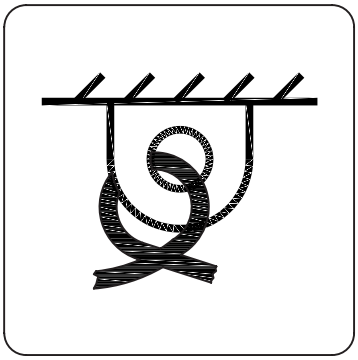

Adjustments

Seat Adjustment

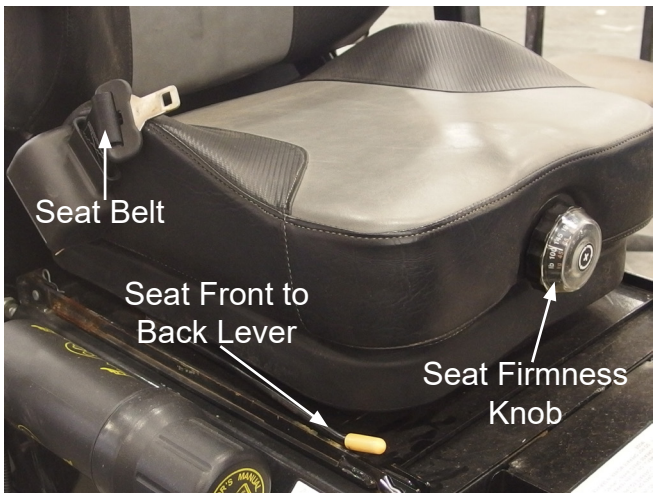

- The lever with the yellow handle controls the chair's forward and back movement to allow for either more or less leg room.
- The round knob adjusts the ride quality. Turn the knob clock-wise for a firmer ride, and counter-clockwise for a softer ride.

- Adjust the screw to change the angle of the arm rests.

- The seat belt is retractable and will lock up on impact or accident.

Cutting Height

- Park the machine on level ground.
- Start the machine and raise the deck using the switch on the dash.

- Using the decal on the side of the frame or the picture below, identify the cylinder spacer(s) needed to achieve the desired cut height. The cylinder spacers are located in the tool box on the LH side of the seat frame. The spacers provided include:
  2 - 0.25”
  1 - 0.50”
  1 - 1.00”

X CYLINDER SPACER	Y CUT HEIGHT
⌀	3.00"
0.25"	3.25"
0.50"	3.50"
0.75"	4.00"
1.00"	4.50"
1.25"	4.75"
1.50"	5.00"
1.75"	5.50"
2.00"	6.00"

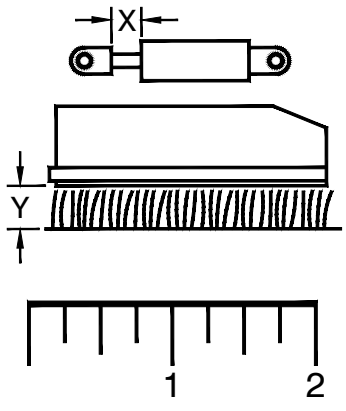

- Install the cylinder spacer(s) onto the deck lift cylinder (see pg. 5 for location).
- Lower the deck all the way down using the switch on the dash.
- The outer deck height is controlled by the arm linkage attached to the stabilizer arm.
- Using the crank located on the caster wheels, raise the caster wheels so that the deck is not supported by the caster wheel. Turn CCW until the wheel is not touching the ground. Repeat this step for both sides.
- Using the outer deck screw adjustment, adjust the deck so that it is level with the center of the deck. A bubble level is mounted on the deck for ease of adjustment. Repeat for both sides.

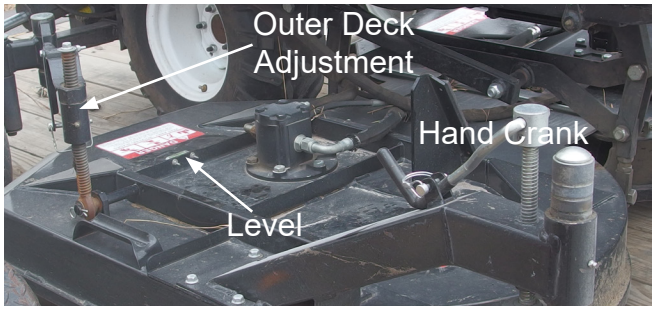

- Lastly, adjust both caster wheels down until they touch the ground.

Standard Torque Chart

SAFETY WARNING!

Refer to the Standard Torque Chart whenever bolts, nuts or screws are tightened.

PRECAUTIONS

- When tightening two or more fasteners on the same part, DO NOT tighten the fasteners completely one at a time. To avoid distortion, first tighten all fasteners in sequence to one-third of torque value, then tighten to two-thirds of torque value, then tighten to full value.
- All lug nuts should be torqued to 140 ft-lbs (190 N-m).

U.S. BOLT TORQUE SPECIFICATIONS

Torque in foot-pounds

Diameter	Thread per inch	SAE 2	SAE 5	SAE 8	SHCS
1/4	20	4	8	12	14
1/4	28	6	10	14	16
5/16	18	9	17	25	29
5/16	24	12	19	29	33
3/8	16	16	30	45	49
3/8	24	22	35	50	54
7/16	14	24	50	70	76
7/16	20	34	55	80	85
1/2	13	38	75	110	113
1/2	20	52	90	120	126
9/16	12	52	110	150	163
9/16	18	71	120	170	181
5/8	11	98	150	220	230
5/8	18	115	180	240	255
3/4	10	157	260	380	400
3/4	16	180	300	420	440
7/8	9	210	430	600	640
7/8	14	230	470	660	700
1	8	320	640	900	980
1	12	350	710	990	1060

Baseline torque is calculated for a non-lubricated, un-plated bolt.

BOLT TORQUE FACTORS

LUBRICANT OR PLATING	TORQUE CHANGES
Oil	Reduce torque 15% to 25%
Chrome plating	No change
Cadmium plating	Reduce torque 25%
Zinc plating	Reduce torque 15%

Service Parts

Filters

Engine Air Filter..... 802064
Engine Oil Filter..... 302058
Fuel Filter (Cannister)..... 302057
Fuel Filter (Inline)..... 302103
Hydraulic Oil Filter..... 822044

Belts

Engine Fan Belt..... 802063

Blades

RH Swinging Blade Set..... 500269
LH Swinging Blade Set..... 500268
Swinging Blades Bolt Kit
(1 Deck Only) 500319
RH Fixed Blade Set..... 500271
LH Fixed Blade Set..... 500270
Fixed Blades Bolt Kit
(1 Deck Only)..... 500320

Wheels and Tires

Stabilizer Wheel Assembly..... 800057
Caster Wheel Assembly..... 800093
Drive Wheel..... 842019
Drive Tire..... 842020
Drive Wheel and Tire Assy..... 843007

Service Schedule

Daily or Before Starting the Engine

- □ Check Engine Oil Level..... SAE 10W30 or 15W40
  - (See Maintenance section for details)
- □ Check Hydraulic Oil Level..... Crown AW46
  - (See Maintenance section for details)
- □ Check Fuel Level..... Clean #2 Diesel Fuel
- □ Visually Inspect..... Fan belt, bolts, fittings, hoses, or any damaged parts
- □ Check Radiator & Oil Cooler..... Clean off debris as needed
- □ Check Engine Screens……..…..... Clear debris as needed to ensure proper air flow
- □ Check Air Cleaner Intake..... Clear debris as needed
- □ Check Engine Coolant Level..... 50% anti-freeze, 50% water
- □ Grease..... Refer to page 10
- □ Check Drive Tires..... Visually inspect tires to ensure proper inflation & no damage

Every 50 Hours

- □ Change Engine Oil & Filter..... After initial 50 hours, change engine oil
  - (every 200, thereafter)
- □ Change Inline Fuel Filter..... After initial 50 hours, change filter
  - (P/N: 302103, every 200 thereafter)
- □ Check Tire Pressure..... Inflate drive tires to 15 psi
- □ Check of Fuel Pipes & Clamps..... See Kubota Manual for details
- □ Check Lug nuts..... Torque to 140 ft-lbs

Every 100 Hours

- □ Check Engine Air Filter..... Clean or replace as needed (P/N: 802064)
- □ Check Fan Belt Tightness..... Tighten as needed
- □ Check Hydraulic Oil Filter..... Replace when needed (P/N: 822044)

Every 200 Hours

- □ Change Engine Oil..... SAE 10W30 or 15W40
  - (See engine manual)
- □ Change Engine Oil Filter..... P/N: 302058
- □ Check Intake Air Lines..... Clear debris as needed
- □ Replace In-line Fuel Filter……..... P/N: 302103
- □ Check Radiator Hoses & Clamps..... Repair or replace as necessary

Every Year

- □ Replace Engine Air Filter..... P/N: 802064
- □ Check Hydraulic Oil Condition..... Crown AW46
  - (See Maintenance section for details)
- □ Check Battery..... Clean terminals if necessary

Every 500 Hours

- □ Replace Engine Fan Belt..... P/N: 802063
- □ Replace Cannister Fuel Filter..... P/N: 302057

Every 1500 Hours

- □ Check fuel injection nozzle injection pressure ...See Kubota Manual
- □ Change Hydraulic Oil..... Crown AW46
    - (See Maintenance section for details)

Every 3000 Hours

- □ Check Fuel Injection Pump

Every Two Years

- □ Change Engine Coolant..... 50% anti-freeze, 50% water
- □ Replace Battery..... P/N: 832011
- □ Replace radiator hoses and clamp bands..... See parts manual
- □ Replace fuel hoses and clamp bands..... See parts manual
- □ Replace air intake hose..... See parts manual

BEFORE OPERATION

- Safety Checklist
  - o Read and understand the Operator's Manual (located in the manual holder to the left of the seat).
  - o Clear all foreign objects such as rocks, bottles or other hard materials that lay in the area to be mowed.
  - o Follow all procedures described in the Maintenance section.
  - o Fill with #2 diesel fuel, if needed, while engine is cool.
  - o Visually check tires.
  - o Visually inspect machine for loose fittings, fasteners, hoses, etc.
  - o Know the location and function of all controls and how to stop quickly in an emergency.
  - o Adjust seat to a comfortable position.
  - o Fasten safety belts.

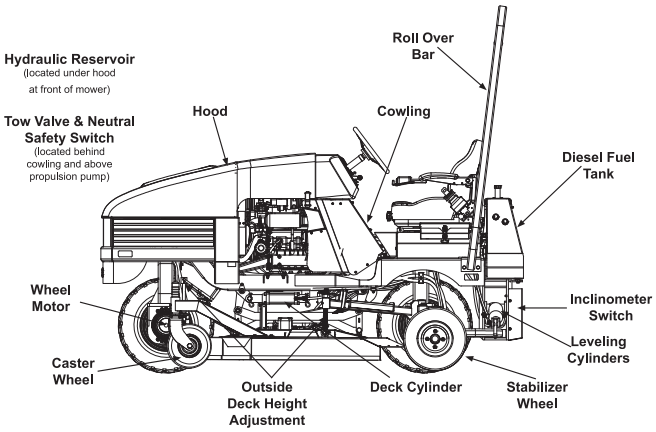

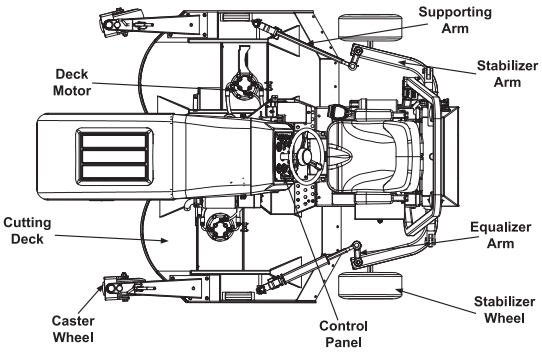

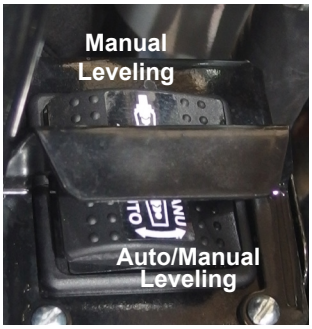

- Perform the daily maintenance checklist (For details, see the maintenance section of the Operator's Manual).
  - o Check engine oil level
  - o Check hydraulic oil level
  - o Check fuel level
  - o Visually inspect the fan belt, bolts, fittings, hoses, or any damaged parts
  - o Check radiator and oil cooler
  - o Check engine screens
  - o Check Air cleaner intake
  - o Check engine coolant level
  - o Grease all zerks (see page 10)
  - o Check drive tires

STARTING

- To start the machine, it must be in neutral and the mower blades must be turned off.
- Turn the key over until the mower starts, and release the key.
- Set the cutting height following the direction laid out on page 15.

DURING OPERATION

- FASTEN SEAT BELT
- To prevent possible eye injury, always wear SAFETY GLASSES while operating machine.
- Park Brake – Make sure the park brake is disengaged before operation. Set the park brake when unit is not in use or is parked on an incline. The indicator light illuminates when the park brake is set.
- The park break is applied when the operator is out of the seat.
- Throttle – Start at low throttle. After allowing engine to warm up, operate machine at full throttle.
- To turn the mower blades on, the operator must be in the seat, and the hydraulic oil temp must be below 190° F.
- Mower Switch - Used to engage the mower blades.
- Manual Override Switch - It is used when the operator would like to lean the mower either way on their own using the Manual Leveling Switch on the right arm rest, otherwise it should be left alone to allow the machine to auto-level itself up to 34° either way.
- Deck Wing Raise/Lower - This switch can raise and lower he deck wings in order to avoid obstacles that may be in the machines path. Be sure to disengage the Mower Switch before raising deck wings.
- Lights Switch - Use the lights as needed to avoid obstacles that could damage the machine or harm the operator in any way.

NOTES

Harper Industries, Inc.
151 E. Highway 160
Harper, KS 67058

Telephone: 620-896-7381
Toll-Free: 800-835-1042
Fax: 620-896-7129

Website: www.harperindustries.com

E-mail: info@harperindustries.com

ATM 72 LC

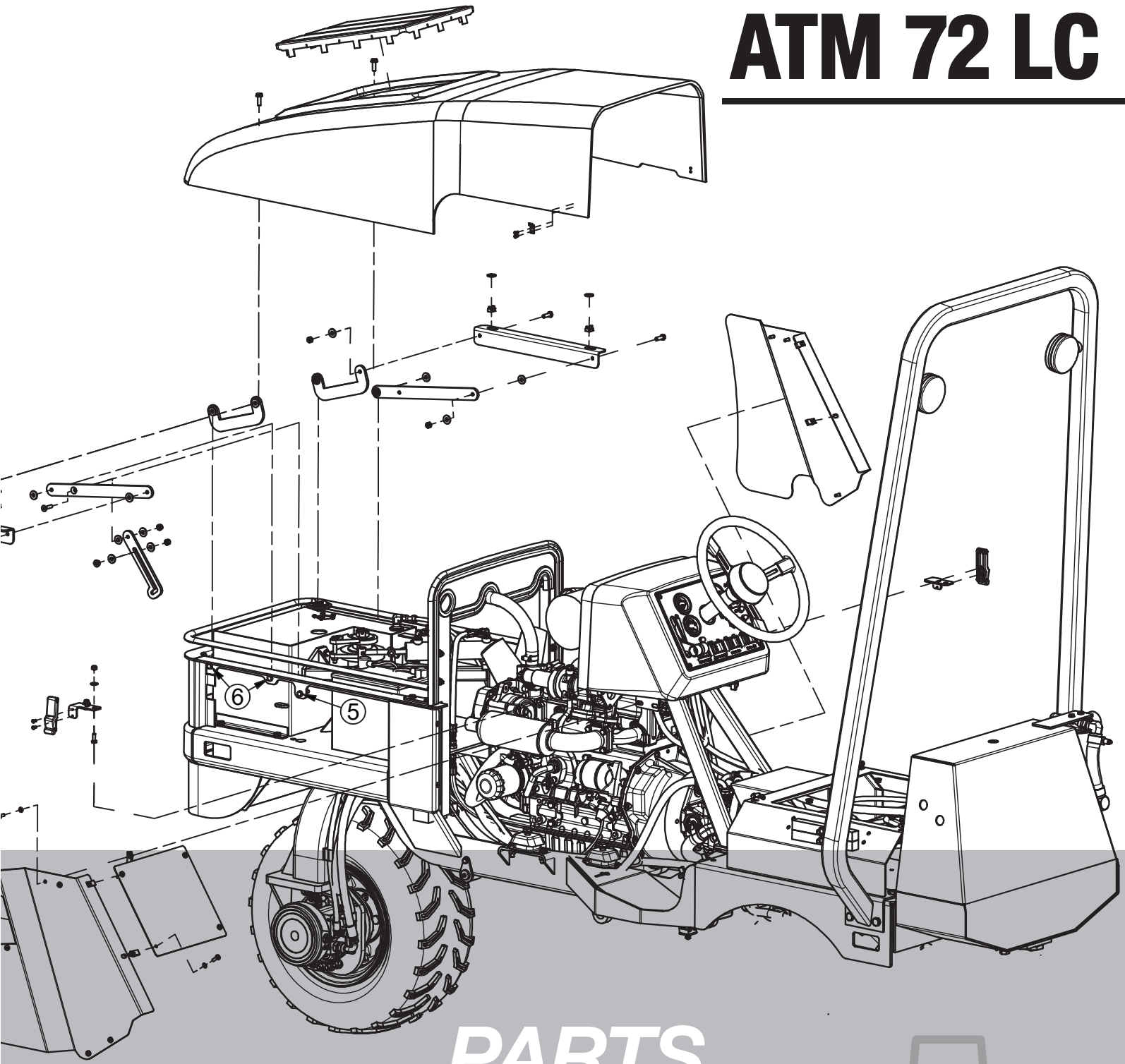

PARTS MANUAL

All Terrain Mower®
72 LC

5-2020

HARPER INDUSTRIES INC

Table of Contents

Parts Section

Frame & Assemblies

- Front Steering Assembly..... 1.1
- Rear Stabilizer Arm Assembly..... 1.2
- Deck Linkage Installation..... 1.3
- Engine Assembly..... 1.4
- Engine Installation..... 1.5
- Fuel Tank Installation..... 1.6
- Steering Tower and Foot Pedal Installation..... 1.7
- Console Assembly..... 1.8
- ROPs and Steering Wheel Installation..... 1.9
- Electrical Assembly..... 1.10
- Hood and Cowling Installation..... 1.11
- Toolbox and Deck Lift Assembly..... 1.12
- Seat and Screens Assembly..... 1.13
- Wheel and Tire Installation..... 1.14
- Deck Assembly..... 1.15
- Deck Installation..... 1.16
- Decal Layout..... 1.17

Hydraulic Systems

- Hydraulic Schematic..... 2.1
- Hydraulic Tank Assembly..... 2.2
- Propulsion Pump and Wheel Motor Assy..... 2.3
- Valve Assemblies..... 2.4
- Valve and Tank Installation..... 2.5
- Propulsion System..... 2.6
- Propulsion Circuit 2.7
- Propulsion Plumbing - Pump and Valves..... 2.8
- Propulsion Plumbing - Wheel Motors..... 2.9
- Machine Hydraulic System..... 2.10
- Gear Pump Assembly and Plumbing..... 2.11
- Steering Circuit..... 2.12
- Steering Plumbing..... 2.13
- Auxilary Circuit..... 2.14
- Deck Lift Plumbing..... 2.15
- Leveling Plumbing..... 2.16
- Deck Circuit..... 2.17
- Deck Plumbing..... 2.18
- Oil Cooler Plumbing..... 2.19

Electrical Systems

- Electircal Schematic Overview..... 3.1
- Engine Harness..... 3.2
- Relay Harness..... 3.3
- Master Harness..... 3.4
- Instrument Panel Harness..... 3.5
- Electrical Wiring Logic..... 3.6
- Auxiallary Valve - Coil Wiring identification..... 3.7

Options

- Wheel Weight Kit..... 4.1

Frame & Assemblies

HARPER TURF EQUIPMENT

FRONT STEERING ASSEMBLY

Parts List		
ITEM	PART #	DESCRIPTION
1	110107	NUT, 3/8-16 HEX JAM GR 2
2	110114	WASHER, 2.25 x .75 x .25T
3	110166	BOLT, 1/2-13 X 2.0 SHCS
4	110425	BOLT, 3/8-16 X 1.25
5	110436	BOLT, 3/8-16 X 2.5
6	110607	NUT, 3/4-10, SLOTTED
7	110610	NUT, 1/2-13
8	110621	NUT, 3/8-16, UNITORQUE LOCK
9	110666	WASHER, 1/2" LOCK
10	120235	ADAPTER, 4MJ-4MB90
11	410261	COTTER PIN, 1/8 X 1.75
12	510106	BEARING
13	510108	SEAL
14	510174	GREASE ZERK, 1/4-28 ST
15	510176	COTTER PIN, 1/8 X 1
16	510209	RACE
17	510228	KEY, 1/4 X 1/4 X 1.0 in
18	810297	BOTTOM SEAL
19	810299	BEARING LOWER
20	810300	SPACER, STEERING TOWER
21	810533	STEERING ARM ASSY
22	815081	SPINDLE WELDMENT, FRONT WHEEL
23	823015	STEERING CYLINDER
24	823026	MOTOR, WHEEL 30.5 CI
25	842016	BEARING CUP, 3.250 X .65

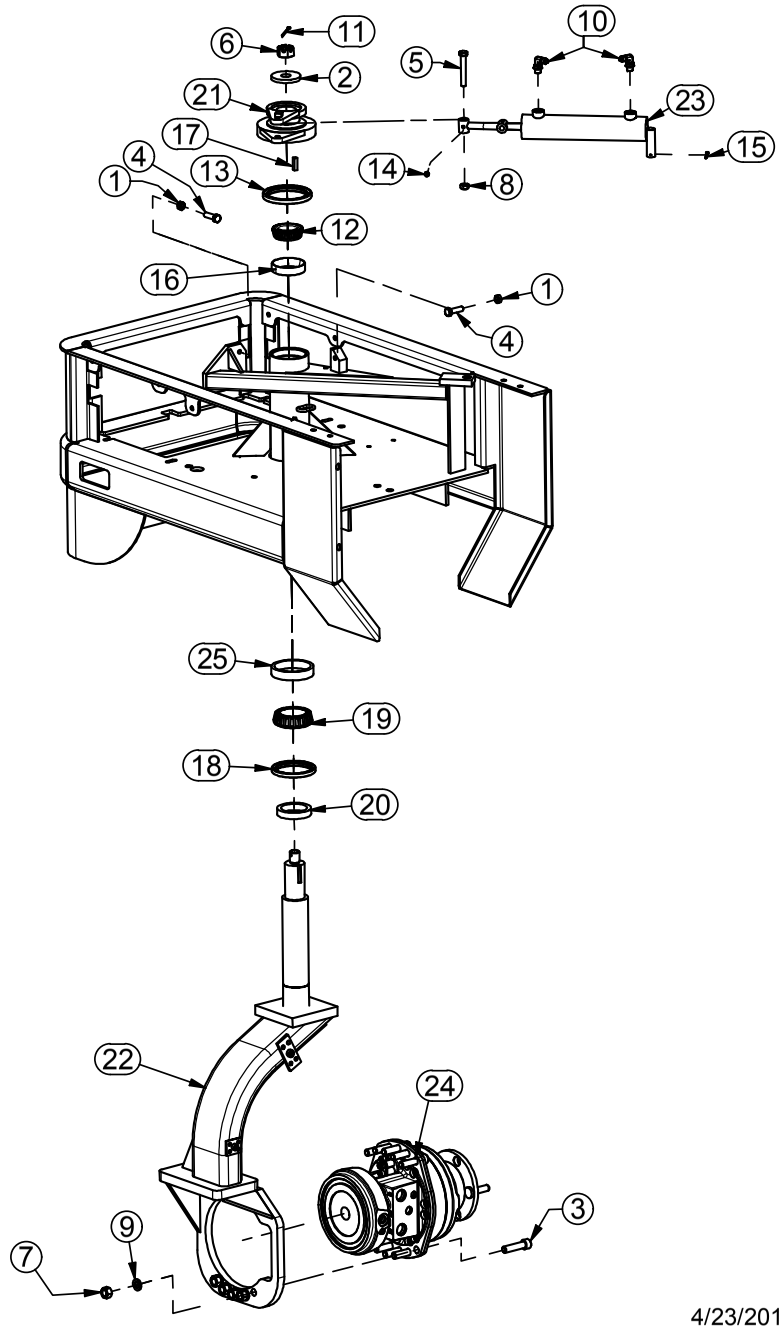

ASSEMBLY STATION #1: 875001

4/23/2019

REAR STABILIZER ARM ASSEMBLY

Parts List		
ITEM	PART #	DESCRIPTION
1	102019	BUSHING, 1-1/2 X 1-1/4 X 1-1/2
2	110052	WASHER, 1.875 X .563 X .125, FLAT
3	110166	BOLT, 1/2-13 X 2.0 SHCS
4	110220	BOLT, 1/2-13 X 1, WIZ FLANGE
5	110442	BOLT, 1/2-13 X 1.25
6	110610	NUT, 1/2-13
7	110613	NUT, CASTLE 3/4-16
8	110658	WASHER, 1/2" FLAT STANDARD
9	110666	WASHER, 1/2" LOCK
10	110678	WASHER, 3/4 FLAT SAE
11	202023	BUSHING, 1.5 X 1.25 X 2.0 SPLIT CG/ID
12	510174	GREASE ZERK, 1/4-28 ST
13	510235	HUB ASSEMBLY
14	510463	COTTER PIN, 1/8 X 1.25
15	810130	EQUALIZER ARM ASSY
16	810223	PIN, STABILIZER PIVOT
17	810319	BUSHING
18	810610	VERTICAL SHAFT
19	815100	WELDMENT, RH STABILIZER ARM
20	815101	WELDMENT, LH STABILIZER ARM
21	823026	MOTOR, WHEEL 30.5 CI

HUB INSTALLATION

1. TIGHTEN NUT ON SPINDLE WHILE ROTATING HUB
2. TORQUE NUT TO 50 FT LBS
3. BACK OFF NUT UNTIL FIRST CASTELLATION ALIGNS WITH HOLE
4. INSTALL COTTER PIN IN HOLE

510235 HUB - SERVICE PARTS		
PART #	QTY	DESCRIPTION
110617	4	LUG NUT, 1/2-20
510465	2	RACE, BEARING
510466	2	BEARING, ROLLER
510467	1	SEAL, CR12407
510469	1	CAP, DUST

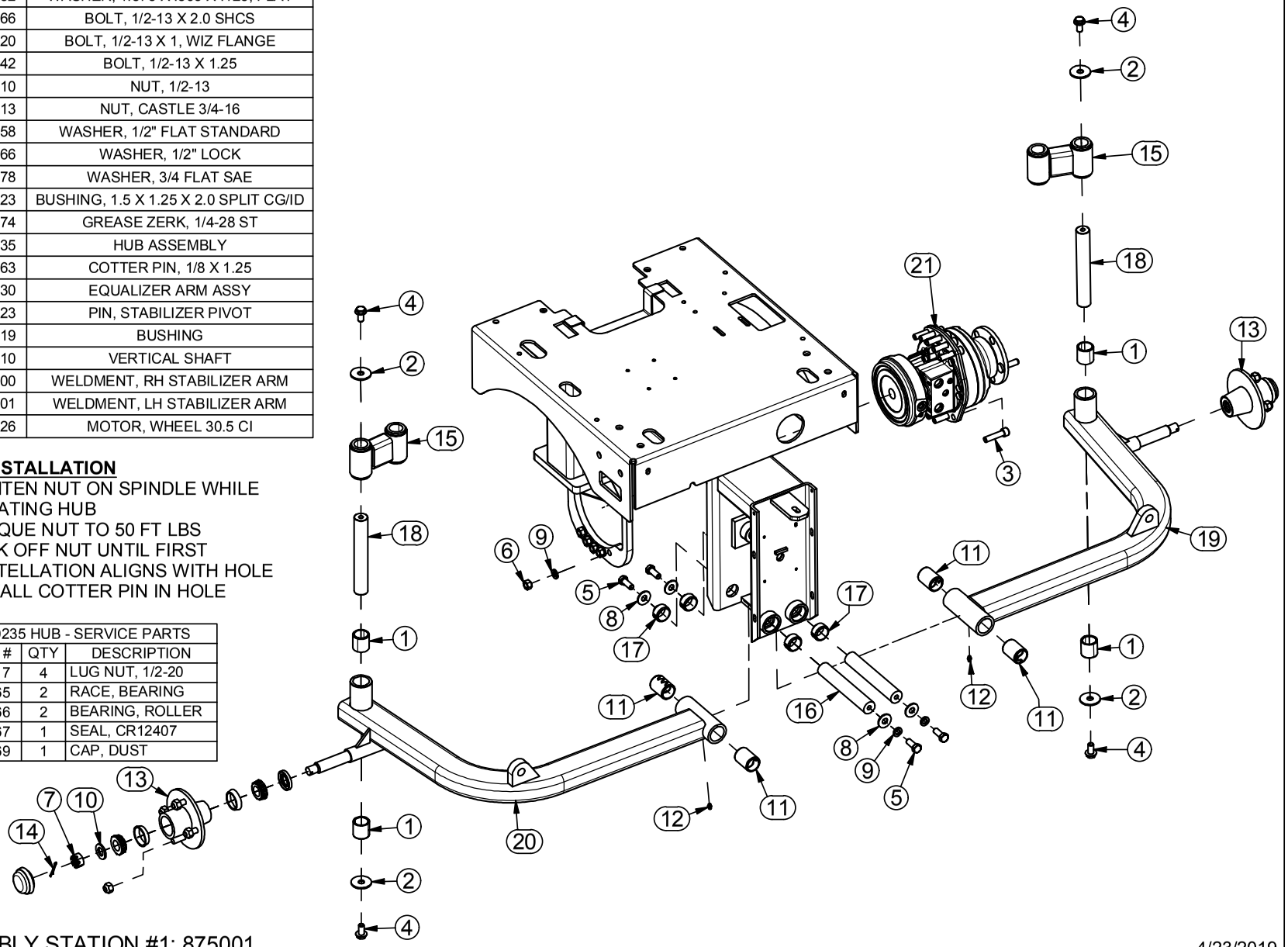

ASSEMBLY STATION #1: 875001

4/23/2019

DECK LINKAGE INSTALLATION

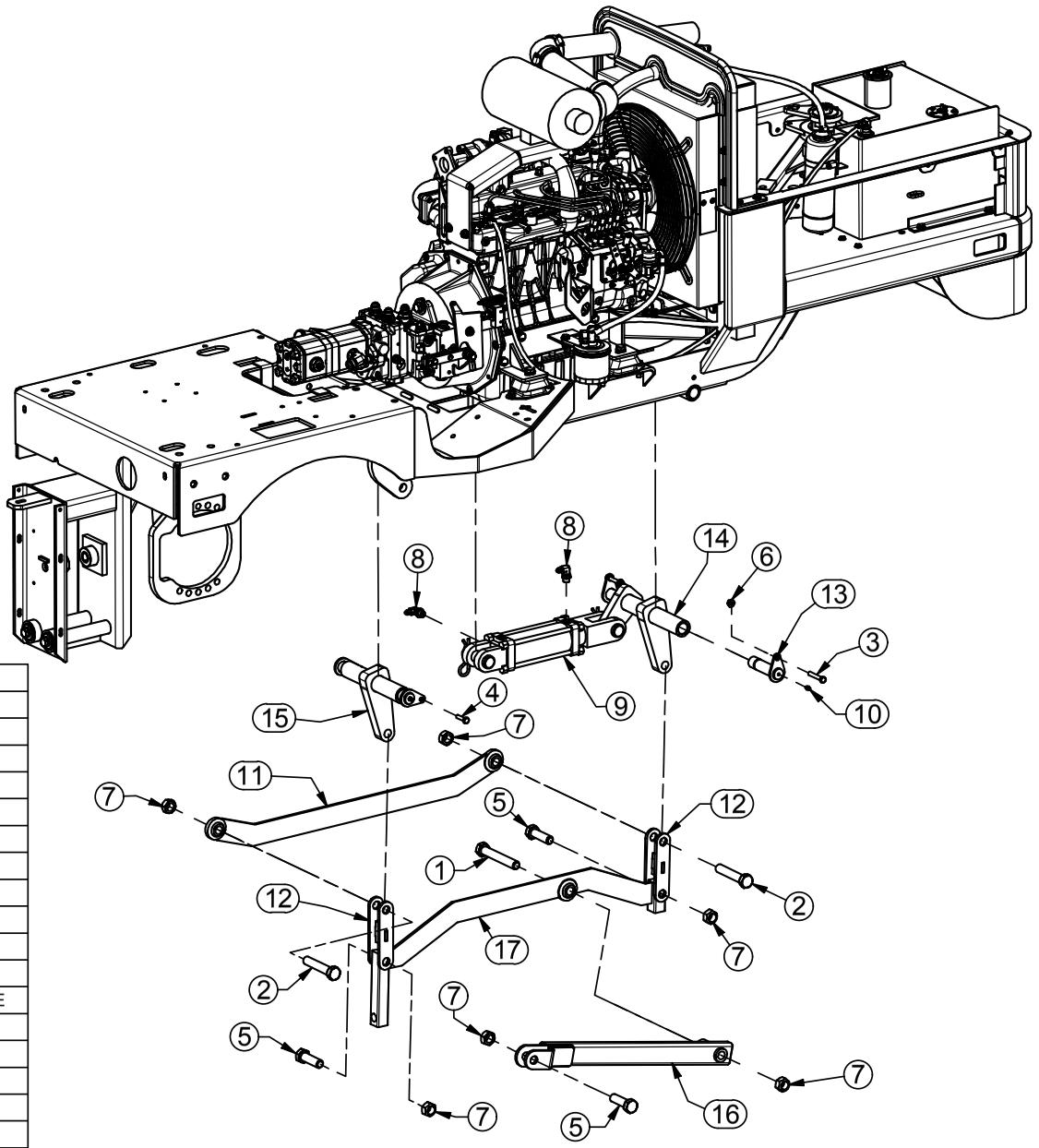

Parts List		
ITEM	PART #	DESCRIPTION
1	110070	BOLT, 3/4-10 X 5.0
2	110330	BOLT, 3/4-10 X 4.0 GR 5 HEX HEAD
3	110378	BOLT, 5/16-18 X 2.0
4	110421	BOLT, 5/16-18 X 1-1/4
5	110454	BOLT, 3/4-10 X 2.5
6	110606	NUT, 5/16-18 WIZ FLANGE
7	110625	NUT, 3/4-10, UNITORQUE LOCK
8	120220	ADAPTER, 4MJ-6MB90
9	323018	CYLINDER - 2 x 4, SAE-6, TIE ROD
10	510174	GREASE ZERK, 1/4-28 ST
11	815074	WELDMENT, UPPER DECK LIFT LINKAGE
12	815075	WELDMENT, DECK CONNECTING LINK
13	815076	WELDMENT, DECK PIN
14	815077	WELDMENT, FRONT DECK PIVOT BAR
15	815078	WELDMENT, REAR DECK PIVOT BAR
16	815089	WELDMENT, DECK LIFT PIVOT
17	815090	WELDMENT, LOWER DECK LIFT LINKAGE

ASSEMBLY STATION #2: 875002

4/23/2019

ENGINE ASSEMBLY

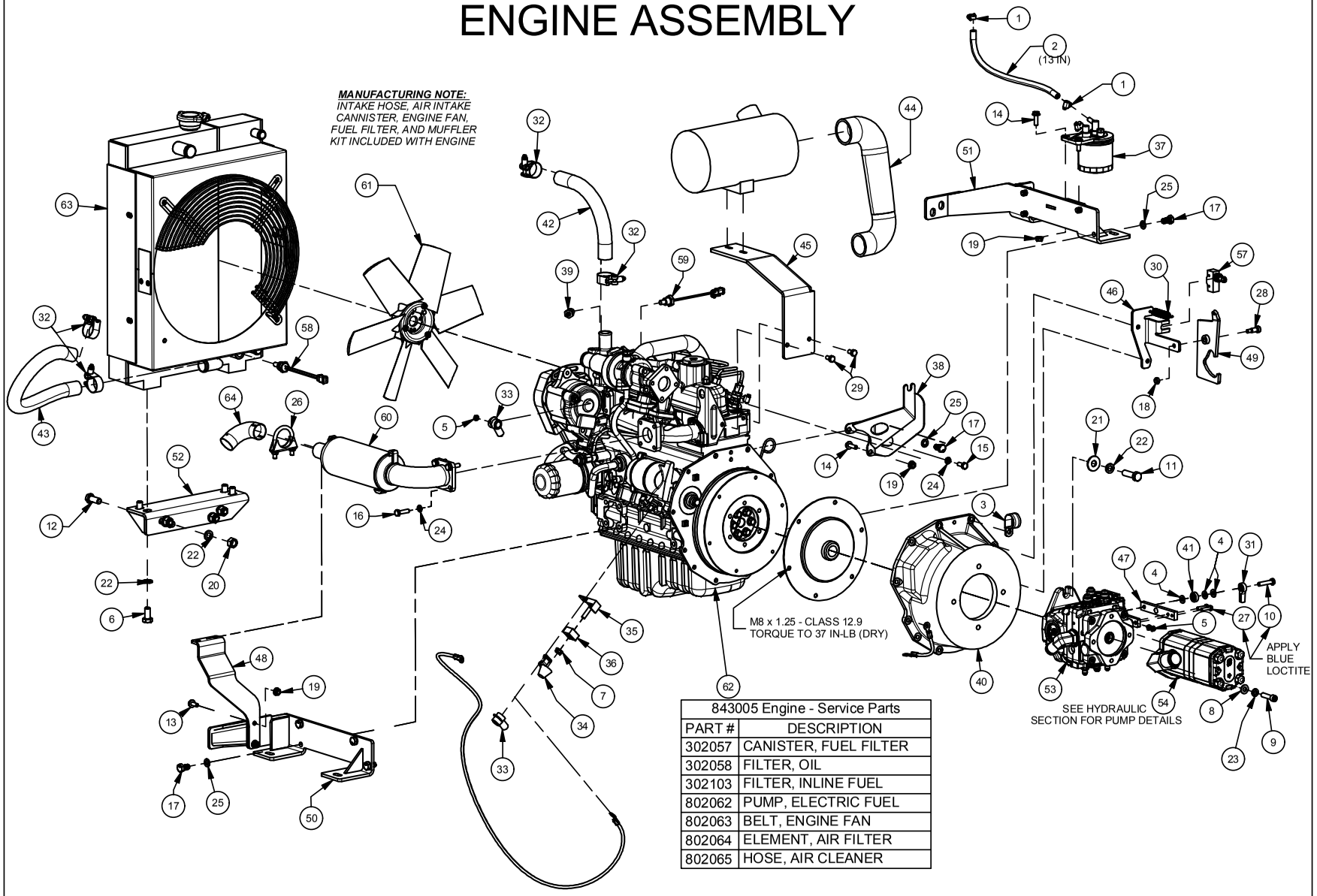

843005 Engine - Service Parts	
PART #	DESCRIPTION
302057	CANISTER, FUEL FILTER
302058	FILTER, OIL
302103	FILTER, INLINE FUEL
802062	PUMP, ELECTRIC FUEL
802063	BELT, ENGINE FAN
802064	ELEMENT, AIR FILTER
802065	HOSE, AIR CLEANER

ASSEMBLY STATION #2: 875002

7/17/2019

ENGINE ASSEMBLY

Parts List			Parts List		
ITEM	PART #	DESCRIPTION	ITEM	PART #	DESCRIPTION
1	100361	CLAMP, HOSE #4 .25 MINI	33	132014	INSULATOR CAP, (ALTERNATOR)
2	100756	Hose, 5/16 High Pressure Fuel	34	132092	FUSE COVER, BUSS CFCOVER-1R
3	102074	Clamp, Adel .75w x 1.25id x .406 Hole	35	132093	FUSE HOLDER, BUSS CFBAR1-M8XSP
4	110069	WASHER, 5/16" FLAT SAE	36	132150	FUSE, 50 AMP
5	110074	Hex Nut M6 X 1.0 Thd	37	302057	CANISTER, FUEL FILTER
6	110086	BOLT, 1/2-13 X 1.0	38	315186	Weldment, Kubota Throttle Mnt
7	110141	NUT, M8 X 1.25 WIZFLANGE	39	332004	Sender, Water, 3/8 Npt
8	110155	WASHER, 3/8" FLAT SAE	40	342011	ADAPTER - PUMP, KUBOTA 1505, KIT
9	110178	BOLT, 3/8-16 X 1.5 SHCS	41	540079	BEARING, BALL, 1620RS
10	110377	BOLT, 5/16-18 X 1-1/2	42	801002	HOSE, UPPER RADIATOR
11	110419	BOLT, 1/2-13 X 1.75	43	801003	HOSE, LOWER RADIATOR
12	110442	BOLT, 1/2-13 X 1.25	44	802065	HOSE, AIR CLEANER
13	110444	BOLT, 5/16-18 X 0.75, WIZ FLANGE	45	810826	MOUNT, AIR CLEANER
14	110459	BOLT, 5/16-18 X 1, WIZ FLANGE	46	810885	BRKT, NEUTRAL CENTERING
15	110469	BOLT, M8x1.25 x 20 Gr 10.9	47	810888	BRKT, PUMP LEVER
16	110486	BOLT, M8x1.25 x 30 Gr 10.9	48	810900	SUPPORT, EXHAUST
17	110560	BOLT, M10-1.25 X 20 HHCS 8.8 PLAIN	49	815096	WELDMENT, NEUTRAL CENTERING
18	110600	NUT, 5/16-18, UNITORQUE LOCK	50	815097	WELDMENT, LH ENG/RAD MOUNT
19	110606	NUT, 5/16-18 WIZ FLANGE	51	815098	WELDMENT, RH ENG/RAD MOUNT
20	110610	NUT, 1/2-13	52	815099	WELDMENT, RADIATOR MOUNT
21	110658	WASHER, 1/2" FLAT STANDARD	53	823024	PUMP, PM10 PROP 1.24 CI/.43 CI
22	110666	WASHER, 1/2" LOCK	54	823025	PUMP, DOUBLE GEAR 1.16 CI / .49 CI
23	110672	WASHER, 3/8" LOCK	55	830063	CABLE, POSITIVE BATTERY
24	110674	WASHER, 5/16" LOCK	56	832001	CABLE, GROUND
25	110689	WASHER, 10mm LOCK	57	832002	SWITCH ROLLER PLUNGER
26	110779	CLAMP, 1 1/2" EXHAUST	58	832076	Switch, 190 F Temp, 8MB, N.C. Rising
27	110931	BOLT, M6x1 x 25 Gr 8.8	59	832079	SWITCH, 215 F TEMP, 6MP, N.O. RISING
28	111070	BOLT, 3/8 X .625 SHOULDER SHCS	60	842017	MUFFLER KIT, KUBOTA C31
29	111089	BOLT, M8x1.25 x 16 Gr 8.8	61	842018	FAN, ENGINE COOLING
30	111149	SPRING, TENSION .625 x .069 x 3.0	62	843005	ENGINE, KUBOTA V1505 TIER 4F (25hp)
31	111150	ROD END, 5/16-24 RH, FEMALE	63	843006	COOLING PACKAGE, RADIATOR & OIL
32	112101	CLAMP, 1.50", T-BOLT	64	942204	EXHAUST ELBOW 1 3/8

ASSEMBLY STATION #2: 875002

7/17/2019

ENGINE INSTALLATION

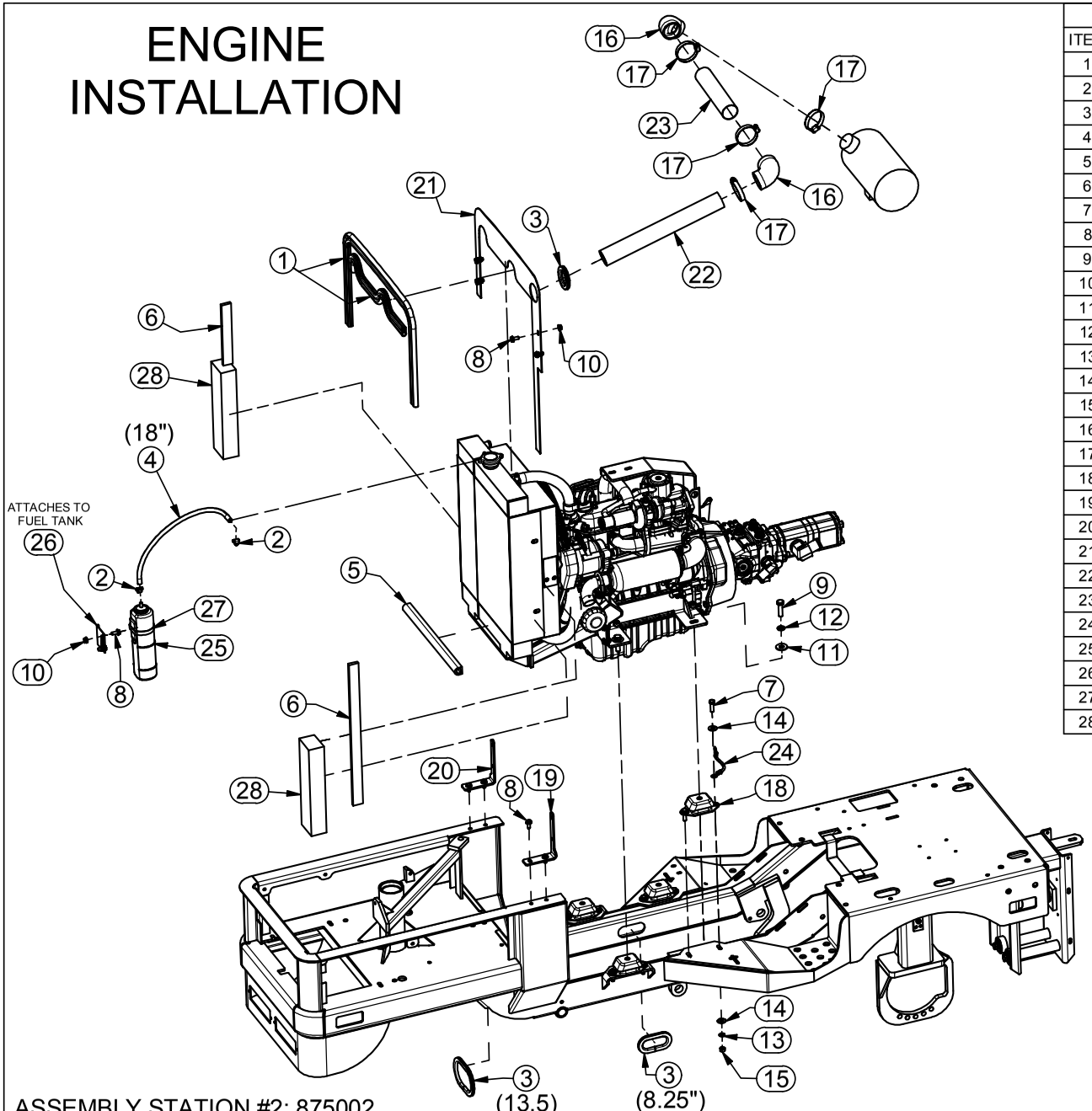

Parts List		
ITEM	PART #	DESCRIPTION
1	100360	Molding, Bulb
2	100361	CLAMP, HOSE #4 .25 MINI
3	100365	Molding, Edge
4	102001	Hose, 5/16, Vacuum Tube
5	102004	D-SEAL, RUBBER 1.00" x 1.00" x 16.25"
6	102088	Foam Tape, 3/8 X 1 1/4
7	110425	BOLT, 3/8-16 X 1.25
8	110444	BOLT, 5/16-18 X 0.75, WIZ FLANGE
9	110577	BOLT, M12x1.75 x 45 Gr 10.9
10	110606	NUT, 5/16-18 WIZ FLANGE
11	110658	WASHER, 1/2" FLAT STANDARD
12	110666	WASHER, 1/2" LOCK
13	110672	WASHER, 3/8" LOCK
14	110676	WASHER, 3/8" FLAT STANDARD
15	110826	NUT, 3/8-16 GR 5
16	342050	Elbow, 2.0" x 2.0" 90 Deg Silicone
17	511003	CLAMP, HOSE #36 2.25"
18	800021	MOTOR MOUNT
19	810763	BRKT, LH HOOD BAFFLE MOUNTING
20	810764	BRKT, RH HOOD BAFFLE MOUNTING
21	810765	BAFFLE, HOOD
22	810827	TUBE, AIR INTAKE
23	810875	TUBE, AIR INTAKE
24	832001	CABLE, GROUND
25	840042	SUBTANK, RESERVOIR
26	840043	SUBTANK BRACKET
27	840044	CLAMP, SUBTANK
28	850115	HOOD FOAM, 2x3x20"

ASSEMBLY STATION #2: 875002

4/26/2019

FUEL TANK INSTALLATION

Parts List		
ITEM	PART #	DESCRIPTION
1	100361	CLAMP, HOSE #4 .25 MINI
2	100708	Hose, 3/16, Low Perm
3	100756	Hose, 5/16 High Pressure Fuel
4	110290	NUT, 1/4-20 WIZ FLANGE
5	110440	BOLT, 3/8-16 X 1, WIZ FLANGE
6	110459	BOLT, 5/16-18 X 1, WIZ FLANGE
7	110468	BOLT, 1/4-20 X 0.75, WIZ FLANGE
8	110606	NUT, 5/16-18 WIZ FLANGE
9	110645	NUT, 3/8-16 WIZ FLANGE
10	110726	CLAMP, ADEL .75WX.5IDx.406 HOLE
11	112053	SCREW, 10-32 X 1/2 MACH SEAL
12	120040	ADAPTER, 4MJ-6MP90
13	120378	ADAPTER, 5HB-6FBX
14	120655	Adapter, 3hb-4fj
15	302057	CANISTER, FUEL FILTER
16	302103	FILTER, FUEL
17	500172	GASKET, FUEL SENDER
18	500209	FITTING, REDUCER 3/8 X 1/4 NPT
19	802019	FUEL CAP
20	802023	VALVE, FUEL SHUT OFF 6MB-4MP
21	802062	PUMP, ELECTRIC FUEL
22	815084	WELDMENT, FUEL TANK
23	832078	SENDER, FUEL LEVEL, 17.0" TANK DEPTH

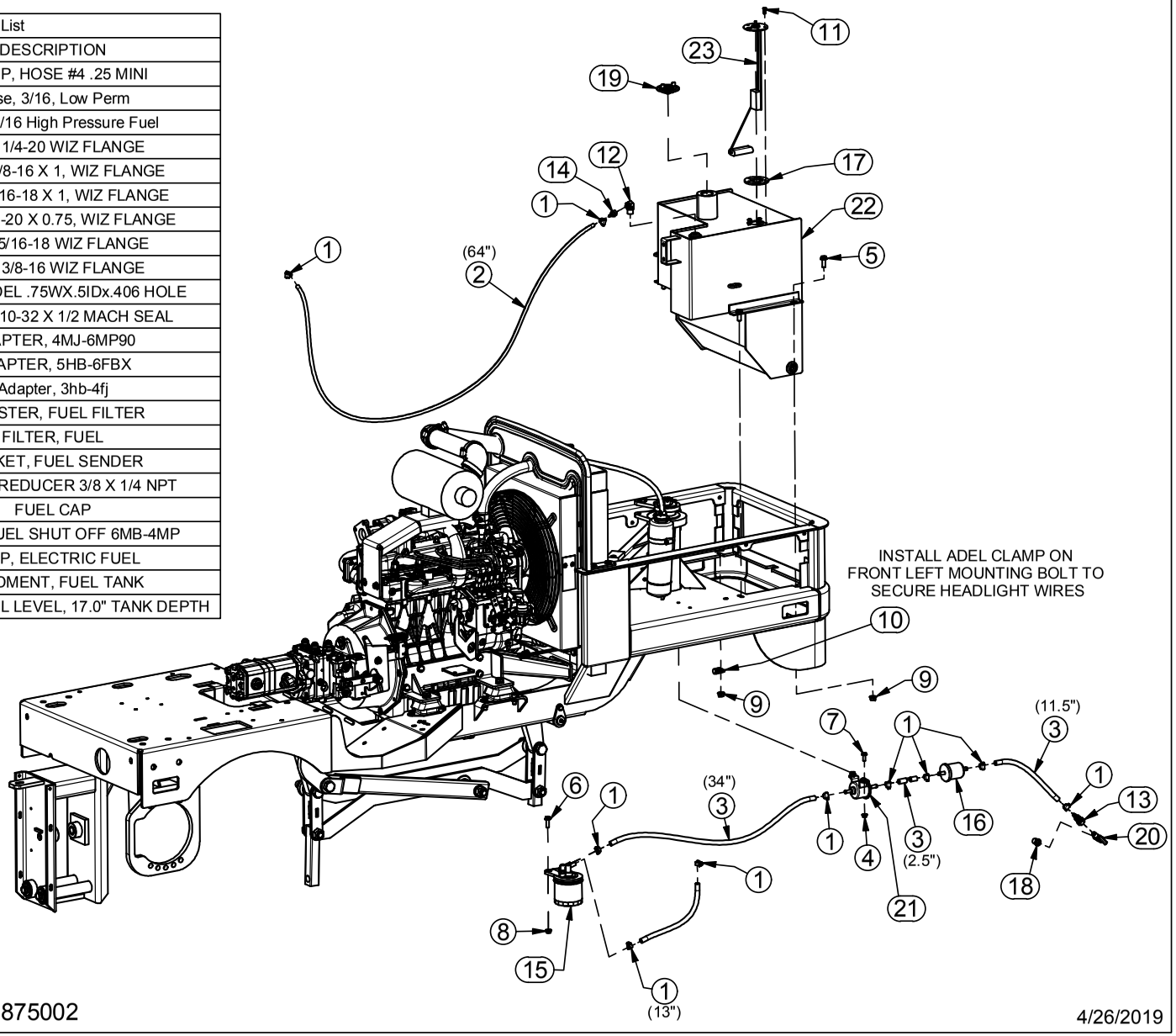

ASSEMBLY STATION #2: 875002

4/26/2019

HARPER TURF EQUIPMENT

STEERING TOWER & FOOT PEDAL INSTALLATION

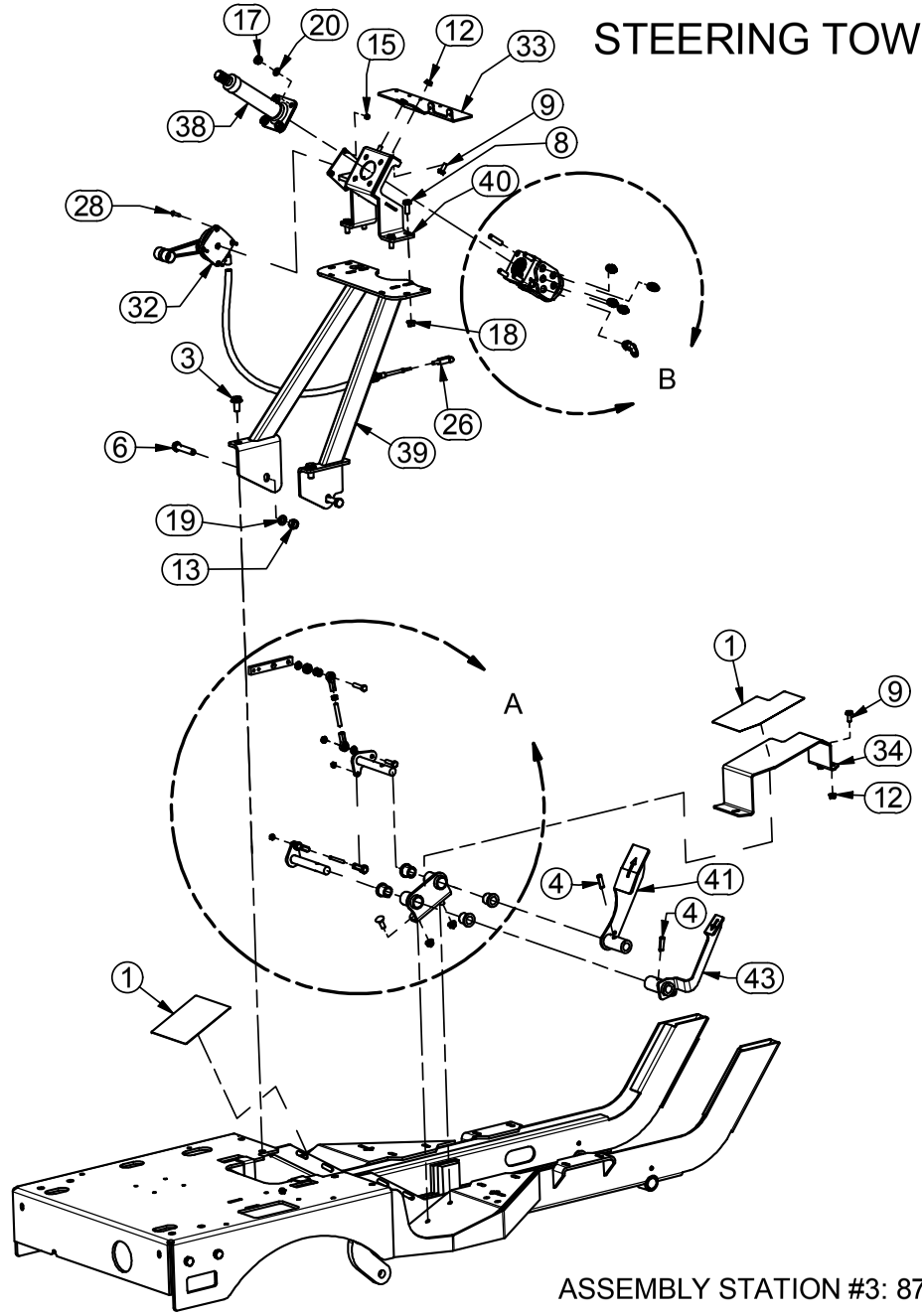

ASSEMBLY STATION #3: 875003

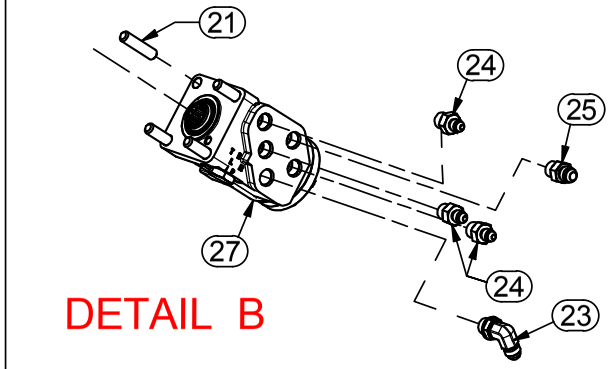

DETAIL B

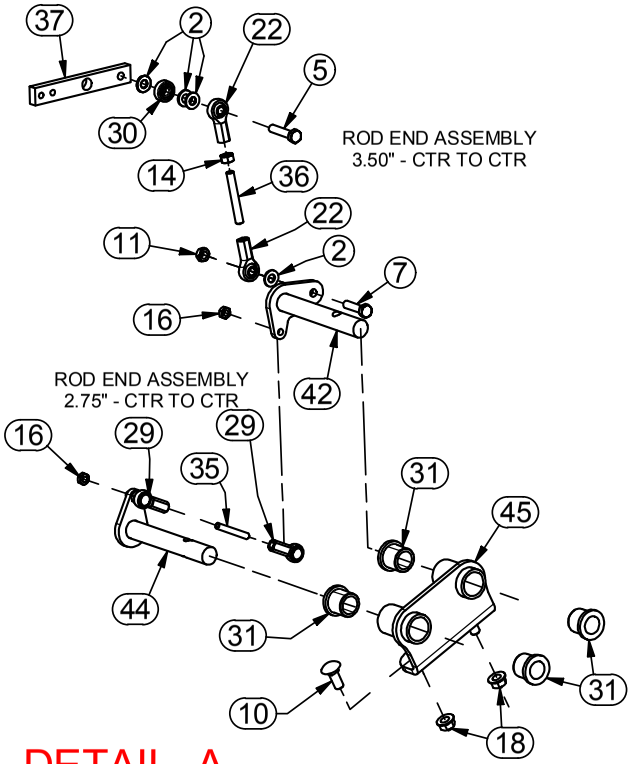

DETAIL A

4/26/2019

STEERING TOWER & FOOT PEDAL INSTALLATION

Parts List			Parts List		
ITEM	PART #	DESCRIPTION	ITEM	PART #	DESCRIPTION
1	100373	TRACTION PAD, FLEX-TREAD, 5.50"	24	120249	ADAPTER, 4MJ-6MB
2	110069	WASHER, 5/16" FLAT SAE	25	120319	ADAPTER, 6MJ-6MB
3	110220	BOLT, 1/2-13 X 1, WIZ FLANGE	26	302017	CLEVIS - THROTTLE
4	110226	ROLL PIN, 3/8 X 1.25	27	323046	MOTOR, STEERING ORBITAL
5	110377	BOLT, 5/16-18 X 1-1/2	28	510094	SCREW, 10-24 X 1, RHMS
6	110403	BOLT, 1/2-13 X 2.5	29	540075	BEARING, ROD END 1/4-28 W/STUD
7	110421	BOLT, 5/16-18 X 1-1/4	30	540079	BEARING, BALL, 1620RS
8	110440	BOLT, 3/8-16 X 1, WIZ FLANGE	31	800128	BUSHING, IGUS, FOOT PEDAL
9	110444	BOLT, 5/16-18 X 0.75, WIZ FLANGE	32	802057	CABLE, THROTTLE
10	110556	Bolt, 3/8-16 X 1 in Carriage	33	810847	BRKT, RELAY & FUSE MOUNTING
11	110600	NUT, 5/16-18, UNITORQUE LOCK	34	810884	SUPPORT, FOOTREST
12	110606	NUT, 5/16-18 WIZ FLANGE	35	810886	LINKAGE, 1/4-28 FOOT PEDAL
13	110610	NUT, 1/2-13	36	810887	LINKAGE, 5/16-24 FOOT PEDAL
14	110623	NUT, 5/16-24	37	810888	BRKT, PUMP LEVER
15	110631	NUT, 10-24 LOCK NYLON INSERT	38	812012	COLUMN, STEERING
16	110632	NUT, 1/4-28, UNITORQUE LOCK	39	815086	WELDMENT, STEERING TOWER
17	110640	Hex Nut M10	40	815087	WELDMENT, STEERING ORBITAL MOUNT
18	110645	NUT, 3/8-16 WIZ FLANGE	41	815091	WELDMENT, FWD FOOT PEDAL
19	110666	WASHER, 1/2" LOCK	42	815092	WELDMENT, FWD FOOT PEDAL PIVOT
20	110689	WASHER, M10, LOCK	43	815093	WELDMENT, REVERSE FOOT PEDAL
21	111055	STUD, M10 X 1.5 X 42 GRADE 8.8	44	815094	WELDMENT, REV FOOT PEDAL PIVOT
22	111150	ROD END, 5/16-24 RH, FEMALE	45	815095	WELDMENT, FOOT PEDAL MOUNT
23	120222	ADAPTER, 6MJ-6MB90			

ASSEMBLY STATION #3: 875003

4/26/2019

CONSOLE ASSEMBLY

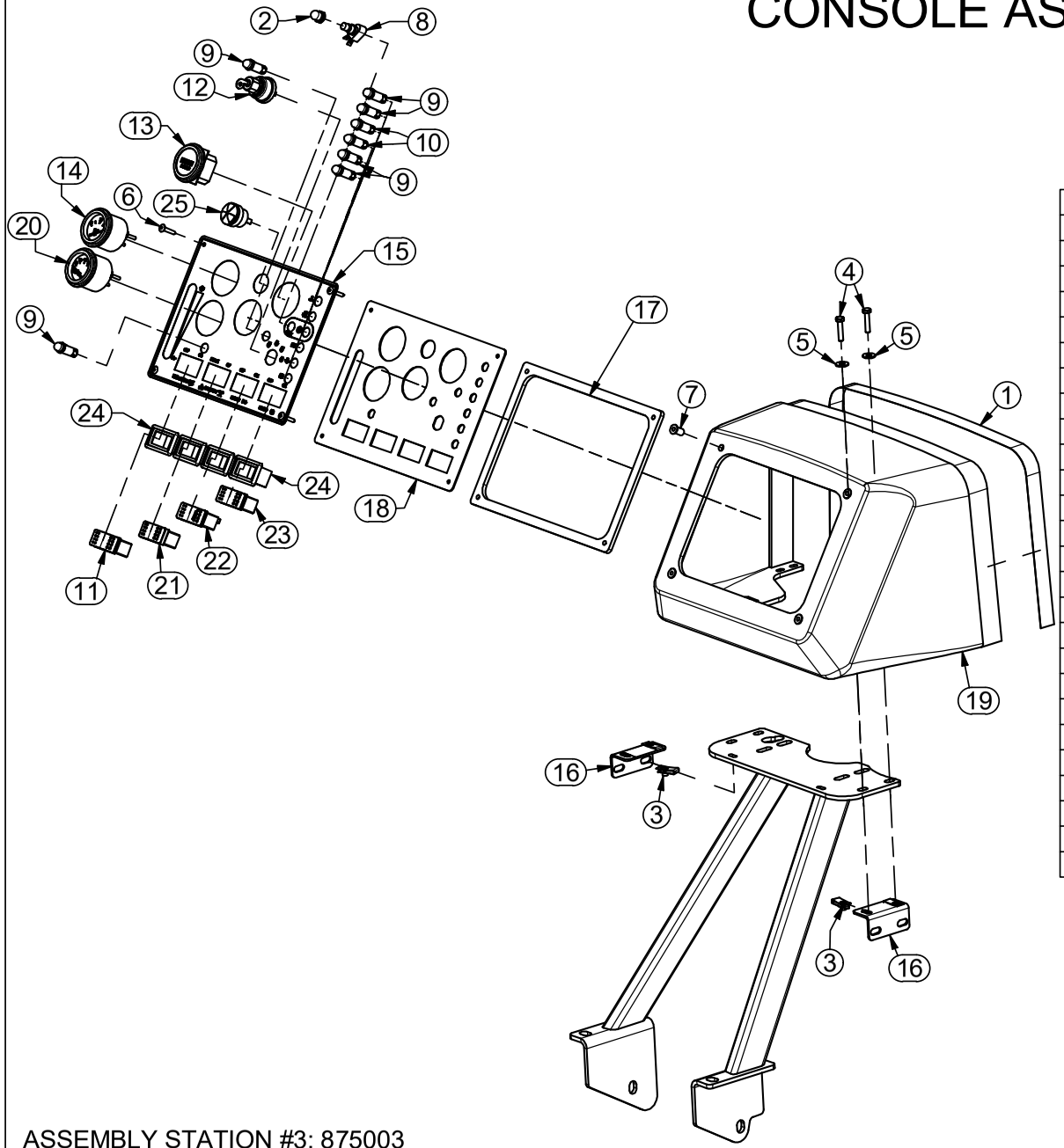

Parts List		
ITEM	PART #	DESCRIPTION
1	102025	Tape, 1.00 X .005 Poly Protective
2	102123	BOOT, PUSHBUTTON SWITCH SEALING
3	110071	1/4-20 U-TYPE TAPPED HOLE
4	110430	BOLT, 1/4-20 X 1-1/4
5	110673	WASHER, 1/4" FLAT STANDARD
6	110751	SCREW, 10-32 X 1 PHILLIPS
7	110752	NUT, 10-32 THREADED INSERT
8	132090	SWITCH, SPST MOMENTARY, N.C.
9	132151	LIGHT, RED INDICATOR
10	132152	LIGHT, AMBER INDICATOR
11	132179	Switch, Paddle, Carling DPDT, 2-Pos
12	332031	SWITCH, IGNITION
13	530009	HOUR METER
14	530065	GAUGE, FUEL
15	802056	DECAL, DASH OVERLAY
16	810604	COWLING BRACKET, SIDE
17	810759	INSTRUMENT PANEL SPACER
18	810830	PANEL, DASH
19	812002	COWLING DASH
20	830008	TEMPERATURE GAUGE
21	832004	SWITCH, PADDLE, CARLING (29261)
22	832005	SWITCH, PADDLE, CARLING (29253)
23	832018	SWITCH, SPDT, ON-ON
24	832024	MOUNT, SWITCH (VMS)
25	832082	ALARM, PANEL MOUNT, CONTINUOUS TONE

ASSEMBLY STATION #3: 875003

5/12/2020

ROPS & STEERING WHEEL INSTALLATION

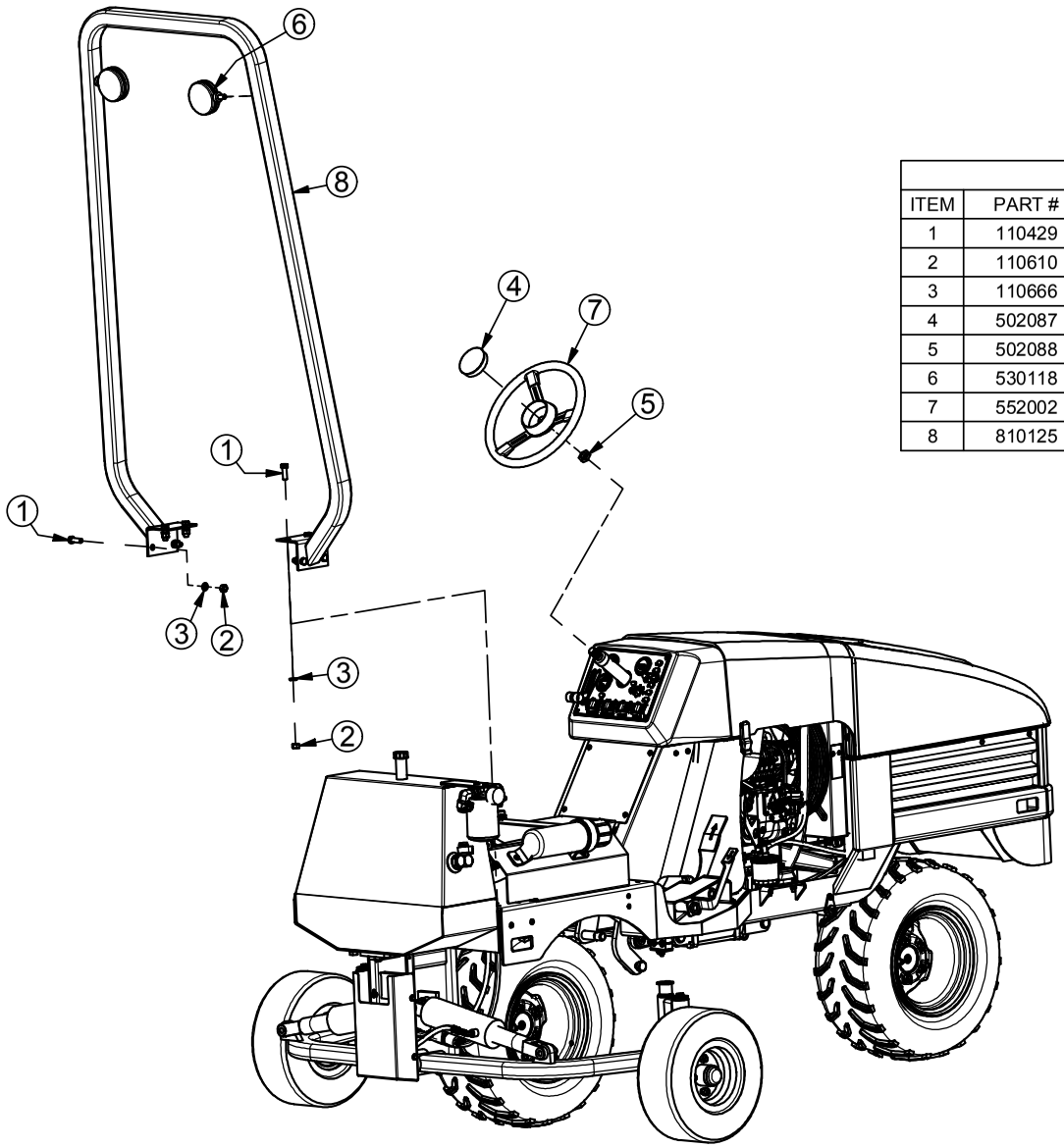

Parts List		
ITEM	PART #	DESCRIPTION
1	110429	BOLT, 1/2-13 X 1.5
2	110610	NUT, 1/2-13
3	110666	WASHER, 1/2" LOCK
4	502087	Cap, Center Steering
5	502088	Nut, Steering Wheel, 13/16-20 UNEF
6	530118	HAZARD LIGHT
7	552002	STEERING WHEEL
8	810125	ROPS, ATM 72

ASSEMBLY STATION #4: 875004

2/25/2019

ELECTRICAL ASSEMBLY

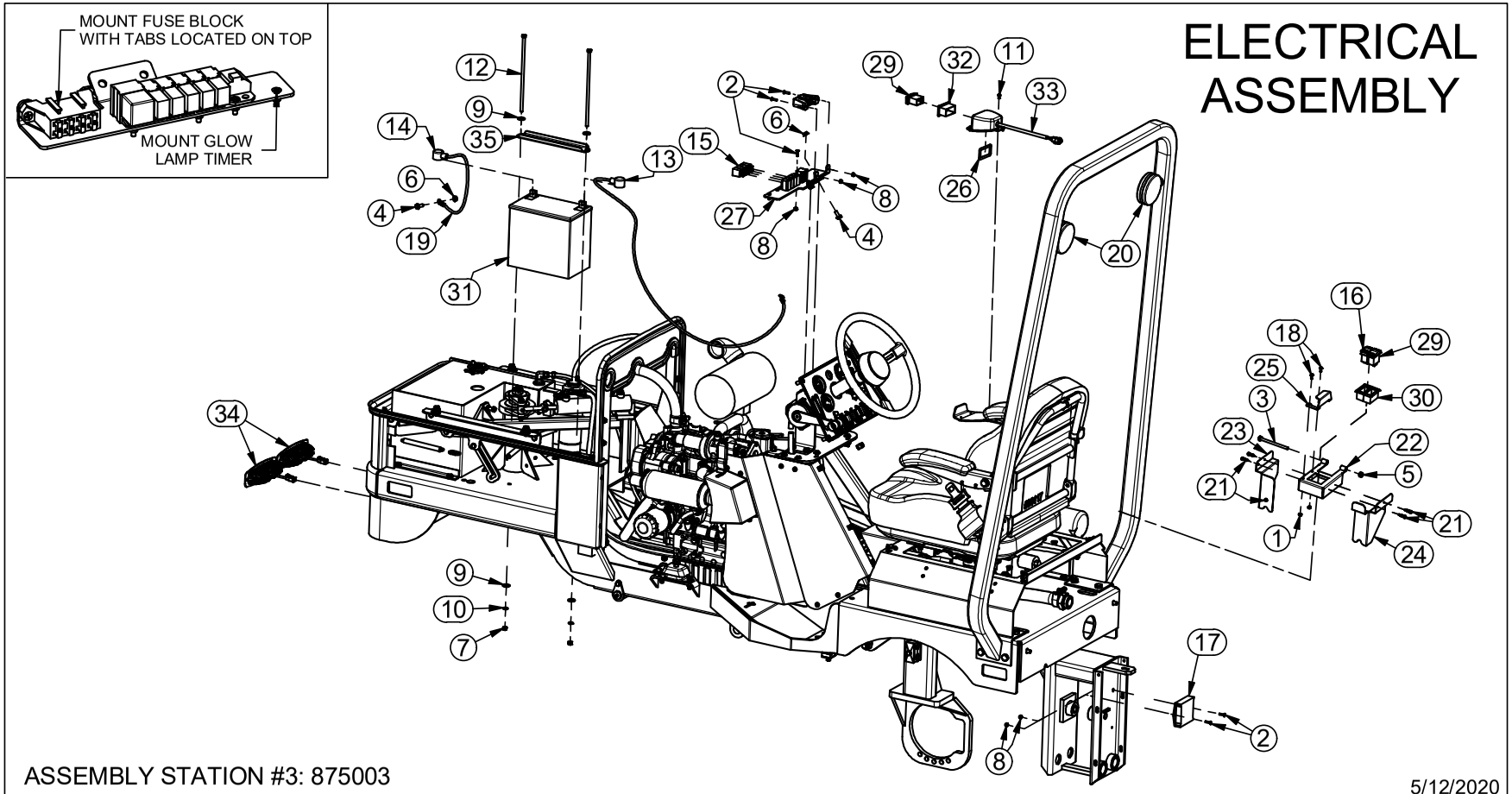

ASSEMBLY STATION #3: 875003

5/12/2020

Parts List			Parts List			Parts List		
ITEM	PART #	DESCRIPTION	ITEM	PART #	DESCRIPTION	ITEM	PART #	DESCRIPTION
1	110119	NUT, 10-24 LOCK	13	132069	BATTERY TERMINAL COVER, POSITIVE	25	810680	SAFETY SWITCH BRACKET
2	110164	SCREW, 10-24 UNCX0.75 Flt Hd Mach	14	132070	BATTERY TERMINAL COVER, NEGATIVE	26	810747	SWITCH SHIM
3	110441	BOLT, 5/16-18 X 4.0	15	132099	Micro Relay	27	810847	BRKT, RELAY & FUSE MOUNTING
4	110444	BOLT, 5/16-18 X 0.75, WIZ FLANGE	16	132179	Switch, Paddle, Carling DPDT, 2-Pos	28	830063	CABLE, POSITIVE BATTERY
5	110603	NUT, 5/16-18 LOCK (NYLON)	17	332036	Inclinometer Switch, Solid-State	29	832004	SWITCH, PADDLE, CARLING (29261)
6	110606	NUT, 5/16-18 WIZ FLANGE	18	510960	SCREW, 10-24 X 0.5, RHMS	30	832007	SWITCH MOUNT, END
7	110608	NUT, 5/16-18	19	530051	GROUND CABLE	31	832011	BATTERY, SEALED GEL W/ L TERMINAL
8	110631	NUT, 10-24 LOCK NYLON INSERT	20	530118	HAZARD LIGHT	32	832024	MOUNT, SWITCH (VMS)
9	110665	WASHER, 5/16" FLAT STANDARD	21	710587	SCREW, 3/16 X .75 TEK SELF-TAP	33	832061	MANUAL OVERRIDE, AUX SW HARNESS
10	110674	WASHER, 5/16" LOCK	22	810611	LEVELING SWITCH BRACKET	34	835027	HEADLIGHT ASSEMBLY, FLUSH MOUNT LED
11	110788	BOLT, 10-24 X .375 STAINLESS, PHILLIPS	23	810665	LEVELING SWITCH GUARD, FRONT	35	970876	BRKT, BATTERY HOLD DOWN
12	111187	BOLT, 5/16-18 X 10.0, Zinc	24	810666	LEVELING SWITCH GUARD, BACK			

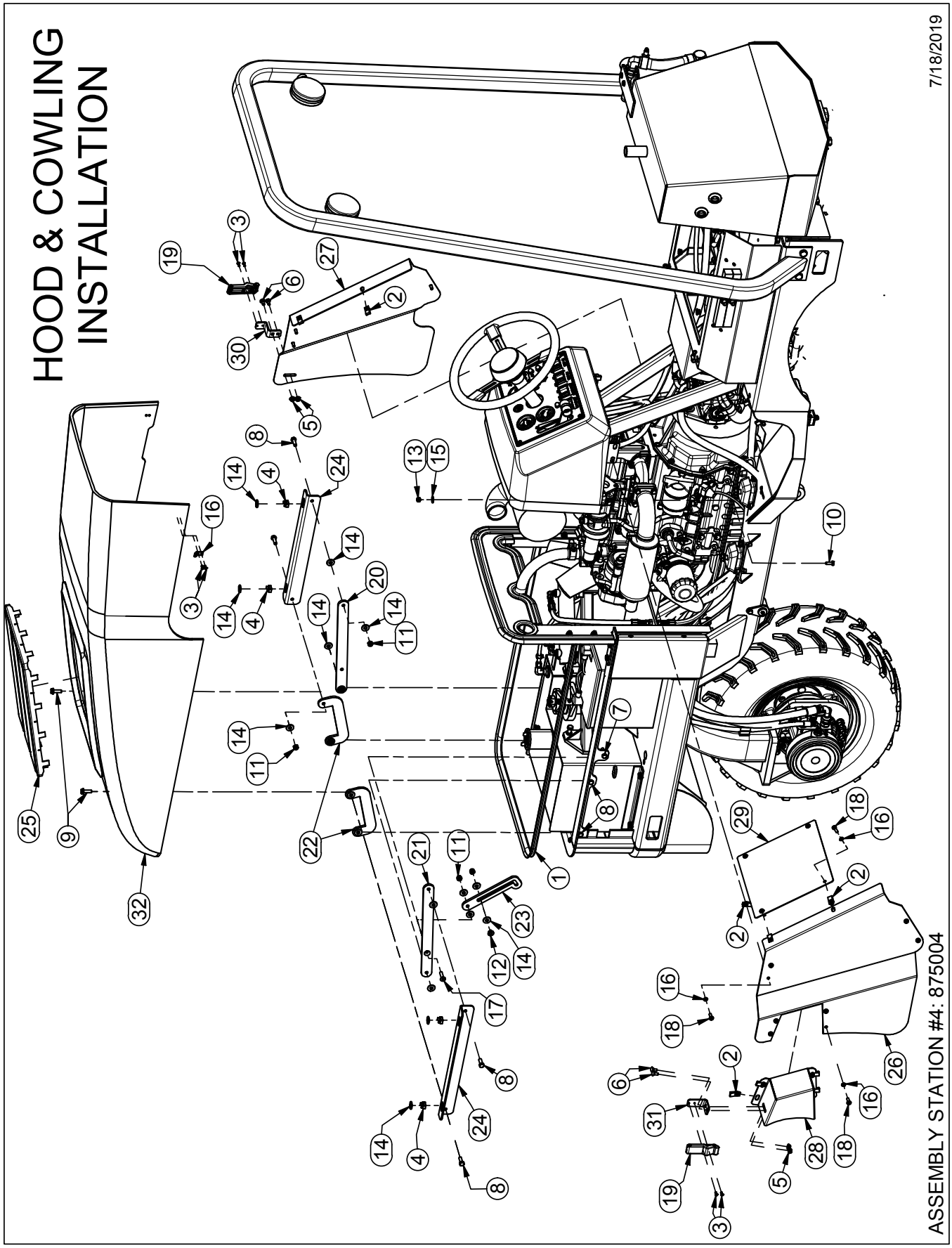
HOOD & COWLING
INSTALLATION
7/18/2019
ASSEMBLY STATION #4: 875004

HOOD & COWLING INSTALLATION

Parts List		
ITEM	PART #	DESCRIPTION
1	102127	Seal, Rubber "D", .70 x .50 w/ .30 Flap
2	110071	1/4-20 U-TYPE TAPPED HOLE
3	110102	RIVET, POP, 5/32 X .378
4	110258	NUT, 5/16-18, CAGE TINNERMAN
5	110290	NUT, 1/4-20 WIZ FLANGE
6	110358	Bolt, 1/4-20 X 0.625 in Carriage
7	110421	BOLT, 5/16-18 X 1-1/4
8	110423	BOLT, 5/16-18 X 1.0
9	110459	BOLT, 5/16-18 X 1, WIZ FLANGE
10	110561	BOLT, 1/4-20 X .75
11	110603	NUT, 5/16-18 LOCK (NYLON)
12	110606	NUT, 5/16-18 WIZ FLANGE
13	110630	NUT, 1/4-20 LOCK (NYLON INSERT)
14	110665	WASHER, 5/16" FLAT STANDARD
15	110673	WASHER, 1/4" FLAT STANDARD
16	110698	WASHER, 1/4 NYLON
17	110730	BOLT, 5/16-18 X 1.25 82° FLATHEAD
18	110772	SCREW, 1/4-20 X 1 SS PHILLIPS PAN HEAD
19	500099	LATCH
20	810568	HOOD LIFT ARM, REAR
21	810569	HOOD LIFT ARM, REAR LEFT
22	810570	HOOD LIFT ARM, FRONT
23	810571	SAFETY CATCH
24	810572	HOOD LIFT BRACKET
25	810625	TOP SCREEN
26	810819	COWLING, LEFT
27	810820	COWLING, RIGHT
28	810821	COWLING, EXHAUST
29	810874	COWLING, CENTER
30	810917	Bracket, Hood Mount, Right
31	810918	Bracket, Hood Mount, Left
32	812004	HOOD, DEWEZE RED

ASSEMBLY STATION #4: 875004

7/18/2019

TOOLBOX ASSEMBLY - 805017

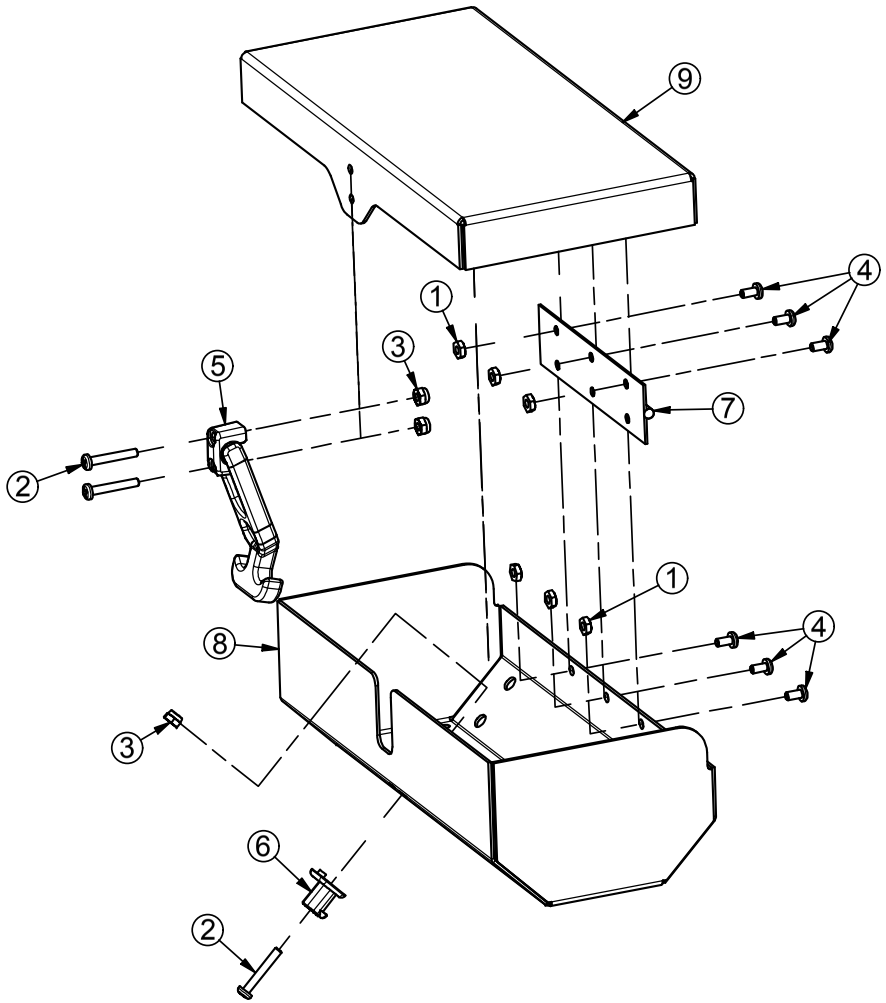

Parts List			Parts List		
ITEM	PART #	DESCRIPTION	ITEM	PART #	DESCRIPTION
1	110119	NUT, 10-24 LOCK	6	112106	Keeper, Draw Latch
2	110339	SCREW, 10-24X1.25 PAN HEAD PHPS	7	311729	HINGE, 6" ALUMINUM W/ HOLES
3	110631	NUT, 10-24 LOCK NYLON INSERT	8	810911	BASE, TOOLBOX
4	110788	BOLT, 10-24 X .375 STAINLESS, PHILLIPS	9	810912	LID, TOOLBOX
5	112105	LATCH, RUBBER T-HANDLE DRAW			

DECK LIFT ASSIST TOOL - 805016

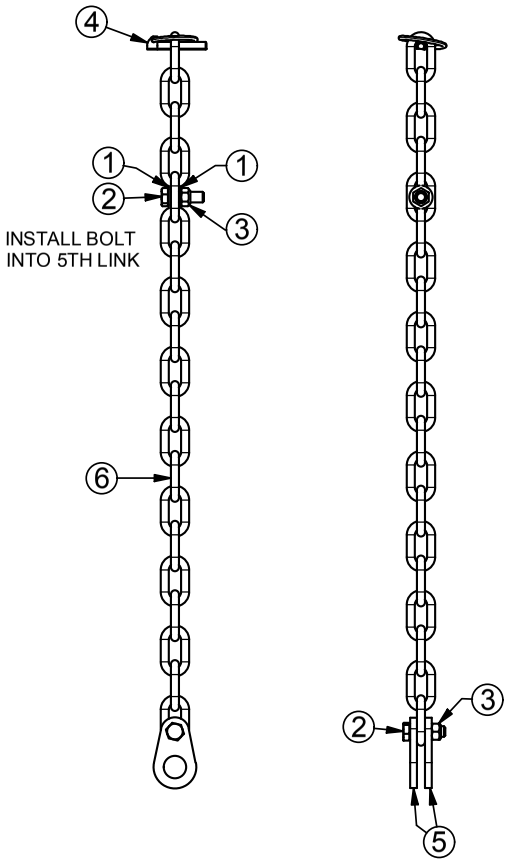

Parts List		
ITEM	PART #	DESCRIPTION
1	110155	WASHER, 3/8" FLAT SAE
2	110425	BOLT, 3/8-16 X 1.25
3	110621	NUT, 3/8-16, UNITORQUE LOCK
4	411287	Pin, Lynch 5/16 x 1 3/4
5	810889	BRKT, DECK LIFT
6	970304	CHAIN, 1/4 COIL

2/26/2019

SEAT & SCREENS INSTALLATION

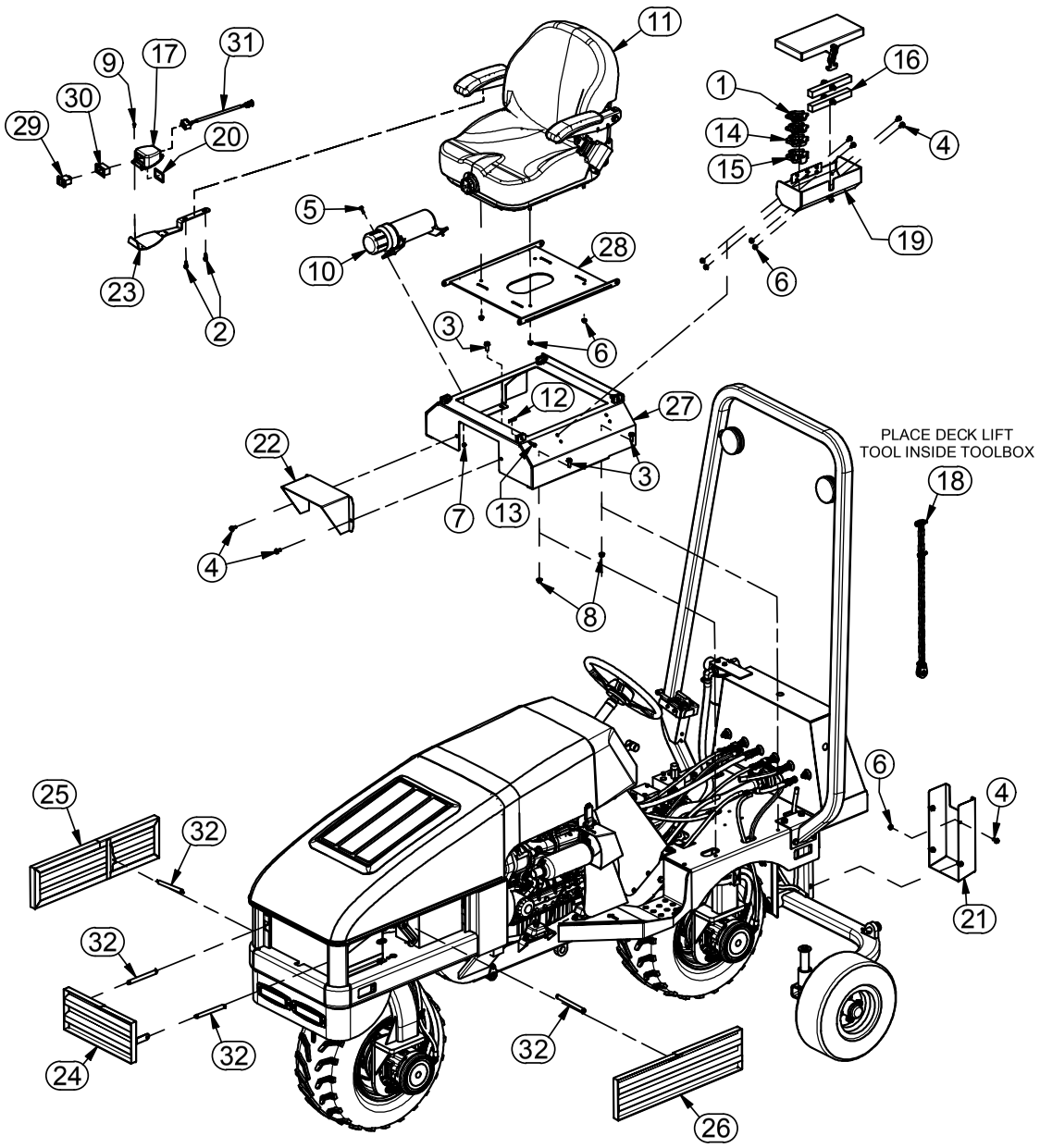

Parts List		
ITEM	PART #	DESCRIPTION
1	102077	CYLINDER STOP, 1/4" THICK
2	110199	SCREW, 1/4-20 X .75, WH SELF TAP
3	110440	BOLT, 3/8-16 X 1, WIZ FLANGE
4	110444	BOLT, 5/16-18 X 0.75, WIZ FLANGE
5	110468	BOLT, 1/4-20 X 0.75, WIZ FLANGE
6	110606	NUT, 5/16-18 WIZ FLANGE
7	110630	NUT, 1/4-20 LOCK (NYLON INSERT)
8	110645	NUT, 3/8-16 WIZ FLANGE
9	110788	BOLT, 10-24 X .375 STAINLESS, PHILLIPS
10	152004	HOLDER, MANUAL
11	302078	SEAT, I3M SUSPENSION
12	312022	CLIP, HAIRPIN 3/32 x 1.625
13	550048	CLEVIS PIN, 5/16"
14	572003	CYLINDER STOP, 1/2" THICK
15	572005	CYLINDER STOP, 1" THICK
16	575064	TOOL, BRAKE RELEASE
17	802035	BOX, PLASTIC, MANUAL OVERRIDE
18	805016	TOOL, DECK LIFT ASSIST
19	805017	ASSEMBLY, TOOLBOX
20	810747	SWITCH SHIM
21	810811	BIN, REAR STORAGE
22	810812	COWLING, LOWER
23	810818	MOUNT, ARM REST SWITCH
24	815022	GRILL, FRONT
25	815023	GRILL, SIDE RIGHT
26	815045	GRILL, SIDE LEFT
27	815079	WELDMENT, SEAT BASE
28	815088	WELDMENT, SEAT MOUNT
29	832004	SWITCH, PADDLE, CARLING (29261)
30	832024	MOUNT, SWITCH (VMS)
31	832061	MANUAL OVERRIDE, AUX SW HARNESS
32	942055	SPRING

ASSEMBLY STATION #4: 875004

7/18/2019

WHEEL & TIRE INSTALLATION

Parts List		
ITEM	PART #	DESCRIPTION
1	110617	LUGNUT, 1/2-20 GR 5
2	800057	FILLED STABILIZER TIRE ASSEMBLY
3	843007	TIRE & WHEEL ASSY, 72LC

843007 - Service Parts	
PART #	DESCRIPTION
842019	WHEEL, 12 X 8.50
842020	TIRE, 25x11-12 440 MAG

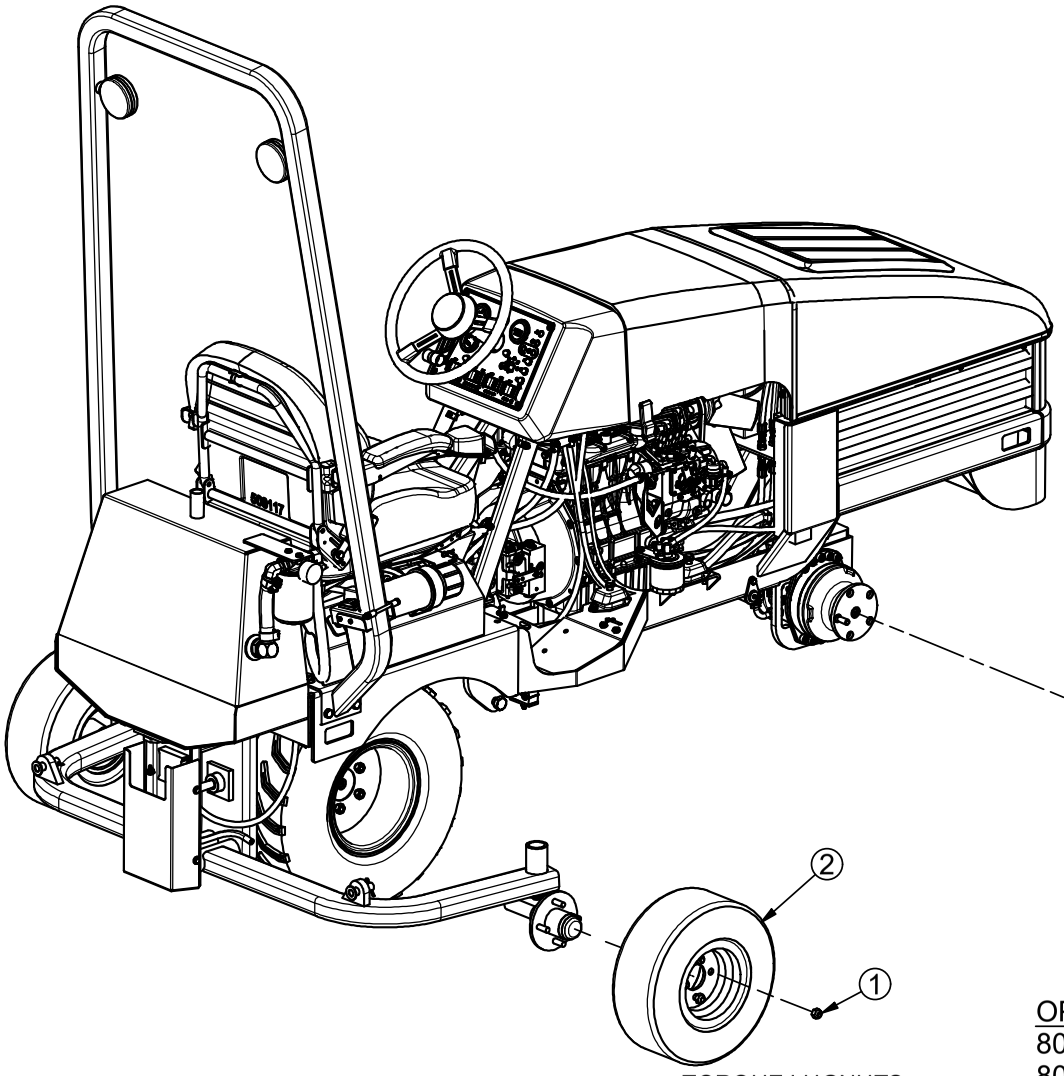

OPTIONAL WHEEL WEIGHT KIT
801004 - CUSTOMER INSTALL
801005 - FACTORY INSTALL

ASSEMBLY STATION #4: 875004

6/5/2020

DECK ASSEMBLY

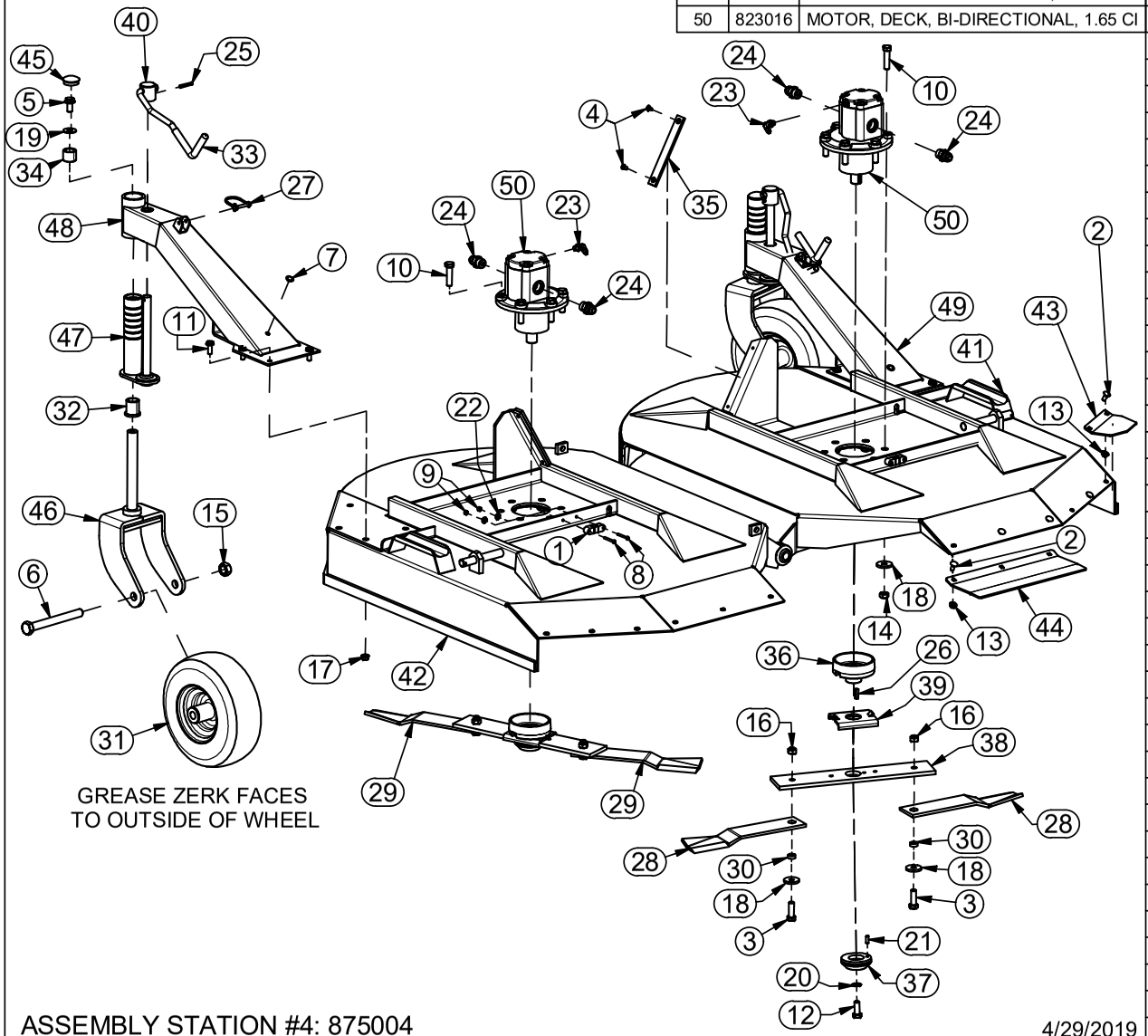

Parts List		
ITEM	PART #	DESCRIPTION
45	812001	DUST CAP
46	815002	CASTER YOKE WELD ASSY
47	815003	ADJUSTMENT SCREW WELD ASSY
48	815005	CASTER ARM WELD ASSY, LEFT
49	815006	CASTER ARM WELD ASSY, RIGHT
50	823016	MOTOR, DECK, BI-DIRECTIONAL, 1.65 CI

Parts List		
ITEM	PART #	DESCRIPTION
1	102119	LEVEL, SURFACE MOUNT
2	110020	Bolt, 5/16-18 X 0.75 in Carriage
3	110051	BOLT, 1/2-20 X 1.5, GR8
4	110067	SCREW, 1/4-20 X .50 SLOT FLAT-HD
5	110220	BOLT, 1/2-13 X 1, WIZ FLANGE
6	110272	BOLT, 3/4-10 X 6.75, HHCS
7	110283	PLUG, 7/16", NYLON, SNAP LOCK
8	110344	SCREW, 8-32X1.5 PAN HEAD PHPS
9	110345	NUT, 8-32 LOCK NYLON
10	110379	BOLT, 1/2-13 X 2.0
11	110440	BOLT, 3/8-16 X 1, WIZ FLANGE
12	110442	BOLT, 1/2-13 X 1.25
13	110606	NUT, 5/16-18 WIZ FLANGE
14	110615	NUT, 1/2-13, UNITORQUE LOCK
15	110625	NUT, 3/4-10, UNITORQUE LOCK
16	110635	NUT, 1/2-20, UNITORQUE LOCK
17	110645	NUT, 3/8-16 WIZ FLANGE
18	110660	WASHER, 1/2 FLAT SPECIAL 1.5 OD
19	110670	WASHER, 7/16" FLAT STANDARD
20	110681	WASHER, 1/2 EXT. TOOTH LOCK
21	110700	ROLL PIN, 1/4 X 0.75
22	111013	WASHER, M5 FLAT STAINLESS
23	120235	ADAPTER, 4MJ-4MB90
24	120251	ADAPTER, 10MJ-10MB
25	200028	ROLL PIN, 1/4 X 1.5
26	510228	KEY, 1/4 X 1/4 X 1.0 in
27	510962	PIN, WIRE LOCK
28	511134	BLADE, RIGHT
29	511135	BLADE, LEFT
30	511136	BUSHING, BLADE MOUNT
31	800093	CASTER WHEEL ASSY
32	800124	BUSHING, MFI-1620-24
33	802001	COVER, VINYL, 1/2 RND X 6.0
34	802004	BUSHING, MSI-1620-16
35	810278	PLASTIC BUMPER, MOTOR GUARD
36	810358	HUB, BLADE MOUNT MACHINED
37	810360	WASHER, BLADE MOUNT
38	810361	BLADE MOUNT
39	810364	BLADE SADDLE
40	810393	CRANK PIVOT
41	810404	DECK WELDMENT, RIGHT
42	810405	DECK WELDMENT, LEFT
43	810919	SHIELD, OUTER FOOT
44	810920	SHIELD, REAR FOOT

ASSEMBLY STATION #4: 875004

4/29/2019

DECK INSTALLATION

Parts List		
ITEM	PART #	DESCRIPTION
1	100449	TRACTION PAD, FLEX-TREAD 2.75" x 1.0'
2	110052	WASHER, 1.875 X .563 X .125, FLAT SPECIAL
3	110068	WASHER, 1.25 OD X .75 ID X .075
4	110070	BOLT, 3/4-10 X 5.0
5	110220	BOLT, 1/2-13 X 1, WIZ FLANGE
6	110444	BOLT, 5/16-18 X 0.75, WIZ FLANGE
7	110625	NUT, 3/4-10, UNITORQUE LOCK
8	110678	WASHER, 3/4" FLAT SAE
9	110891	NUT, 3/4-16 JAM LH
10	110892	NUT, JAM 3/4-16 UNF RH
11	111159	JACK SCREW, 3/4-16 X 4.0
12	500156	Pin, Hairpin Cotter, 1/8 X 2.375
13	510174	GREASE ZERK, 1/4-28 ST
14	510175	COTTER PIN, 3/16 X 2
15	510176	COTTER PIN, 1/8 X 1
16	510403	ROLL PIN, 3/16 X 0.75
17	510962	PIN, WIRE LOCK
18	800026	BUSHING, 1.25 X 1.0 X .75 SPLIT STEEL
19	800129	BUSHING, IGUS MFI-2024-24
20	810130	EQUALIZER ARM ASSY
21	810238	PIN ASSY, EQUILIZER ARM MOUNT
22	810477	HOLD DOWN ROD, CENTER DECK COVER
23	810489	PLASTIC DECK COVER
24	810610	VERTICAL SHAFT
25	810802	BUSHING, 1.25 X .75 X .75
26	810843	LINK, LH THREAD ADJUSTABLE
27	810916	HANDLE, HEIGHT ADJUSTMENT
28	815027	OUTER DECK ARM WELDMENT, W/O STEP
29	815028	OUTER DECK ARM WELDMENT, W/TREAD-GRIP STEP
30	815042	SLIDE ASSY SHORT, OUTER DECK ADJ
31	815107	WELDMENT, DECK ADJUSTMENT

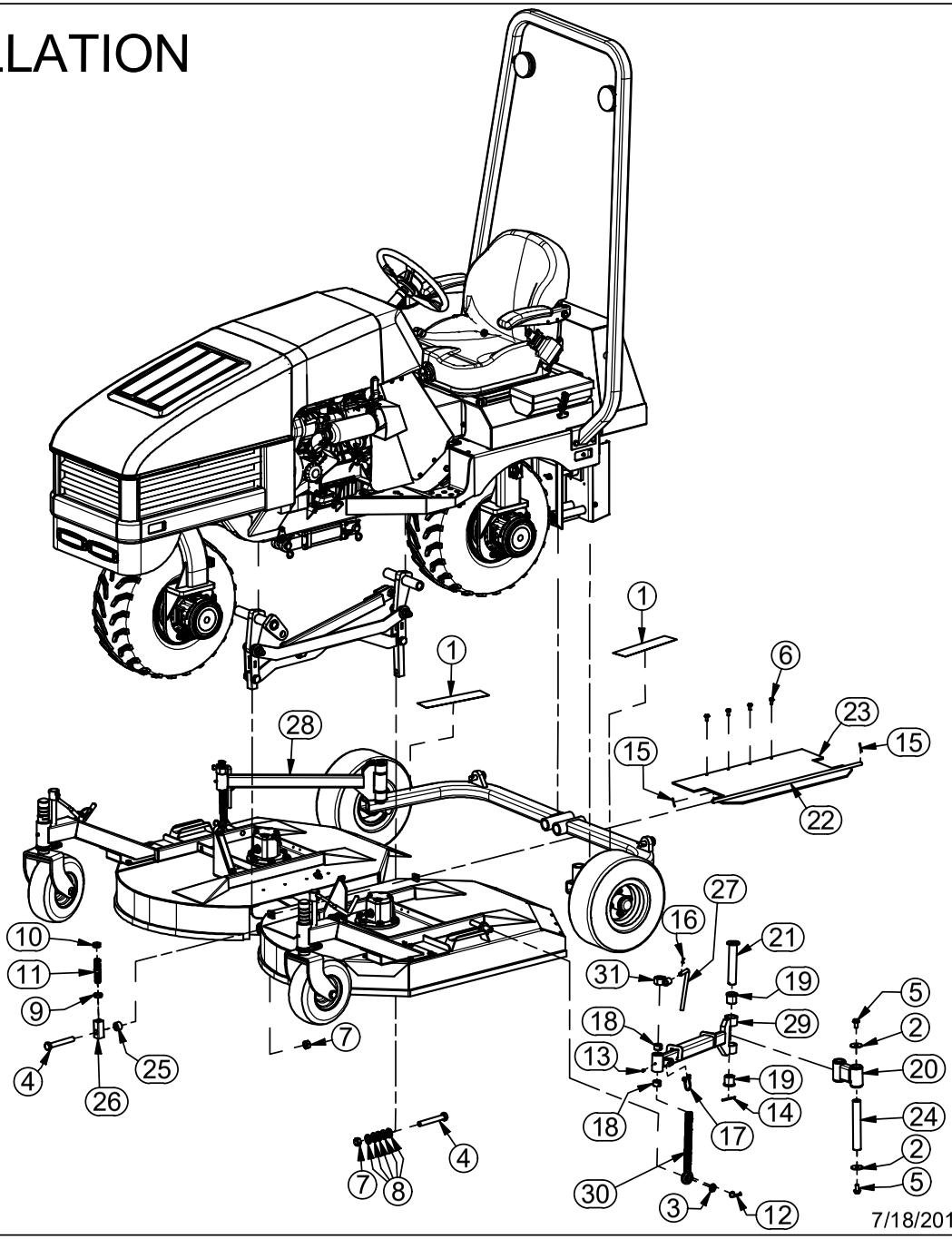

ASSEMBLY STATION #4: 875004

7/18/2019

DECAL LAYOUT - TOP VIEW

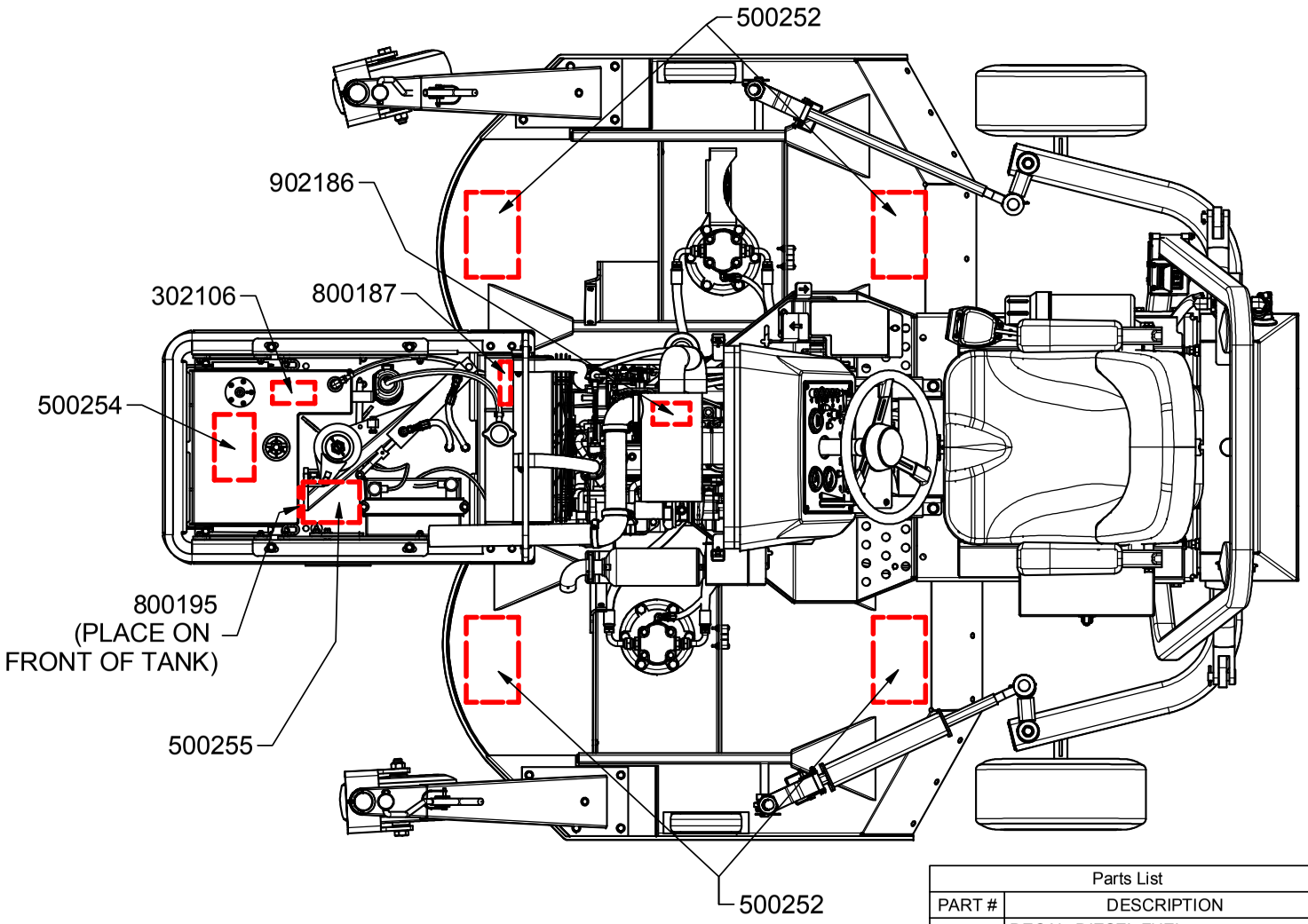

Parts List	
PART #	DESCRIPTION
302106	DECAL, DIESEL FUEL
500252	DECAL, DANGER, ROTATING BLADES
500254	DECAL, FUEL
500255	DECAL, BATTERY
800187	DECAL, SERVICE RADIATOR
800195	DECAL, RECYCLE BATTERY
902186	DECAL, EPA STANDARDS

ASSEMBLY STATION #4: 875004

3/4/2019

DECAL LAYOUT - RH SIDE

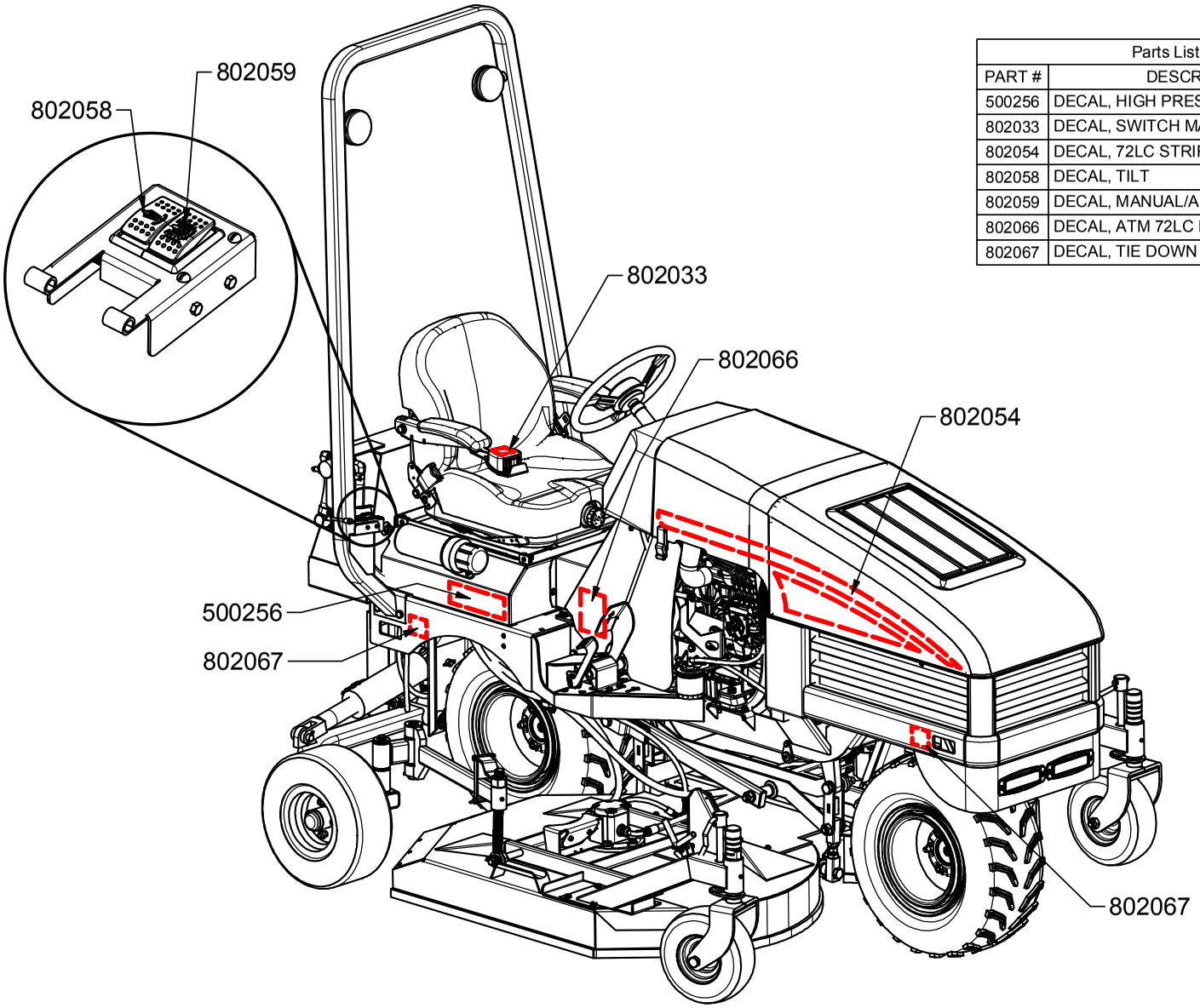

Parts List	
PART #	DESCRIPTION
500256	DECAL, HIGH PRESSURE OIL
802033	DECAL, SWITCH MANUAL LEVEL CTL
802054	DECAL, 72LC STRIPE, RIGHT
802058	DECAL, TILT
802059	DECAL, MANUAL/AUTO LEVEL
802066	DECAL, ATM 72LC LOGO, SILVER
802067	DECAL, TIE DOWN POINT

ASSEMBLY STATION #4: 875004

3/4/2019

DECAL LAYOUT - LH SIDE

Parts List	
PART #	DESCRIPTION
202133	DECAL, PROP 65, BREATHING DIESEL EXHAUST
500079	DECAL, SLOW MOVING VEHICLE
500253	DECAL, READ OPERATOR'S MANUAL
500256	DECAL, HIGH PRESSURE OIL
500257	DECAL, HOT MUFFLER
800186	DECAL, OPERATING ON SLOPES
802053	DECAL, 72LC STRIPE, LEFT
802066	DECAL, ATM 72LC LOGO, SILVER
802067	DECAL, TIE DOWN POINT
802068	DECAL, CUT HEIGHT
902204	DECAL, ISO 46 HYDRAULIC OIL

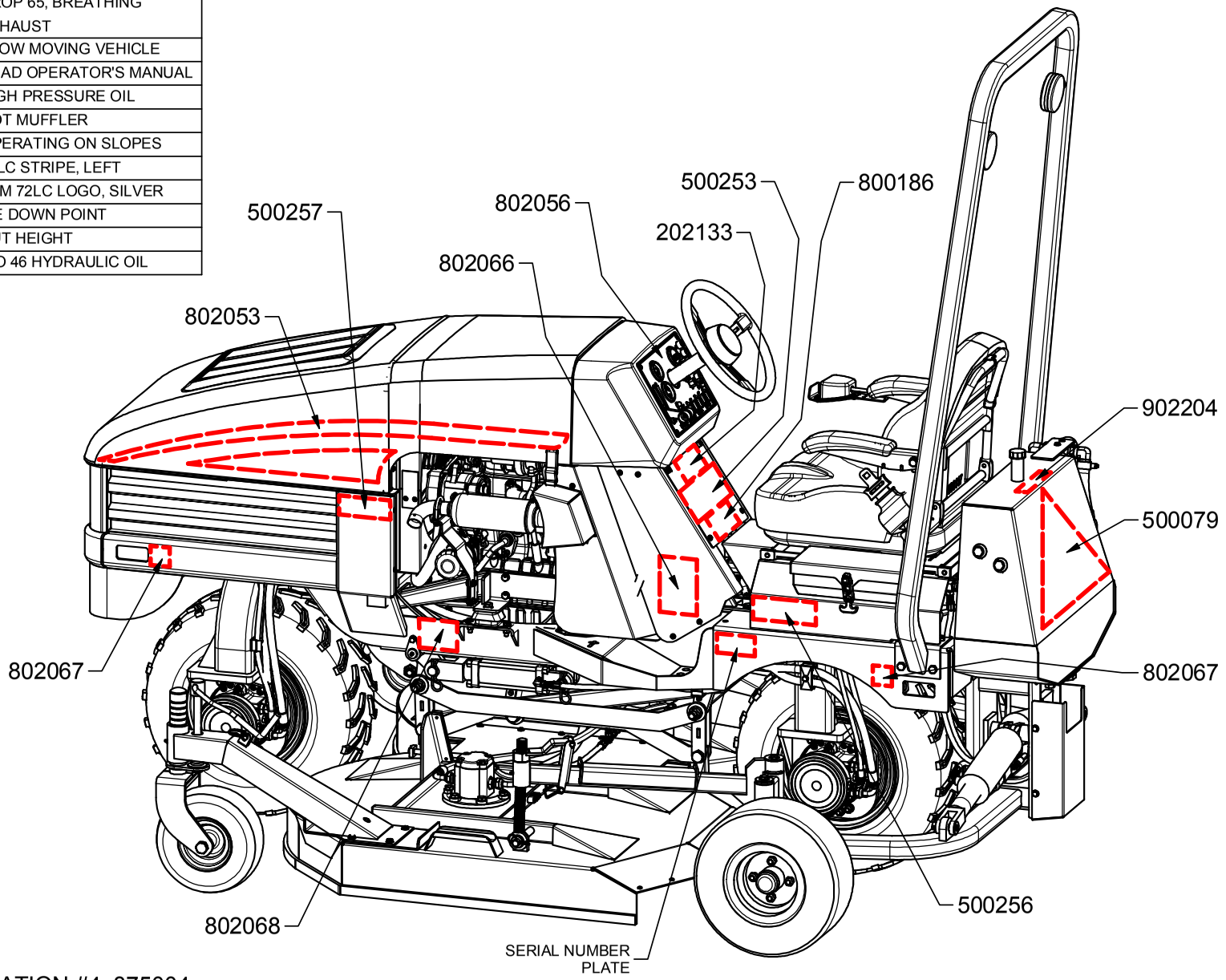

ASSEMBLY STATION #4: 875004

3/4/2019

Hydraulic Systems

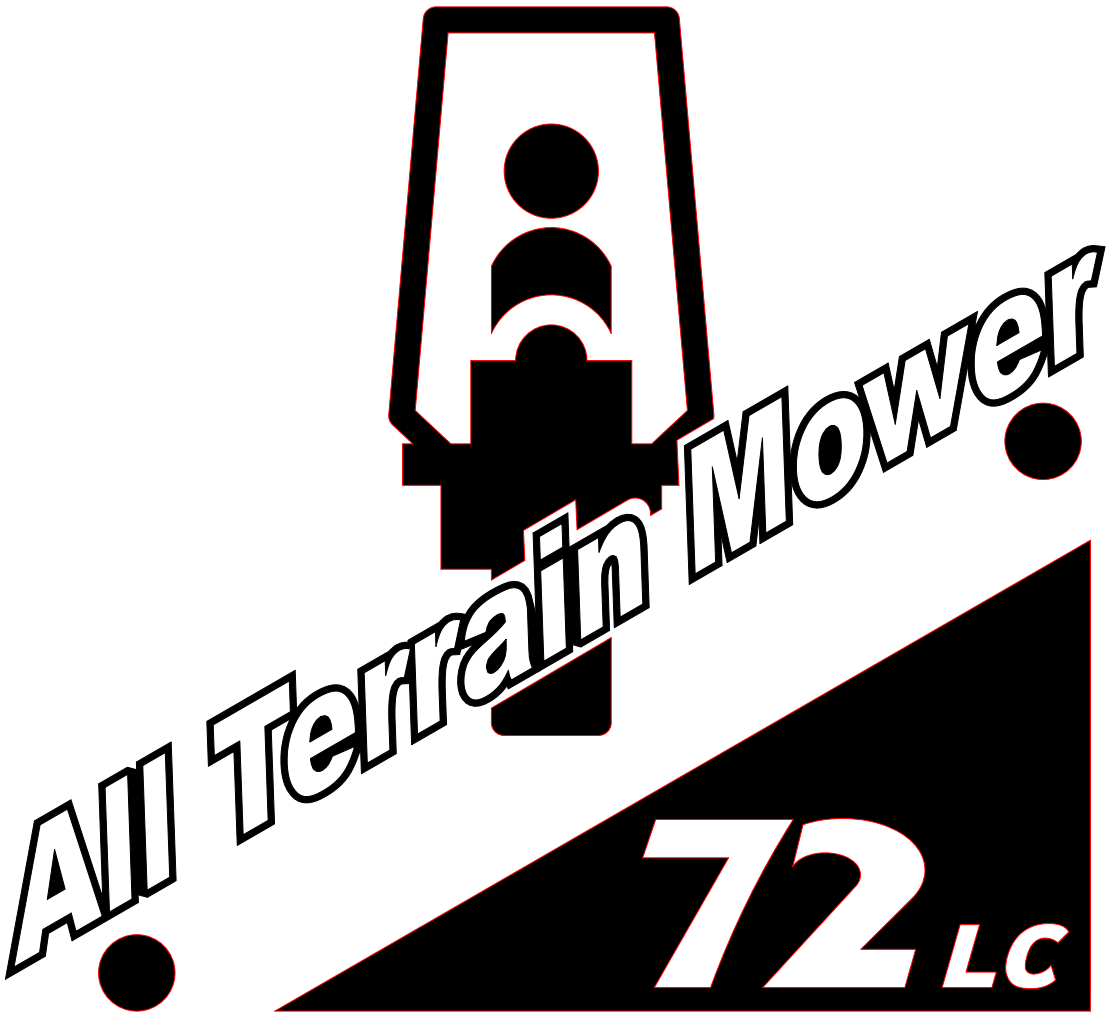

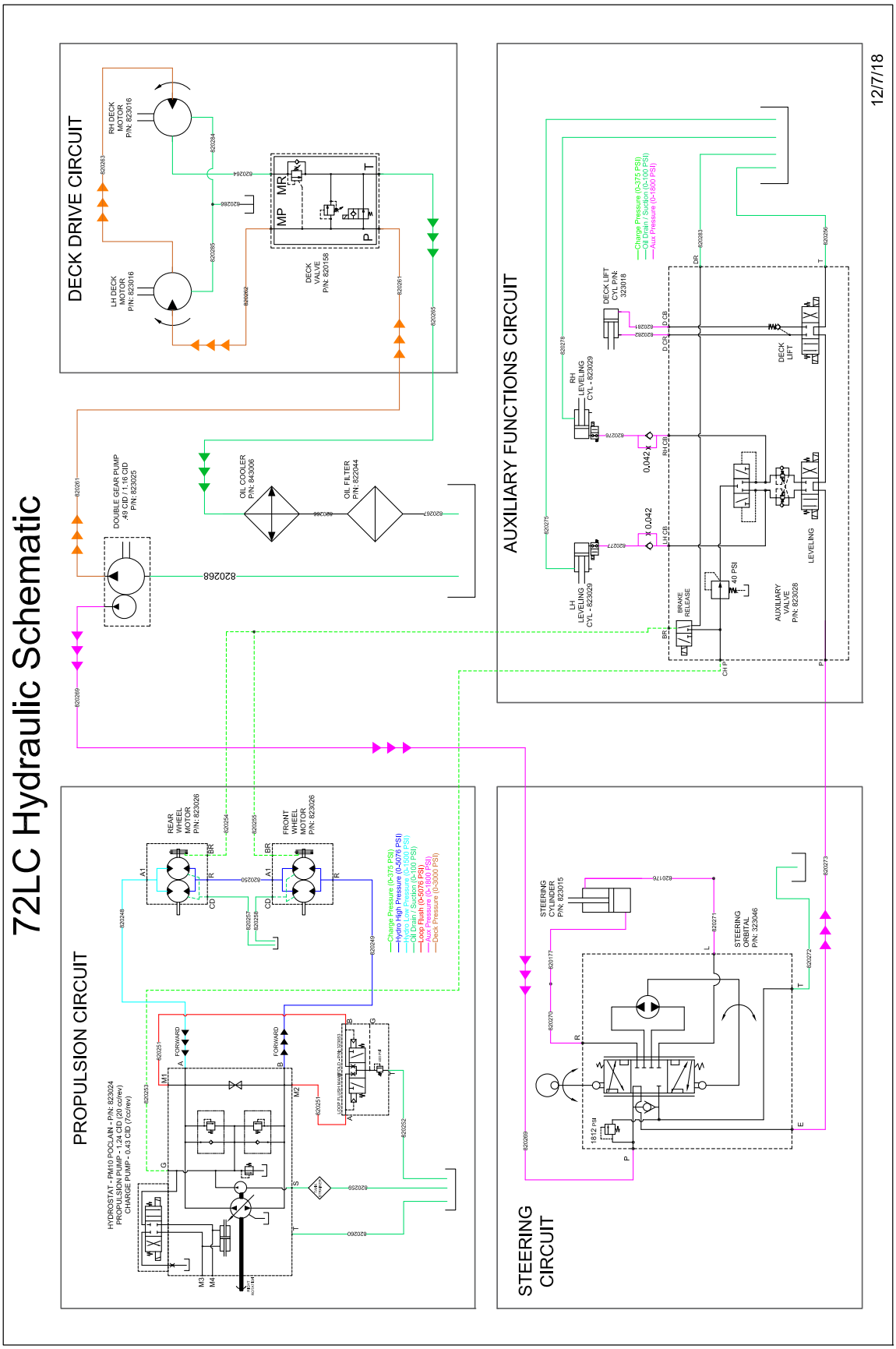
72LC Hydraulic Schematic
12/7/18
DECK DRIVE CIRCUIT
RH DECK MOTOR P/N: 823016
LH DECK MOTOR P/N: 823016
DECK VALVE P/N: 820158
MP
MR
P
T
DOUBLE GEAR PUMP .49 CID / 1.16 CID P/N: 823025
OIL COOLER P/N: 843006
OIL FILTER P/N: 822044
820268
AUXILIARY FUNCTIONS CIRCUIT
DECK LIFT CYL P/N: 3230016
RH LEVELING CYL - 823029
LH LEVELING CYL - 823029
DECK LIFT
LEVELING
BRAKE RELEASE
40 PSI
AUXILIARY VALVE P/N: 823028
0.042
PROPULSION CIRCUIT
REAR WHEEL MOTOR P/N: 823026
FRONT WHEEL MOTOR P/N: 823026
HYDROSTAT - PM10 POCLAIN - P/N: 823024
PROPULSION PUMP - 1.24 CID (20 cc/rev)
CHARGE PUMP - 0.43 CID (7cc/rev)
FORWARD
Charge Pressure (0-375 PSI)
Hydro High Pressure (0-5076 PSI)
Hydro Low Pressure (0-1015 PSI)
Oil Drain Suction (0-145 PSI)
Loop Flush (0-5076 PSI)
Aux Pressure (0-1800 PSI)
Back Pressure (0-5000 PSI)
STEERING CIRCUIT
STEERING CYLINDER P/N: 823015
STEERING ORBITAL P/N: 323046
1812 PSI

HYDRAULIC TANK ASSEMBLY

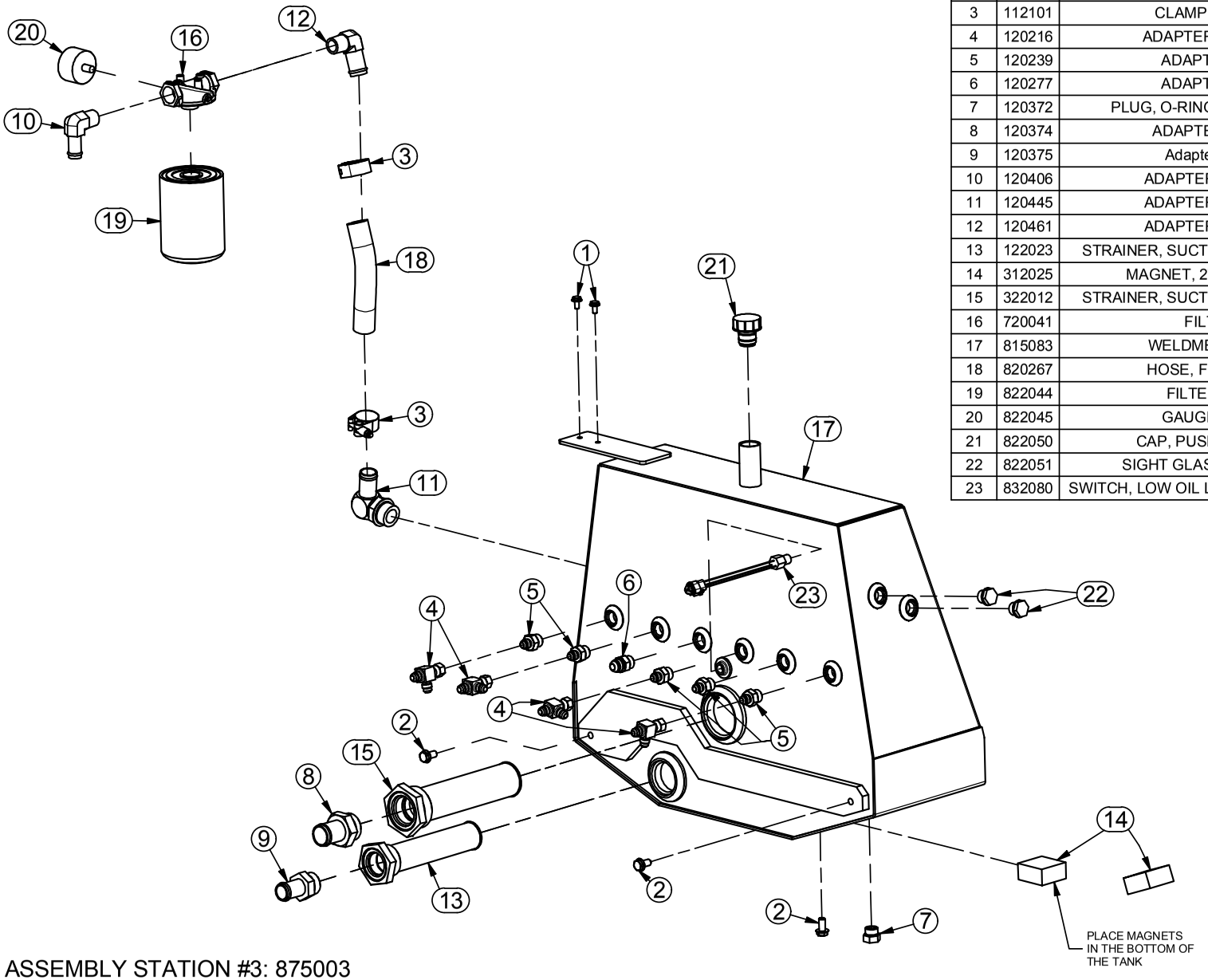

Parts List		
ITEM	PART #	DESCRIPTION
1	110434	BOLT, 1/4-20 X 0.5, WIZ FLANGE
2	110437	BOLT, 3/8-16 X 0.75, WIZ FLANGE
3	112101	CLAMP, 1.50", T-BOLT
4	120216	ADAPTER, 6MJ-6FJX-6MJ
5	120239	ADAPTER, 6MJ-8MB
6	120277	ADAPTER, 8MJ-8MB
7	120372	PLUG, O-RING -8, EXTERNAL HEX
8	120374	ADAPTER, 20BH-20MB
9	120375	Adapter, 16bh-16mb
10	120406	ADAPTER, 12HB-12MP90
11	120445	ADAPTER, 16BH-16MB90
12	120461	ADAPTER, 16HB-12MP90
13	122023	STRAINER, SUCTION, SAE-24/-16, 15 GPM
14	312025	MAGNET, 2"x2"x1" RECT 15LB
15	322012	STRAINER, SUCTION, SAE-32/-20, 25 GPM
16	720041	FILTER HEAD
17	815083	WELDMENT, HYD TANK
18	820267	HOSE, FILTER TO TANK
19	822044	FILTER, 3 MICRON
20	822045	GAUGE, OIL FILTER
21	822050	CAP, PUSH FIT BREATHER
22	822051	SIGHT GLASS, 8MB POLYMIDE
23	832080	SWITCH, LOW OIL LEVEL,1/4 MNPT, N.C. DRY

ASSEMBLY STATION #3: 875003

3/8/2018

PROPULSION PUMP ASSEMBLY

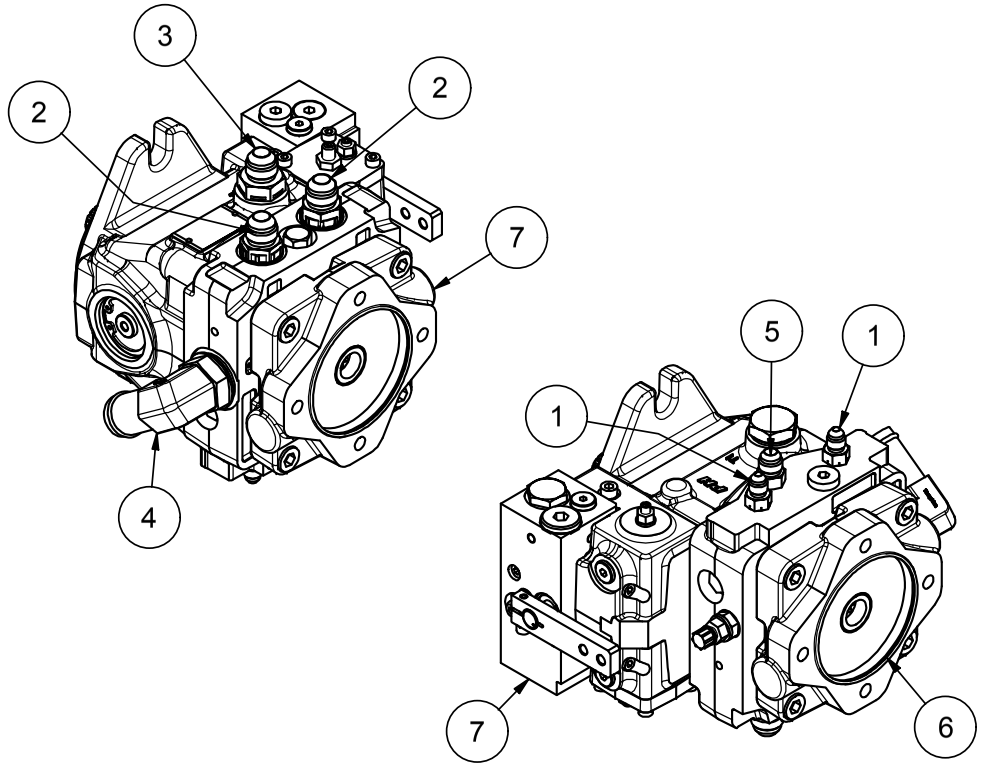

Parts List			
ITEM	QTY	PART #	DESCRIPTION
1	2	120233	ADAPTER, 4MJ-4MB
2	2	120277	ADAPTER, 8MJ-8MB
3	1	120446	ADAPTER, 8MJ-10MB
4	1	120491	ADAPTER, 16BH-12MB90
5	1	120665	ADAPTER, 6MJ-4MB
6	1	820247	O'RING 2-042 1/16" BUNA
7	1	823024	PUMP, PM10 PROP 1.24 CI/.43 CI

WHEEL MOTOR ASSEMBLY

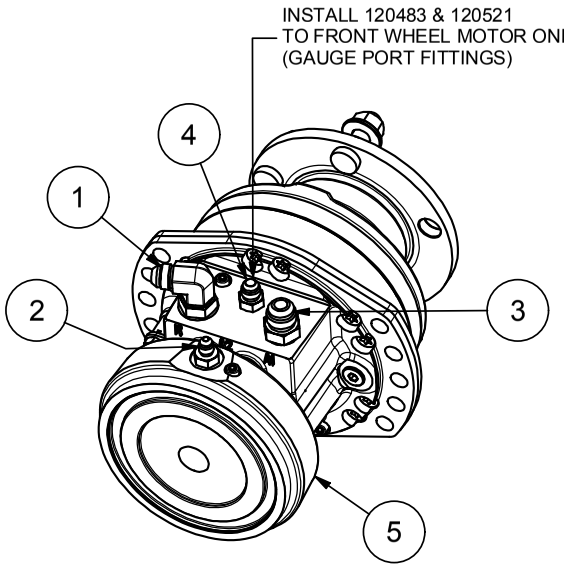

Parts List			
ITEM	QTY	PART #	DESCRIPTION
1	1	120245	ADAPTER, 8MJ-10MB90
2	1	120249	ADAPTER, 4MJ-6MB
3	1	120251	ADAPTER, 10MJ-10MB
4	1	120319	ADAPTER, 6MJ-6MB
5	1	823026	MOTOR, WHEEL 30.5 CI

ASSEMBLY STATION #3: 875003

7/18/2019

VALVE ASSEMBLIES

STEERING ORBITAL ASSEMBLY

Parts List		
ITEM	PART #	DESCRIPTION
1	111055	STUD, M10 X 1.5 X 42 GRADE 8.8
2	120222	ADAPTER, 6MJ-6MB90
3	120249	ADAPTER, 4MJ-6MB
4	120319	ADAPTER, 6MJ-6MB
5	323046	MOTOR, STEERING ORBITAL

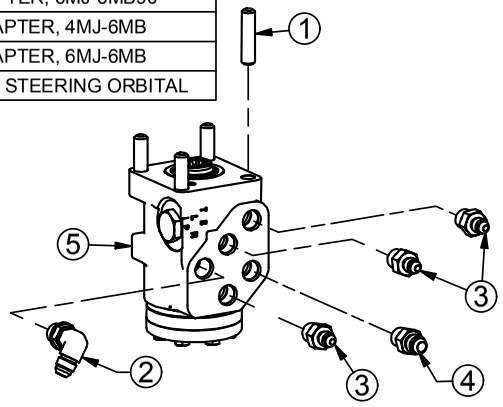

AUXIALLARY VALVE ASSEMBLY

Parts List		
ITEM	PART #	DESCRIPTION
1	120215	ADAPTER, 4MJ-4FJX-4MJ
2	120218	ADAPTER, 6MJ-6FJX90
3	120233	ADAPTER, 4MJ-4MB
4	120266	ADAPTER, 4MJ-4FJX90
5	120319	ADAPTER, 6MJ-6MB
6	120483	FITTING, GAGEPORT 6MJ-6FJX-4FP
7	120521	FITTING - TEST PORT
8	120724	VALVE, CHECK, 6MB-6MJ, .042 ORIFICE
9	823028	VALVE, AUXILIARY FUNCTION

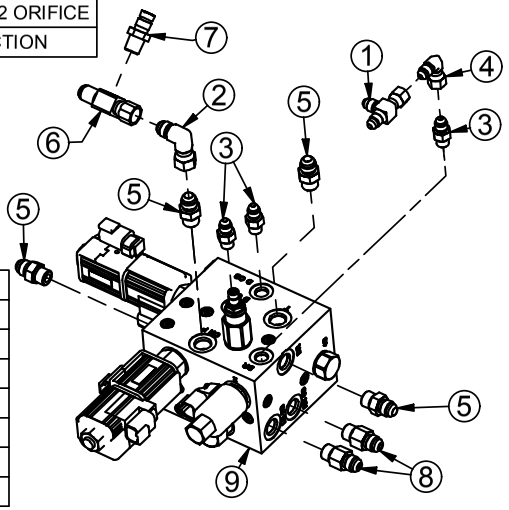

823028 - Service Parts	
PART #	DESCRIPTION
322053	COIL, 12VDC DEUTSCH, S SERIES
720189	VALVE, 3-POSITION 4-WAY SOLENOID
822052	VALVE, 2-POSITION 3-WAY SOLENOID
822053	VALVE, PRESSURE REDUCING
822054	VALVE, SHUTTLE
822055	COIL, 12VDC DEUTSCH

DECK VALVE ASSEMBLY

Parts List		
ITEM	PART #	DESCRIPTION
1	120251	ADAPTER, 10MJ-10MB
2	820158	DECK VALVE

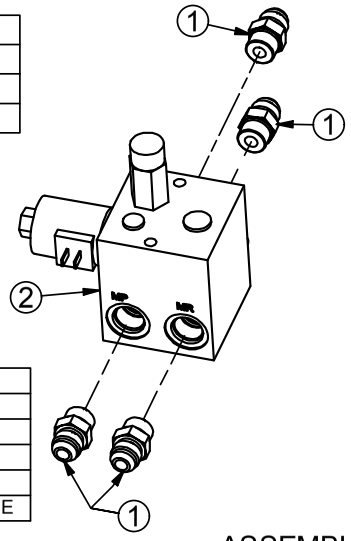

820158 - SERVICE PARTS	
PART	DESCRIPTION
820229	COIL, 12VDC DEUTSCH "ER"
820230	VALVE, COUNTER BALANCE
820231	RELIEF, 3000 PSI PRESSURE
820232	VALVE, N.O. SOLENOID CARTRIDGE

LOOP FLUSH VALVE ASSEMBLY

Parts List		
ITEM	PART #	DESCRIPTION
1	120239	ADAPTER, 6MJ-8MB
2	323053	VALVE, LOOP FLUSH

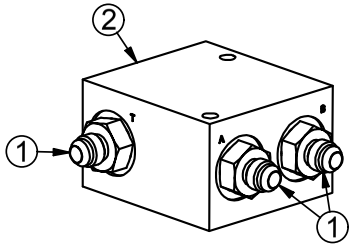

ASSEMBLY STATION #3: 875003

4/26/2019

VALVE & TANK INSTALLATION

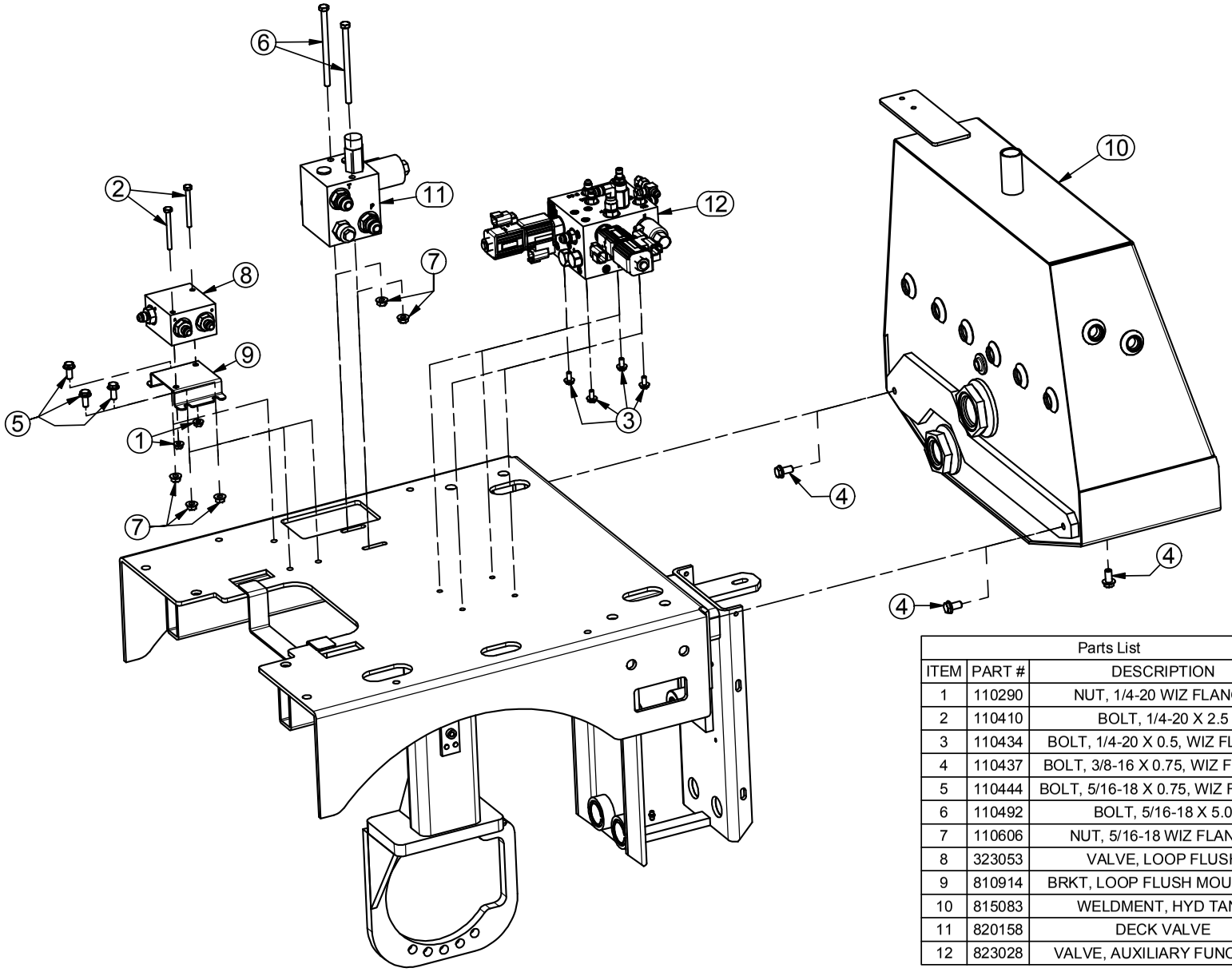

Parts List		
ITEM	PART #	DESCRIPTION
1	110290	NUT, 1/4-20 WIZ FLANGE
2	110410	BOLT, 1/4-20 X 2.5
3	110434	BOLT, 1/4-20 X 0.5, WIZ FLANGE
4	110437	BOLT, 3/8-16 X 0.75, WIZ FLANGE
5	110444	BOLT, 5/16-18 X 0.75, WIZ FLANGE
6	110492	BOLT, 5/16-18 X 5.0
7	110606	NUT, 5/16-18 WIZ FLANGE
8	323053	VALVE, LOOP FLUSH
9	810914	BRKT, LOOP FLUSH MOUNTING
10	815083	WELDMENT, HYD TANK
11	820158	DECK VALVE
12	823028	VALVE, AUXILIARY FUNCTION

ASSEMBLY STATION #3: 875003

4/26/2019

PROPULSION SYSTEM

(GROUND DRIVE)

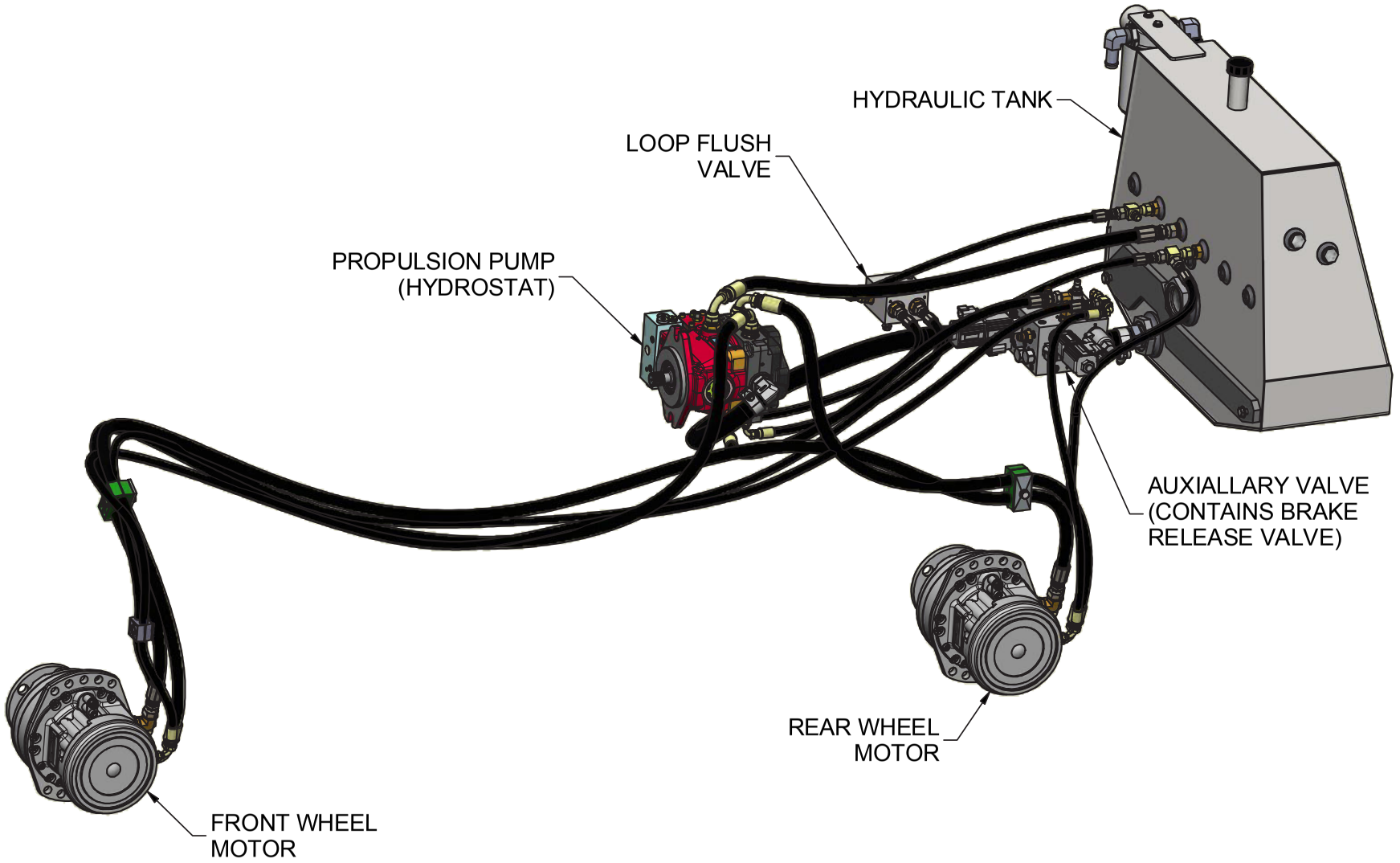

2/26/2019

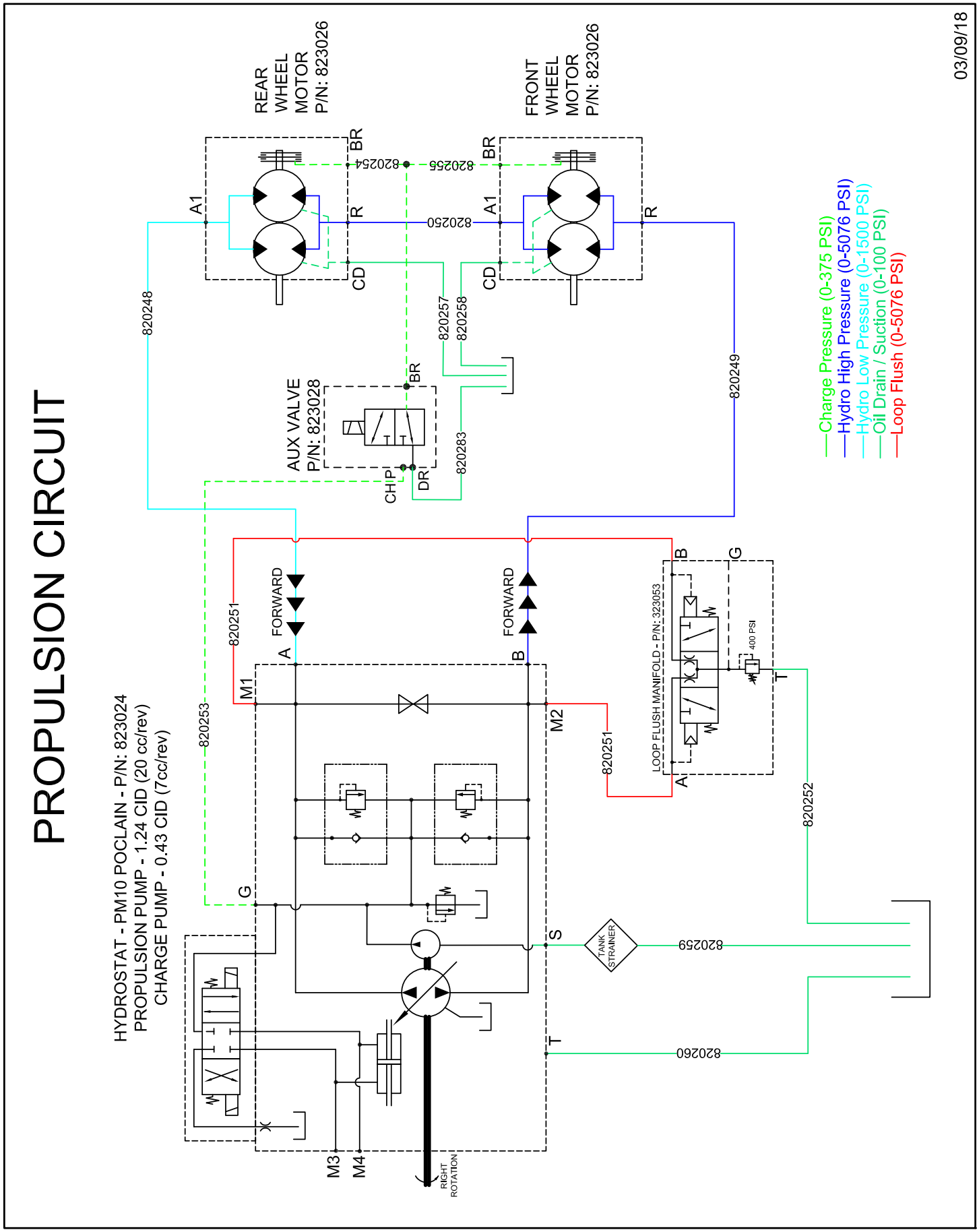
PROPULSION CIRCUIT
HYDROSTAT - PM10 POCLAIN - P/N: 823024
PROPULSION PUMP - 1.24 CID (20 cc/rev)
CHARGE PUMP - 0.43 CID (7cc/rev)
REAR WHEEL MOTOR P/N: 823026
FRONT WHEEL MOTOR P/N: 823026
AUX VALVE P/N: 823028
LOOP FLUSH MANIFOLD - P/N: 323053
400 PSI
FORWARD
TANK STRAINER
RIGHT ROTATION
820248
820249
820250
820251
820252
820253
820254
820255
820257
820258
820259
820260
820283
Charge Pressure (0-375 PSI)
Hydro High Pressure (0-5076 PSI)
Hydro Low Pressure (0-1500 PSI)
Oil Drain / Suction (0-100 PSI)
Loop Flush (0-5076 PSI)
03/09/18

PROPULSION PLUMBING

PUMP SUCTION & DRAIN PLUMBING

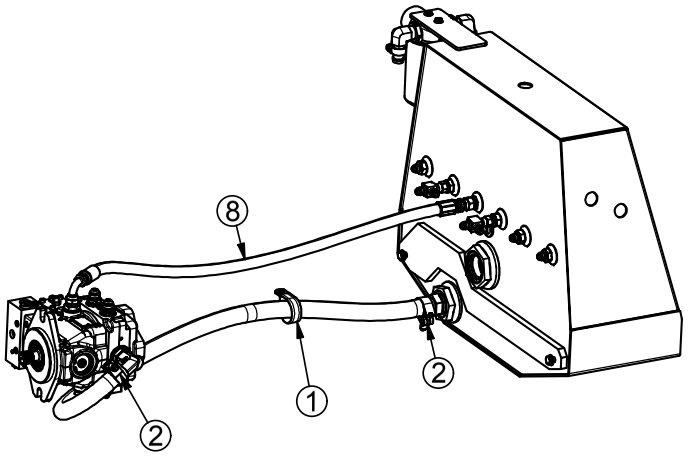

LOOP FLUSH & BRAKE RELEASE VALVE PLUMBING

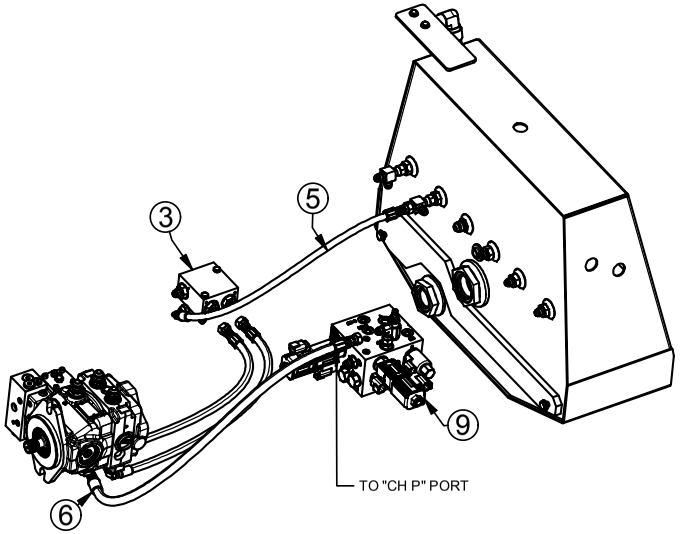

Parts List		
ITEM	PART #	DESCRIPTION
1	100499	CLAMP, ADEL 1.75ID X .406HOLE
2	112101	CLAMP, 1.50", T-BOLT
3	323053	VALVE, LOOP FLUSH
4	820251	HOSE ASSY, LOOP FLUSH PRESS
5	820252	HOSE ASSY, LOOP FLUSH TANK
6	820253	HOSE ASSY, CHARGE PRESS
7	820259	HOSE, PROPULSION SUCTION
8	820260	HOSE ASSY, PROP PUMP TO TANK
9	823028	VALVE, AUXILIARY FUNCTION

BOTTOM VIEW OF PUMP

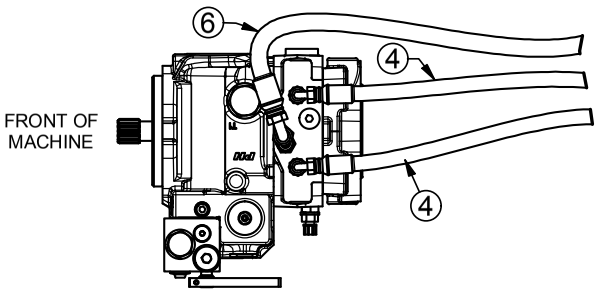

ASSEMBLY STATION #3: 875003

4/29/2019

PROPULSION PLUMBING - WHEEL MOTORS

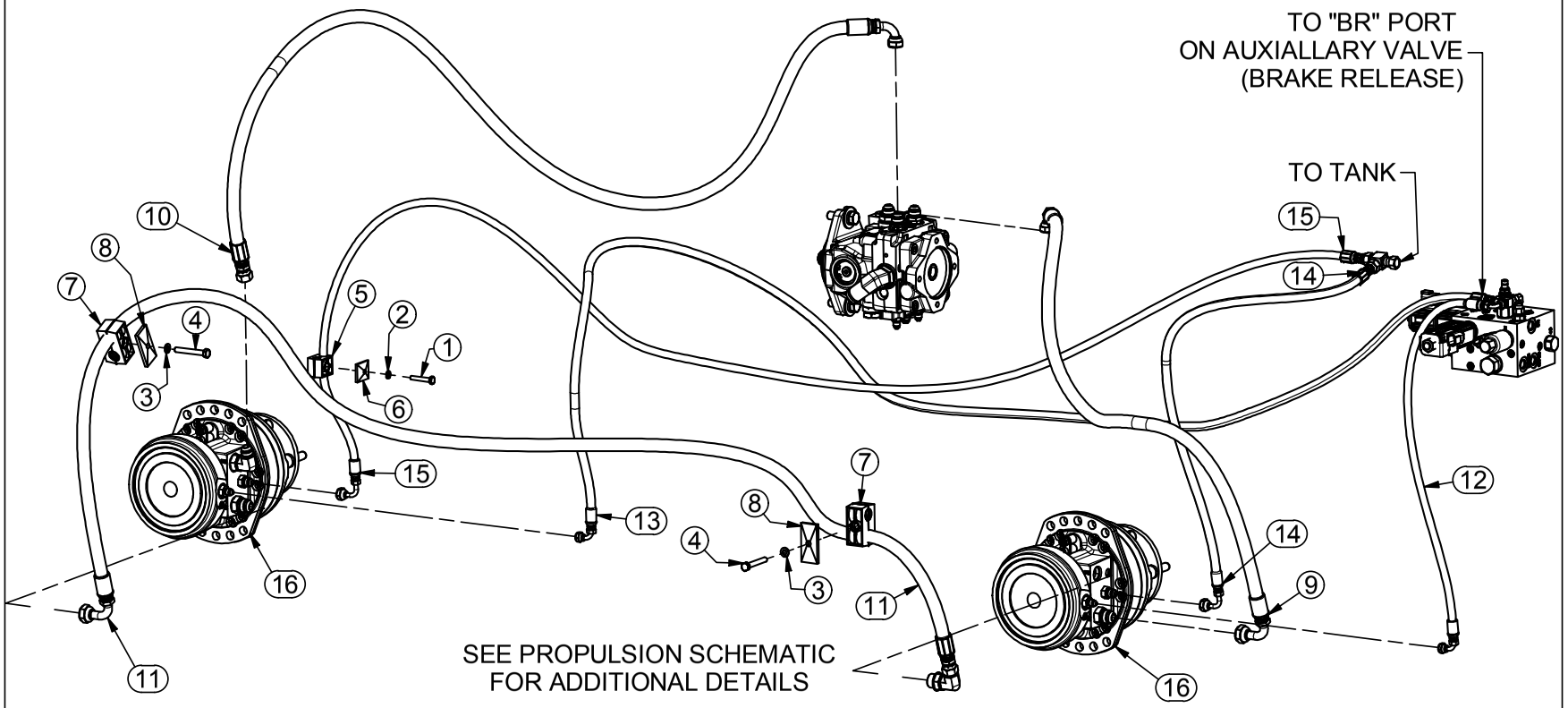

Parts List			Parts List		
ITEM	PART #	DESCRIPTION	ITEM	PART #	DESCRIPTION
1	110474	BOLT, 1/4-20 X 1-1/2	9	820248	HOSE ASSY, PROP PRESS A
2	110667	WASHER, 1/4" LOCK	10	820249	HOSE ASSY, PROP PRESS B
3	110674	WASHER, 5/16" LOCK	11	820250	HOSE ASSY, PROP PRESS SERIAL
4	111151	BOLT, 5/16-18 X 2-1/4	12	820254	HOSE ASSY, REAR BRAKE
5	522104	DOUBLE HOSE CLAMP	13	820255	HOSE ASSY, FRONT BRAKE
6	522105	DOUBLE COVERPLATE	14	820257	HOSE ASSY, REAR MTR CD
7	820097	CLAMP BODY	15	820258	HOSE ASSY, FRONT MTR CD
8	820098	COVER PLATE	16	823026	MOTOR, WHEEL 30.5 CI

ASSEMBLY STATION #3: 875003

4/29/2019

MACHINE HYDRAULIC SYSTEM

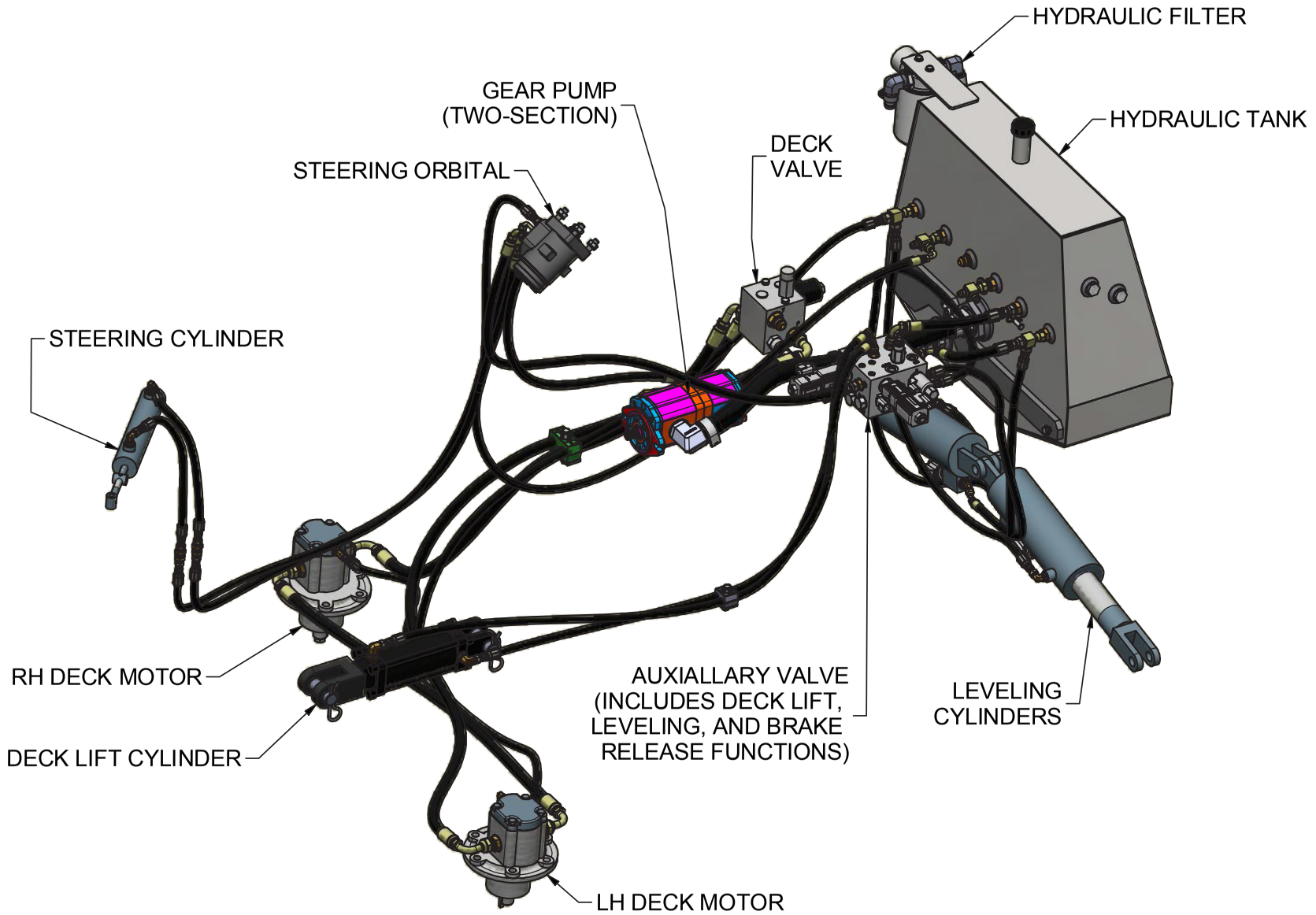

2/28/2019

GEAR PUMP ASSEMBLY & PLUMBING

Parts List		
ITEM	PART #	DESCRIPTION
1	112007	CLAMP, 1.75", T-BOLT
2	120144	ADAPTER, 6MJ-10MB
3	120224	ADAPTER, 10MJ-10MB90
4	120374	ADAPTER, 20BH-20MB
5	120721	ADAPTER, 20BH-12MB90
6	820261	HOSE ASSY, DECK PUMP PRESS
7	820268	HOSE, PROPULSION SUCTION
8	820269	HOSE ASSY, AUX PUMP PRESS
9	823025	PUMP, DOUBLE GEAR 1.16 CI / .49 CI

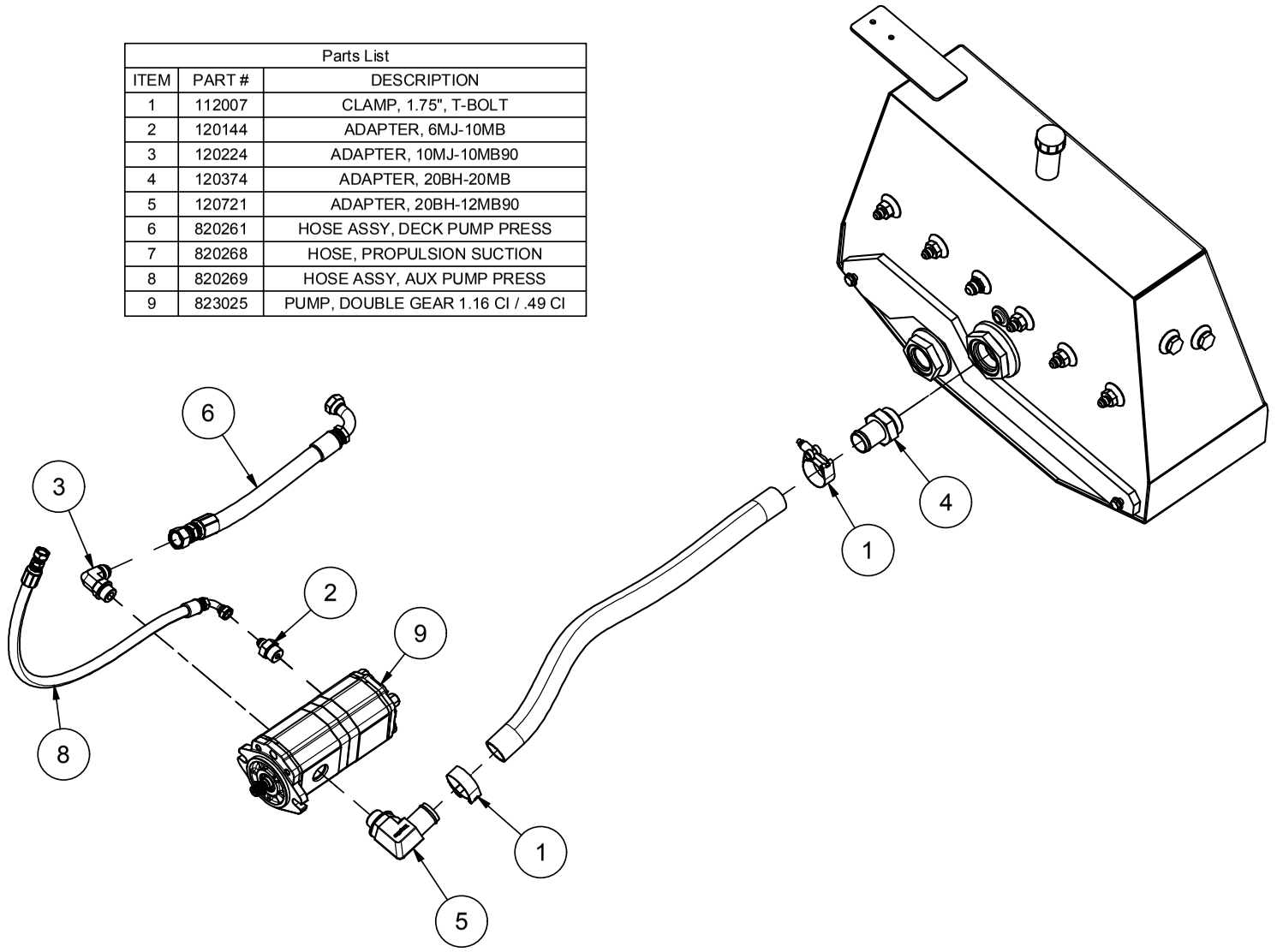

ASSEMBLY STATION #3: 875003

2/28/2019

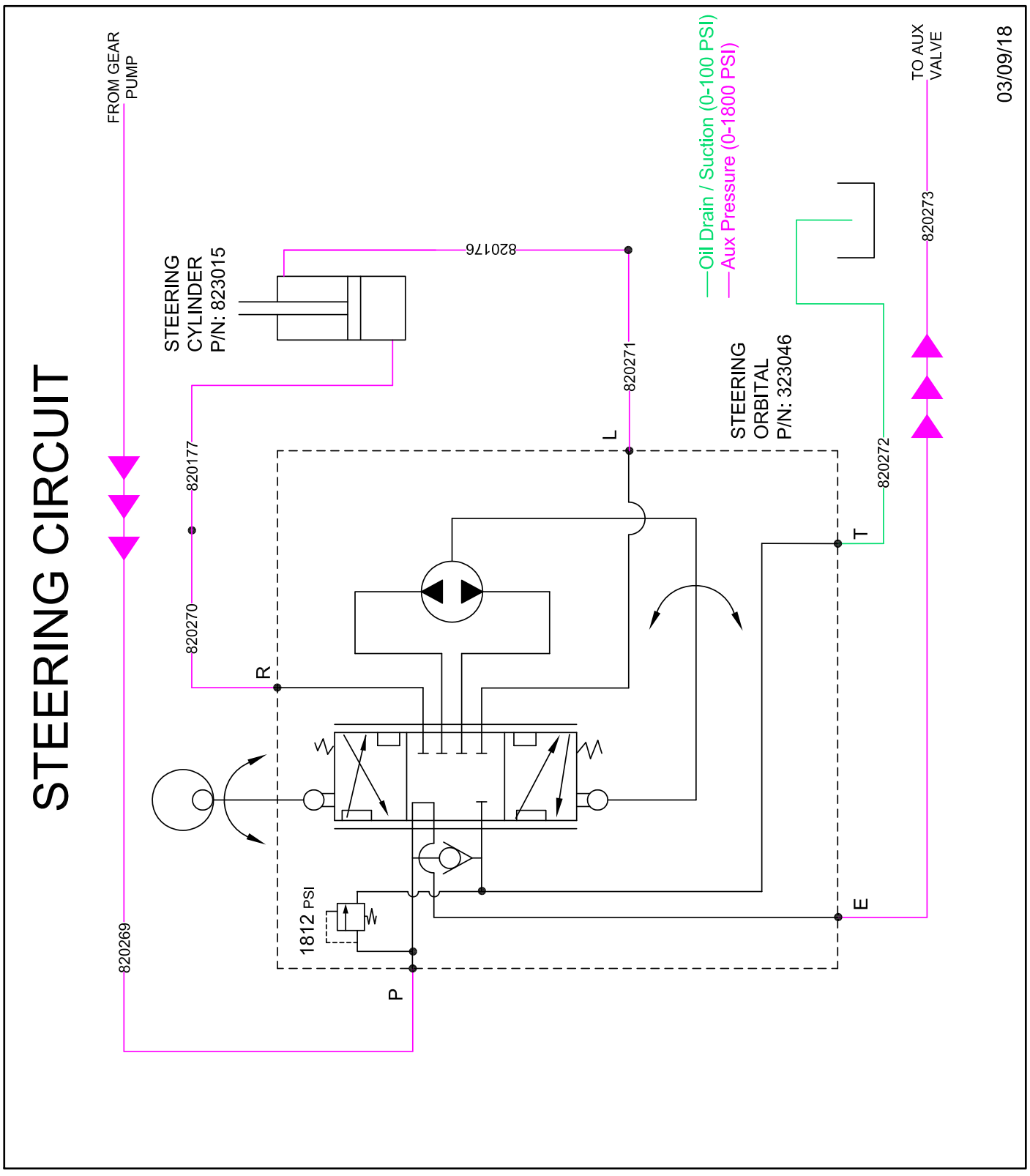
STEERING CIRCUIT
FROM GEAR PUMP
STEERING CYLINDER P/N: 823015
820176
820271
820177
820270
820269
Oil Drain / Suction (0-100 PSI)
Aux Pressure (0-1800 PSI)
STEERING ORBITAL P/N: 323046
820272
820273
TO AUX VALVE
03/09/18
L
R
T
E
P
1812 PSI

STEERING PLUMBING

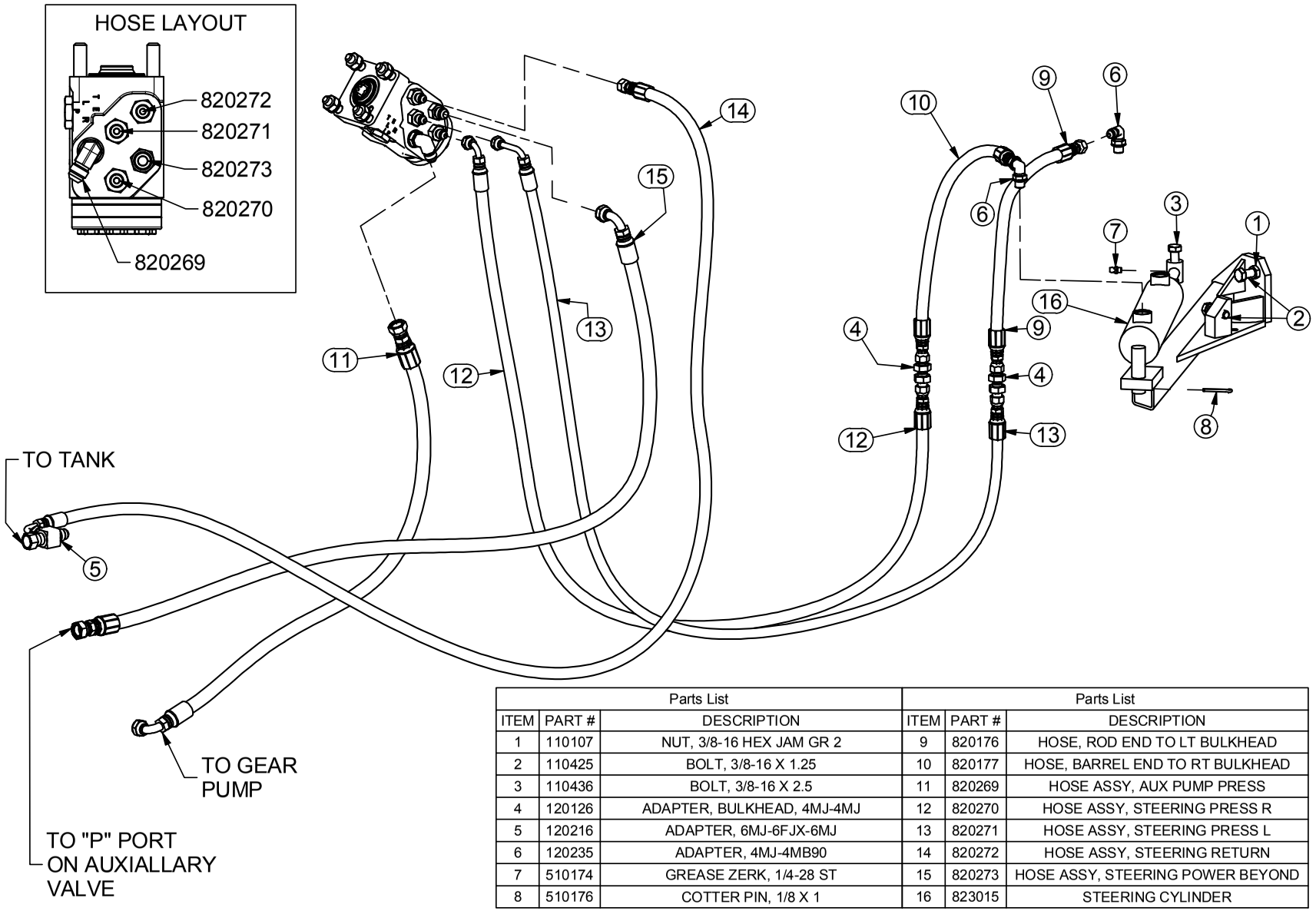

Parts List			Parts List		
ITEM	PART #	DESCRIPTION	ITEM	PART #	DESCRIPTION
1	110107	NUT, 3/8-16 HEX JAM GR 2	9	820176	HOSE, ROD END TO LT BULKHEAD
2	110425	BOLT, 3/8-16 X 1.25	10	820177	HOSE, BARREL END TO RT BULKHEAD
3	110436	BOLT, 3/8-16 X 2.5	11	820269	HOSE ASSY, AUX PUMP PRESS
4	120126	ADAPTER, BULKHEAD, 4MJ-4MJ	12	820270	HOSE ASSY, STEERING PRESS R
5	120216	ADAPTER, 6MJ-6FJX-6MJ	13	820271	HOSE ASSY, STEERING PRESS L
6	120235	ADAPTER, 4MJ-4MB90	14	820272	HOSE ASSY, STEERING RETURN
7	510174	GREASE ZERK, 1/4-28 ST	15	820273	HOSE ASSY, STEERING POWER BEYOND
8	510176	COTTER PIN, 1/8 X 1	16	823015	STEERING CYLINDER

ASSEMBLY STATION #3: 875003

4/29/2019

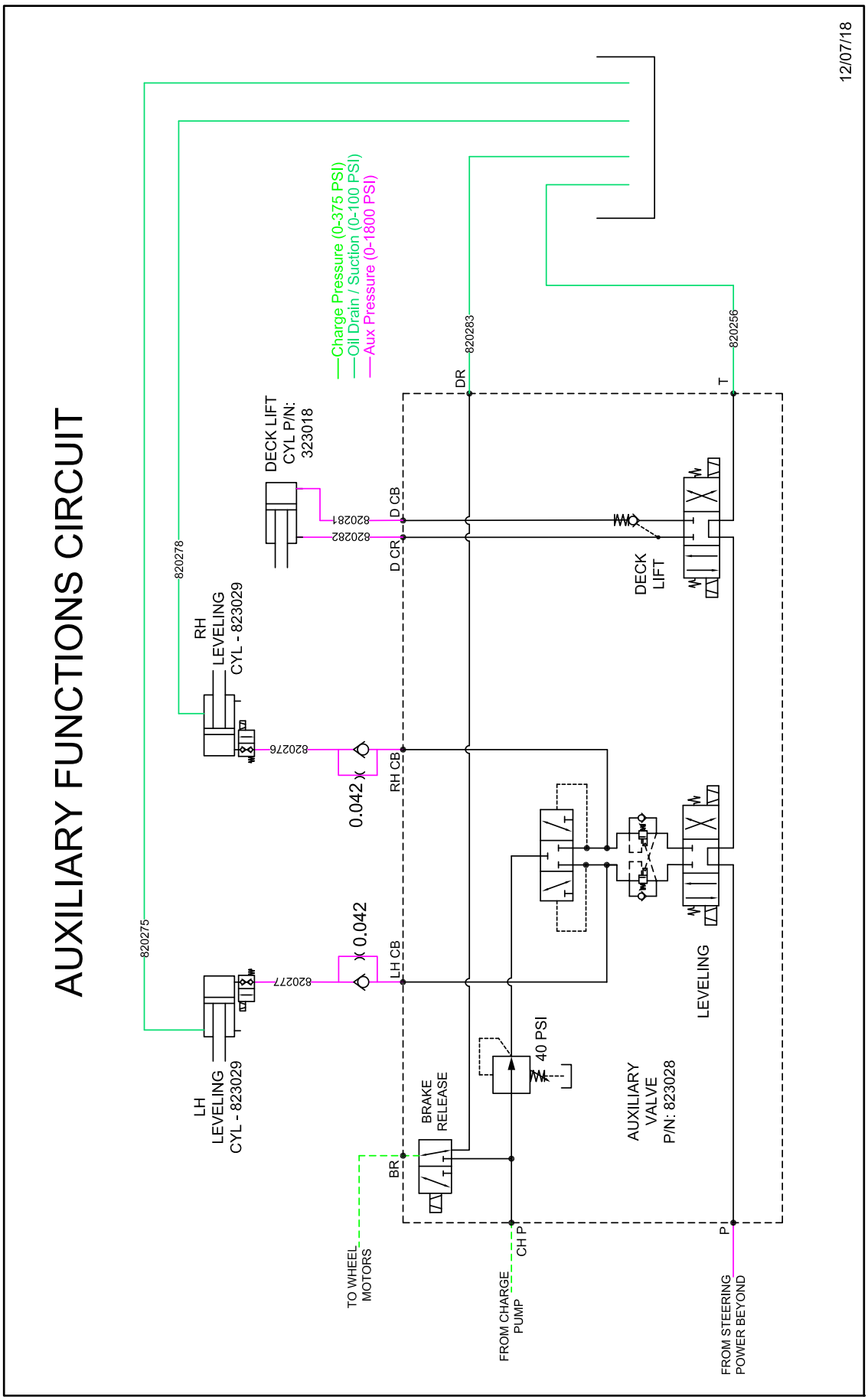
AUXILIARY FUNCTIONS CIRCUIT
12/07/18
—Charge Pressure (0-375 PSI)
—Oil Drain / Suction (0-100 PSI)
—Aux Pressure (0-1800 PSI)
820283
DR
820256
T
DECK LIFT CYL P/N: 323018
820281
820282
D CB
D CR
DECK LIFT
820278
RH LEVELING CYL - 823029
820276
0.042
RH CB
820275
820277
0.042
LH CB
LH LEVELING CYL - 823029
LEVELING
40 PSI
BRAKE RELEASE
BR
AUXILIARY VALVE P/N: 823028
TO WHEEL MOTORS
FROM CHARGE PUMP
CH P
P
FROM STEERING POWER BEYOND

DECK LIFT PLUMBING

Parts List		
ITEM	PART #	DESCRIPTION
1	110354	BOLT, 1/4-20 X 2.0 HEX HEAD
2	110609	NUT, 1/4-20
3	110667	WASHER, 1/4" LOCK
4	120220	ADAPTER, 4MJ-6MB90
5	323018	CYLINDER - 2 x 4, SAE-6, TIE ROD
6	522104	DOUBLE HOSE CLAMP
7	522105	DOUBLE COVERPLATE
8	820256	HOSE ASSY, AUX VALVE TANK
9	820281	HOSE ASSY, DECK CYL BASE
10	820282	HOSE ASSY, DECK CYL ROD END
11	820283	HOSE ASSY, AUX CIRCUIT RETURN
12	823028	VALVE, AUXILIARY FUNCTION

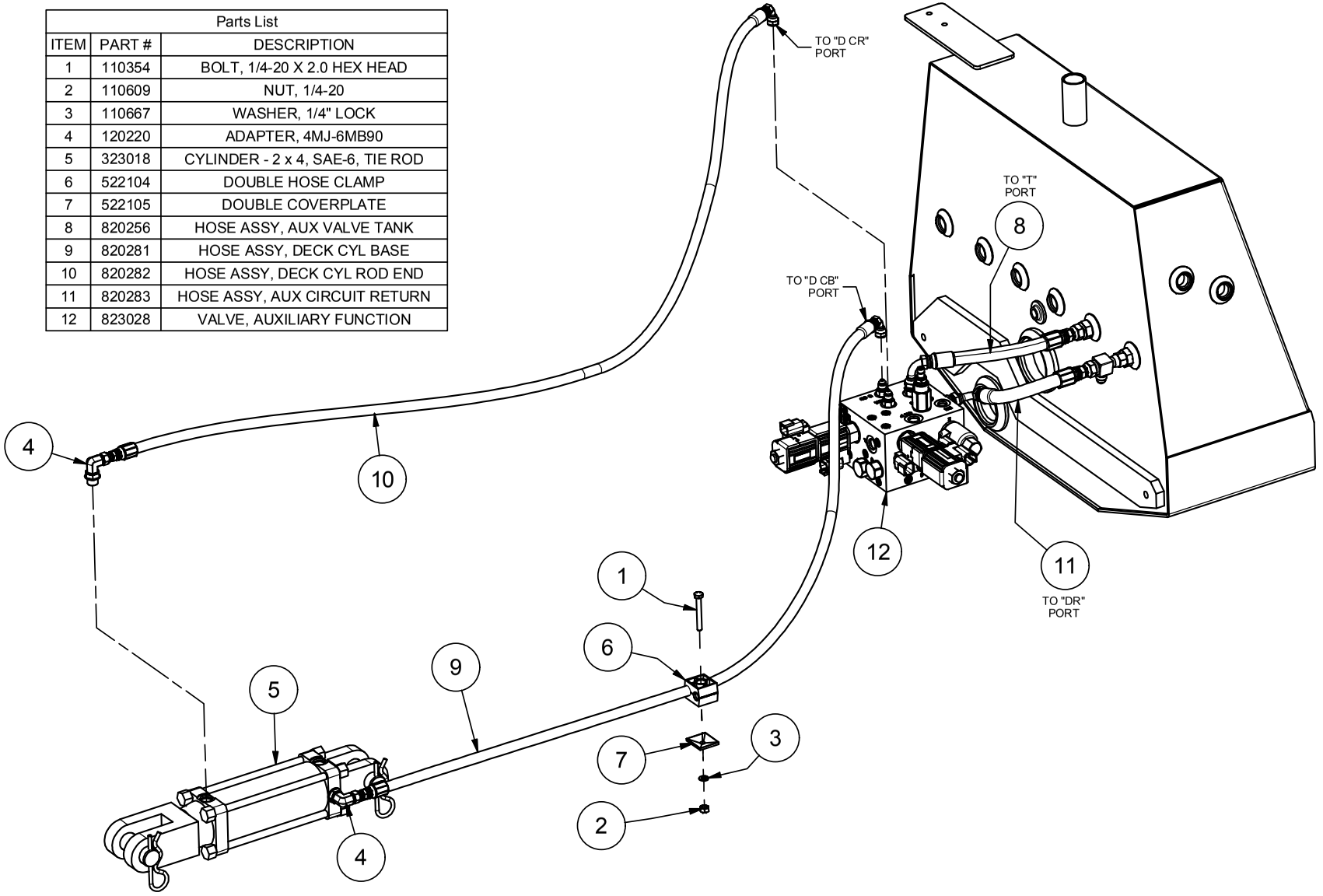

ASSEMBLY STATION #2 & #3: 875002 & 875003

3/9/2018

LEVELING PLUMBING

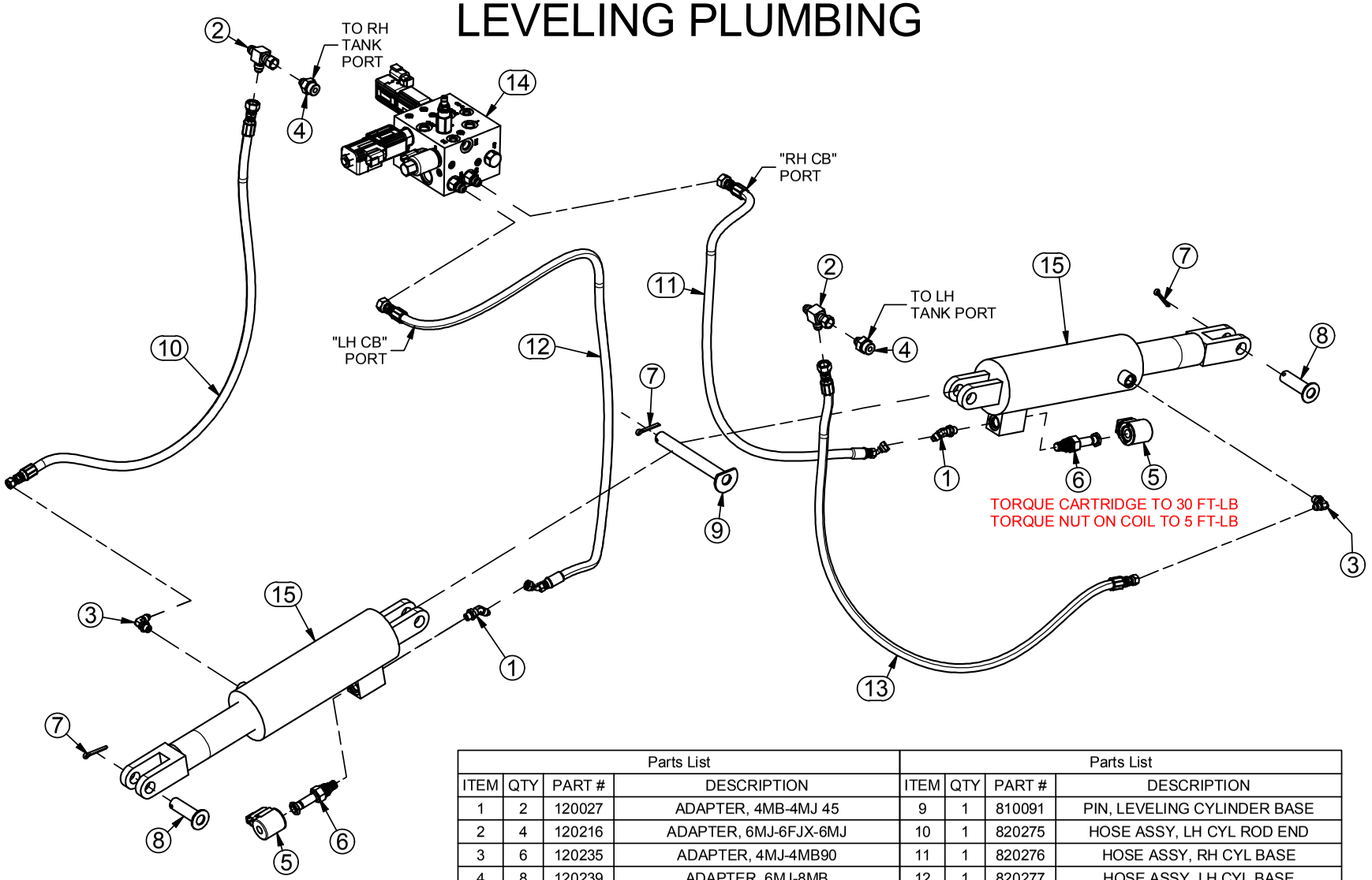

Parts List				Parts List			
ITEM	QTY	PART #	DESCRIPTION	ITEM	QTY	PART #	DESCRIPTION
1	2	120027	ADAPTER, 4MB-4MJ 45	9	1	810091	PIN, LEVELING CYLINDER BASE
2	4	120216	ADAPTER, 6MJ-6FJX-6MJ	10	1	820275	HOSE ASSY, LH CYL ROD END
3	6	120235	ADAPTER, 4MJ-4MB90	11	1	820276	HOSE ASSY, RH CYL BASE
4	8	120239	ADAPTER, 6MJ-8MB	12	1	820277	HOSE ASSY, LH CYL BASE
5	2	122032	COIL, #8 EATON, 12VDC, DEUTSCH	13	1	820278	HOSE ASSY, RH CYL ROD END
6	2	222056	Valve, #8 Eaton, Dbl Poppet	14	1	823028	VALVE, AUXILIARY FUNCTION
7	3	500184	COTTER PIN, 3/16 X 1.25	15	2	823029	CYLINDER, 3.0" X 6.56" X 2.0", LEVELING
8	2	510394	LEVELING CYLINDER PIN				

ASSEMBLY STATION #3: 875003

3/4/2019

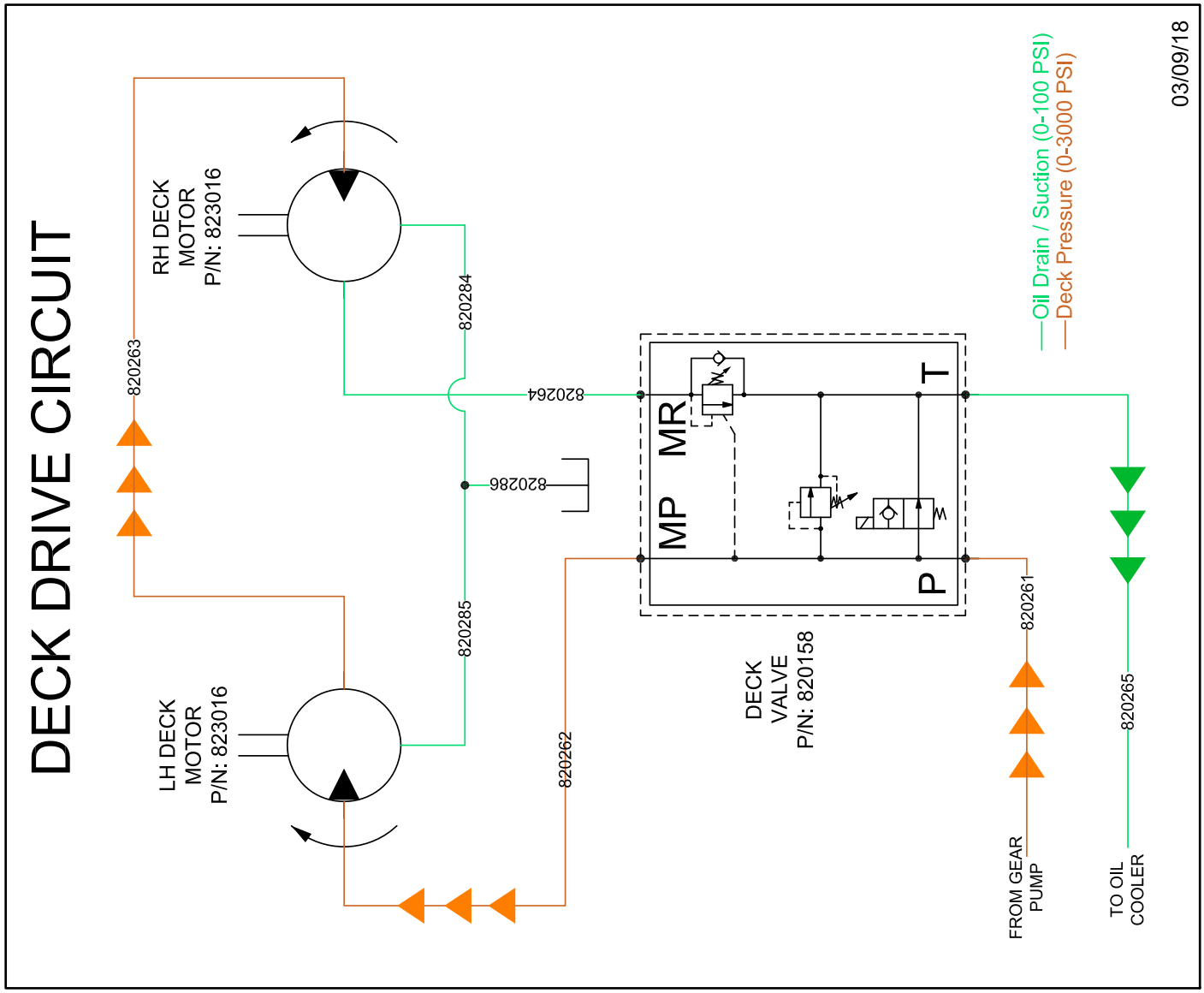
DECK DRIVE CIRCUIT
RH DECK MOTOR P/N: 823016
LH DECK MOTOR P/N: 823016
820263
820284
820264
820286
820285
820262
DECK VALVE P/N: 820158
MP
MR
T
P
820261
820265
FROM GEAR PUMP
TO OIL COOLER
Oil Drain / Suction (0-100 PSI)
Deck Pressure (0-3000 PSI)
03/09/18

DECK PLUMBING

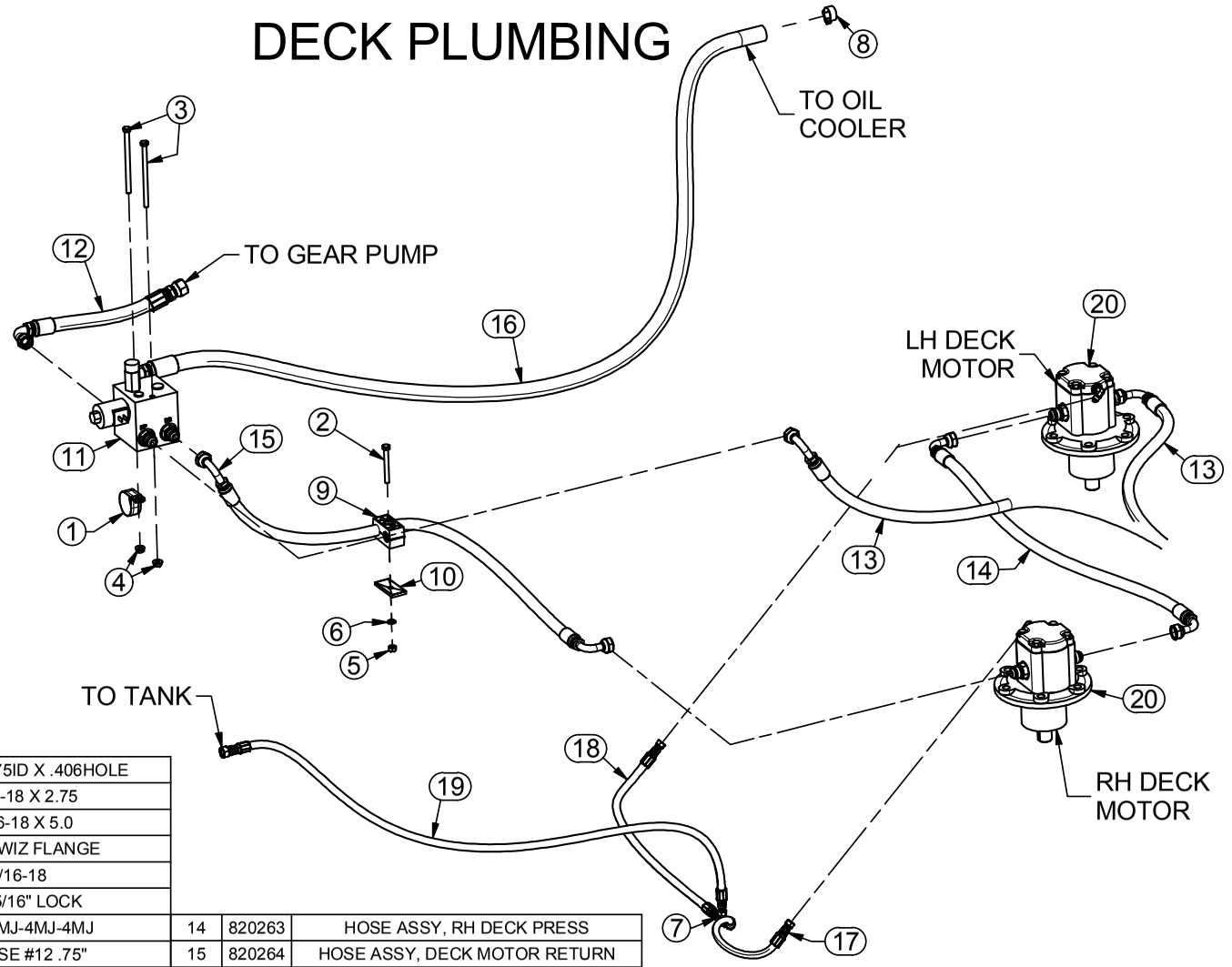

ITEM	PART #	DESCRIPTION
1	100499	CLAMP, ADEL 1.75ID X .406HOLE
2	110491	BOLT, 5/16-18 X 2.75
3	110492	BOLT, 5/16-18 X 5.0
4	110606	NUT, 5/16-18 WIZ FLANGE
5	110608	NUT, 5/16-18
6	110674	WASHER, 5/16" LOCK
7	120241	ADAPTER, 4MJ-4MJ-4MJ
8	520099	CLAMP, HOSE #12 .75"
9	820097	CLAMP BODY
10	820098	COVER PLATE
11	820158	DECK VALVE
12	820261	HOSE ASSY, DECK PUMP PRESS
13	820262	HOSE ASSY, LH DECK PRESS

Parts List

ITEM	PART #	DESCRIPTION
14	820263	HOSE ASSY, RH DECK PRESS
15	820264	HOSE ASSY, DECK MOTOR RETURN
16	820265	HOSE ASSY, OIL COOLER SUPPLY
17	820284	HOSE ASSY, RH DECK MTR CD
18	820285	HOSE ASSY, LH DECK MTR CD
19	820286	HOSE ASSY, DECK MTR CD TO TANK
20	823016	MOTOR, DECK, BI-DIRECTIONAL, 1.65 CI

Parts List

ASSEMBLY STATION #3 & 4: 875003 & 875004

4/29/2019

OIL COOLER PLUMBING

Parts List		
ITEM	PART #	DESCRIPTION
1	520099	CLAMP, HOSE #12 .75"
2	820158	DECK VALVE
3	820265	HOSE ASSY, OIL COOLER SUPPLY
4	820266	HOSE, COOLER TO FILTER
5	832076	Switch, 190 F Temp, 8MB, N.C. Rising
6	843006	COOLING PACKAGE, RADIATOR & OIL

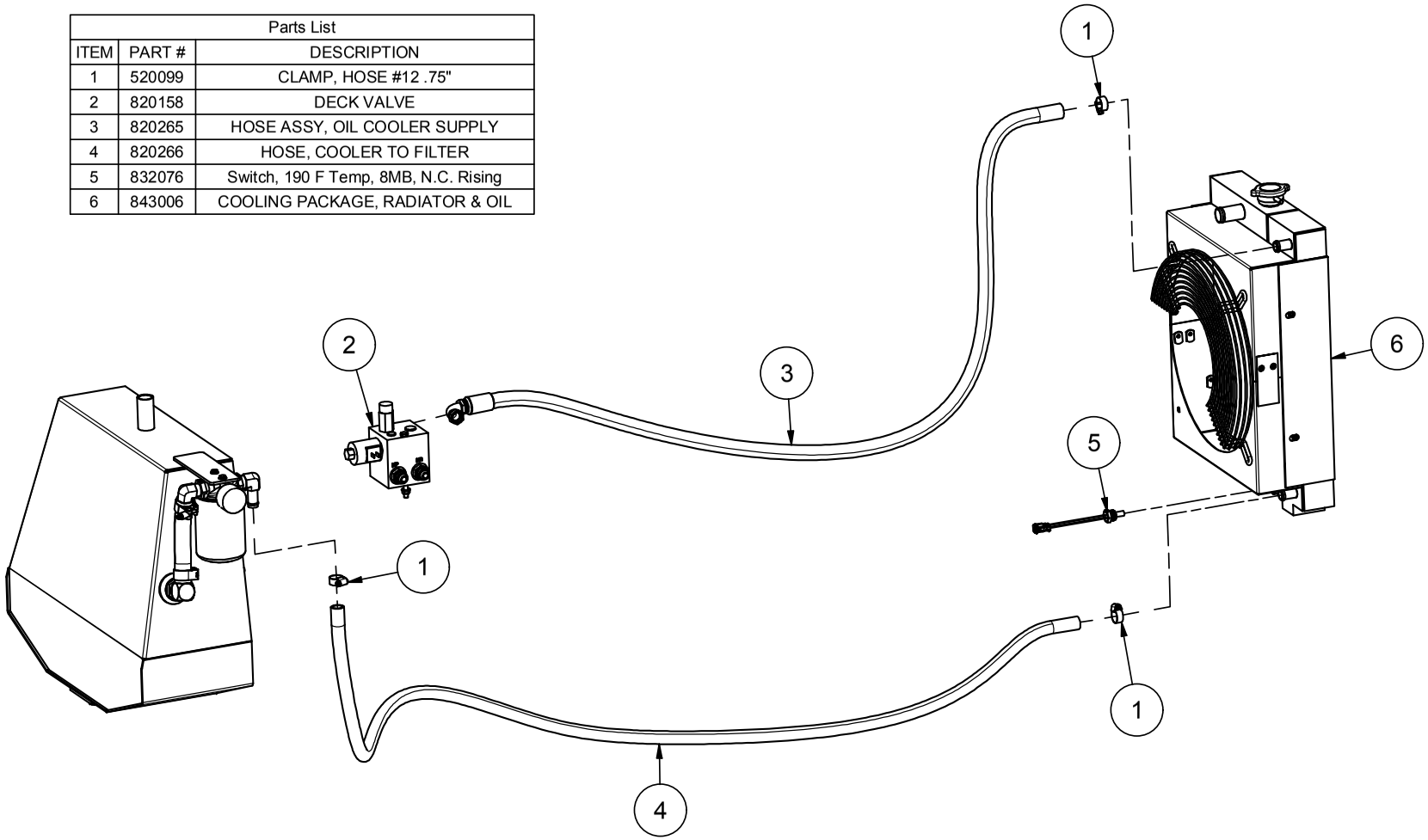

ASSEMBLY STATION #2 & 3: 875002 & 875003

3/4/2019

Electrical System

72LC WIRING SCHEMATIC DIAGRAM OVERVIEW

832075
INSTRUMENT PANEL HARNESS

832074
MASTER HARNESS

832073
RELAY HARNESS

832072
ENGINE HARNESS

830063
Positive Battery Cable

530051
Negative Battery Cable

832001
Engine Ground Cable

50 AMP FUSE

BATTERY P/N: 832011

INDICATOR LIGHTS / ALARM

- ENGINE TEMP LIGHT
  - ILLUMINATES IF ENGINE TEMP EXCEEDS 215 DEG F
- LOW HYDRAULIC OIL LIGHT
  - ILLUMINATES IF THE HYDRAULIC OIL IS LOW
- LEVELING LOCKOUT LIGHT & ALARM
  - ILLUMINATES WHEN THE AUTO LEVEL FUNCTION HAS BEEN LOCKED OUT & THE ALARM SOUNDS
- BATTERY LIGHT
  - ILLUMINATES IF CHARGING SYSTEM VOLTAGE IS LOW
- ENGINE OIL LIGHT
  - ILLUMINATES WHEN THE OIL PRESSURE DROPS BELOW 7 PSI
- PARKING BRAKE LIGHT
  - ILLUMINATES WHEN THE PARK BRAKE IS APPLIED
- GLOW PLUG LIGHT
  - ILLUMINATES WHEN THE KEY SWITCH IS TURNED TO THE PRE-HEAT POSITION
- MOWER DECK LIGHT
  - ILLUMINATES WHEN THE MOWER BLADES ARE ENGAGED

SAFETY INTERLOCKS / WIRING LOGIC

- TO START MACHINE
  - MUST BE IN NEUTRAL
  - MOWER BLADES MUST BE "OFF"
- TO TURN MOWER BLADES "ON"
  - OPERATOR MUST BE IN SEAT
  - HYD OIL TEMP MUST BE LESS THAN 190 DEG F
- 2 SEC TIME DELAY ADDED TO SEAT SWITCH TO ACCOUNT FOR OPERATOR BOUNCE
- PARK BRAKE IS APPLIED WHEN OPERATOR IS OUT OF SEAT
- LEVELING
  - VALVES ON CYLS ARE OPEN WHEN IN AUTO MODE & MANUAL MODE.
  - IF THE INCLINOMETER SENSES THAT THE MACHINE IS NOT STABLE OR IF THE MACHINE ANGLE HAS CHANGED AT A QUICK RATE, THEN THE VALVES ON THE LEVELING CYLINDERS ARE CLOSED TO LOCK THE MACHINE IN ITS CURRENT POSITION & THE AUTO LEVEL FUNCTION WILL REMAIN UNACTIVE. TO RESET THE AUTO LEVEL FUNCTION, PRESS THE MOMENTARY RESET SWITCH LOCATED ON THE DASH. (THE MANUAL OVERIDE SWITCHES WILL STILL LEVEL THE MACHINE WHEN THE AUTO LEVEL FUNCTION IS LOCKED OUT.)

07/16/19

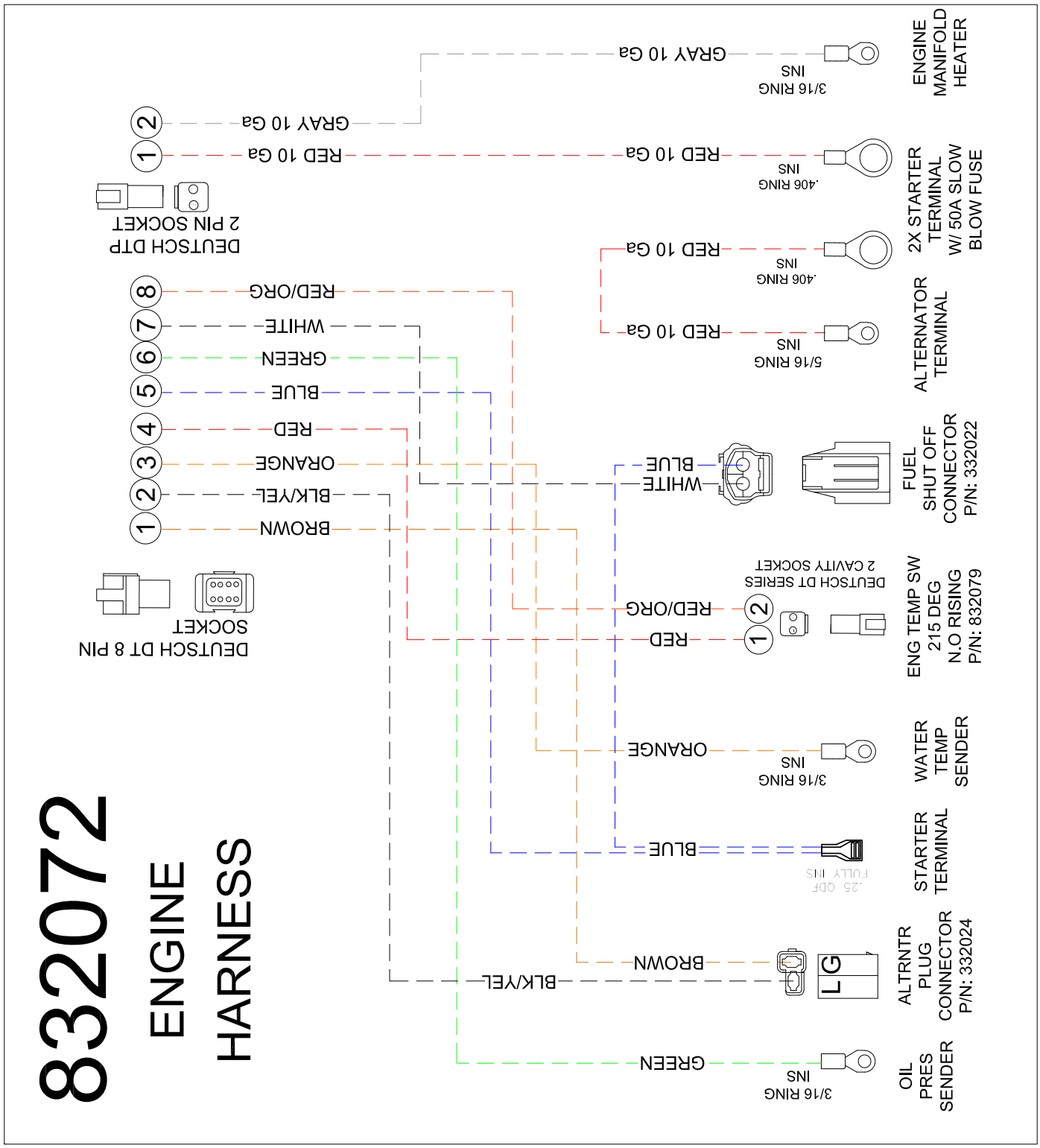
832072
ENGINE
HARNESS
ENGINE MANIFOLD HEATER
3/16 RING
INS
GRAY 10 Ga
2X STARTER TERMINAL W/ 50A SLOW BLOW FUSE
.406 RING
INS
RED 10 Ga
ALTERNATOR TERMINAL
5/16 RING
INS
RED 10 Ga
FUEL SHUT OFF CONNECTOR P/N: 332022
BLUE
WHITE
ENG TEMP SW 215 DEG N.O RISING P/N: 832079
DEUTSCH DT SERIES 2 CAVITY SOCKET
RED/ORG
RED
WATER TEMP SENDER
3/16 RING
INS
ORANGE
STARTER TERMINAL
.25 ODF
FULLY INS
BLUE
ALTRNTR PLUG CONNECTOR P/N: 332024
LG
BROWN
BLK/YEL
OIL PRES SENDER
3/16 RING
INS
GREEN
DEUTSCH DTP 2 PIN SOCKET
GRAY 10 Ga
RED 10 Ga
DEUTSCH DT 8 PIN SOCKET
RED/ORG
WHITE
GREEN
BLUE
RED
ORANGE
BLK/YEL
BROWN

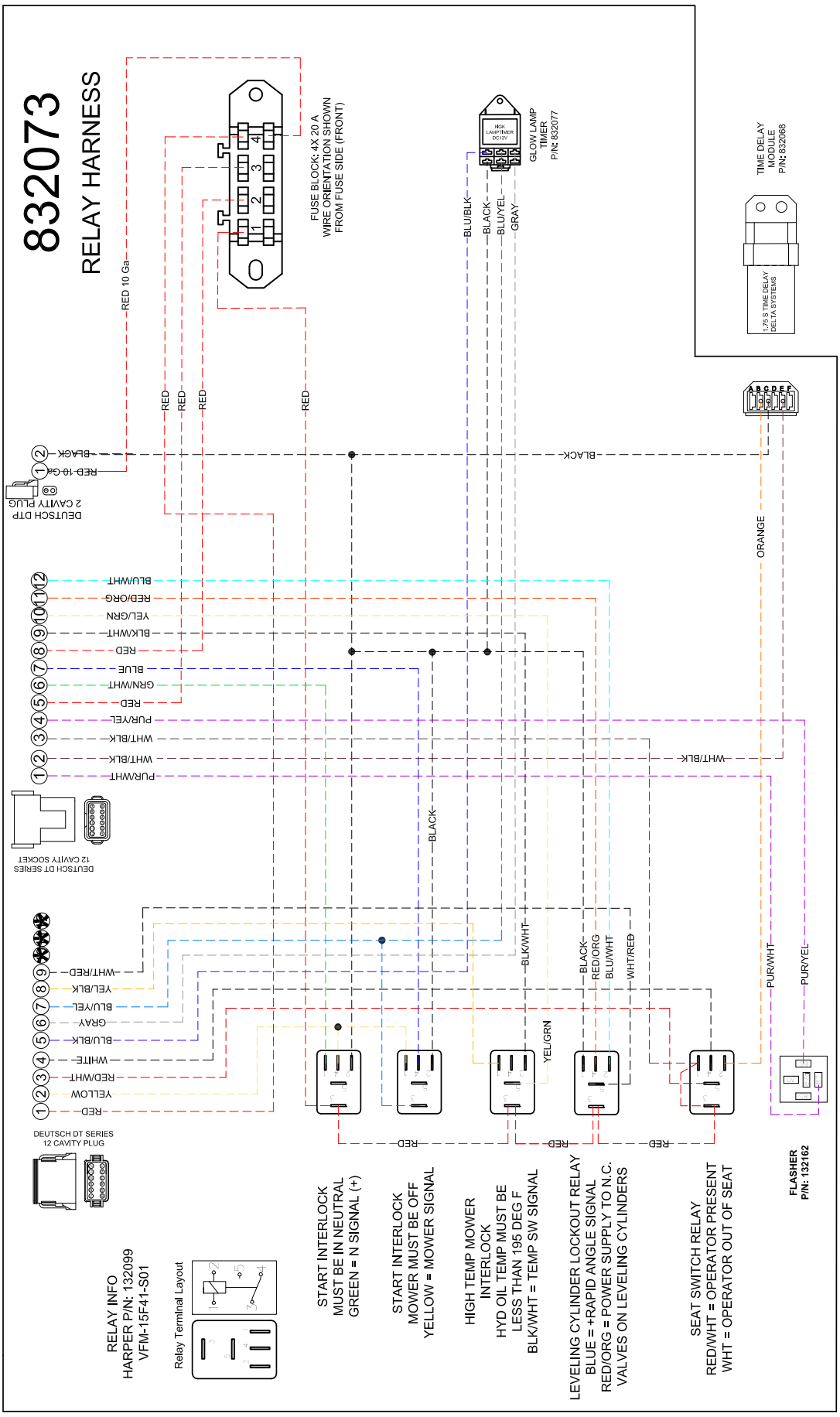
8320 73
RELAY HARNESS
RED 10 Ga
FUSE BLOCK: 4X 20 A
WIRE ORIENTATION SHOWN
FROM FUSE SIDE (FRONT)
GLOW LAMP TIMER P/N: 832077
TIME DELAY MODULE P/N: 832068
1.75 S TIME DELAY DELTA SYSTEMS
BLU/BLK
BLACK
BLU/YEL
GRAY
RED
ORANGE
BLACK
DEUTSCH DTP 2 CAVITY PLUG
DEUTSCH DT SERIES 12 CAVITY SOCKET
DEUTSCH DT SERIES 12 CAVITY PLUG
WHT/RED
YEL/BLK
BLU/YEL
GRAY
BLU/BLK
WHITE
RED/WHT
YELLOW
RED
PUR/WHT
WHT/BLK
WHT/BLK
PUR/YEL
RED
GRN/WHT
BLUE
RED
BLK/WHT
YEL/GRN
RED/ORG
BLU/WHT
RELAY INFO
HARPER P/N: 132099
VFM-15F41-S01
Relay Terminal Layout
START INTERLOCK
MUST BE IN NEUTRAL
GREEN = N SIGNAL (+)
START INTERLOCK
MOWER MUST BE OFF
YELLOW = MOWER SIGNAL
HIGH TEMP MOWER
INTERLOCK
HYD OIL TEMP MUST BE
LESS THAN 195 DEG F
BLK/WHT = TEMP SW SIGNAL
LEVELING CYLINDER LOCKOUT RELAY
BLUE = +RAPID ANGLE SIGNAL
RED/ORG = POWER SUPPLY TO N.C.
VALVES ON LEVELING CYLINDERS
SEAT SWITCH RELAY
RED/WHT = OPERATOR PRESENT
WHT = OPERATOR OUT OF SEAT
FLASHER
P/N: 132162

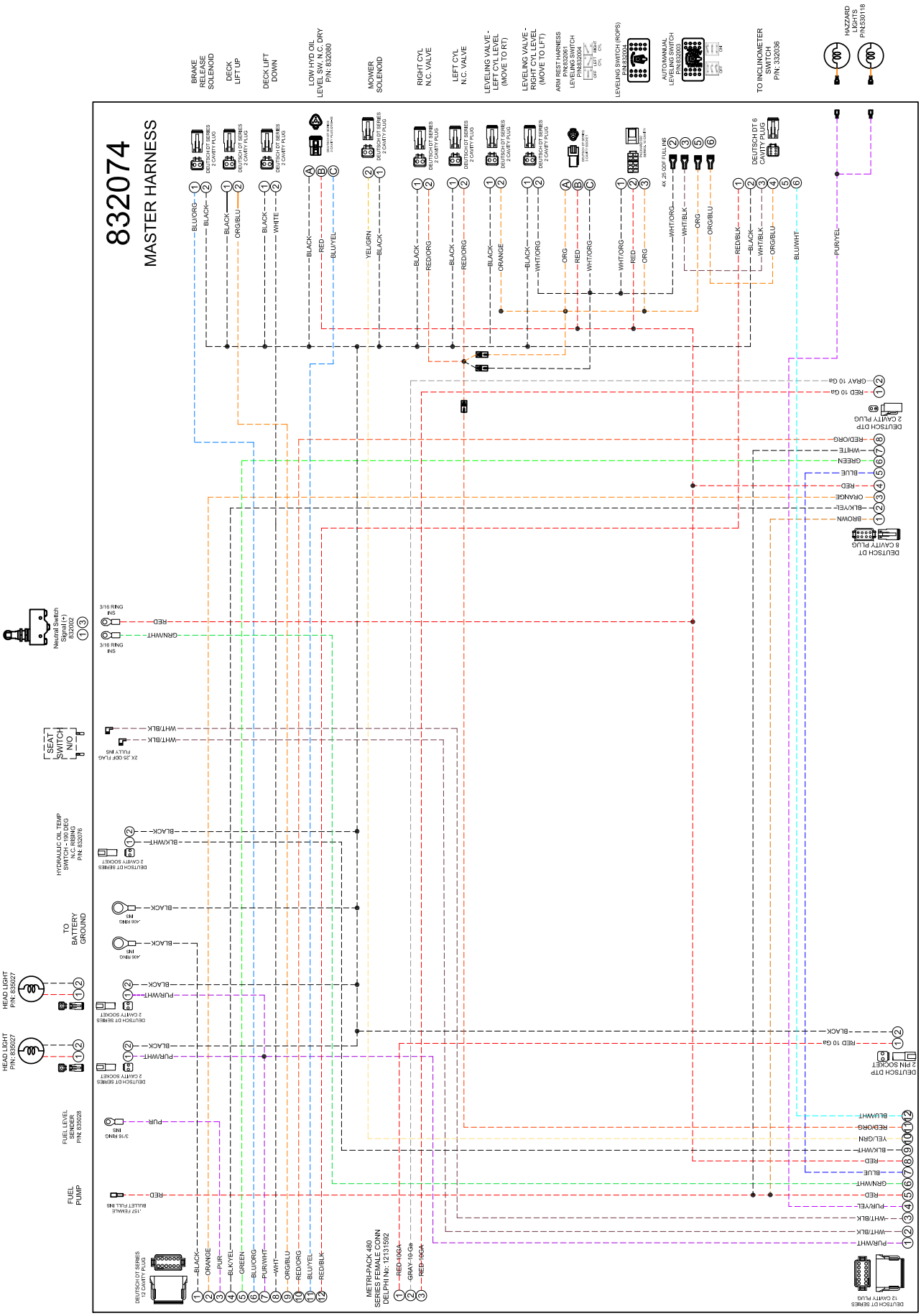
832074
MASTER HARNESS
BRAKE RELEASE SOLENOID
DECK LIFT UP
DECK LIFT DOWN
LOW HYD OIL LEVEL SW, N.C. DRY P/N: 832080
MOWER SOLENOID
RIGHT CYL N.C. VALVE
LEFT CYL N.C. VALVE
LEVELING VALVE - LEFT CYL LEVEL (MOVE TO RT)
LEVELING VALVE - RIGHT CYL LEVEL (MOVE TO LFT)
ARM REST HARNESS P/N:832061
LEVELING SWITCH P/N:832004
LEVELING SWITCH (ROPS) P/N:832034
AUTO/MANUAL LEVELING SWITCH P/N:832003
TO INCLINOMETER SWITCH P/N: 332036
HAZZARD LIGHTS P/N:530118
DEUTSCH DT 6 CAVITY PLUG
DEUTSCH DTP 2 CAVITY PLUG
DEUTSCH DT 8 CAVITY PLUG
DEUTSCH DTP 2 PIN SOCKET
DEUTSCH DT SERIES 12 CAVITY PLUG
METRI-PACK 480 SERIES FEMALE CONN DELPHI No: 12131592
Neutral Switch Signal (+) 832002
SEAT SWITCH N/O
HYDRAULIC OIL TEMP SWITCH - 190 DEG N.C. RISING P/N: 832076
TO BATTERY GROUND
HEAD LIGHT P/N: 835027
FUEL LEVEL SENDER P/N: 835028
FUEL PUMP

832075

INSTRUMENT PANEL HARNESS

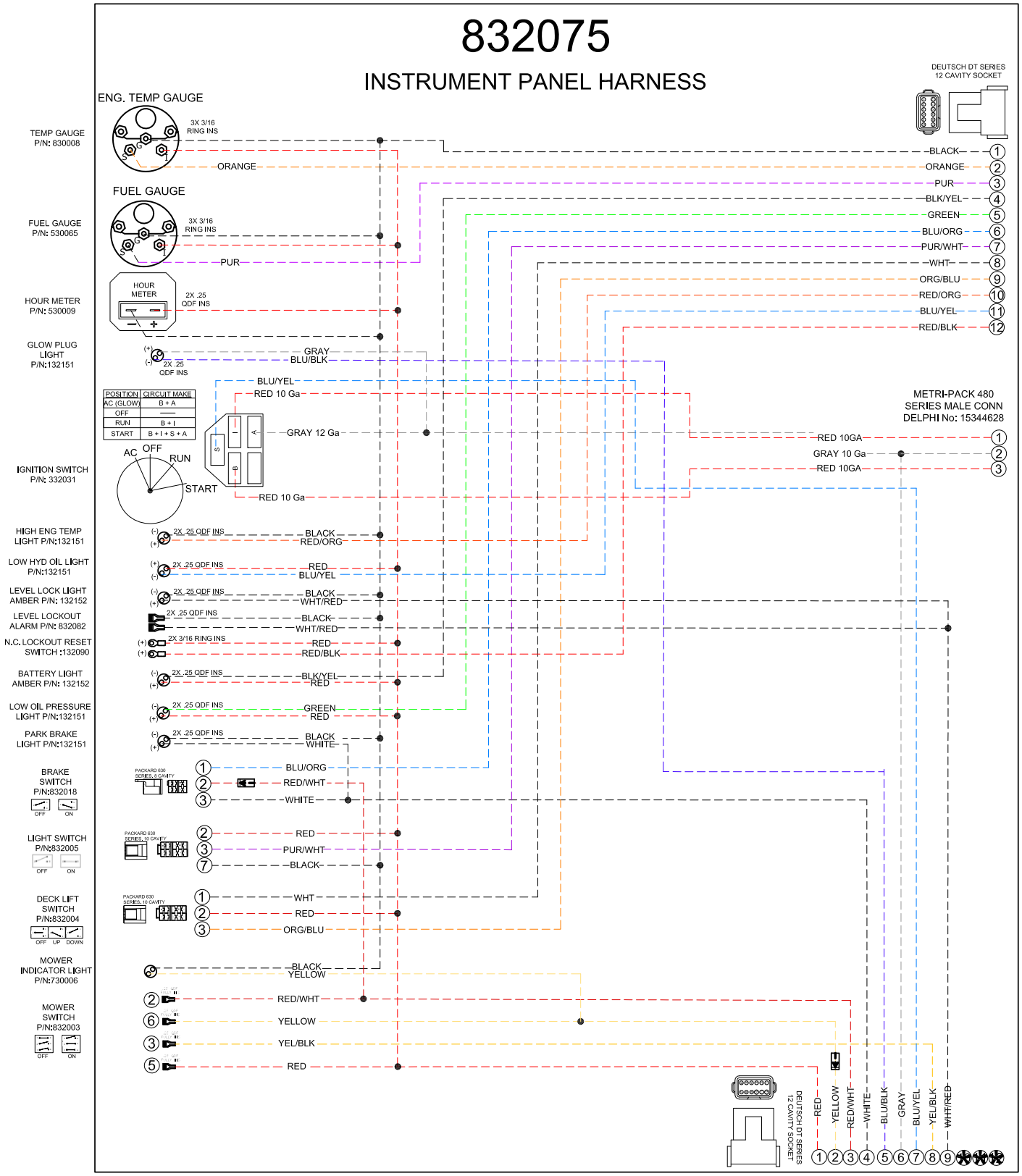

INDICATOR LIGHTS / ALARM

-- ENGINE TEMP LIGHT
--- ILLUMINATES IF ENGINE TEMP EXCEEDS 215 DEG F
-- LOW HYDRAULIC OIL LIGHT
--- ILLUMINATES IF THE HYDRAULIC OIL IS LOW
-- LEVELING LOCKOUT LIGHT & ALARM
--- ILLUMINATES WHEN THE AUTO LEVEL FUNCTION HAS BEEN LOCKED OUT & THE ALARM SOUNDS
-- BATTERY LIGHT
--- ILLUMINATES IF CHARGING SYSTEM VOLTAGE IS LOW
-- ENGINE OIL LIGHT
--- ILLUMINATES WHEN THE OIL PRESSURE DROPS BELOW 7 PSI
-- PARKING BRAKE LIGHT
--- ILLUMINATES WHEN THE PARK BRAKE IS APPLIED
-- GLOW PLUG LIGHT
--- ILLUMINATES WHEN THE KEY SWITCH IS TURNED TO THE PRE-HEAT POSITION
-- MOWER DECK LIGHT
--- ILLUMINATES WHEN THE MOWER BLADES ARE ENGAGED

SAFETY INTERLOCKS / WIRING LOGIC

- TO START MACHINE
-- MUST BE IN NEUTRAL
-- MOWER BLADES MUST BE "OFF"

- TO TURN MOWER BLADES "ON"
-- OPERATOR MUST BE IN SEAT
-- HYD OIL TEMP MUST BE LESS THAN 190 DEG F

- 2 SEC TIME DELAY ADDED TO SEAT SWITCH TO ACCOUNT FOR OPERATOR BOUNCE

- PARK BRAKE IS APPLIED WHEN OPERATOR IS OUT OF SEAT

- LEVELING
-- VALVES ON CYLS ARE OPEN WHEN IN AUTO MODE & MANUAL MODE.
-- IF THE INCLINOMETER SENSES THAT THE MACHINE IS NOT STABLE OR IF THE MACHINE ANGLE HAS CHANGED AT A QUICK RATE, THEN THE VALVES ON THE LEVELING CYLINDERS ARE CLOSED TO LOCK THE MACHINE IN ITS CURRENT POSITION & THE AUTO LEVEL FUNCTION WILL REMAIN UNACTIVE. TO RESET THE AUTO LEVEL FUNCTION, PRESS THE MOMENTARY RESET SWITCH LOCATED ON THE DASH. (THE MANUAL OVERIDE SWITCHES WILL STILL LEVEL THE MACHINE WHEN THE AUTO LEVEL FUNCTION IS LOCKED OUT.)

Options

WHEEL WEIGHT KIT

P/N: 801004 - CUSTOMER INSTALL
P/N: 801005 - FACTORY INSTALL

Parts List			
ITEM	QTY	PART #	DESCRIPTION
1	16	110610	NUT, 1/2-13
2	4	110646	Washer, 2.25 X .5 X 7 Ga Flat
3	4	110662	Washer, 1/2 X 1.25 X 3/16
4	8	110666	WASHER, 1/2" LOCK
5	8	111158	Bolt, 1/2-13 X 8 in Carriage
6	2	812009	Wheel Weight, 70#, Black

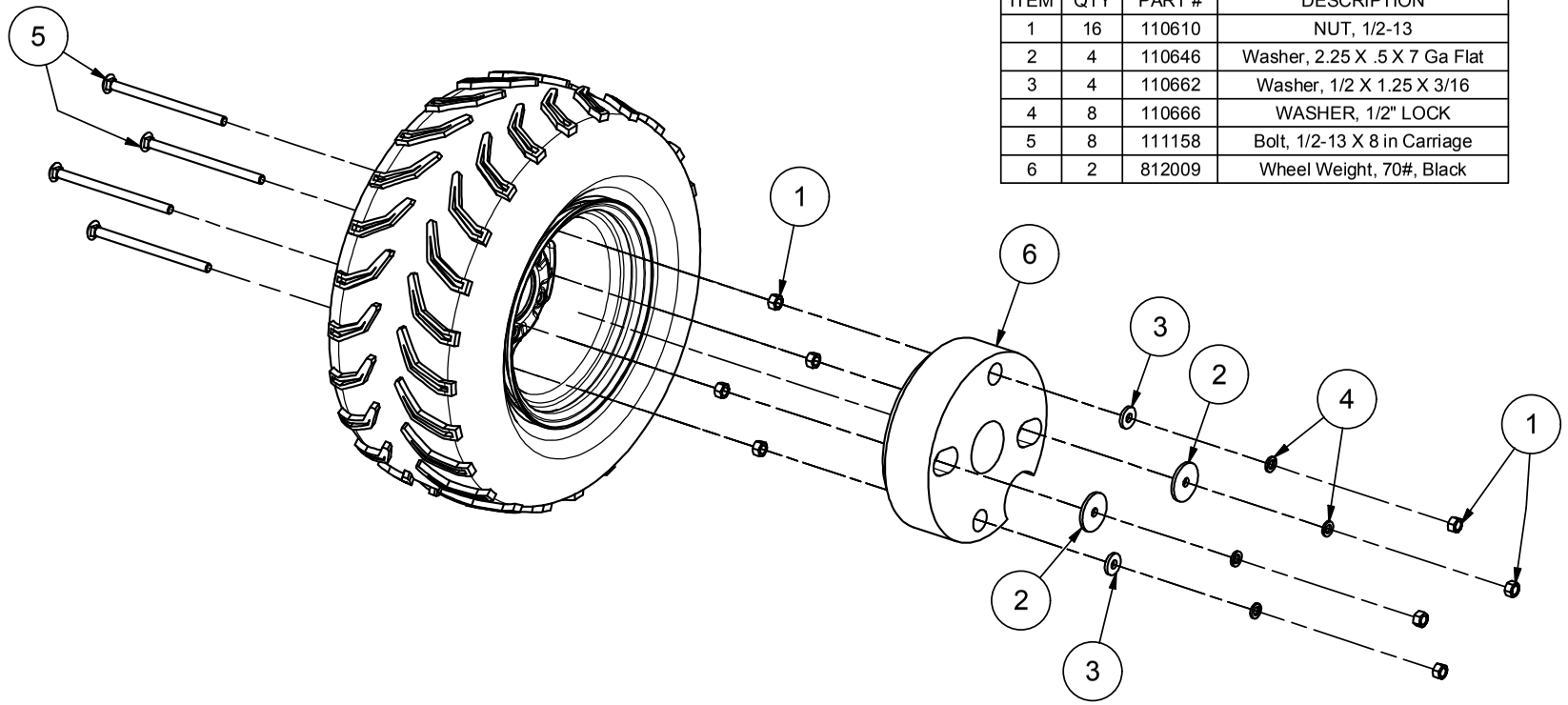

4/30/2019