HARPER®

ATM 72

Operator's Manual

HARPER® INDUSTRIES, INC.

7/13 Part No. 500329

Thank you for purchasing a Harper ATM 72.

TO THE OWNER OR OPERATOR:

Please take time to read this manual carefully before operating the ATM 72. Each operator should be familiar with all safety precautions along with the operating and service procedures. Knowledge and familiarity will make a difference in how the machine performs.

As with all Harper products, the ATM 72 was developed through tough design and testing procedures to produce a sturdy, dependable machine. This manual gives assembly and operating information. Read and understand all instructional materials included with the unit and its components before operating or maintaining the equipment.

An All-Terrain Mower can present hazards to an operator who follows unsafe procedures in either the operation or maintenance of the unit. Therefore, **SAFETY WARNINGS** are present at certain locations in the text.

SYMBOL: ⚠ **SAFETY WARNING!** ⚠

MEANING: Failure to understand and obey this warning may result in injury to you or others. Whenever this symbol is used, please pay very close attention to the information presented, and make sure you fully understand. If you do not, contact your dealer or Harper Industries for clarification.

⚠ **SAFETY WARNING!** ⚠

All shields and guards must be in place for proper and safe operation of this equipment. Where they are shown removed in this manual, it is for purposes of illustration and instruction only. Do not operate this equipment unless all shields and guards are in place.

CALIFORNIA
Proposition 65 Warning
Diesel engine exhaust and some of its constituents are known to the State of California to cause cancer, birth defects, and other reproductive harm.

© 2013 Harper Industries, Inc.
The Harper and DewEze names and the ATM logo are registered trademarks of Harper Industries, Inc. All other brand and product names are trademarks or registered trademarks of their respective companies.

LIMITED WARRANTY

The Harper ATM 72 is warranted against defects in workmanship and materials for a period of one (1) year from the original date of retail purchase to the original purchaser.

Harper Industries will repair or replace, at its own option, any part that evaluation shows to be defective. Warranty is limited to parts, labor and ground freight delivery of replacement parts. The user will pay freight charges for expedited orders of replacement parts and/or parts submitted for warranty evaluation. No product or part may be returned for warranty evaluation without prior approval.

This warranty does not apply to parts subjected to misuse, abuse, alteration, improper or inadequate maintenance, or normal wear (including belts, blades and tires).

Diesel engines are not covered under this warranty. Refer to manufacturer's warranty for specific warranty information. Harper Industries makes no warranty with respect to trade accessories. They are subject to the warranties of the manufacturer.

RECORDS

Date of Purchase _____ / _____ / _____

Dealer's Name _____

Dealer's Phone _____

Serial Number Machine _____

Serial Number Engine _____

Table of Contents

OPERATOR SECTION
To the Owner or Operator..... 1
Warranty Statement..... 2
Table of Contents..... 3
Specifications..... 4
Introduction
- Starting..... 6
- Deck Service Mode..... 6
- Cutting Height..... 6
- Lubrication..... 6
- Tow Valve..... 7
- Auto Leveling..... 7

Control Identification..... 8
General Safety Guidelines
- Equipment & Controls..... 9
- Guards & Shields..... 9
- Replacement Parts..... 9
- Before Operation..... 9
- During Operation..... 9
- After Operation..... 10
- While Traveling Roadway..... 10
- Safety Decals..... 10
- Hydraulics..... 10

Operation
- Before Starting Unit..... 11
- Driving the ATM 72 LC..... 11
  - Guidelines..... 11
  - Operating Tips..... 11
- Parameters for Cutting Grass..... 12

Adjustments
- Deck Lift Adjustment..... 13
- Seat Adjustment..... 13
- Tow Valve..... 14
  - Tow Valve Location..... 14
  - To Open Tow Valve..... 14
- Level Adjustment..... 15
- To Adjust Mercury Switches..... 15
- Neutral Adjustment..... 16

Service Parts/Points
- Filters..... 17
- Belts..... 17
- Blades..... 17
- Tires and Wheels..... 17
- Hydraulic Breather..... 18
- Hydraulic Filter..... 18
- Yanmar Engine - Right Side..... 18
- Propulsion Pump..... 18

Service Schedule..... 19

Specifications

Engine	**Yanmar 3TNV82A**
Number of Cylinders	3
Bore x Stroke in (mm)	3.23 x 3.31 (82 x 84)
Displacement cu. in / (cc)	81.22 / (1331)
Compression Ratio	18.0:1
Lubricating System	Forced / Trochoid pump
Cooling / Capacity	Radiator / 1.5 gal. (5.7 liters)
Firing Order	1-2-3
Engine Rotation	Counterclockwise (when looking at flywheel)
Output net hp / (kW)	29.4 / (21.9)
Output gross hp / (kW)	30.2 / (22.5)
Torque	85 lb. Ft (115 Nm) @ 1600 rpm
Starter	12 V HITACHI
Alternator	12 V / 40 A
Idle Speed	700 rpm
Max. Speed	3000 rpm, (EPA Rating)
Fuel	**#2 Diesel**
Capacity gallons / (liters)	13.8 / (52.3)
Injection	Direct
Flow Rate	1.47 in^3/stroke, (24.1 mm^3/stroke)
Filter, Primary	Yanmar #119802-55800
Oil	**15W-40, API Classification CE/SF** (10W-40 BElow 40° F {19° C})
Capacity (liter)	5.5 Liters / 3.6 Liters (Dipstick upper limit / lower limit)
Oil Pressure, Hot	3.6 PSI (248.22 kPA) at 3000
Oil Pressure, Idle	14.5 PSI (99.97 kPA)
Pressure Relief Valve	37.7 - 46.4 PSI (259.94 - 319.92 kPA)
Filter / Interval	Yanmar #129150-35151 / 100 hrs.
Hydraulic System	
Capacity	8 gal. / (30.28 liters)
Propulsion Pump	Oil gear 1.35
Wheel Drive	Ross ME29
Steering	Ross /TRW/HFG
Deck Drive MTR	Parker gear pump
Blade Tip Speed	18,613 ft. per min.
Deck Drive Pump	Barnes gear pump
Charge Pump	Oil gear .61
Motor Oil	10W- 40 – (S.A.E. J183)
Hoses	12,000 PSI (82,740kPA) bursting pressure
Hot Oil Shut Down	230ºF (114ºC)

Hydraulic Filters	
Return (10 Micron)	DewEze 822002
Propulsion Pump Filter	DewEze 220559
System Pressures	
Deck	3000 PSI (20,685 kPA)
Propulsion	3750 PSI (25,856 kPA)
Leveling/ Steering	1200 PSI (8,274 kPA)
Accumulators	½ pt @475 PSI Charge (.473 liters@3275@kPA)
Tires	
Drive	Bear Claw 25x12.5 –12 Inflate to 10-16 PSI (68.95 – 110.32 kPA) Filled with 60oz. Tire Sealant
Stabilizer	Carlisle 16.5 x 8.5 – 8 *Note: This tire must be filled with foam for proper operation of leveling system.*
Deck Caster	**Carlisle 11x 4-5 (foam filled)**
Weight	**2225 lbs. / (1000926 kg.)**

Tested Against ANSI / OPEI STandards B71.4-1990

Introduction

The objective of Harper Industries in designing the **ATM 72** was to create a mowing machine that could function safely and comfortably on slopes and inclines. The result is an All-Terrain Mower that will automatically adjust itself to keep the operator in a vertical position on all slopes up to 34 degrees.

Driving with an automatic leveling device will be a new and different experience. After several minutes of driving, the smooth control and sturdy feel will become comfortable to you. The security of always sitting upright and the feel of powerful, positive traction will give you confidence and comfort in most mowing situations. However, we urge EXTREME CAUTION lest your confidence in these features get you into trouble.

REMEMBER: The features of the ATM 72 cannot replace good common sense.

Operating Guide

Starting

- Mower may be leaning after setting for a period of time, from internal hydraulic leakage. This will not affect operating leveling during mowing operations.
- COLD WEATHER starting: Turn key to Pre-heat, light on dash will light, hold until the light goes out, then start. The engine is designed for easy starting above 32°. Do not run starter for more than 15 seconds at a time or damage may occur to the fuel solenoid and starter motor.
- Engine will shut down if hydraulic oil over-heats, and will not start until cooled down.

Deck Service Mode

- Turn Auto Level OFF.
- With Manual Override switch, lean mower to right or left.
- Close the ball valve located on the leveling cylinder on the side the mower is leaning towards.
- Switch the Auto Level ON, or push the manual switch toward the deck to raise.
- Deck will raise.
- Turn engine OFF.
- Block deck up before working under the deck.

Cutting Height

- Adjust center of decks with the toggle switch on dash, raising the decks to maximum height.
  Adjust the pins and bushings at front and rear of center deck adjustments, up or down to desired height. By turning the bushings upside down, adjustments can be made in ½" increments.
- Adjust the front castor wheels on each deck with the hand cranks, to correspond with the change made on center deck.
- Adjust outer decks by moving the pins and bushings; can be adjusted in ½" increments.

Lubrication

- GREASE DAILY:
  Castor wheels
  Steering cylinder
  Stabilizer arms
  Vertical Adjusting Shafts, outer decks
- ENGINE:
  50 Hours on new engine:
  Change oil and filter.
  100 Hours, after initial change:
  Change oil and filter.

Tow Valve

- Opening the Tow Valve (under cowling, left side) allows the mower to be moved by pushing or towing a short distance without starting engine.

NOTE: If Tow Valve is left open, mower will operate, but have little propulsion power.

Auto Leveling

- Set Parking Brake.
- Run engine at full throttle.
- Set auto Level Switch ON.
- Lean mower to left with Manual Override Switch. Release Manual Override switch.
- If mower does not return to vertical, turn LEFT adjusting screw Counter-Clock-Wise.
- If mower returns past vertical, turn LEFT adjusting screw Clock-Wise.
- Follow same procedure for right side leveling, adjusting the RIGHT adjusting screw.
- Adjust leveling so that mower returns to approximately 2 degrees from vertical, from left and right.

Control Identification

Hydraulic Reservoir
(located under hood at front of mower)

Tow Valve & Neutral Safety Switch
(located behind cowling and above propulsion pump)

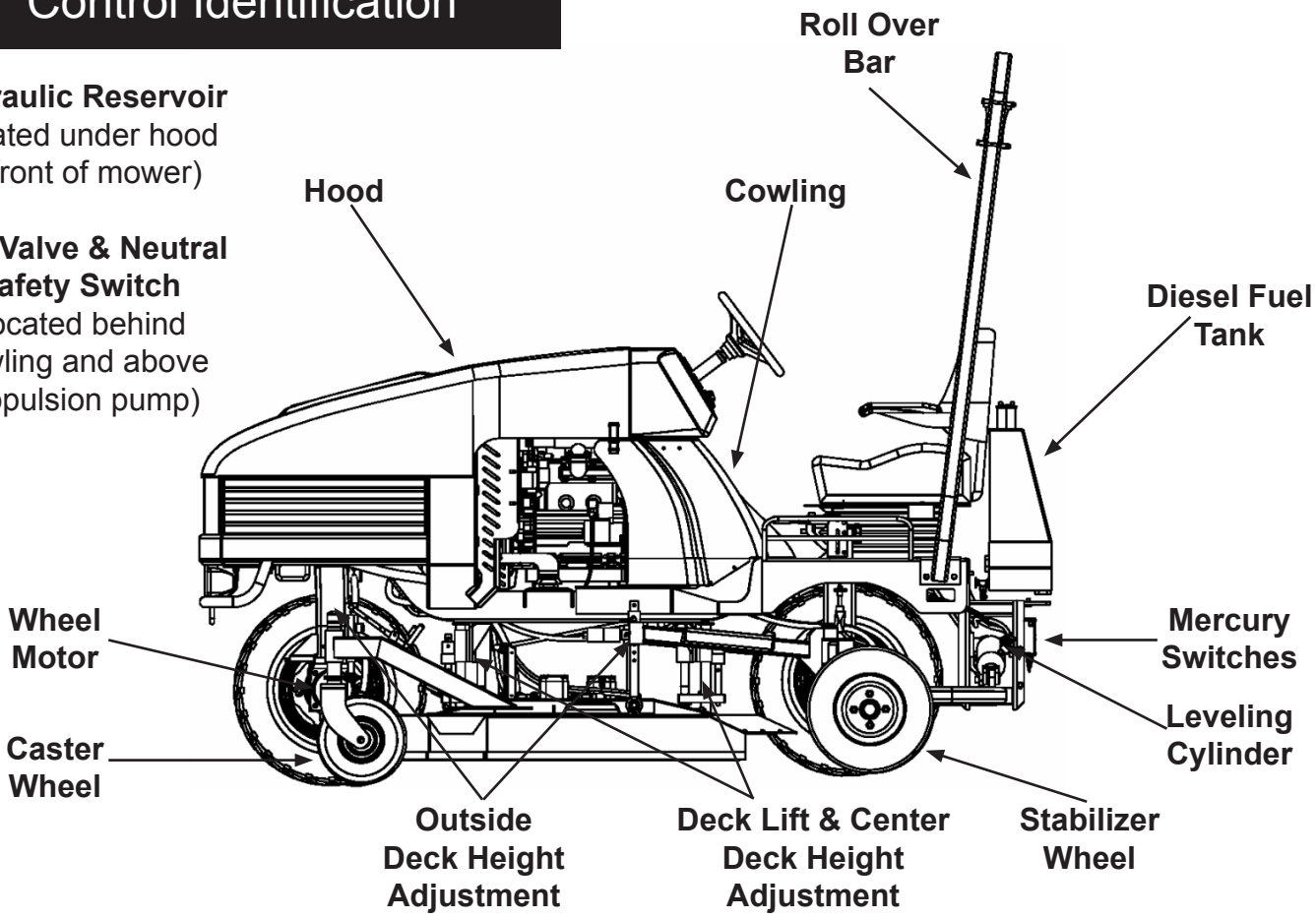

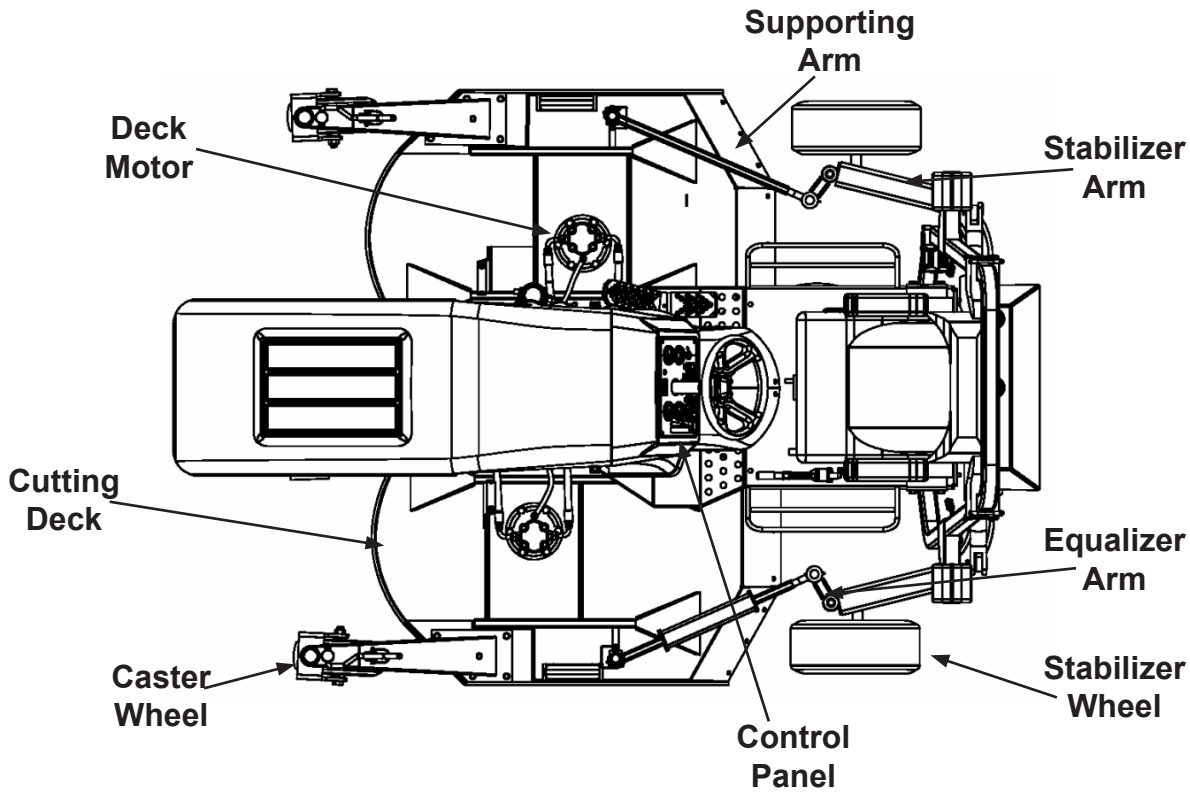

General Safety Guidelines

Equipment & Controls

- Before operating this equipment, read and understand the Operator's Manual.
- Altering the unit in any way that adversely affects its safe operation, performance or durability will void the warranty and may cause hazardous conditions.
- Know the location and function of all controls and how to stop the equipment quickly in an emergency before you operate the unit.
- Keep all bolts, screws and fittings tight to ensure safe operation of equipment.

Guards & Shields

- Keep all safety devices in place and in good operating condition.
- Replace all worn, damaged, unusable, missing or lost safety shields and guards before operating unit.

Replacement Parts

- Use genuine factory parts or parts with equivalent characteristics including: type, strength and material.
- Replace locknuts and locking screws if they can be tightened without considerable resistance for several turns before they are completely tight.
- If hardware is not secure, or if fasteners are over-tightened, equipment failure may result posing possible safety hazards.
- Use proper torque specifications for all fasteners when they are replaced.

SAFETY WARNING!

Failure to use genuine factory parts may result in voidance of warranty, product malfunction or possible injury.

Before Operation

- Before starting the machine, visually inspect all nuts, bolts and other fasteners to see that they are properly secured.
- Nuts, bolts, screws and fittings should be inspected after the first hour of operation and every 8 to 10 hours there after for proper tightness.
- Make sure all belts and hoses are in good condition. Replace if necessary.
- Clear all foreign objects such as rocks, bottles or other hard materials that lay in the area to be mowed.

During Operation

- While operating the equipment, make sure that no foreign objects such as rocks, bottles or other hard materials pass under the deck of the mower.
- If an object should strike the blades causing an unusual noise or vibration, shut the engine off immediately and allow it to come to a complete stop. Take all prescribed safety precautions and do the following:
  1) Inspect for damage.
  2) Check for wire or string around the blades
  2) Repair or replace damaged parts.
  3) Tighten any loose fasteners or parts.
- Keep the engine area clean and free of debris and other accumulations.

After Operation

- Park in a level area, return hydrostat control to the neutral position and turn engine off (park brake will set).
- Remove key from ignition, lock doors and store key in a safe location.

While Traveling Roadway

- Raise deck, add spacers, and lock deck wings with safety chains before entering roadways.
- Turn on hazard lights and use turn signal when making turns. Use strobe to give additional alert to others when traveling or working alongside road ways.

Safety Decals

- If safety related or instructional decals become illegible or are removed, replace them immediately.
- If parts are replaced, make sure all safety related or instructional decals are present before the equipment is operated again.
- New decals may be obtained from your local Harper Dealer.

Hydraulics

To prevent serious injury or death:

- Relieve pressure on system before repairing, adjusting or disconnecting any hydraulic hose or fitting.
- Wear proper hand and eye protection when searching for leaks.
- Use wood or cardboard instead of hands when looking for leaks.
- Keep all hoses, fittings and components in good repair.
- Do not use any type of heat or flame (welding, soldering, cutting torch, etc.) near pressurized hydraulic lines.

SAFETY WARNING!

HIGH-PRESSURE FLUID HAZARD!
Escaping fluid under pressure can penetrate skin causing serious injury or death.

SAFETY WARNING!

Always keep a fire extinguisher with the ATM 72 during operation and service.

Diesel Fuel

- Always use an approved container for transporting diesel fuel.
- Do not allow open flames or sparks while performing maintenance or refueling.
- Never remove fuel tank cap or add fuel when engine is running or while it is hot.
- Only use ultra low sulfer diesel.
- Never fill fuel tank indoors. Fumes are heavy and will sink to the lowest point, collect and become hazardous.
- Wipe up spilled fuel immediately.
- Do not store fuel in a room with an appliance that has a gas pilot or electrical switch that may cause sparks.
- Always store diesel outside in a safety can (a can with flame arrestor and pressure relief valve in pour spout).
- Never store the equipment with fuel in the tank inside a building where fumes may reach an open flame or spark.
- Allow the engine to cool before storing in any enclosure.
- Be certain to provide adequate ventilation if an engine must be run indoors exhaust fumes are dangerous.

SAFETY WARNING!

Diesel fuel is extremely flammable and can be highly explosive.

SAFETY WARNING!

To prevent possible eye injury, always wear SAFETY GLASSES while operating or servicing the equipment.

Operation

Before Starting Unit

- Clear all foreign objects such as rocks, bottles or other hard materials that lay in the area to be mowed.
- Follow all procedures prescribed in the Maintenance section.
- Fill with #2 diesel fuel, if needed, while engine is cool.
- Visually check tires (10-12 psi).
- Visually inspect machine for loose fittings, fasteners, hoses, etc.
- Adjust seat to a comfortable position.
- Fasten safety belts.

SAFETY WARNING!

To prevent possible eye injury, always wear SAFETY GLASSES while operating or servicing the equipment.

Driving the ATM 72 LC

Driving the DEWEZE ATM 72 LC with the automatic leveling device will be a new and different experience. After several minutes of driving, the smooth control and sturdy feel will become comfortable to you. The security of always sitting upright, and the feel of powerful, positive traction will give you confidence and comfort in most mowing situations. We urge **EXTREME CAUTION** lest your confidence in these features get you in trouble. **REMEMBER:** The features of the machine cannot replace common sense.

SAFETY WARNING!

Auto level will not work is steering wheel is held against stop during extreme left or right turns.

Guidelines

1. Take some time to get used to the handling characteristics of the machine.
2. Always look before backing up.
3. SLOW DOWN over rough terrain.
4. DO NOT make sharp turns at high speeds.
5. Always keep your feet on the footrests while operating the machine.
6. Never attempt to operate the machine when it is malfunctioning.
7. Use extra caution when mowing slopes greater than 34 degrees. (see DewEze ATM Slope Capability on next page)
8. Turn up hill when maneuvering on a hill.
9. If it is necessary to park the mower on a hill, be sure to USE THE PARKING BRAKE AND CHOCK THE WHEELS!
10. Wear appropriate, protective clothing while operating the mower.
11. NEVER ALLOW PEOPLE IN THE AREA YOU ARE MOWING!
12. Always avoid mowing over debris that could be projected from the mower dis charge or do damage to the machine or anything in the area.
13. FOR BEST RESULTS OPERATE THE MOWER ENGINE AT FULL THROTTLE. This will allow the blades to turn at optimum speed, and the leveling device to be the most responsive.
    Forward speed is easily controlled with the foot control pedal.
14. Slow down when turning on a hill. Fast turns may not allow the leveling system to function properly.
15. Before dismounting, turn off the blades. Place foot control in neutral position and set parking brake.
    Stop engine and remove ignition key.

Operating Tips

1. Read Safety Decals
2. Always check engine oil and hydraulic oil levels before starting.
3. Make sure you have plenty of fuel.
4. Visually check the tires.
5. Adjust seat to comfortable position.
6. Always use good judgement when using this machine.
7. Always wear safety belts.

Parameters for Cutting Grass

The principal objective when mowing is to achieve the highest quality cut with the greatest efficiency. However, there are many environmental conditions that work to diminish the capacity of the machine to achieve this goal. The variables include: type, density, length and moisture content of the vegetation. When determining the proper way to cut grass, each of these variables must be given serious consideration.

The operator is able to make adjustments that will increase the cutting efficiency of the machine. These adjustments include: deck height, ground speed and blade sharpness. Blades should be sharpened on a regular basis to improve cut and reduce resistance. Deck height and ground speed should be determined based on environmental conditions.

The highest quality of cut can usually be achieved by removing only 1/3 of the plant when the initial length is 9” or less. Mowing taller or extremely dense grass while using a low deck height setting will cause material to build up under the deck faster than it can be ejected. This build up can create enough resistance to slow the tip speed of the blade, causing a drastic reduction in cut quality. The configuration of the hydraulic system that powers the deck motors will exhibit stress in the left deck motor first. Deck height or mower speed should be adjusted when the right deck begins to out perform the left deck. This may occur without noticeable change in engine speed.

Certain situations may require two cuts with different deck heights and or a slower ground speed to achieve the desired cut quality. When a better looking finish cut is desired, making two passes in tall grass can dramatically improve the quality of the cut. The deck should be raised on the first cut to near maximum height to allow grass to escape freely. The deck should then be lowered to the desired height to make the final cut.

Adjustments

Deck Lift Adjustment

With motor running use the deck lift switch to obtain the desired center height.

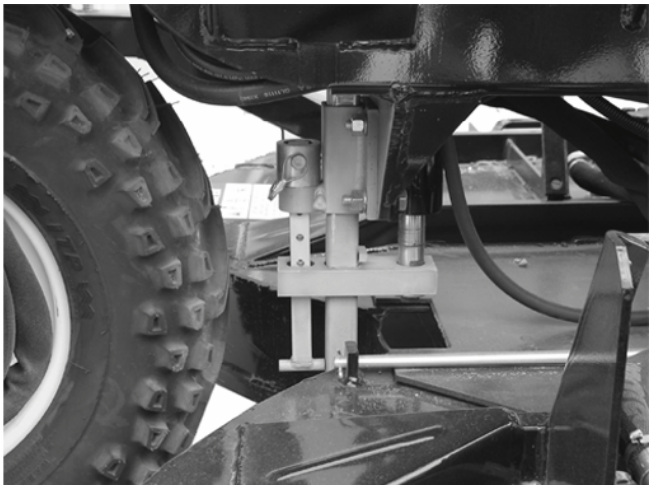

When the deck is at the desired center height, set the pin and bushing in the closest hole and let the deck down so that it rests on the stops.

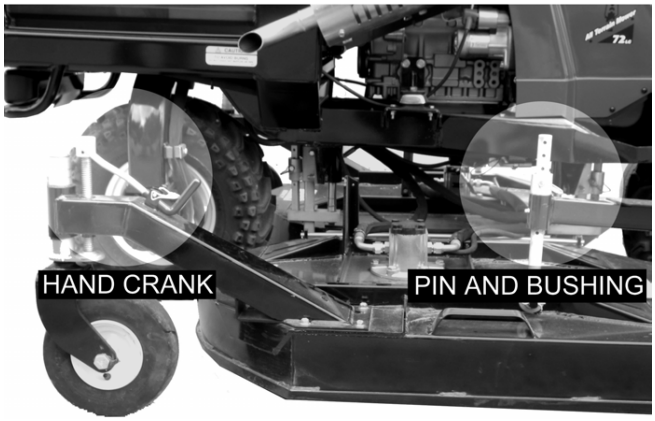

Set the outside deck height using the pin and bushing and the hand crank. Set the pin and bushing to the correct height and then turn down the hand crank so that it will carry some of the load.

IMPORTANT

WHEN DONE CHANGING DECK HEIGHT ALWAYS REPLACE HAND CRANK PIN AND ALL BUSHING PINS.

Seat Adjustment

1. The lever with the yellow handle controls the chair's horizontal movement.
2. The round knob adjusts the ride quality. Turn the knob clock-wise for a firmer ride, and counter-clockwise for a softer ride.

Adjust the screw to change the angle of the arm rests.

Adjust safety tether to allow proper seat travel and maintaining adequate safety.

Tow Valve

IMPORTANT

THE TOW VALVE MUST BE OPENED BEFORE THE UNIT IS TOWED TO AVOID DAMAGE TO THE HYDRAULIC PUMPS.

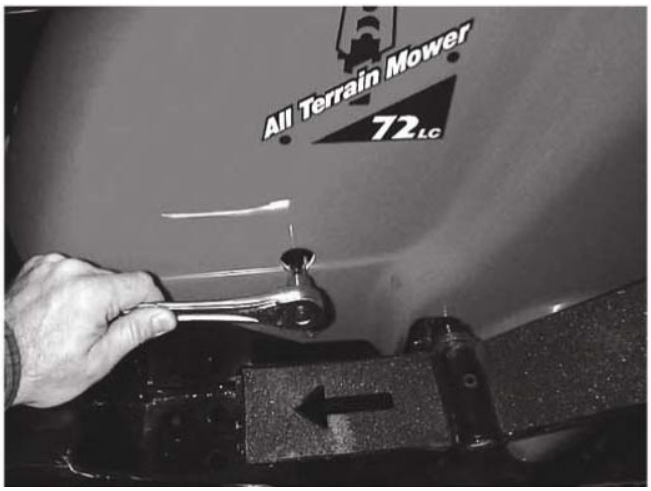

Tow Valve Location

The Tow Valve is located behind the right front cowling. The Tow Valve is accessible for adjustment through a small hole located in the cowling for this purpose.

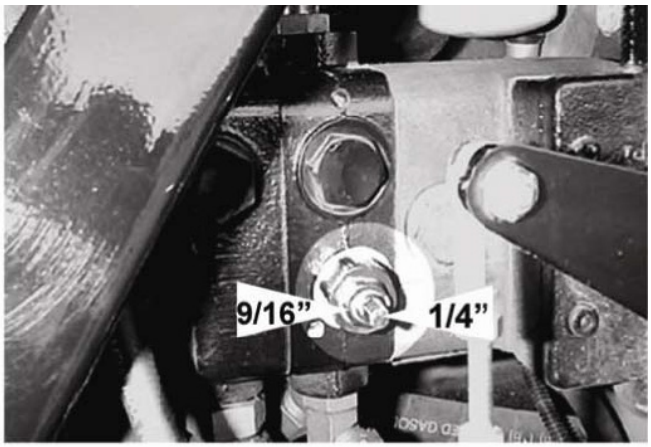

To Open Tow Valve

1. Loosen the 9/16” locking nut.
2. Turn the 1/4” hex counter-clockwise a minimum of 2 full turns to ensure complete hydraulic system bypass.

IMPORTANT

TOWING OR PUSHING MOWER AT MORE THAN ONE MPH, WITH TOW VALVE LOSED, FOR MORE THAN 50 YARDS MAY CAUSE SERIOUS DAMAGE TO THE HYDRAULIC PUMPS AND MOTORS.

NOTE: Always close the TOW VALVE before normal operation! If tow valve is left open the mower will operate but have little propulsion power.

Level Adjustment

The Manual Override Switch is located at the roll bar on the right hand side of the operator.

Note: The Manual Override Switch is the rear switch (see picture).

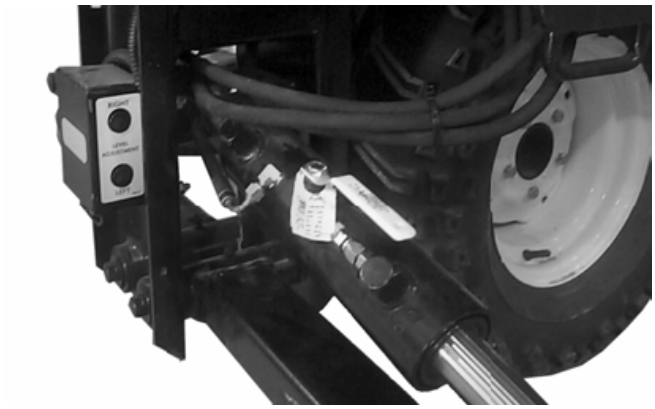

The box at the rear of the mower encloses the mercury switches that keep the machine level when the automatic leveling switch is on.

To Adjust Mercury Switches

Mower should be on level ground with the parking brake set, auto-level switch on, and engine at idle. Remove the two plastic covers from the mercury switch box.

1. Use manual over-ride switch to lean the mower to the right; release the switch and let the mower level itself.

- If the mower does not reach a vertical position, and is still leaning some to the right, turn the RIGHT adjusting screw counter-clockwise and repeat No. 1 procedure. Continue this adjustment until mower returns to vertical position.
- If mower passes vertical position, leaning some to the left, turn the RIGHT adjusting screw clockwise slightly and repeat No. 1 procedure. Continue this adjustment until mower returns to vertical position.

2. Use manual over-ride switch to lean the mower to the left; release the switch and let the mower level itself.

- If mower does not reach vertical position, and is still leaning some to the left, turn the LEFT adjusting screw counter-clockwise slightly and repeat No. 2 procedure. Continue this adjustment until mower returns to vertical position.
- If mower passes vertical position, leaning some to the right, turn the LEFT adjusting screw clockwise slightly and repeat No. 2 procedure. Continue this adjustment until mower returns to vertical position.

Neutral Adjustment

If the machine creeps forward or backward when pedal is in neutral position, the neutral adjustment must be made.

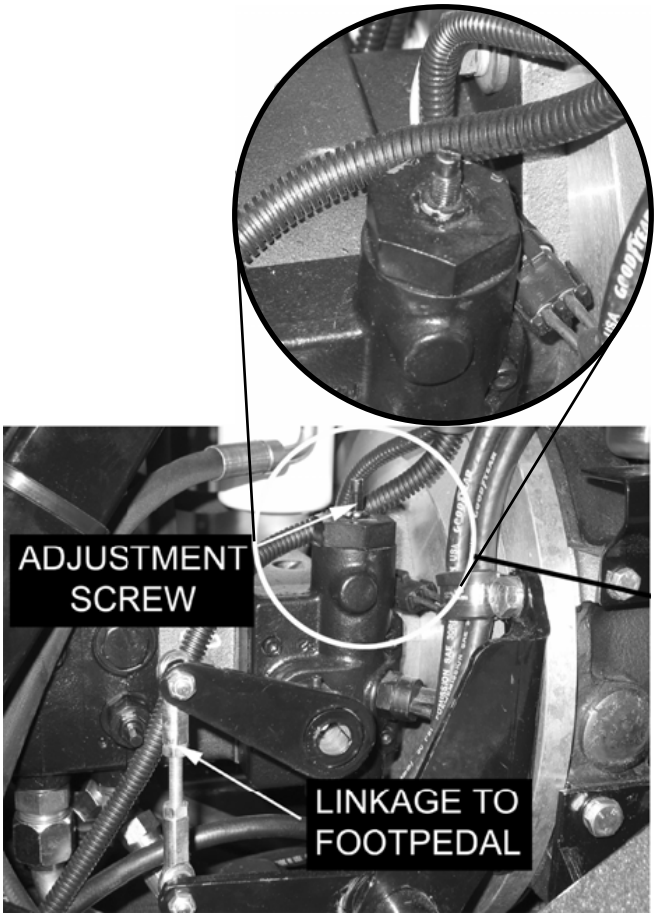

To Adjust

1. Remove the right side cowling. (The neutral adjustment is located behind the cowling and above the propulsion pump)
2. Position the screw on top of the neutral adjustment to the place where the mower does not creep forward or backward while in neutral.

Service Parts/Points

Filters

Engine Air Filter.....Deweze # 840027
Engine Oil Filter.....Deweze # 820220
Engine Fuel Filter.....Deweze # 842012
Engine Fuel/Water.....Deweze # 852003
Hydraulic Return Filter.....Deweze # 822002
Propulsion Pump Filter.....Deweze # 822031
Hydraulic Tank Vent Filter.....Deweze # 822018

Belts

Fan/Alt. Belt.....Deweze # 840038

Blades

Blade Set (Right) Swinging.....Deweze # 500269
Blade Set (Left) Swinging.....Deweze # 500268
Bolt Kit (Swinging) 1 Deck.....Deweze # 500319
Blade Set (Right) Shear bolt.....Deweze # 500271
Blade Set (Left) Shear bolt.....Deweze # 500270
Bolt Kit (Shear Bolt) 1 Deck.....Deweze # 500320

Tires and Wheels

Stabilizer Wheel Assy.....Deweze # 800057
Caster Wheel Assy.....Deweze # 800093
Drive Tire.....Deweze # 800114
Drive Wheel (Rim).....Deweze # 500181
Drive Tire and Wheel Assy.....Deweze # 800126

Hydraulic Breather
Change breather whenever hydraulic filter is serviced.
Breather part number: 822018

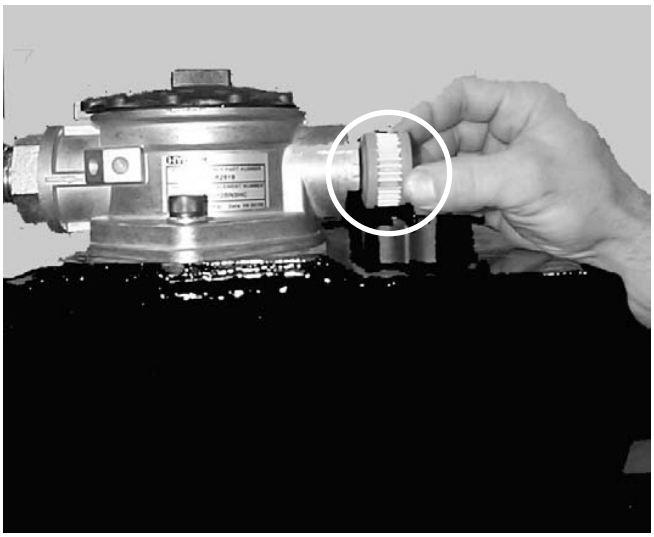

Hydraulic Filter
Change hydraulic filter whenever filter indicator needle runs in the red area.
NOTE: Check gauge when oil is at operating temperature.

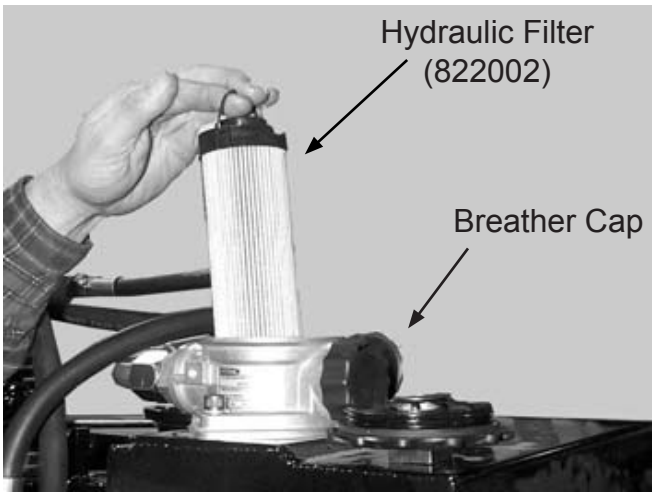

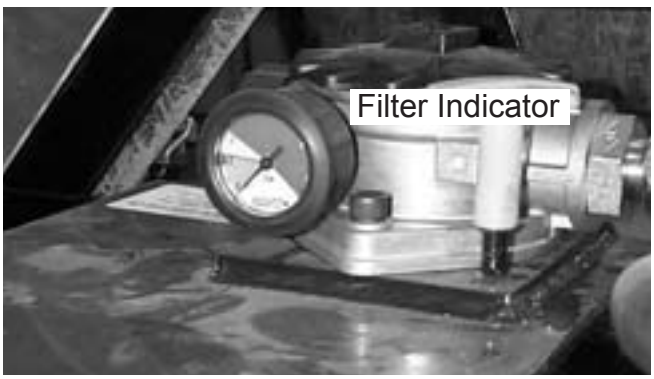

Yanmar Engine - Right Side

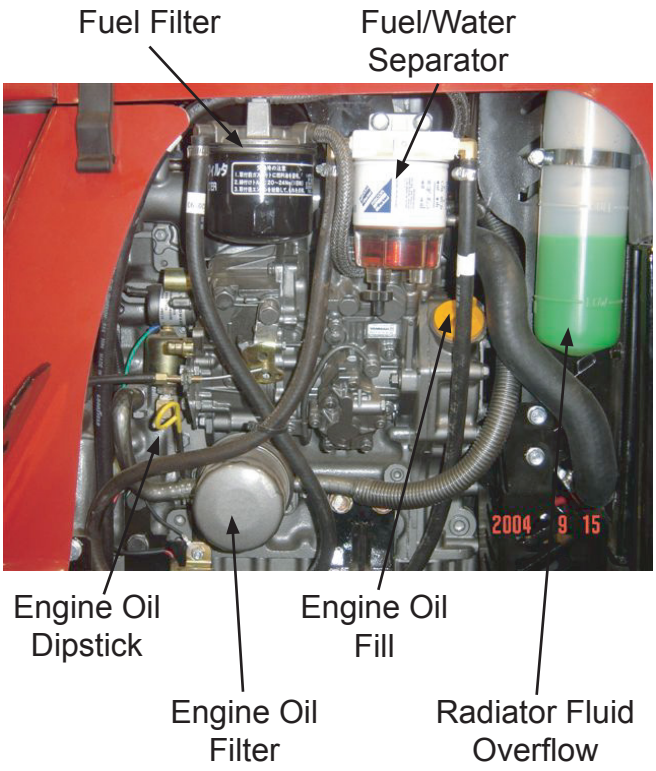

Propulsion Pump
For access to the propulsion pump filter, the left hand cowling must be removed.

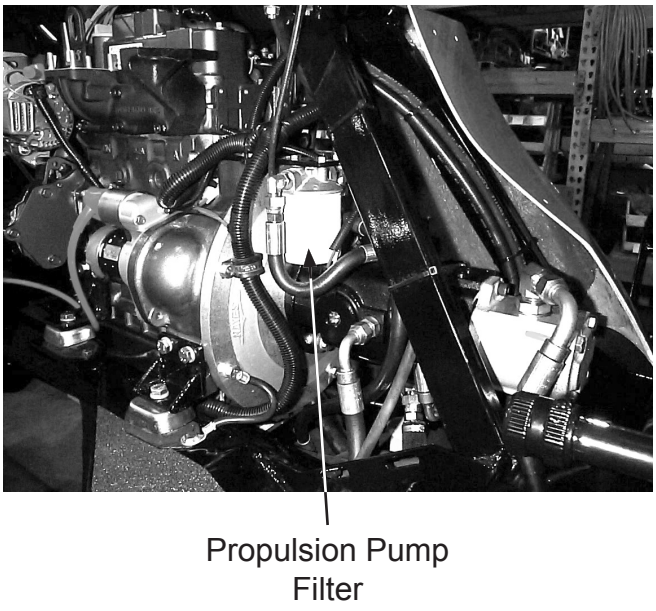

Service Schedule

Disclaimer-On engine applications YANMAR Diesel Engine Co. recommends the following:

Daily

Check Engine oil level..... Use HD 15-40, HD 10-40 if below 40°F (19°C)
Check Hydraulic oil level..... Use HD 15-40 or HD 10-40 motor oil
(HD 15-40 SUPPLIED FROM FACTORY)
Check fuel level..... Use Clean #2 Diesel
Visually inspect .....Fan Belt, bolts, fittings, and hoses
(for signs of leaks or looseness)
Check Coolant Level..... Between Low and Full, 50% Ethylene glycol
Grease.....refer to page 3.2

50 Hour Service- These and all previous items

Air Filter ..... Clean or replace Yanmar 129087-12510
Check Tire Pressure ..... 10-16 PSI (6.9KPa-11Kpa) Drive tires
Change Engine Oil..... 5.5 liters dipstick upper limit/3.6 liters dipstick lower limit
Change Engine Oil Filter ..... Yanmar 129150-35151/ Deweze 820220

100 Hour Service-These and all previous items

Change Engine Oil..... 5.5 liters dipstick upper limit/3.6 liters dipstick lower limit
Change Engine Oil Filter ..... Yanmar 129150-35151/ Deweze 820220
Check Serviceability of Battery

200 Hour Service-These and all previous items

Clean Fuel Filter according to Yanmar manual
Drain Fuel / Water Separator
Adjust Fan Belt Tension to Yanmar Manual

250 Hour Service

Change Propulsion Pump Filter..... Deweze 822031

400 Hour Service-These and all Previous items

Replace the Fuel Filter.....Yanmar 119802-55800 / Deweze 842012
Check Fuel Injection Condition to Yanmar manual
Check Fuel Injection Timing to Yanmar manual
Adjust the intake and Exhaust valve clearances to Yanmar manual

1000 Hour Service or Annual Service-These and all previous items

Change Hydraulic Oil ..... 8 gallon/ (30.28 liters)
Change Engine Coolant ..... 1.5 gallon/ (5.7 liters)
Repack stabilizer wheels.....Use a high quality bearing grease
Check the Fuel Injection Pump to Yanmar manual

Parts with asterisk mark "*" should be serviced by an authorized YANMAR Dealer, unless the owner has proficient mechanical ability and the proper tools

NOTES

Harper Industries, Inc.
151 E. Highway 160
Harper, KS 67058

Telephone: 620-896-7381
Toll-Free: 800-835-1042
Fax: 620-896-7129

Website: www.harperindustries.com

E-mail: info@harperindustries.com

© 2012 Harper Industries, Inc.
All rights reserved. Printed in U.S.A.

All Terrain Mower®
72LC

HARPER®

ATM 72

Parts Manual

HARPER® INDUSTRIES, INC.

7/13 Part No. 500329 S/N 04A41 and above

Table of Contents

Parts Section

Frame & Assemblies
- Rear Assembly..... 1.1
- Rear Wheel & Brake Assembly..... 1.2
- Foot Pedal..... 1.3
- Front Steering Assembly..... 1.4
- Fuel Tank Assembly..... 1.5
- Deck Lift..... 1.6
- Stabilizer Assembly..... 1.7
- Deck Assembly..... 1.8
- Hood & Screens..... 1.9
- Cowling & Dash..... 1.10

Hydraulic Systems
- Hydraulic Schematic..... 2.1
- Propulsion Pump System Schematic..... 2.2
- Leveling System Schematic..... 2.3
- Deck Lift System Schematic..... 2.4
- Deck Drive System Schematic..... 2.5
- Steering System Schematic..... 2.6
- Hydraulic Valve Service Parts..... 2.7
  - Deck Valve
  - Lift Valve
  - Leveling Valve
- Hydraulic Cylinder Parts..... 2.8
  - Front Deck Lift Cylinder
  - Rear Deck Lift Cylinder
  - Leveling Cylinder
  - Steering Cylinder
- Deck Drive System..... 2.9
- Deck Lift Hydraulic Assembly..... 2.10
- Propulsion Hydraulics Assembly..... 2.11
- Propulsion Pump Assembly..... 2.12
- Steering System..... 2.13
- Leveling Hydraulic Assembly..... 2.14
- Reservoir & Filter Assembly..... 2.15

Electrical Systems
- Electrical..... 3.1
  - Head Lights
  - Battery Cables
  - Battery
  - Battery Hold Down
  - Flasher
  - Flasher Lights
  - Relays
  - Relay & Fuse Block Mount
  - Mercury Switch Enclosure
- Mercury Switch Assembly..... 3.2
- Switches & Gauges..... 3.3
- Electrical Harness TNV..... 3.4
  - Front Harness..... 3.5
  - Rear Harness..... 3.6
  - Panel Harness..... 3.7
  - Relay Harness..... 3.8
- Turn Signal Option..... 3.9
  - Flasher Harness..... 3.10
  - Dash Harness..... 3.11
  - Power Harness..... 3.12
  - Turn Signal Rear Harness..... 3.13
- Electrical Schematic..... 3.14

Engine & Cooling
- Throttle..... 4.1
- Engine Assembly..... 4.2
- Engine Mounts & Exhaust..... 4.3
- Radiator Assembly..... 4.4

Frame & Assemblies

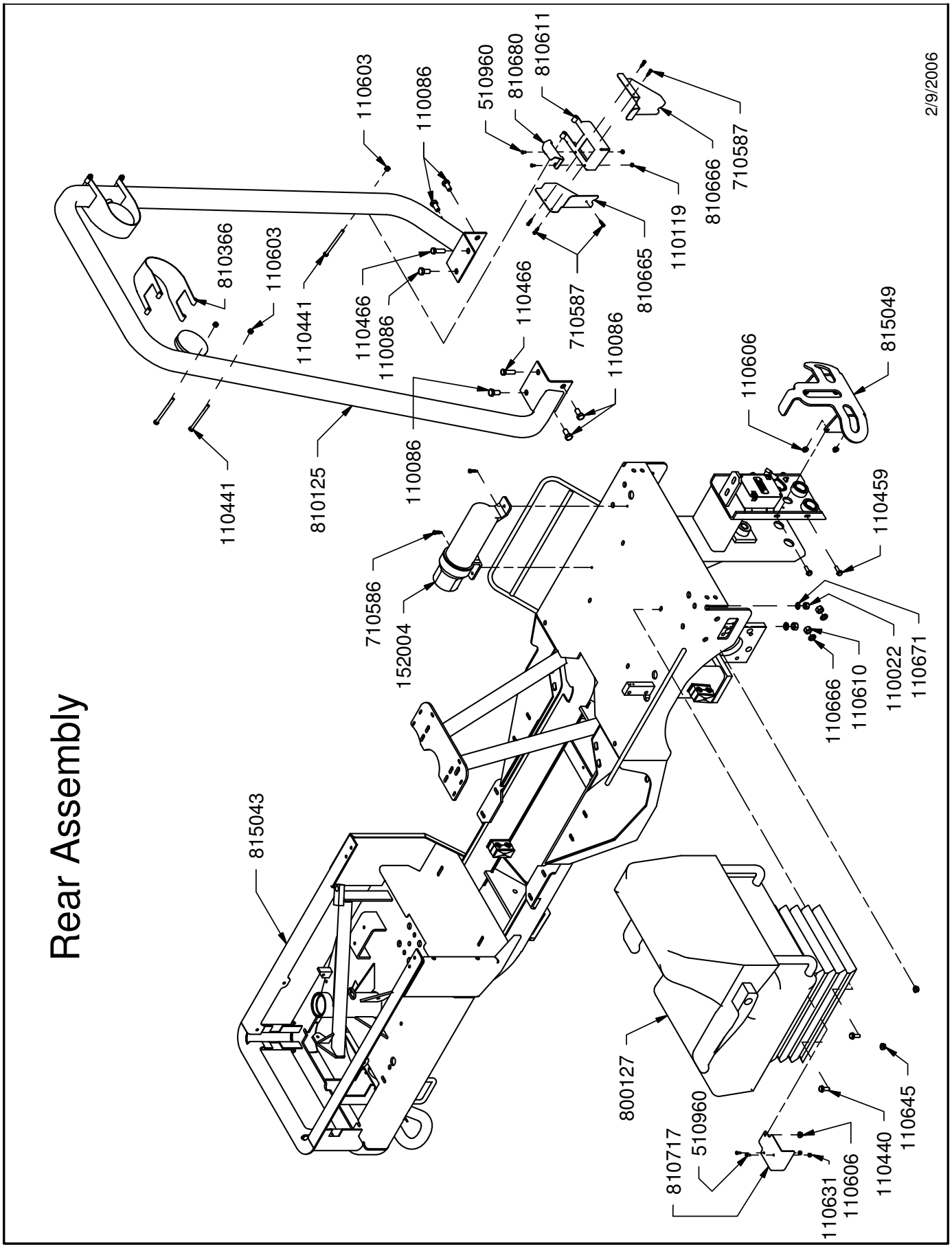
Rear Assembly
2/9/2006
815043
810366
110603
110441
810125
110603
110086
110466
110086
110441
110086
510960
810680
810611
710587
810666
110119
810665
710587
110466
110086
815049
110606
110459
710586
152004
110086
110666
110610
110022
110671
800127
510960
810717
110631
110606
110440
110645

Rear Assembly

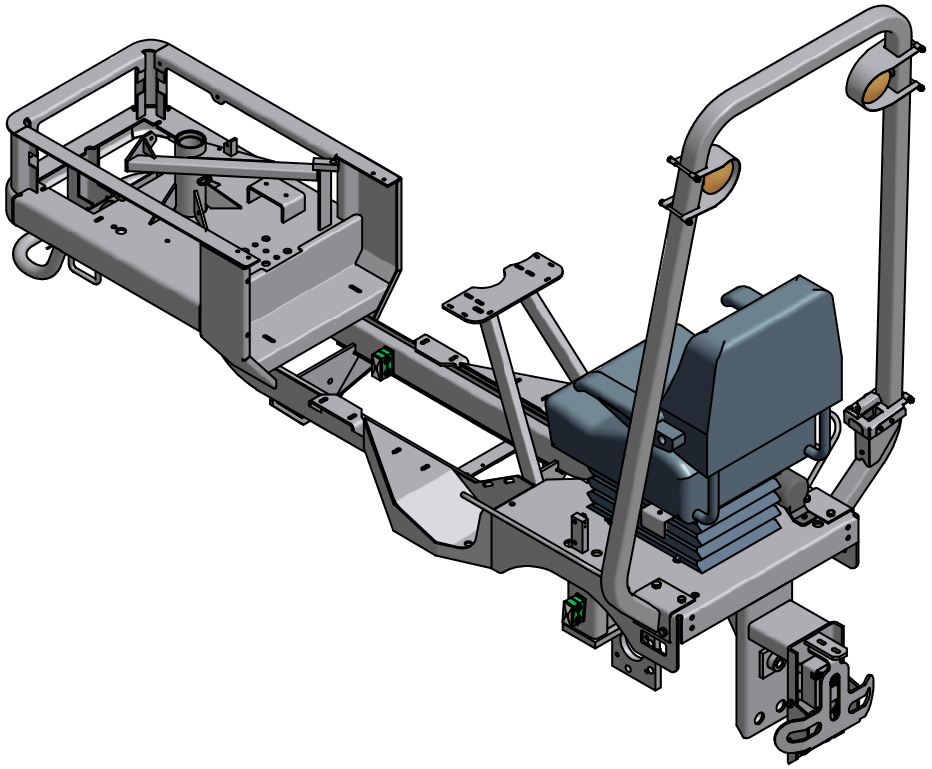

PART #	QUANTITY	DESCRIPTION
110022	2	NUT, 7/16-20
110086	6	BOLT, 1/2-13 X 1.0
110119	4	NUT, 10-24 LOCK
110440	4	BOLT, 3/8-16 X 1, WIZ FLANGE
110441	5	BOLT, 5/16-18 X 4.0
110459	4	BOLT, 5/16-18 X 1, WIZ FLANGE
110466	2	BOLT, 7/16-20 X 1.5
110603	5	NUT, 5/16-18 LOCK (NYLON)
110606	5	NUT, 5/16-18 WIZ FLANGE
110610	6	NUT, 1/2-13
110645	4	NUT, 3/8-16 WIZ FLANGE
110666	6	WASHER, 1/2" LOCK
110671	2	WASHER, 7/16" LOCK
152004	1	HOLDER, MANUAL
510960	4	SCREW, 10-24 X 0.5, RHMS
710586	2	SCREW, 1/4 X 1 TEK SELF-TAP
710587	5	SCREW, 3/16 X .75 TEK SELF-TAP
800127	1	SEAT, COMPLETE
	800156	1 SHOCK ABSORBER
	800157	1 SUSPENSION COVER
	800158	1 ICP BRACKET ASSY
	800159	1 TETHER KIT
	800160	1 4" TRACK SET
	800161	1 LPS HD MECH W/O BOOT
	800162	1 SET, FRONT ADJ ARMS
	800163	1 TRIMLINE BACK COVER
	800164	1 TRIMLINE CUSHION COVER
	800165	1 SEAT BELT
	800166	1 WEIGHT ADJ KNOB
	800188	1 SWITCH, EVC ULB TRIMLINE-FXD
	830055	1 SEAT SAFETY SWITCH
810125	1	ROPS, ATM 72
810366	2	LIGHT BRACKET
810611	1	LEVELING SWITCH BRACKET
810665	1	LEVELING SWITCH GUARD, FRONT
810666	1	LEVELING SWITCH GUARD, BACK
810680	1	SAFETY SWITCH BRACKET
810717	1	SEAT SWITCH TIME DELAY MOUNT
815043	1	FRAME WELDMENT, 72LC
815049	1	REAR BUMPER WELDMENT

2/9/2006

HARPER

PART #	QTY	DESCRIPTION
110162	4	BOLT, M12x1.75 x 30 SHCS
110166	4	BOLT, 1/2-13 X 2.0 SHCS
110258	1	NUT, 5/16-18, CAGE TINNERMAN
110431	5	BOLT, WHEEL, 7/16-20
110435	2	BOLT, 3/8-16 X 1.5
110444	1	BOLT, 5/16-18 X 0.75, WIZ FLANGE
110626	1	NUT, 1-20, SLOTTED
110645	2	NUT, 3/8-16 WIZ FLANGE
110665	2	WASHER, 5/16" FLAT STANDARD
510960	2	SCREW, 10-24 X 0.5, RHMS
510988	1	WIRE CLIP
520135	1	KEY, 5/16 X 1 WOODRUFF
550042	1	HAND BRAKE
550049	1	CLEVIS PIN, 5/16" DIA. x 1 3/8" LENGTH
550050	1	COTTER PIN, 3/32 X 1
800126	1	WHEEL ASSEMBLY
500181	1	WHEEL
800114	1	TIRE

PART #	QTY	DESCRIPTION
810607	1	SAFETY SWITCH STOP
832009	1	SWITCH, BRAKE NO-NC
832012	1	BOOT FOR 832009
850057	1	BRAKE DRUM
850058	1	CABLE, HAND BRAKE
850060	1	BRAKE ASSY, REAR
850075	1	BRAKE SHOE
850076	1	CYLINDER, WHEEL FOOT BRAKE 72
850078	1	BRAKE SHOE, W/HAND BRAKE ATTACH
850086	2	SPRING, BRAKE RETURN, KNOTT
850087	1	SPRING, HOLDING, KNOTT
850088	2	SPRING, HOLD DOWN, KNOTT
850062	1	CLEVIS, YOKE
850063	1	CLIP, E-Ring E-43

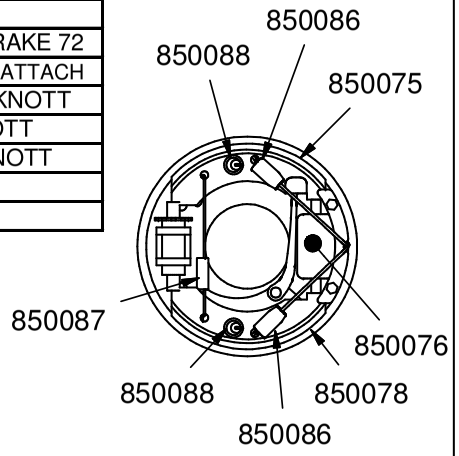

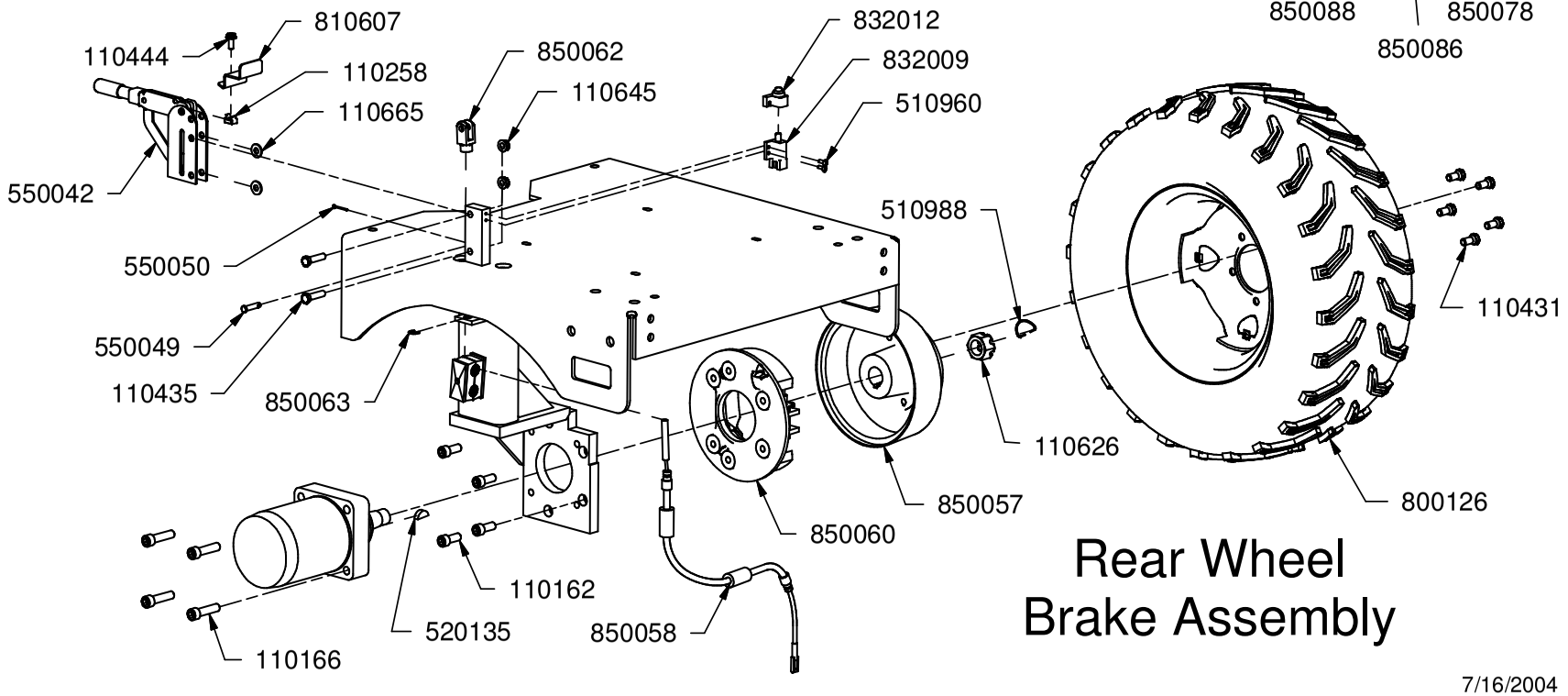

Rear Wheel Brake Assembly

7/16/2004

Foot Pedal

PART #	QUANTITY	DESCRIPTION
110226	1	ROLL PIN, 3/8 X 1.25
110620	2	NUT, 1/4-28
110632	2	NUT, 1/4-28, UNITORQUE LOCK
540075	2	BEARING, ROD END 1/4-28 W/STUD
810485	1	FOOT PEDAL ASSY.
815018	1	TRACTION LEVER WELDMENT
850102	1	TRACTION PAD
850104	1	FOOT PEDAL LINKAGE, ALLTHREAD

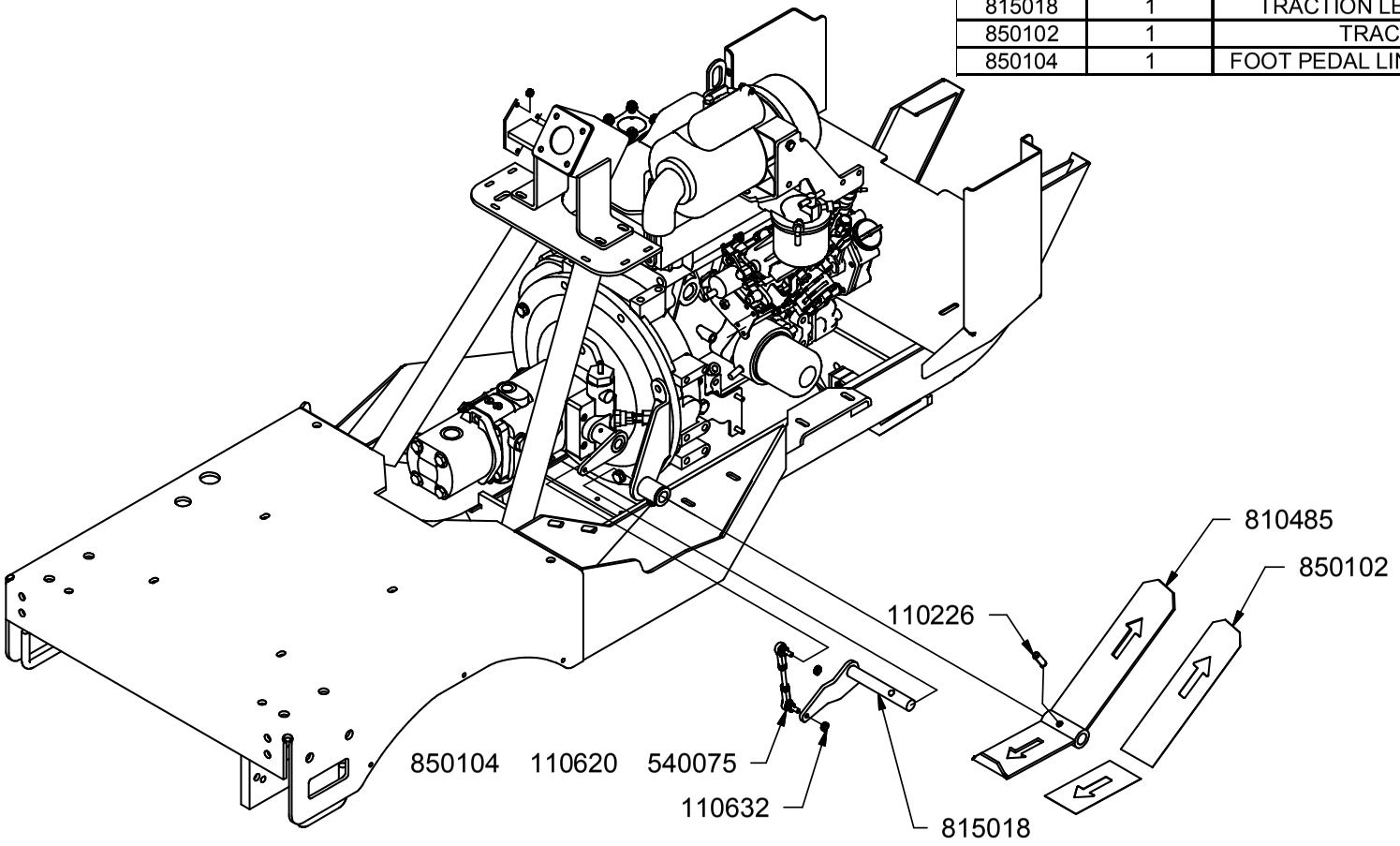

5/13/2004

Foot Pedal & Throttle

AFTER S/N 07A01

PART #	QUANTITY	DESCRIPTION
110226	1	ROLL PIN, 3/8 X 1.25
110273	1	CLIP, E-Ring E-25
110440	2	BOLT, 3/8-16 X 1, WIZ FLANGE
110484	2	BOLT, M6x1 x 16 Gr 10.9
110618	2	NUT, 3/8-16 LOCK NYLON INSERT
110620	2	NUT, 1/4-28
110631	3	NUT, 10-24 LOCK NYLON INSERT
110632	2	NUT, 1/4-28, UNITORQUE LOCK
110673	2	WASHER, 1/4" FLAT STANDARD
110676	2	WASHER, 3/8" FLAT STANDARD
110692	2	WASHER, 6 mm LOCK
500230	1	GREASE ZERK, 1/4-28 90deg
510094	3	SCREW, 10-24 X 1, RHMS
540075	2	BEARING, ROD END 1/4-28 W/STUD
800043	1	THROTTLE CABLE
800128	2	BUSHING, IGUS, FOOT PEDAL
802036	1	FOOT PEDAL PAD, RUBBER W/NUBBINS
810485	1	FOOT PEDAL ASSY.
810704	1	THROTTLE CABLE BRACKET
815018	1	TRACTION LEVER WELDMENT
815062	1	FOOT PEDAL BRACKET, WELDMENT
850104	1	FOOT PEDAL LINKAGE, ALLTHREAD

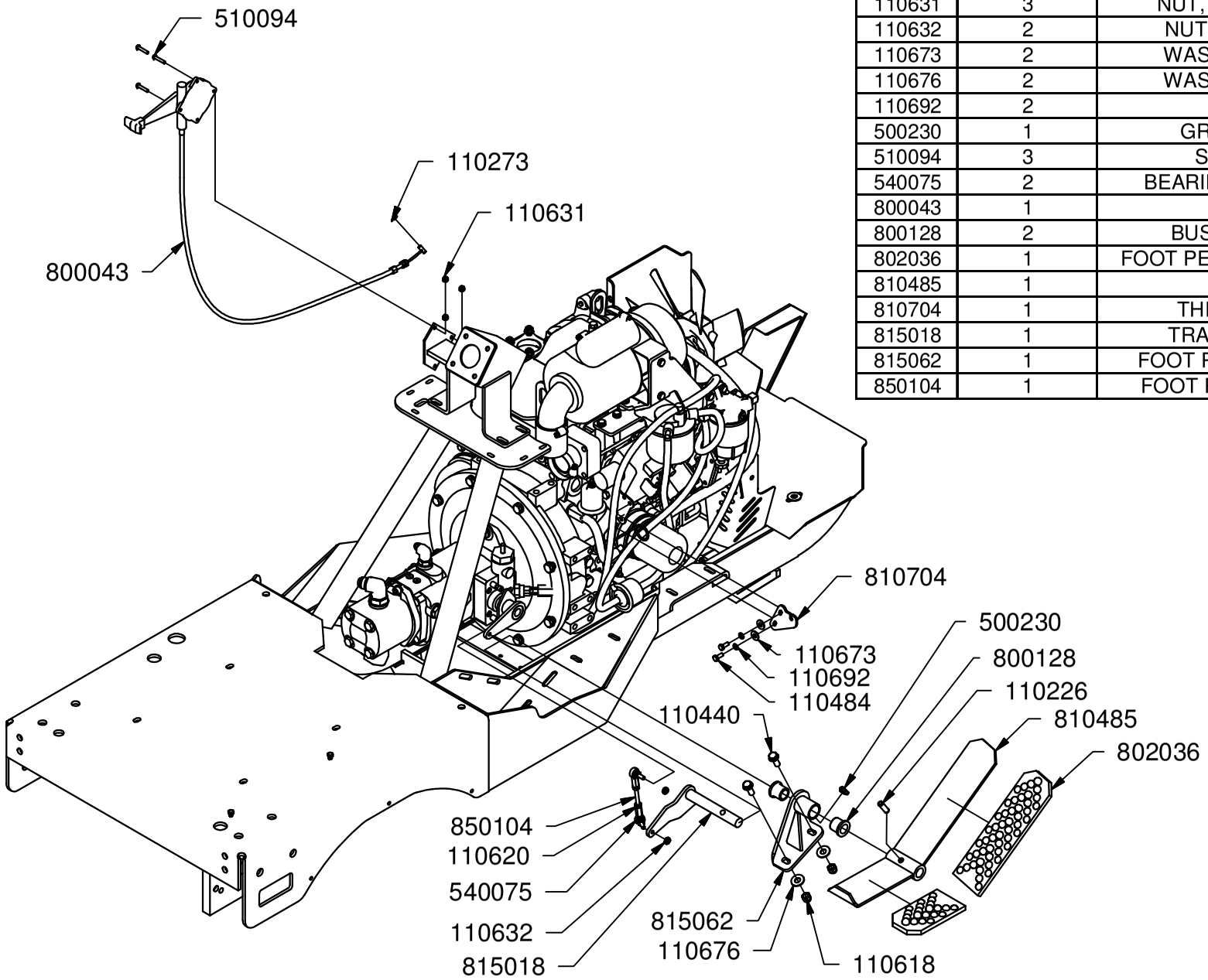

12/13/2006

Front Steering Assembly

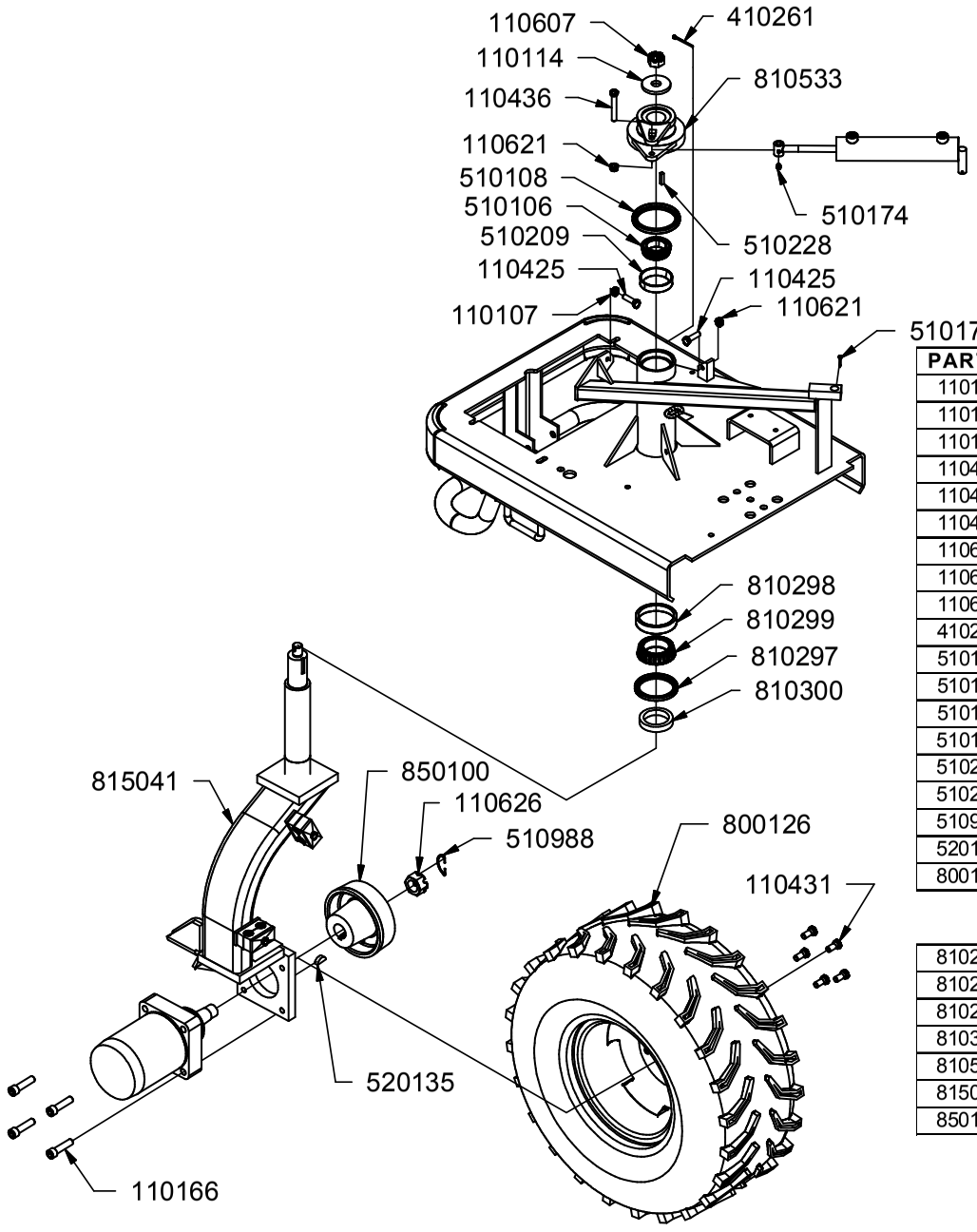

PART #	QUANTITY	DESCRIPTION
110107	1	NUT, 3/8-16 HEX JAM GR 2
110114	1	WASHER, 2.25 x .75 x .25T
110166	4	BOLT, 1/2-13 X 2.0 SHCS
110425	2	BOLT, 3/8-16 X 1.25
110431	5	BOLT, WHEEL, 7/16-20
110436	1	BOLT, 3/8-16 X 2.5
110607	1	NUT, 3/4-10, SLOTTED
110621	2	NUT, 3/8-16, UNITORQUE LOCK
110626	1	NUT, 1-20, SLOTTED
410261	1	COTTER PIN, 1/8 X 1.75
510106	1	BEARING
510108	1	SEAL
510174	1	GREASE ZERK, 1/4-28 ST
510176	1	COTTER PIN, 1/8 X 1
510209	1	RACE
510228	1	KEY, 1/4 X 1/4 X 1.0 in
510988	1	WIRE CLIP
520135	1	KEY, 5/16 X 1 WOODRUFF
800126	1	WHEEL ASSEMBLY
	500181 (1)	WHEEL
	800114 (1)	TIRE
810297	1	BOTTOM SEAL
810298	1	BEARING CUP
810299	1	BEARING LOWER
810300	1	SPACER, STEERING TOWER
810533	1	STEERING ARM ASSY
815041	1	SPINDLE / WHEEL MOUNT ASSY W/JACK BLOCK
850100	1	FRONT WHEEL HUB

4/26/2004

Fuel Tank Assembly

PART #	QUANTITY	DESCRIPTION
110437	3	BOLT, 3/8-16 X 0.75, WIZ FLANGE
120378	2	ADAPTER, 5HB-6FBX
720124	2	CLAMP, HOSE #6 .375 MINI
800001	1	FUEL TANK
802019	1	FUEL CAP
802023	2	VALVE, FUEL SHUT OFF 6MB-4MP
820201	2	FUEL HOSE
830004	1	GAUGE, FUEL
830060	1	NUT
830061	1	GASKET

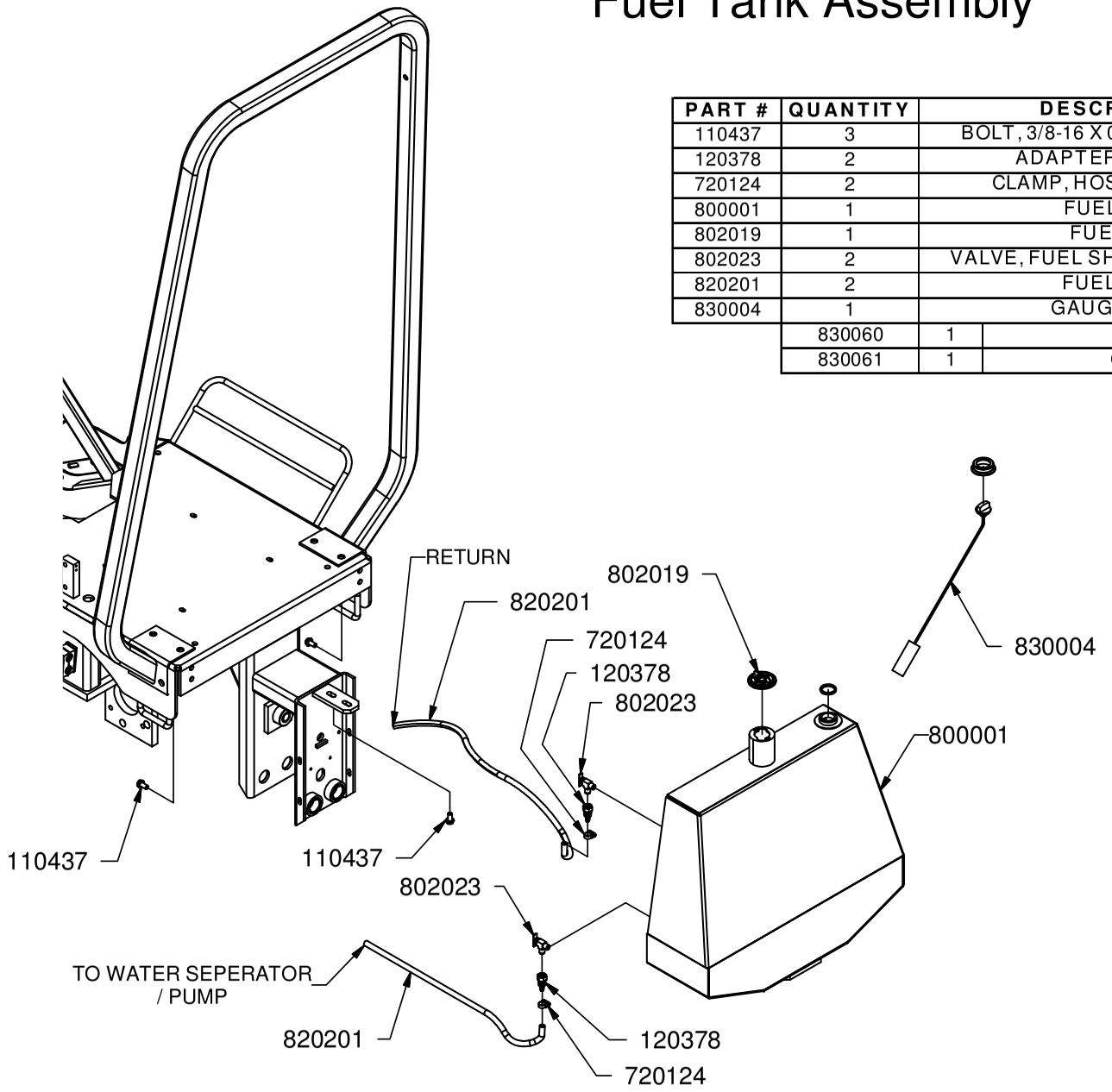

12/15/2006

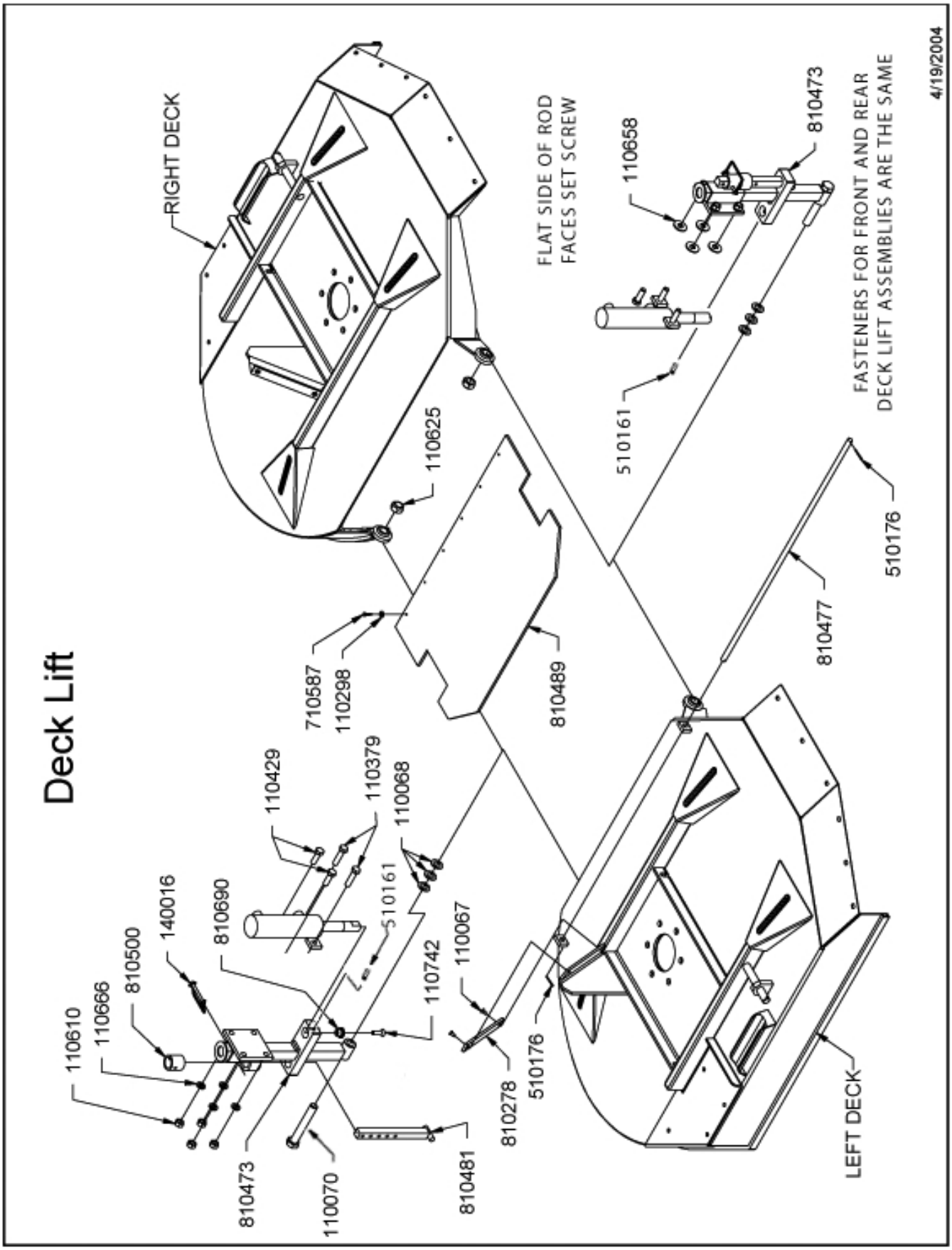
Deck Lift
RIGHT DECK
LEFT DECK
FLAT SIDE OF ROD FACES SET SCREW
FASTENERS FOR FRONT AND REAR DECK LIFT ASSEMBLIES ARE THE SAME
4/19/2004
110610
110666
810500
140016
810690
110429
110379
110068
510161
110742
110067
710587
110298
110625
810489
510161
110658
810473
510176
810477
510176
810278
810481
110070
810473

Deck Lift

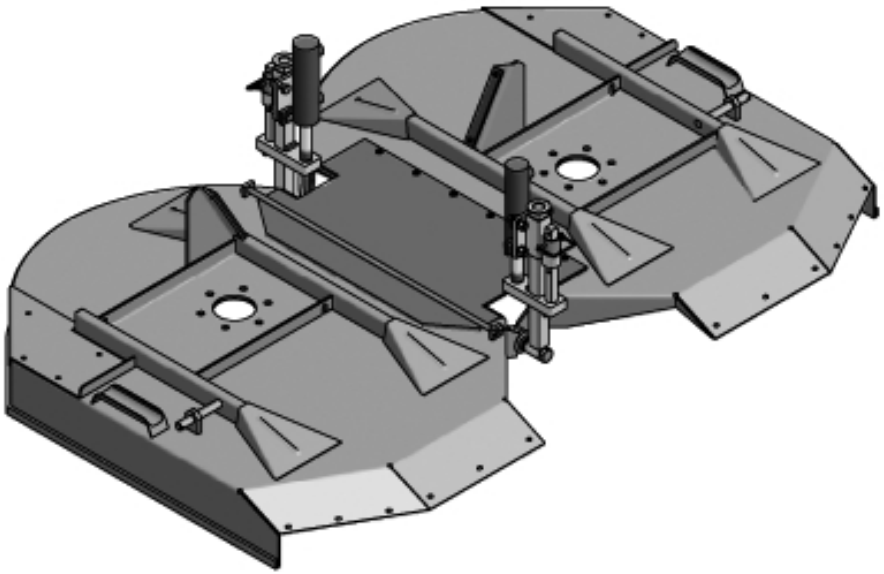

PART #	QUANTITY	DESCRIPTION
110067	4	SCREW, 1/4-20 X .50 SLOT FLAT-HD
110068	6	WASHER, 1.25 OD X .75 ID X .075
110070	2	BOLT, 3/4-10 X 5.0
110298	6	WASHER, 1/4" FLAT SAE
110379	4	BOLT, 1/2-13 X 2.0
110742	2	BOLT, 3/8-16 X 1.25 FHCS
110429	4	BOLT, 1/2-13 X 1.5
110610	8	NUT, 1/2-13
110625	2	NUT, 3/4-10, UNITORQUE LOCK
110658	4	WASHER, 1/2" FLAT STANDARD
110666	8	WASHER, 1/2" LOCK
140016	2	PIN, LOCK, 1/4 X 2-1/4, SQ WIRE
510176	2	COTTER PIN, 1/8 X 1
710587	6	SCREW, 3/16 X .75 TEK SELF-TAP
810278	2	PLASTIC BUMPER, MOTOR GUARD
810473	2	DECK LIFT WELDMENT
810477	1	HOLD DOWN ROD, CENTER DECK COVER
810481	2	DECK ADJUSTER WELDMENT
810489	1	PLASTIC DECK COVER
810500	2	GUIDE BUSHING, DECK LIFT
810690	2	DECK LIFT BUSHING
510161	2	SET SCREW, 3/8-16 X 1/2

4/19/2004

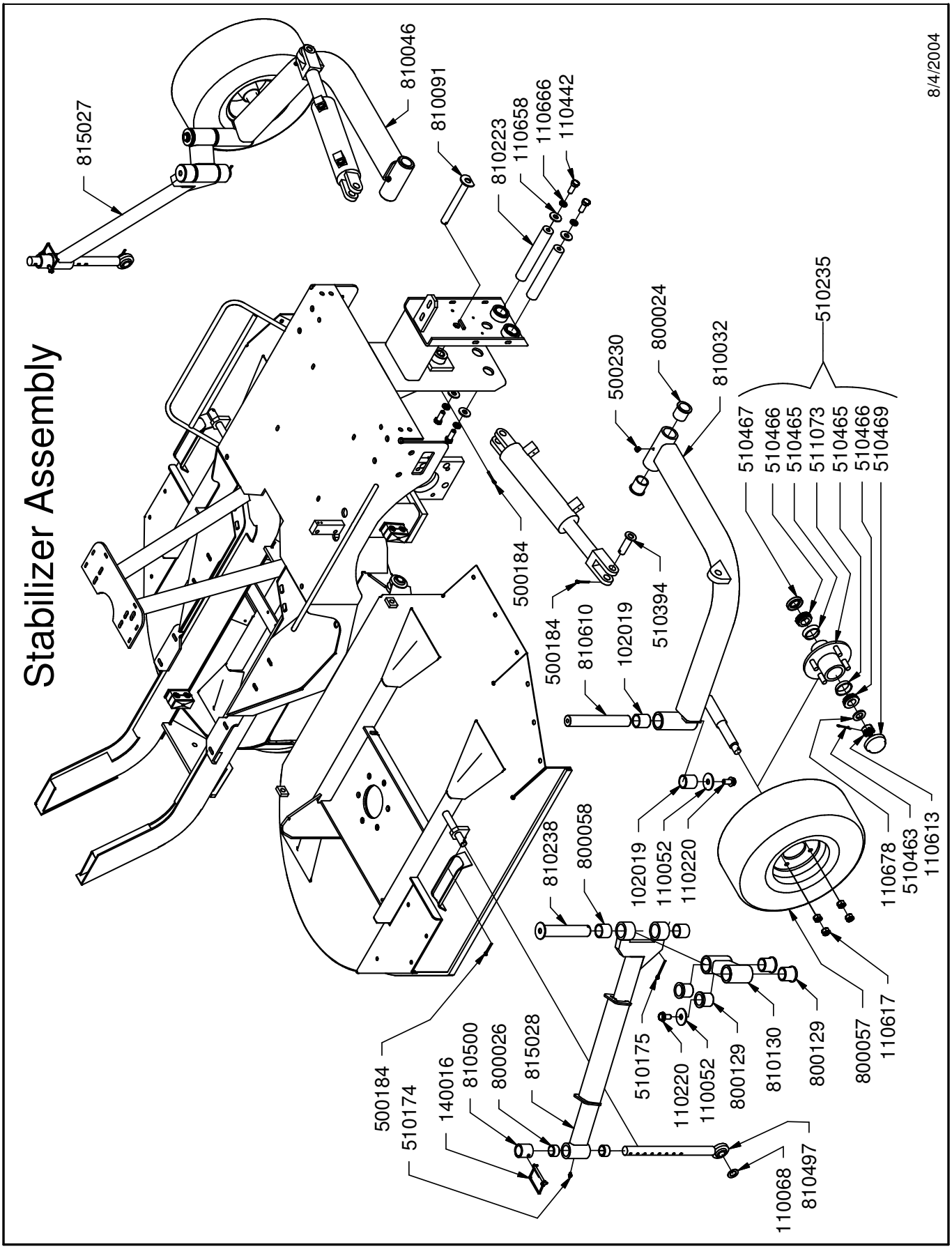
Stabilizer Assembly
8/4/2004
815027
810046
810091
810223
110658
110666
110442
500230
800024
810032
510235
510467
510466
510465
511073
510465
510466
510469
500184
810610
102019
510394
500184
810238
800058
102019
110052
110220
500184
510174
140016
810500
800026
815028
510175
110220
110052
800129
810130
800129
800057
110617
110678
510463
110613
110068
810497

Stabilizer Assembly

PART #	QUANTITY	DESCRIPTION
102019	4	BUSHING, 1-1/2 X 1-1/4 X 1-1/2 MSI-2024-24
110052	4	WASHER, 1.875 X .563 X .125, FLAT SPECIAL
110068	2	WASHER, 1.25 OD X .75 ID X .075
110220	4	BOLT, 1/2-13 X 1, WIZ FLANGE
110442	4	BOLT, 1/2-13 X 1.25
110613	2	NUT, CASTLE 3/4-16
110658	4	WASHER, 1/2" FLAT STANDARD
110666	4	WASHER, 1/2" LOCK
110678	2	WASHER, 3/4 FLAT SAE
140016	2	PIN, LOCK, 1/4 X 2-1/4, SQ WIRE
500184	5	COTTER PIN, 3/16 X 1.25
500230	2	GREASE ZERK, 1/4-28 90deg
510174	2	GREASE ZERK, 1/4-28 ST
510175	2	COTTER PIN, 3/16 X 2
510235	2	HUB ASSEMBLY
	110617	4 NUT, 1/2-20 LUG
	510465	2 BEARING CUP, 1.98 X .42
	510466	2 BEARING CONE, TAPER 1.0 X .58
	510467	1 SEAL, CR 12407
	510469	1 DUST CAP
	511073	1 HUB

PART #	QUANTITY	DESCRIPTION
510394	2	LEVELING CYLINDER PIN
510463	2	COTTER PIN, 1/8 X 1.25
800024	4	BRASS BUSHING, EQUALIZER ARM
800026	4	BUSHING, 1.25 X 1.0 X .75 SPLIT STEEL
800057	2	FILLED STABILIZER TIRE ASSEMBLY
800058	4	BRASS BUSHING, OUTER DECK ARM
800075	1	BUSHING, 1.0 X .75 X 1.25 SPLIT STEEL
800076	1	BUSHING, 1.0 X .75 X 1.00 SPLIT STEEL
800077	1	BUSHING, 1.0 X .75 X .75 SPLIT STEEL
800129	8	BUSHING, IGUS MFI-2024-24
810091	1	PIN, LEVELING CYLINDER BASE
810130	2	EQUALIZER ARM ASSY
810223	2	PIN, STABILIZER PIVOT
810238	2	PIN ASSY, EQUILIZER ARM MOUNT
810317	4	BUSHING, SPLIT RING TENSION
810497	2	SLIDE ASSY, OUTER DECK ADJ
810500	2	GUIDE BUSHING, DECK LIFT
810610	2	VERTICAL SHAFT
810046	1	STABILIZER ARM WELDMENT, RIGHT
810032	1	STABILIZER ARM WELDMENT, LEFT
815027	1	OUTER DECK ARM WELDMENT, W/O STEP
815031		INCLUDES PART# 815027, 800026, 800056
815028	1	OUTER DECK ARM WELDMENT, W/ TREAD GRIP STEP
815032		INCLUDES PART# 815028, 800026, 800056

8/4/2004

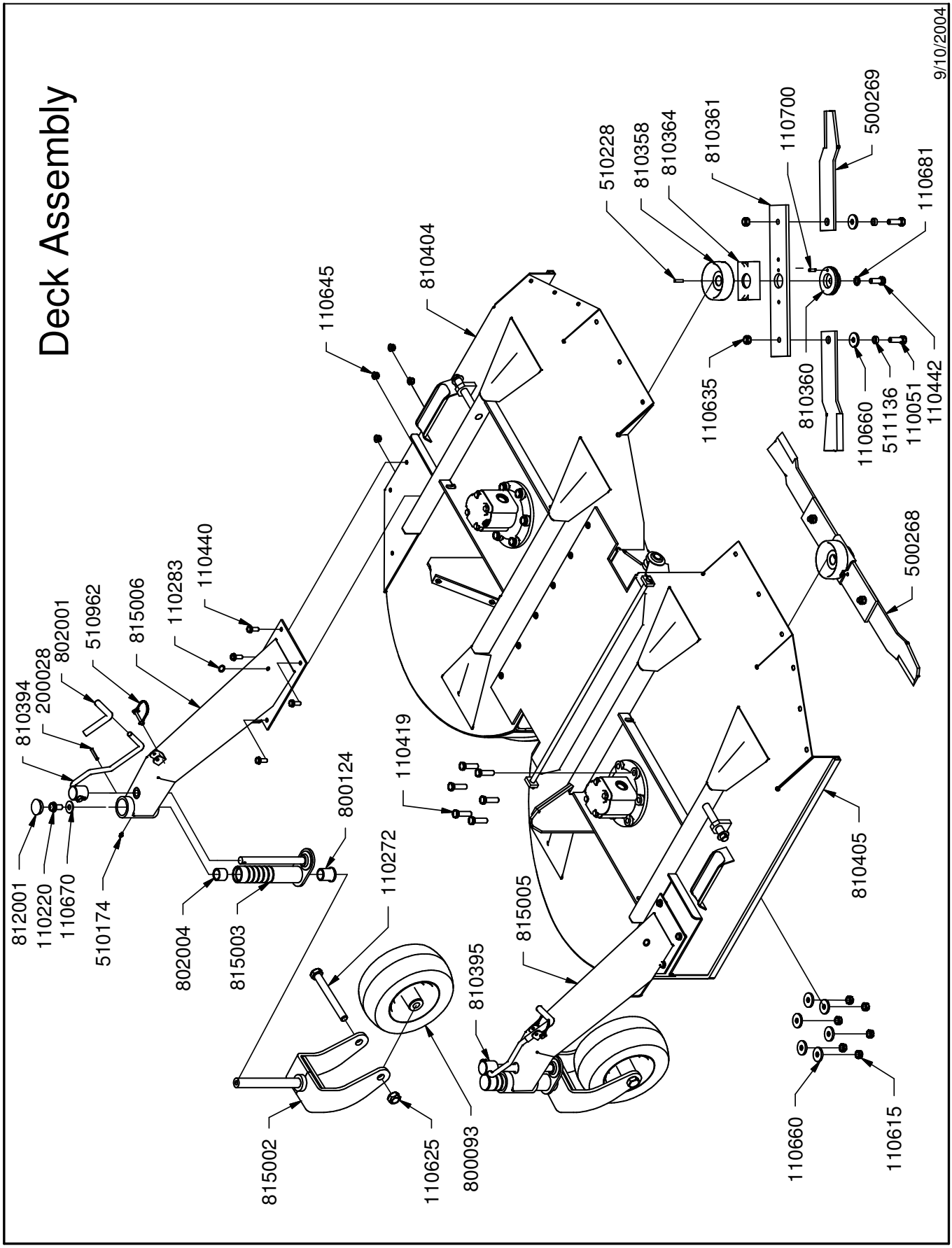
Deck Assembly
9/10/2004
812001
110220
110670
510174
810394
200028
802001
510962
815006
110283
110440
802004
815003
800124
110272
815002
110625
110419
810404
110645
815005
810395
800093
510228
810358
810364
810361
110700
500269
110681
110635
810360
110660
511136
110051
110442
500268
810405
110660
110615

Deck Assembly

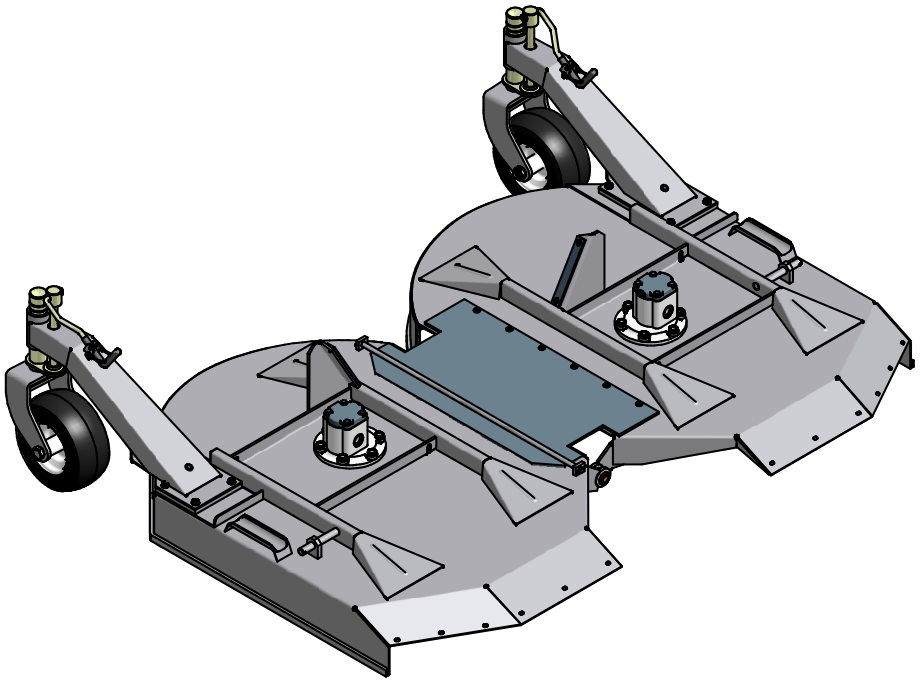

PART #	QUANTITY	DESCRIPTION
110220	2	BOLT, 1/2-13 X 1, WIZ FLANGE
110272	2	BOLT, 3/4-10 X 6.75
110283	2	PLUG, 7/16", NYLON, SNAP LOCK
110419	12	BOLT, 1/2-13 X 1.75
110440	8	BOLT, 3/8-16 X 1, WIZ FLANGE
110442	2	BOLT, 1/2-13 X 1.25
110615	12	NUT, 1/2-13, UNITORQUE LOCK
110625	2	NUT, 3/4-10, UNITORQUE LOCK
110645	8	NUT, 3/8-16 WIZ FLANGE
110660	12	WASHER, 1/2 FLAT SPECIAL 1.5 OD
110670	2	WASHER, 7/16" FLAT STANDARD
110681	2	WASHER, 1/2 EXT. TOOTH LOCK
110700	2	ROLL PIN, 1/4 X 0.75
200028	2	ROLL PIN, 1/4 X 1.5
500268	1	BLADE KIT, LEFT
500269	1	BLADE KIT, RIGHT
500319	2	BOLT KIT
	110051	2 BOLT, 1/2-20 X 1.5, GR8
	110635	2 NUT, 1/2-20, UNITORQUE LOCK
	110660	2 WASHER, 1/2 FLAT SPECIAL 1.5 OD
	511136	2 BUSHING, BLADE MOUNT
510174	2	GREASE ZERK, 1/4-28 ST
510228	2	KEY, 1/4 X 1/4 X 1.0 in
510962	2	PIN, WIRE LOCK
800093	2	CASTER WHEEL ASSY
800124	2	BUSHING, MFI-1620-24
802001	2	COVER, VINYL, 1/2 RND X 6.0
802004	2	BUSHING, MSI-1620-16
810358	2	HUB, BLADE MOUNT
810360	2	WASHER, BLADE MOUNT
810361	2	BLADE MOUNT
810364	2	BLADE SADDLE
810394	1	CRANK ASSY, RIGHT
810395	1	CRANK ASSY, LEFT
810404	1	DECK WELDMENT, RIGHT
810405	1	DECK WELDMENT, LEFT
812001	2	DUST CAP
815002	2	CASTER YOKE WELD ASSY, W/SHORT SHAFT
815003	2	ADJUSTMENT SCREW WELD ASSY, W/C'BORE
815005	1	CASTER ARM WELD ASSY, RIGHT
815006	1	CASTER ARM WELD ASSY, LEFT

9/10/2004

HOOD & SCREENS

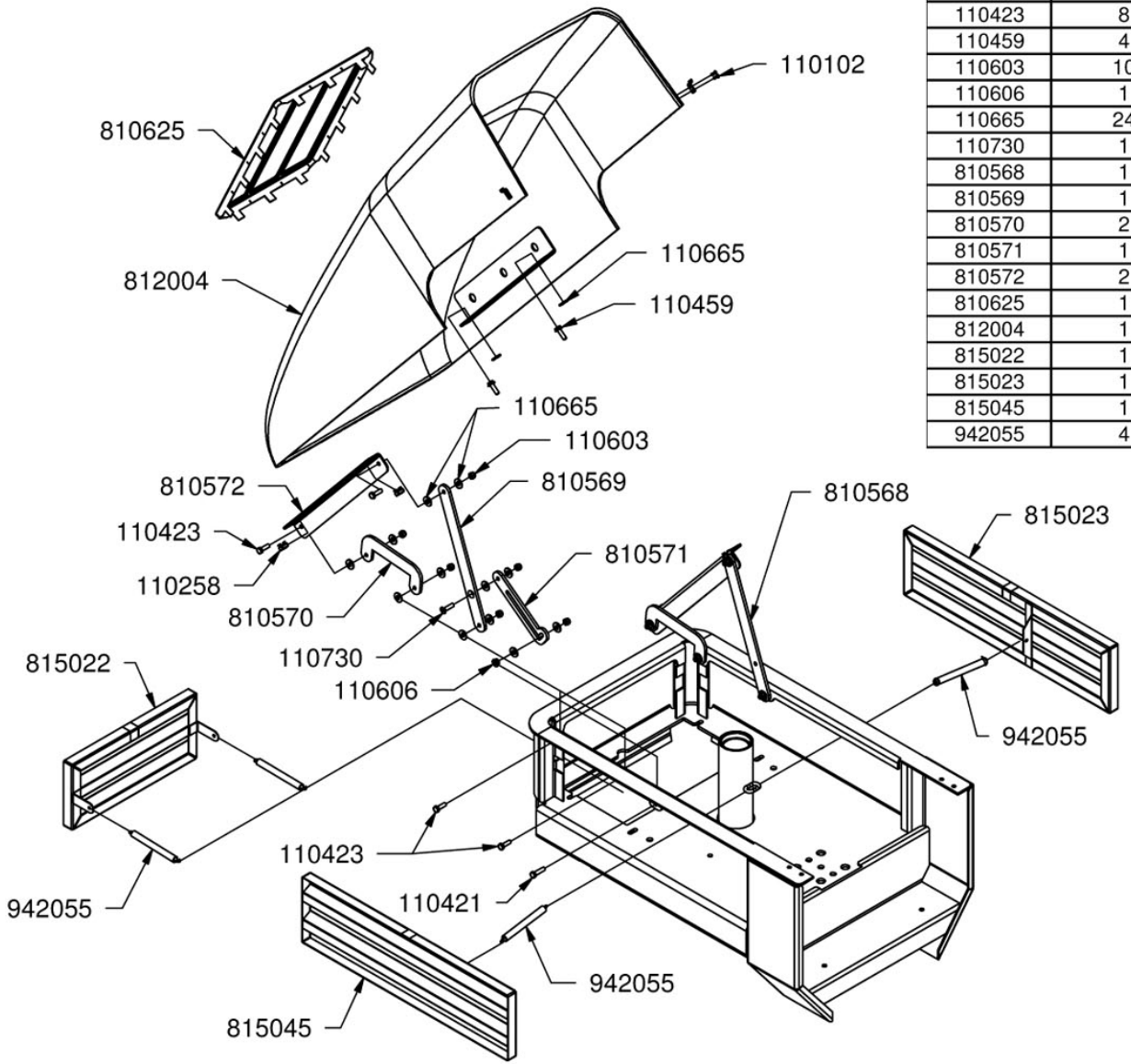

PART #	QUANTITY	DESCRIPTION
110102	4	RIVET, POP, 5/32 X .378
110258	4	NUT, 5/16-18, CAGE TINNERMAN
110421	1	BOLT, 5/16-18 X 1-1/4
110423	8	BOLT, 5/16-18 X 1.0
110459	4	BOLT, 5/16-18 X 1, WIZ FLANGE
110603	10	NUT, 5/16-18 LOCK (NYLON)
110606	1	NUT, 5/16-18 WIZ FLANGE
110665	24	WASHER, 5/16" FLAT STANDARD
110730	1	BOLT, 5/16-18 X 1.25 82° FLATHEAD
810568	1	HOOD LIFT ARM, REAR
810569	1	HOOD LIFT ARM, REAR LEFT
810570	2	HOOD LIFT ARM, FRONT
810571	1	SAFETY CATCH
810572	2	HOOD LIFT BRACKET
810625	1	TOP SCREEN
812004	1	HOOD, DEWEZE RED
815022	1	GRILL, FRONT
815023	1	GRILL, SIDE RIGHT
815045	1	GRILL, SIDE LEFT
942055	4	SPRING

1/29/2004

Cowling & Dash

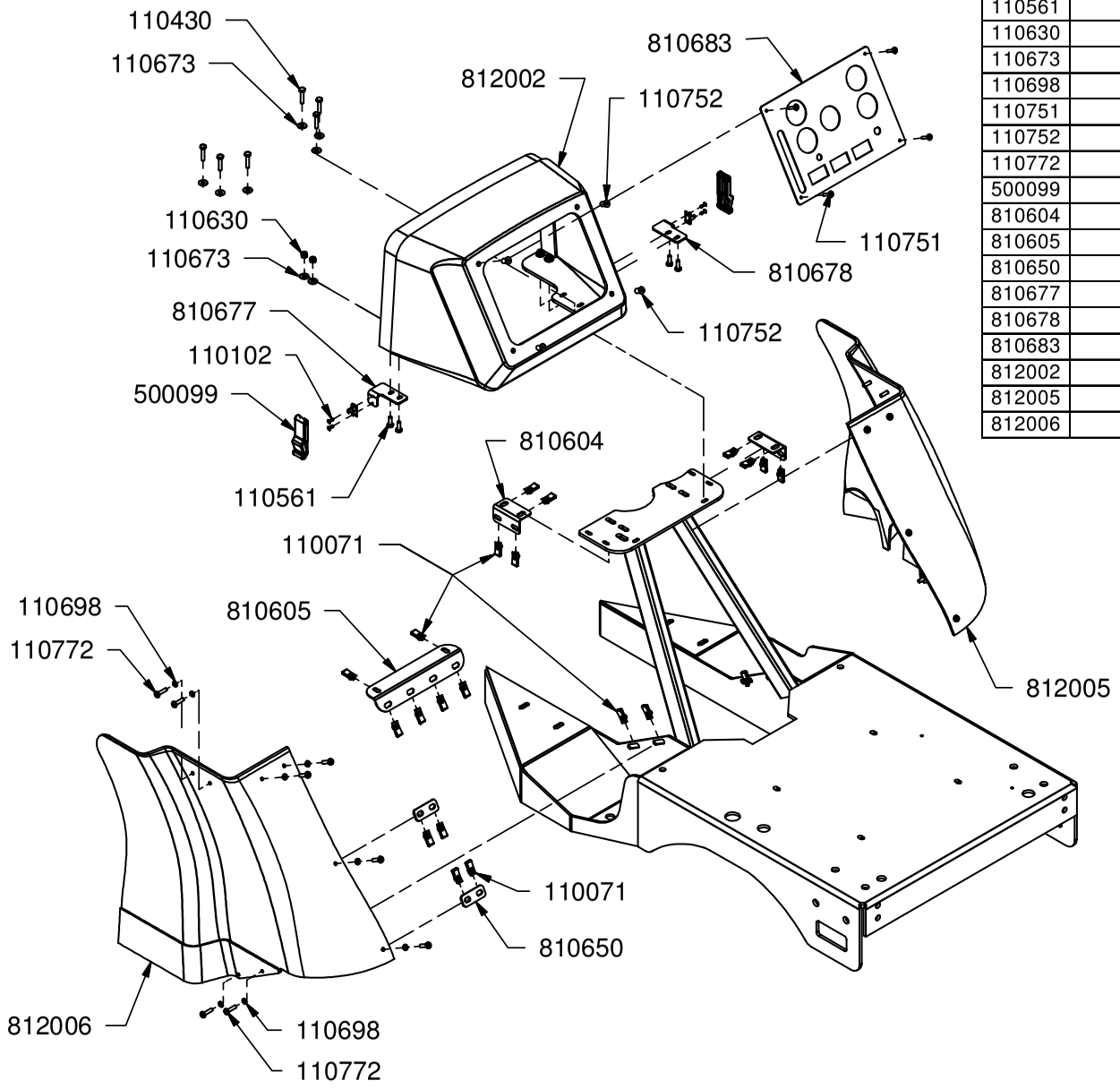

PART #	QUANTITY	DESCRIPTION
110071	22	1/4-20 U-TYPE TAPPED HOLE
110102	4	RIVET, POP, 5/32 X .378
110430	6	BOLT, 1/4-20 X 1-1/4
110561	4	BOLT, 1/4-20 X .75
110630	4	NUT, 1/4-20 LOCK (NYLON INSERT)
110673	10	WASHER, 1/4" FLAT STANDARD
110698	16	WASHER, 1/4 NYLON
110751	4	SCREW, 10-32 X 1 TRUSS HEAD
110752	4	NUT, 10-32 THREADED INSERT
110772	16	SCREW, 1/4-20 X 1.0, PAN PHILIP
500099	2	LATCH
810604	2	COWLING BRACKET, SIDE
810605	1	COWLING BRACKET, TOP
810650	2	COWLING BRACKET
810677	1	HOOD LATCH MOUNT, LEFT
810678	1	HOOD LATCH MOUNT, RIGHT
810683	1	INSTRUMENT PANEL
812002	1	COWLING DASH
812005	1	COWLING, RIGHT
812006	1	COWLING, LEFT

2/9/2006

Hydraulic Systems

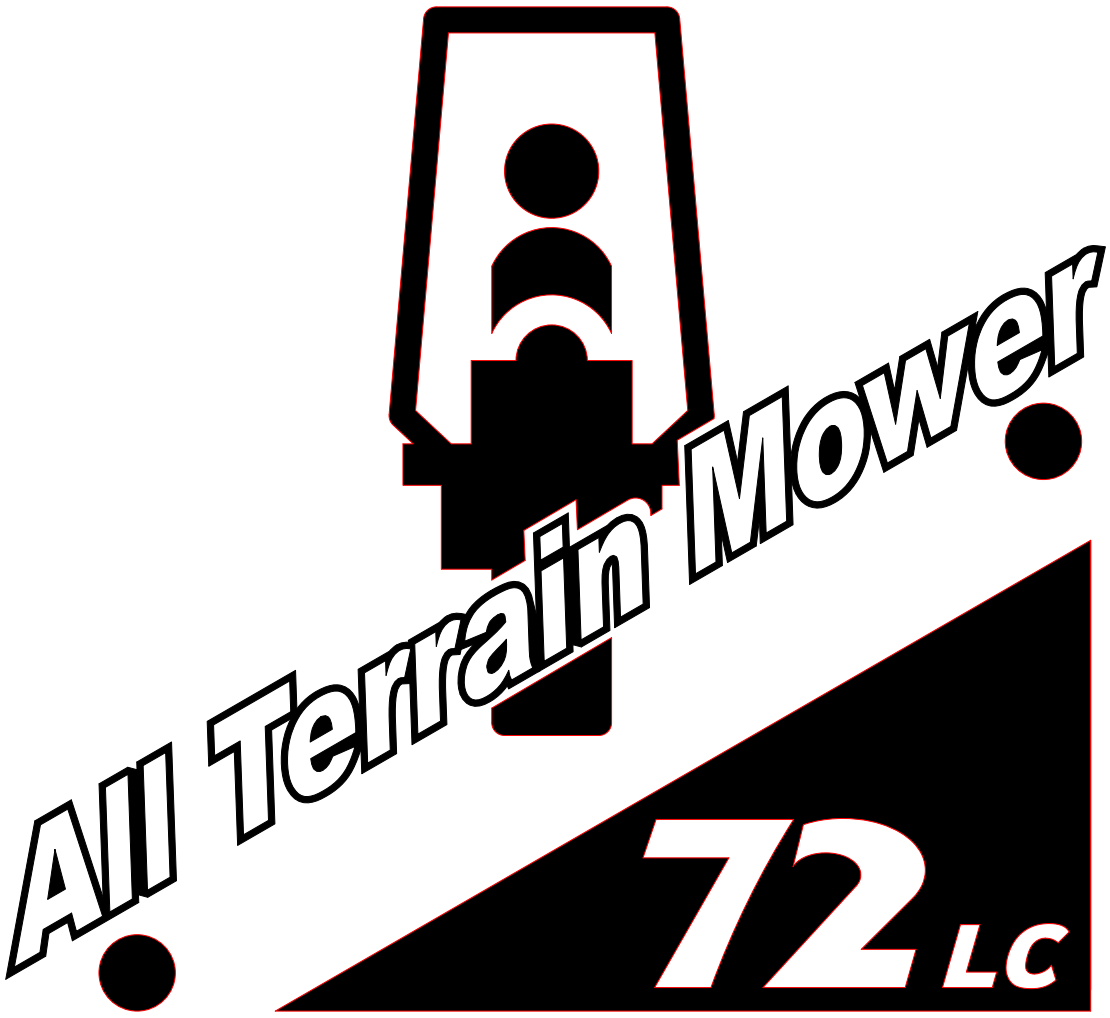

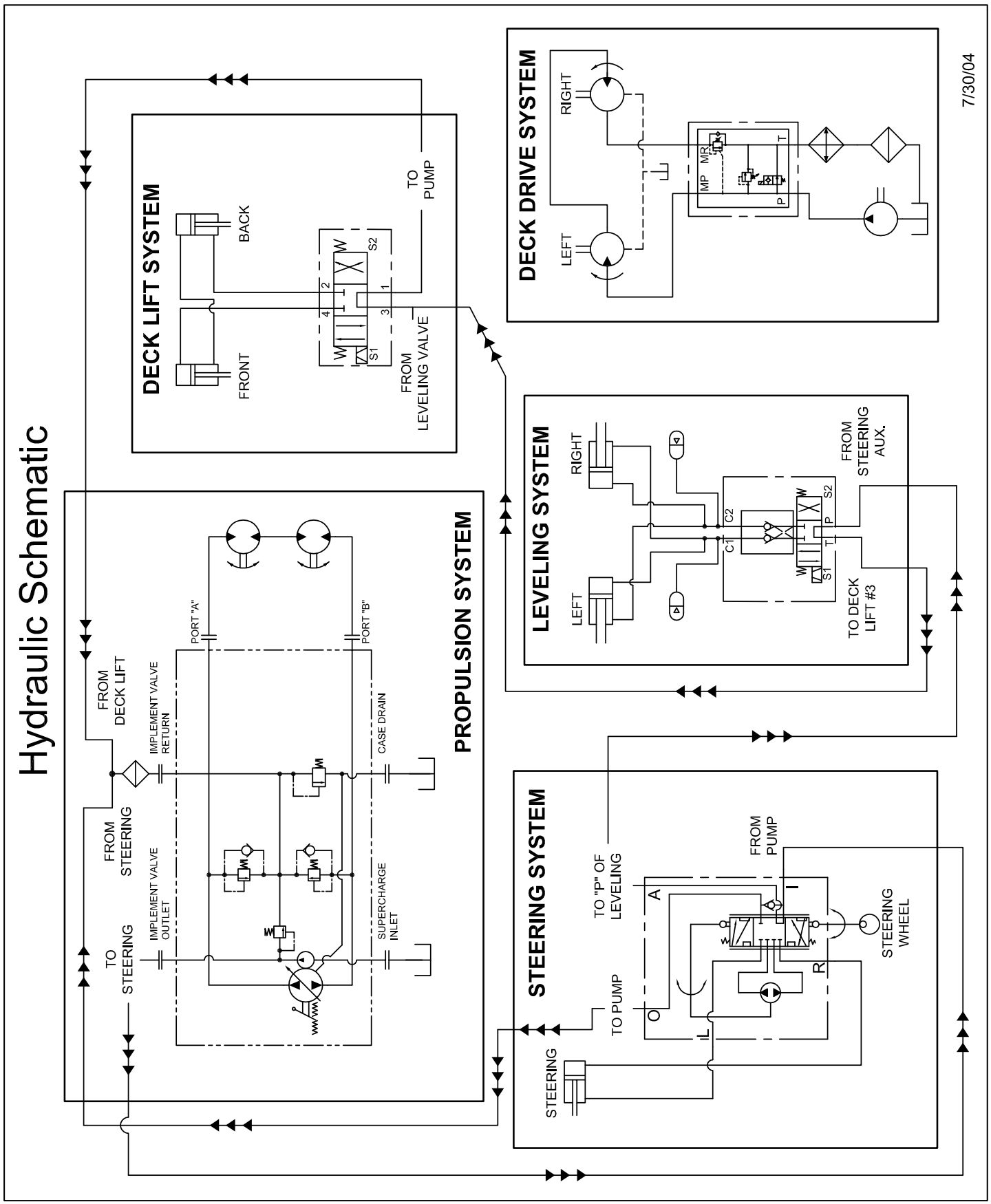
Hydraulic Schematic
7/30/04
DECK LIFT SYSTEM
BACK
FRONT
TO PUMP
FROM LEVELING VALVE
DECK DRIVE SYSTEM
RIGHT
LEFT
MP
MR
P
T
LEVELING SYSTEM
RIGHT
LEFT
FROM STEERING AUX.
TO DECK LIFT #3
C1
C2
P
T
S1
S2
PROPULSION SYSTEM
FROM DECK LIFT
IMPLEMENT VALVE RETURN
FROM STEERING
IMPLEMENT VALVE OUTLET
TO STEERING
PORT "A"
PORT "B"
CASE DRAIN
SUPERCHARGE INLET
STEERING SYSTEM
TO "P" OF LEVELING
FROM PUMP
TO PUMP
STEERING
STEERING WHEEL
A
I
O
L
R

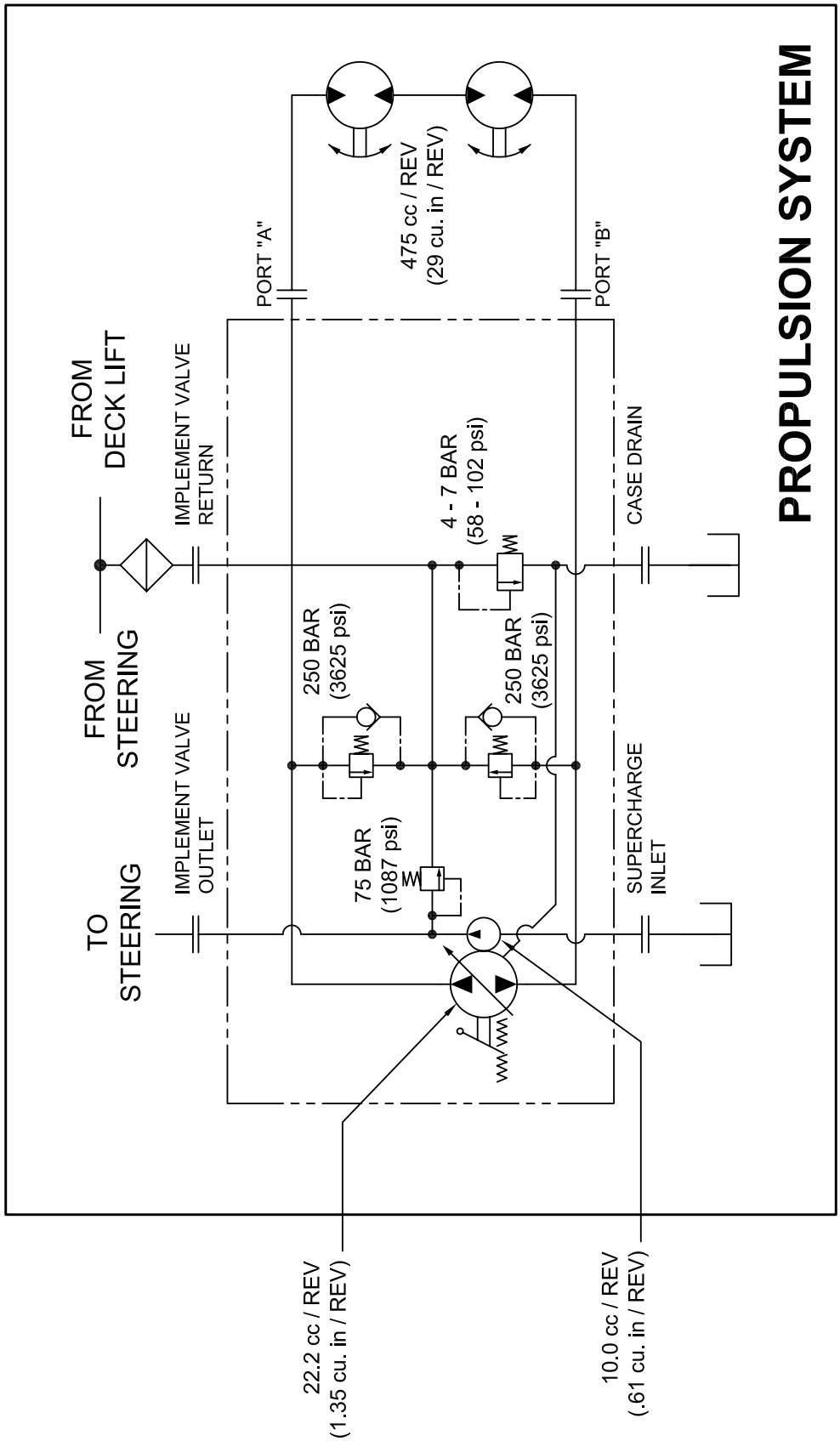
PROPULSION SYSTEM
475 cc / REV
(29 cu. in / REV)
PORT "A"
PORT "B"
FROM
DECK LIFT
IMPLEMENT VALVE
RETURN
4 - 7 BAR
(58 - 102 psi)
CASE DRAIN
FROM
STEERING
250 BAR
(3625 psi)
250 BAR
(3625 psi)
TO
STEERING
IMPLEMENT VALVE
OUTLET
75 BAR
(1087 psi)
SUPERCHARGE
INLET
22.2 cc / REV
(1.35 cu. in / REV)
10.0 cc / REV
(.61 cu. in / REV)

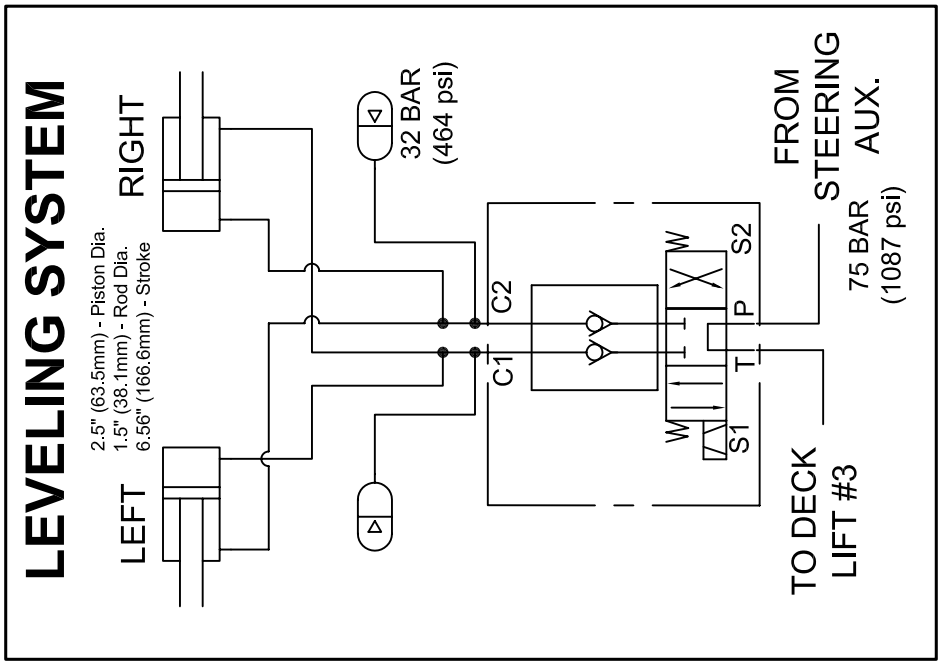
LEVELING SYSTEM
2.5" (63.5mm) - Piston Dia.
1.5" (38.1mm) - Rod Dia.
6.56" (166.6mm) - Stroke
LEFT
RIGHT
32 BAR
(464 psi)
C2
C1
W
S1
T
P
S2
W
FROM
STEERING
AUX.
75 BAR
(1087 psi)
TO DECK
LIFT #3

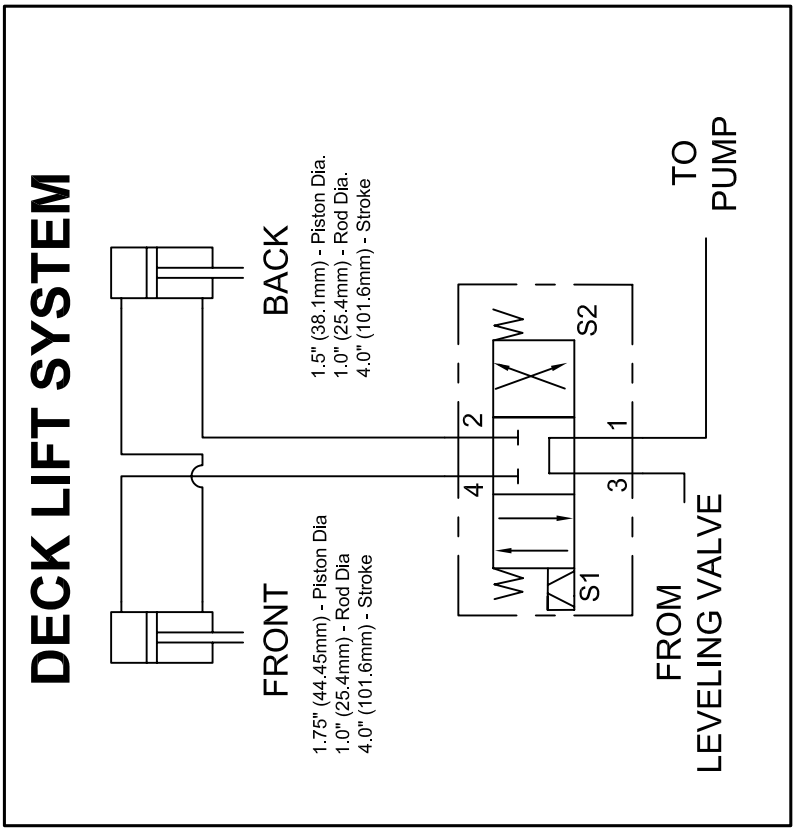
DECK LIFT SYSTEM
BACK
1.5" (38.1mm) - Piston Dia.
1.0" (25.4mm) - Rod Dia.
4.0" (101.6mm) - Stroke
FRONT
1.75" (44.45mm) - Piston Dia
1.0" (25.4mm) - Rod Dia
4.0" (101.6mm) - Stroke
TO
PUMP
FROM
LEVELING VALVE
S1
S2
1
2
3
4

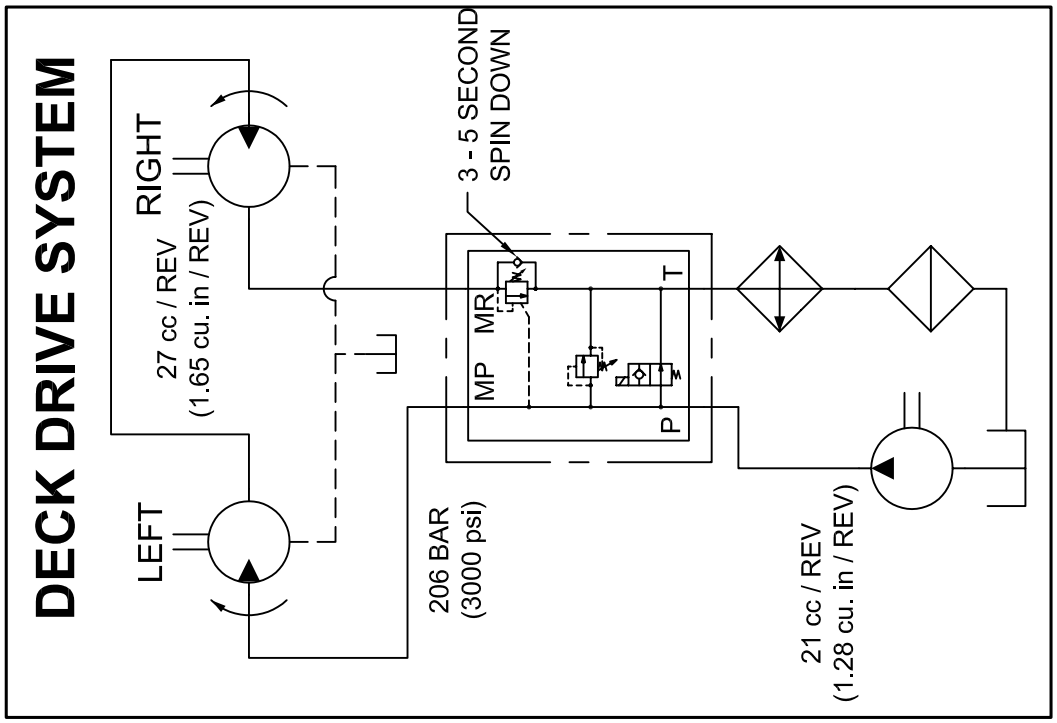
DECK DRIVE SYSTEM
RIGHT
27 cc / REV
(1.65 cu. in / REV)
LEFT
3 - 5 SECOND
SPIN DOWN
MP
MR
T
P
206 BAR
(3000 psi)
21 cc / REV
(1.28 cu. in / REV)

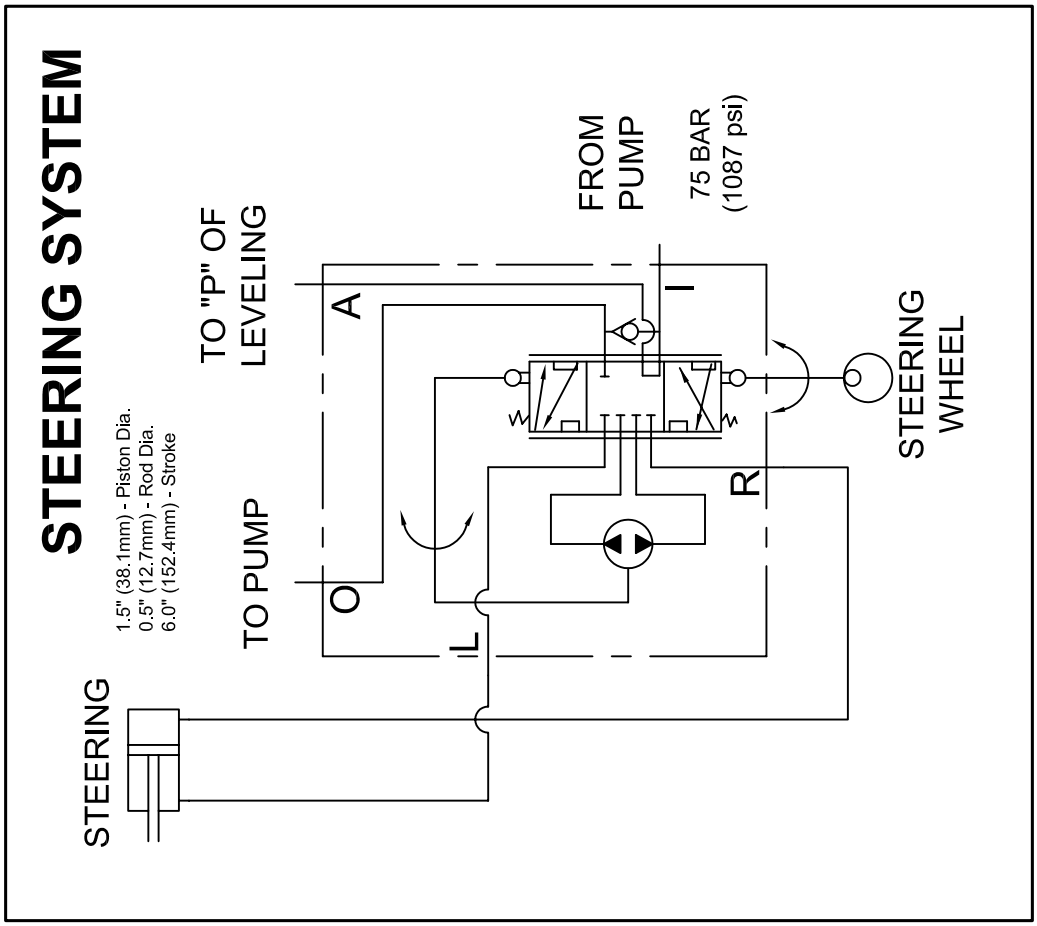
STEERING SYSTEM
1.5" (38.1mm) - Piston Dia.
0.5" (12.7mm) - Rod Dia.
6.0" (152.4mm) - Stroke
STEERING
TO PUMP
TO "P" OF
LEVELING
O
A
L
I
R
FROM
PUMP
75 BAR
(1087 psi)
STEERING
WHEEL

Hydraulic Valve Service Parts

Deck Valve P/N 820158

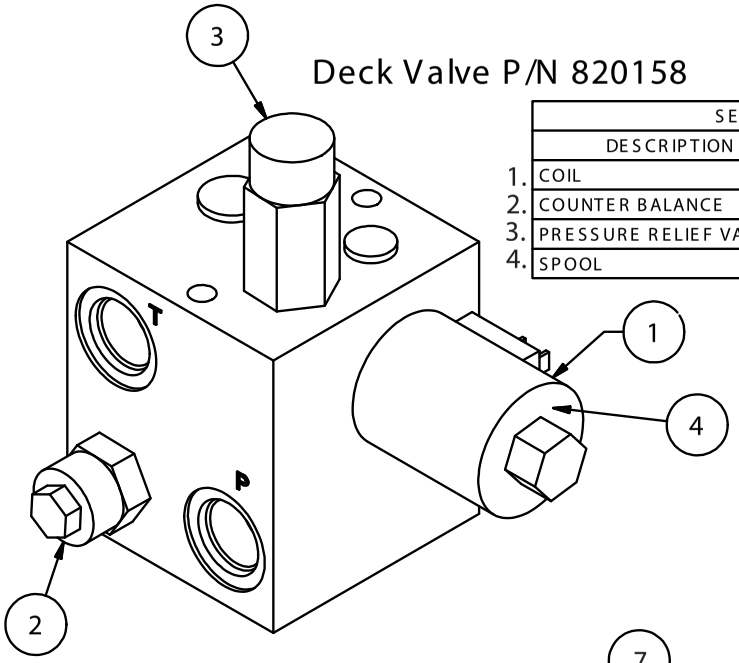

SERVICE PARTS		
DESCRIPTION	QUANTITY	PART #
1. COIL	1	820229
2. COUNTER BALANCE	1	820230
3. PRESSURE RELIEF VALVE	1	820231
4. SPOOL	1	820232

Lift Valve P/N 820159

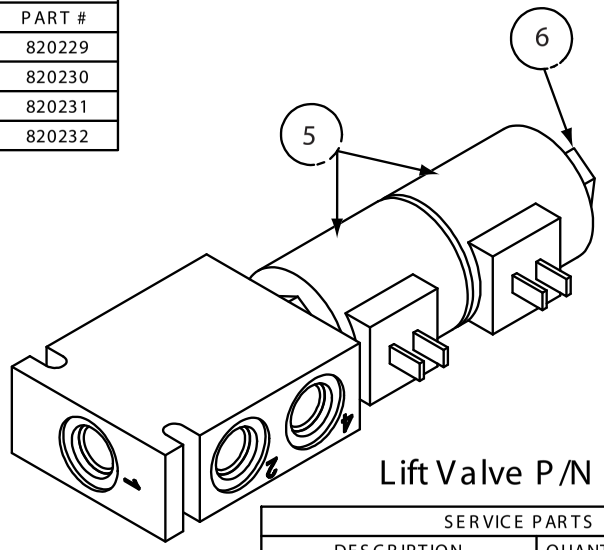

SERVICE PARTS		
DESCRIPTION	QUANTITY	PART #
5. COIL	2	820229
6. SPOOL	1	822006

Leveling Valve P/N 820157

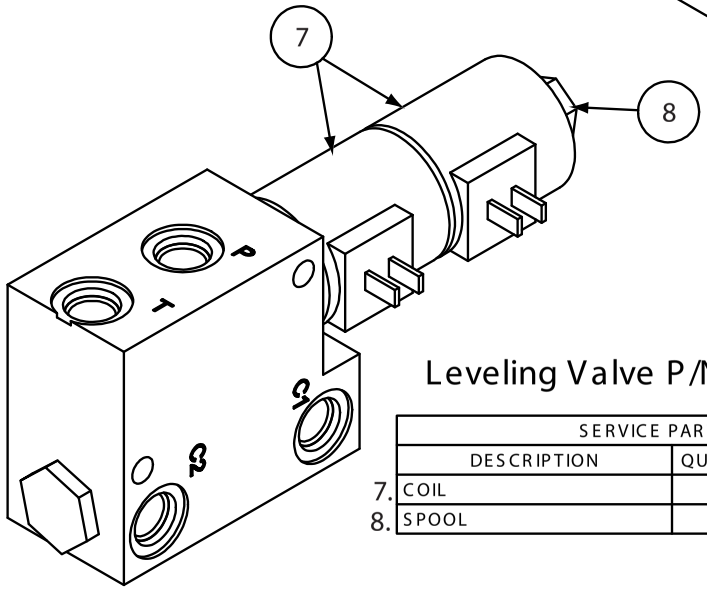

SERVICE PARTS		
DESCRIPTION	QUANTITY	PART #
7. COIL	2	820229
8. SPOOL	1	820234

7/19/2004

Hydraulic Cylinder Service Parts

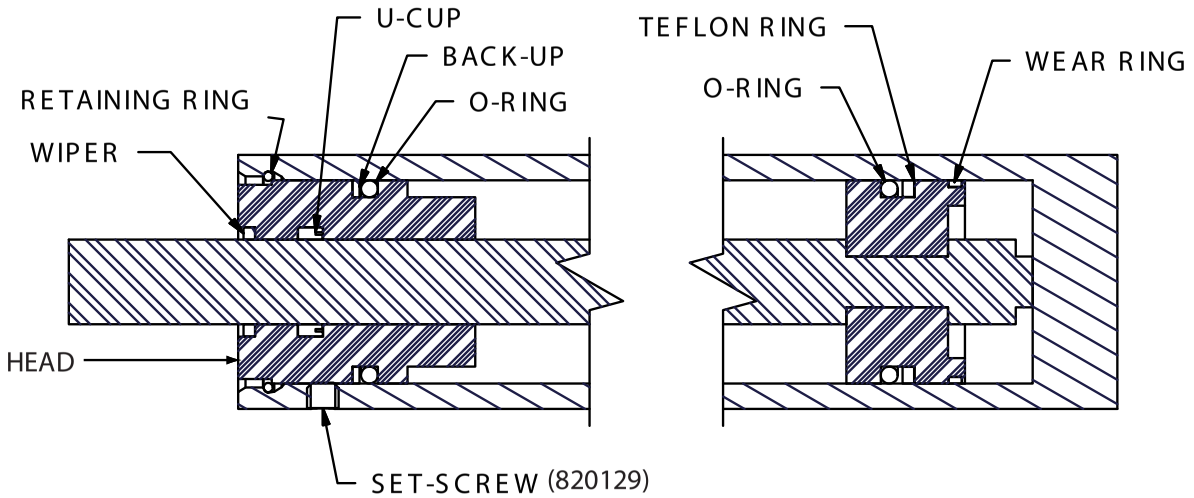

CYLINDER / PART NUMBER		SEAL KIT	RETAINING RING	HEAD
FRONT DECK LIFT	820154	820227	820226	822024
REAR DECK LIFT	820155	820225	820224	822025
LEVELING	823017			
	823011*	820030	820127	
STEERING	520001	520139	520459	
	823015**	520139	520459	

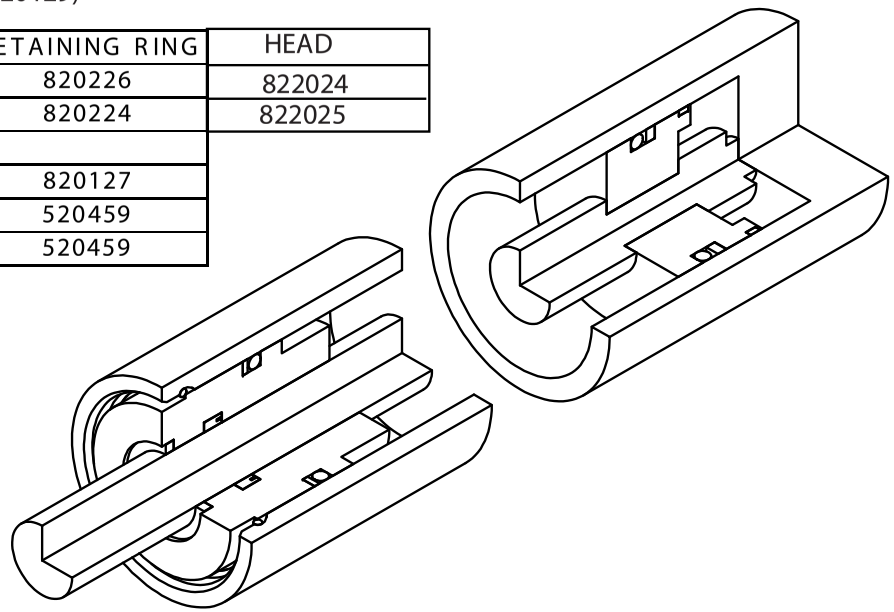

* 72LC AFTER S/N 04A21
** 72LC AFTER S/N 04A41

7/19/2004

Deck Drive System

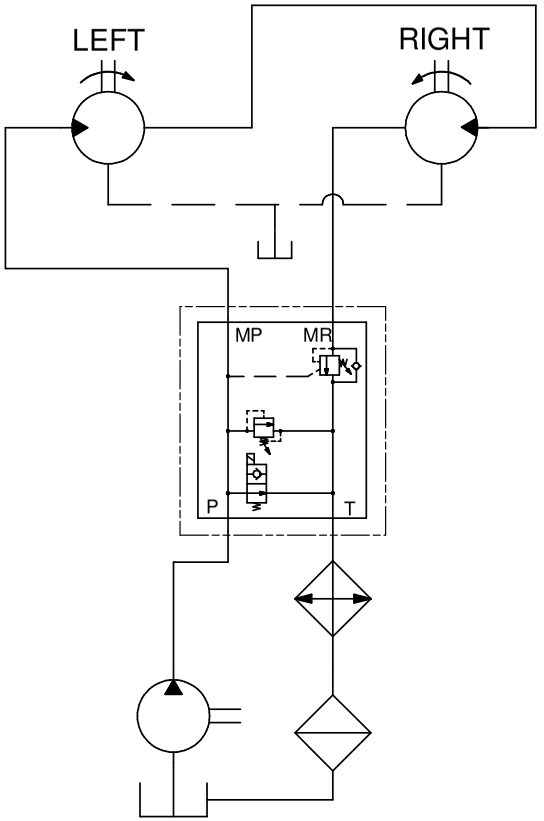

PART #	QUANTITY	DESCRIPTION
110529	2	BOLT, 5/16-18 X 4.5
110608	2	NUT, 5/16-18
120030	2	ADAPTER, 10MJ-12MB90
120125	3	ADAPTER, BULKHEAD, 8MJ-8MJ
120126	1	ADAPTER, BULKHEAD, 4MJ-4MJ
120235	2	ADAPTER, 4MJ-4MB90
120251	8	ADAPTER, 10MJ-10MB
520099	1	CLAMP, HOSE #12 .75"
802003	1	OIL COOLER
820137	1	HOSE, CASE DRAIN
820158	1	DECK VALVE
820169	1	HOSE, "T" SIDE OF VALVE TO OIL COOLER
820171	1	HOSE, "MR" SIDE OF VALVE TO BACK RIGHT BULKHEAD
820172	1	HOSE, "MP" SIDE OF VALVE TO FRONT RIGHT BULKHEAD
820173	1	HOSE, "P" SIDE OF VALVE TO BACK LEFT BULKHEAD
820210	1	HOSE, RIGHT DECK MOTOR TO BACK RIGHT BULKHEAD
820211	1	HOSE, FRONT RIGHT BULKHEAD TO LEFT DECK MOTOR
820212	1	HOSE, LEFT DECK MOTOR TO RIGHT DECK MOTOR
820242	1	HOSE, OIL COOLER TO INTANK FILTER
822007	1	HOSE, CHARGE PUMP TO BACK LEFT BULKHEAD
822009	1	HOSE, RESERVOIR TO CHARGE PUMP SUCTION
822022	1	HOSE, CASE DRAIN BULKHEAD TO RESEVOIR
823016	1	MOTOR, DECK LEFT, ULTRA 1.65
823016	1	MOTOR, DECK RIGHT, ULTRA 1.65

7/14/2004

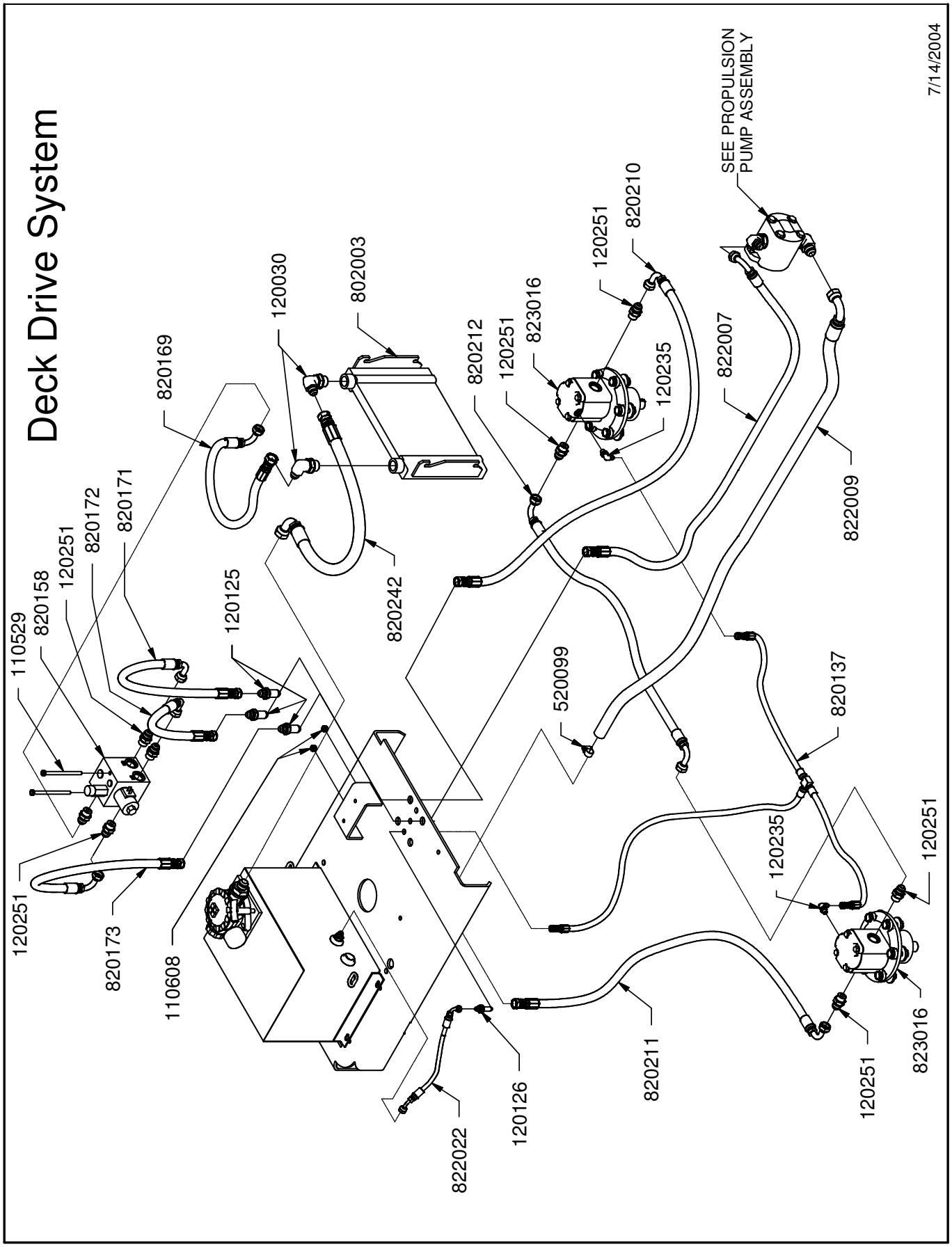
Deck Drive System
7/14/2004
SEE PROPULSION PUMP ASSEMBLY
820210
120251
823016
120235
822007
822009
820212
120251
820169
120030
802003
820242
820171
820172
120251
820158
110529
120125
520099
820137
120235
120251
120251
820173
110608
820211
120126
822022
120251
823016

Deck Lift
Hydraulic Assembly

PART #	QUANTITY	DESCRIPTION
110406	2	BOLT, 1/4-20 X 2.25
110609	2	NUT, 1/4-20
110667	2	WASHER, 1/4" LOCK
110673	4	WASHER, 1/4" FLAT STANDARD
120319	8	ADAPTER, 6MJ-6MB
820154	1	DECK LIFT CYLINDER, FRONT
820155	1	DECK LIFT CYLINDER, REAR
820159	1	VALVE, DECK LIFT
820179	1	HOSE, #4 DECK LIFT TO BARREL END FRONT
820184	2	HOSE, .25 X 26.96, 4-6FJX90M
820190	1	HOSE, #2 DECK LIFT TO ROD END BACK
822014	1	HOSE, DECK LIFT #1 TO FILTER

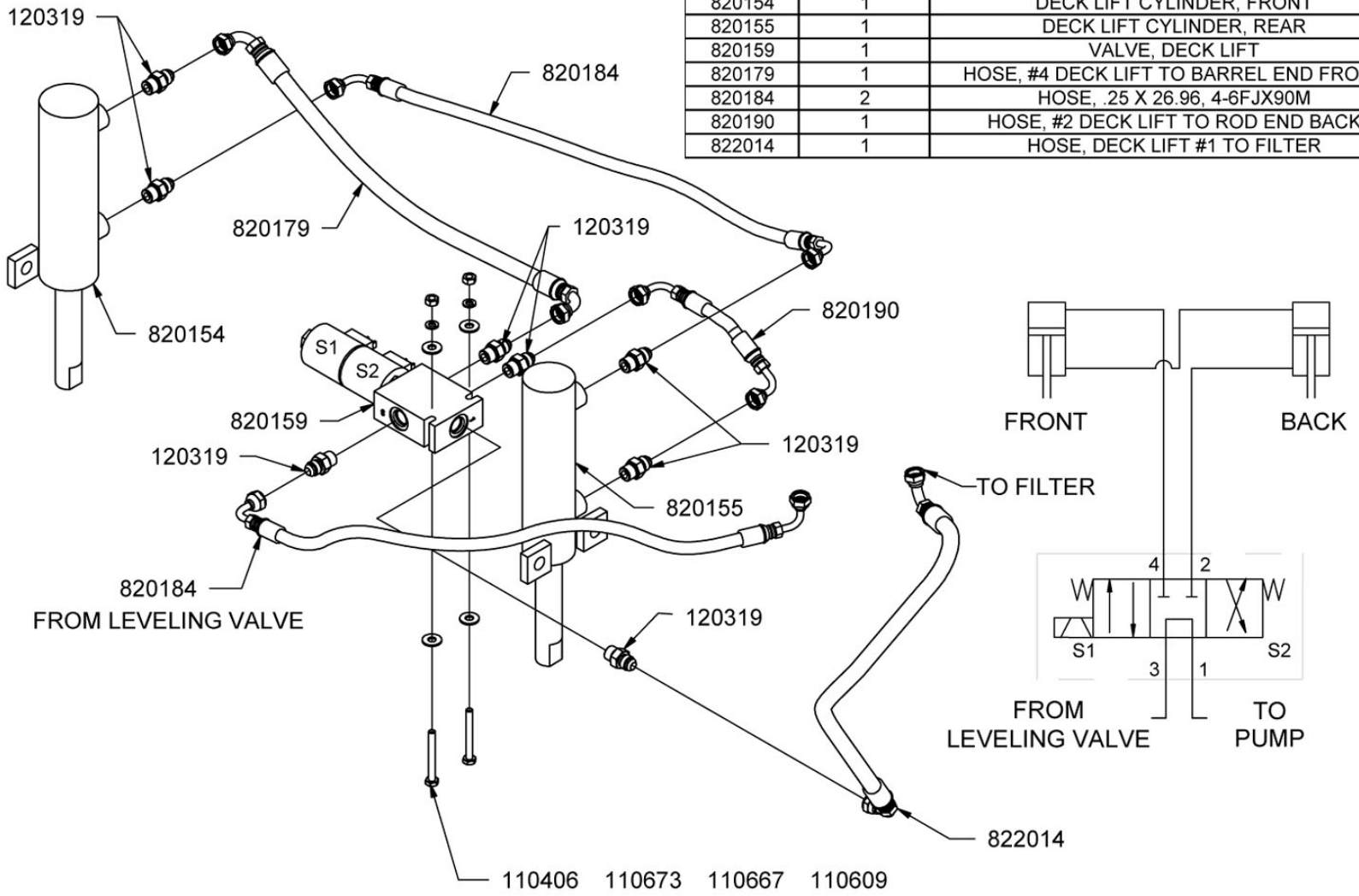

2/25/2004

PART #	QUANTITY	DESCRIPTION
110378	4	BOLT, 5/16-18 X 2.0
120224	4	ADAPTER, 10MJ-10MB90
520099	2	CLAMP, HOSE #12 .75"
820015	2	MOTOR, WHEEL
820027	4	HOSE CLAMP ASSY
820213	1	HOSE, PROPULSION PUMP TO FRONT WHEEL MOTOR
820214	1	HOSE ASSY, FRONT WHEEL MOTOR TO REAR WHEEL MOTOR
820215	1	HOSE, PROPULSION PUMP TO REAR WHEEL MOTOR
822008	1	HOSE ASSY, SUCTION PROPULSION
822011	1	HOSE ASSY, CASE DRAIN PROPULSION

Propulsion Hydraulics Assembly

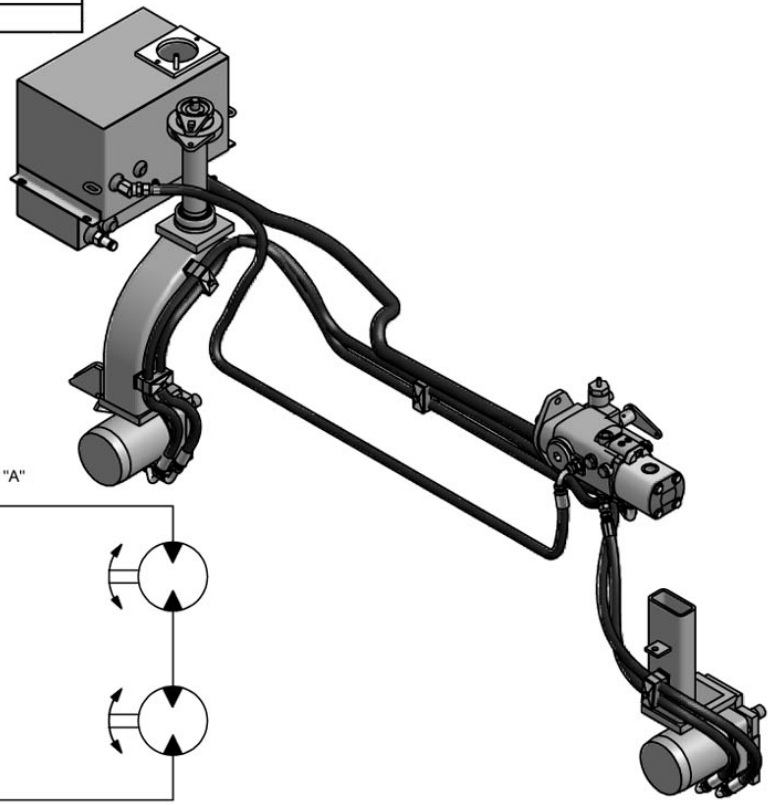

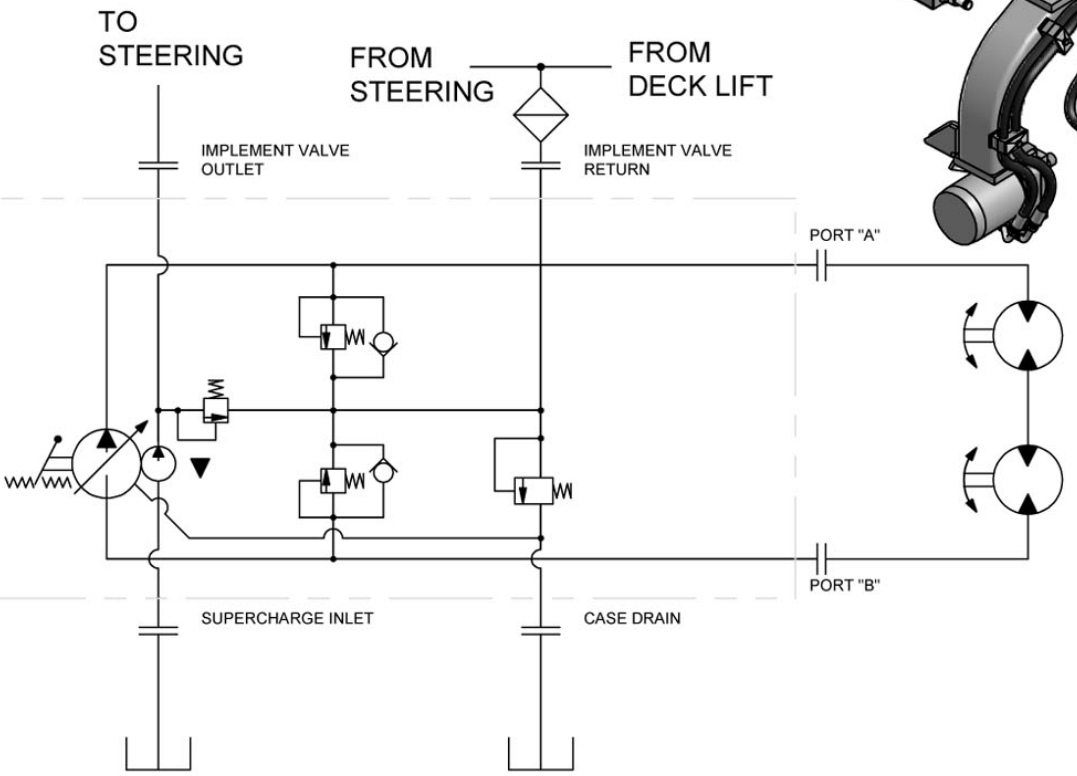

4/8/2004

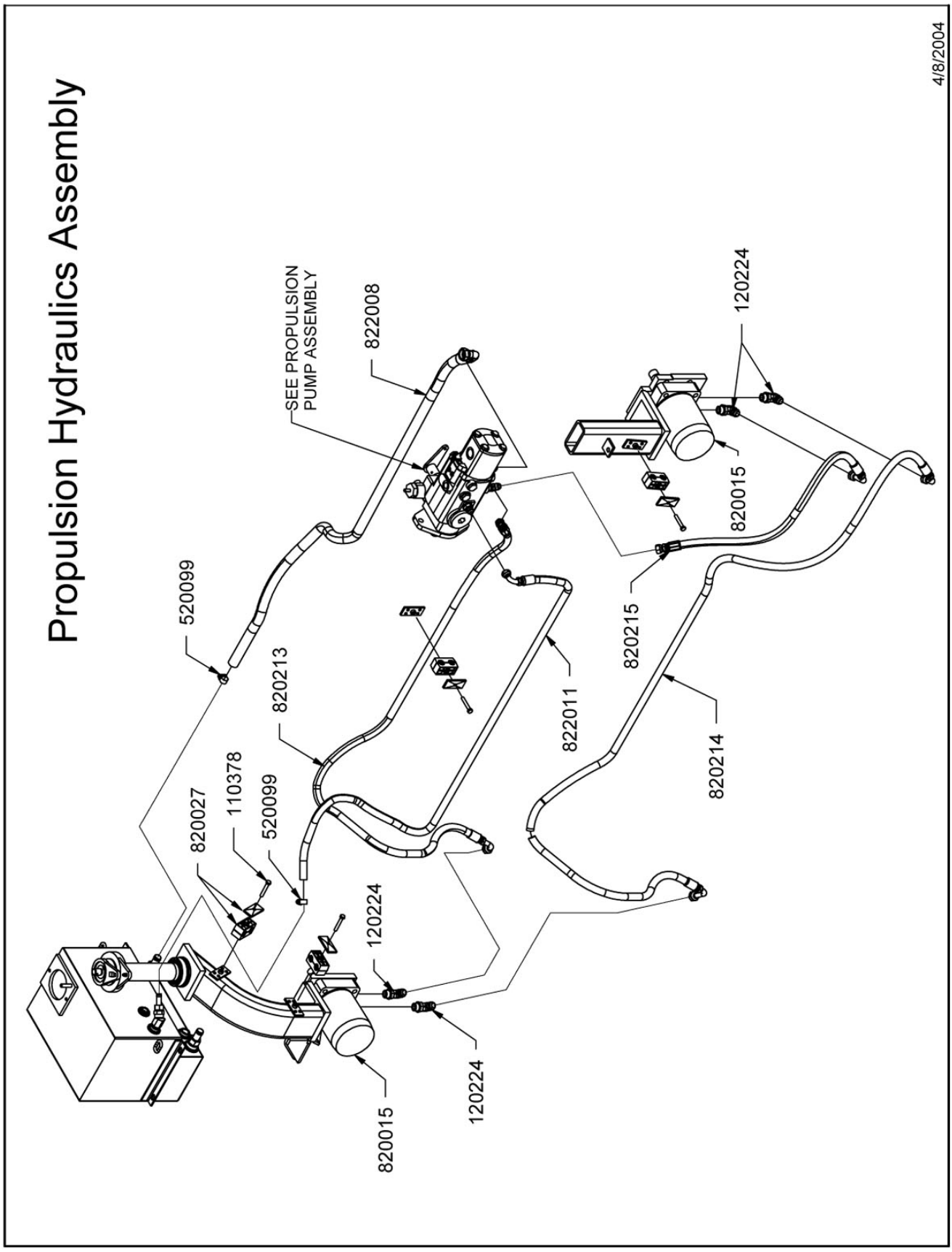
Propulsion Hydraulics Assembly
4/8/2004
SEE PROPULSION PUMP ASSEMBLY
822008
120224
820015
520099
820213
822011
820215
820214
820027
110378
520099
120224
820015
120224

PART #	QUANTITY	DESCRIPTION
110279	1	ROLL PIN, 3/16 X 1.5
110395	2	BOLT, 3/8-16 X 1.0 SHCS
110406	3	BOLT, 1/4-20 X 2.25
110429	2	BOLT, 1/2-13 X 1.5
110526	2	BOLT, M10x1.5 x 40, Gr 10.9
110630	1	NUT, 1/4-20 LOCK (NYLON INSERT)
110658	2	WASHER, 1/2" FLAT STANDARD
110666	2	WASHER, 1/2" LOCK
110667	2	WASHER, 1/4" LOCK
110672	2	WASHER, 3/8" LOCK
120030	1	ADAPTER, 10MJ-12MB90

PART #	QUANTITY	DESCRIPTION
120134	2	ADAPTER, 6MJ-8MB90
120143	1	ADAPTER, 12MJ-10MB
120185	2	ADAPTER, 8MB-8MJ45
120247	1	ADAPTER, 12MJ-16MB90
120277	1	ADAPTER, 8MJ-8MB
500230	1	GREASE ZERK, 1/4-28 90deg
800128	2	BUSHING, IGUS, FOOT PEDAL
800171	1	BELL HOUSING
810691	1	NEUTRAL SAFETY SWITCH BRACKET
810694	2	SPACER, .406 X .26 X .50
815017	1	FOOT PEDAL BRACKET, WELDMENT
815019	1	ACTUATOR ARM WELDMENT
815050	1	SAFETY SWITCH ACTUATOR WELDMENT
820031	1	O-RING, -236
823010	1	PUMP, DECK DRIVE 1.28
823012	1	PUMP, PROPULSION 1.35/.61 CHRG
	822021	1 SEAL KIT
832002	1	SWITCH ROLLER PLUNGER
832035	1	HARNESS, NEUTRAL SAFETY SWITCH
842010	1	PUMP DRIVE COUPLING

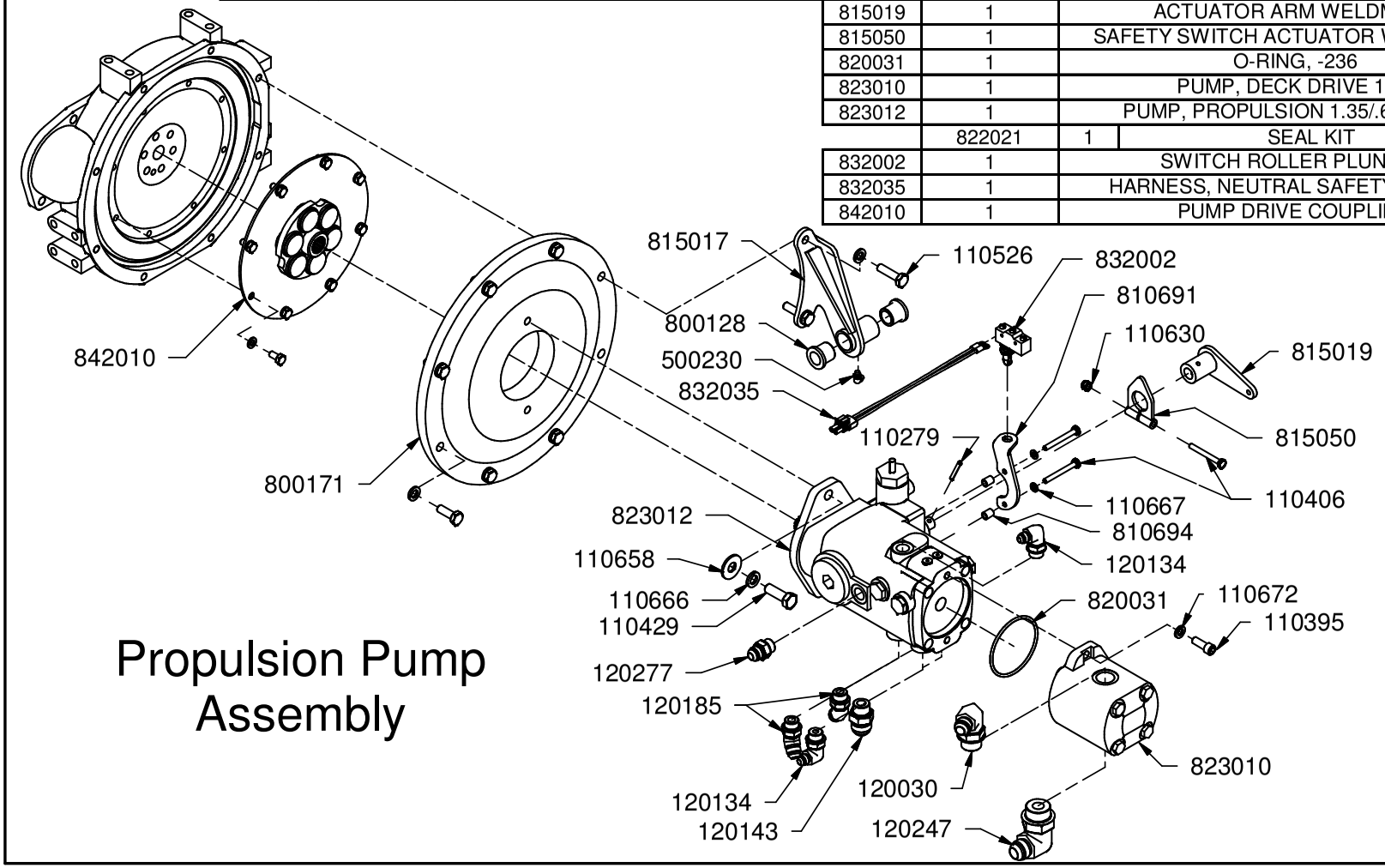

Propulsion Pump Assembly

9/9/2004

PART #	QUANTITY	DESCRIPTION
110064	2	BOLT, 1/4-20 X 1.25 SHCS
110279	1	ROLL PIN, 3/16 X 1.5
110395	2	BOLT, 3/8-16 X 1.0 SHCS
110406	1	BOLT, 1/4-20 X 2.25
110429	2	BOLT, 1/2-13 X 1.5
110526	2	BOLT, M10x1.5 x 40, Gr 10.9
110630	1	NUT, 1/4-20 LOCK (NYLON INSERT)
110658	2	WASHER, 1/2" FLAT STANDARD
110666	2	WASHER, 1/2" LOCK
110667	2	WASHER, 1/4" LOCK
110672	2	WASHER, 3/8" LOCK
120030	1	ADAPTER, 10MJ-12MB90

PART #	QUANTITY	DESCRIPTION
120134	2	ADAPTER, 6MJ-8MB90
120143	1	ADAPTER, 12MJ-10MB
120185	2	ADAPTER, 8MB-8MJ45
120247	1	ADAPTER, 12MJ-16MB90
120277	1	ADAPTER, 8MJ-8MB
500230	1	GREASE ZERK, 1/4-28 90deg
800128	2	BUSHING, IGUS, FOOT PEDAL
800171	1	BELL HOUSING
810691	1	NEUTRAL SAFETY SWITCH BRACKET
810694	2	SPACER, .406 X .26 X .50
815017	1	FOOT PEDAL BRACKET, WELDMENT
815019	1	ACTUATOR ARM WELDMENT
815050	1	SAFETY SWITCH ACTUATOR WELDMENT
820031	1	O-RING, -236
823010	1	PUMP, DECK DRIVE 1.28
823012	1	PUMP, PROPULSION 1.35/.61 CHRG
822021	1	SEAL KIT
832002	1	SWITCH ROLLER PLUNGER
832035	1	HARNESS, NEUTRAL SAFETY SWITCH
842010	1	PUMP DRIVE COUPLING

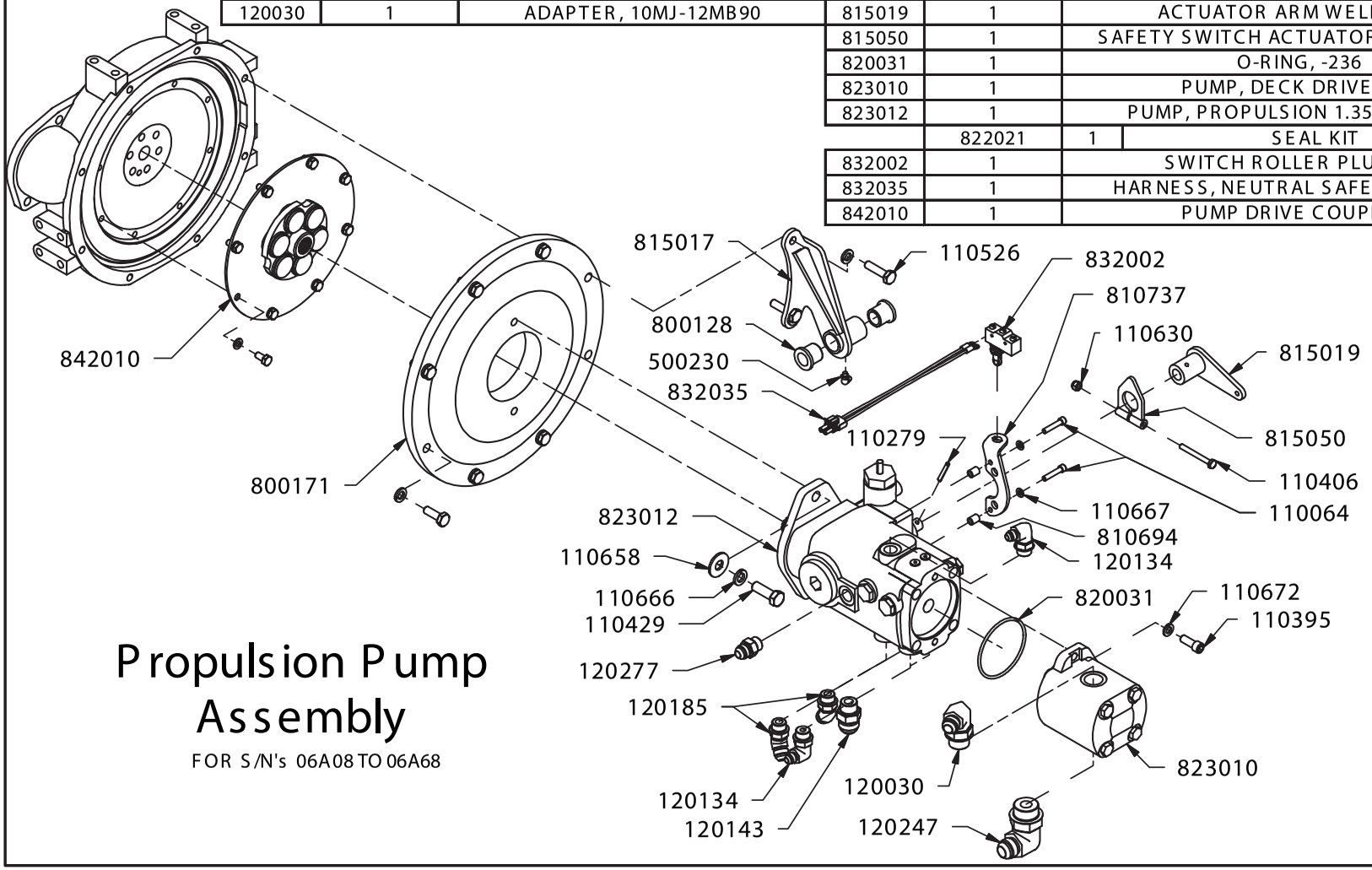

Propulsion Pump Assembly

FOR S/N's 06A08 TO 06A68

2/10/2006

PART #	QUANTITY	DESCRIPTION
110064	2	BOLT, 1/4-20 X 1.25 SHCS
110279	1	ROLL PIN, 3/16 X 1.5
110395	2	BOLT, 3/8-16 X 1.0 SHCS
110406	1	BOLT, 1/4-20 X 2.25
110429	2	BOLT, 1/2-13 X 1.5
110630	1	NUT, 1/4-20 LOCK (NYLON INSERT)
110658	2	WASHER, 1/2" FLAT STANDARD
110666	2	WASHER, 1/2" LOCK
110667	2	WASHER, 1/4" LOCK
110672	2	WASHER, 3/8" LOCK
120030	1	ADAPTER, 10MJ-12MB90

PART #	QUANTITY	DESCRIPTION
120134	2	ADAPTER, 6MJ-8MB90
120143	1	ADAPTER, 12MJ-10MB
120185	2	ADAPTER, 8MB-8MJ45
120247	1	ADAPTER, 12MJ-16MB90
120277	1	ADAPTER, 8MJ-8MB
800171	1	BELL HOUSING
810691	1	NEUTRAL SAFETY SWITCH BRACKET
810694	2	SPACER, .406 X .26 X .50
815019	1	ACTUATOR ARM WELDMENT
815050	1	SAFETY SWITCH ACTUATOR WELDMENT
820031	1	O-RING, -236
823010	1	PUMP, DECK DRIVE 1.28
823008	1	PUMP, PROPULSION 1.35/ CHRG .43
	822021	1 SEAL KIT
832002	1	SWITCH ROLLER PLUNGER
832035	1	HARNESS, NEUTRAL SAFETY SWITCH
842010	1	PUMP DRIVE COUPLING

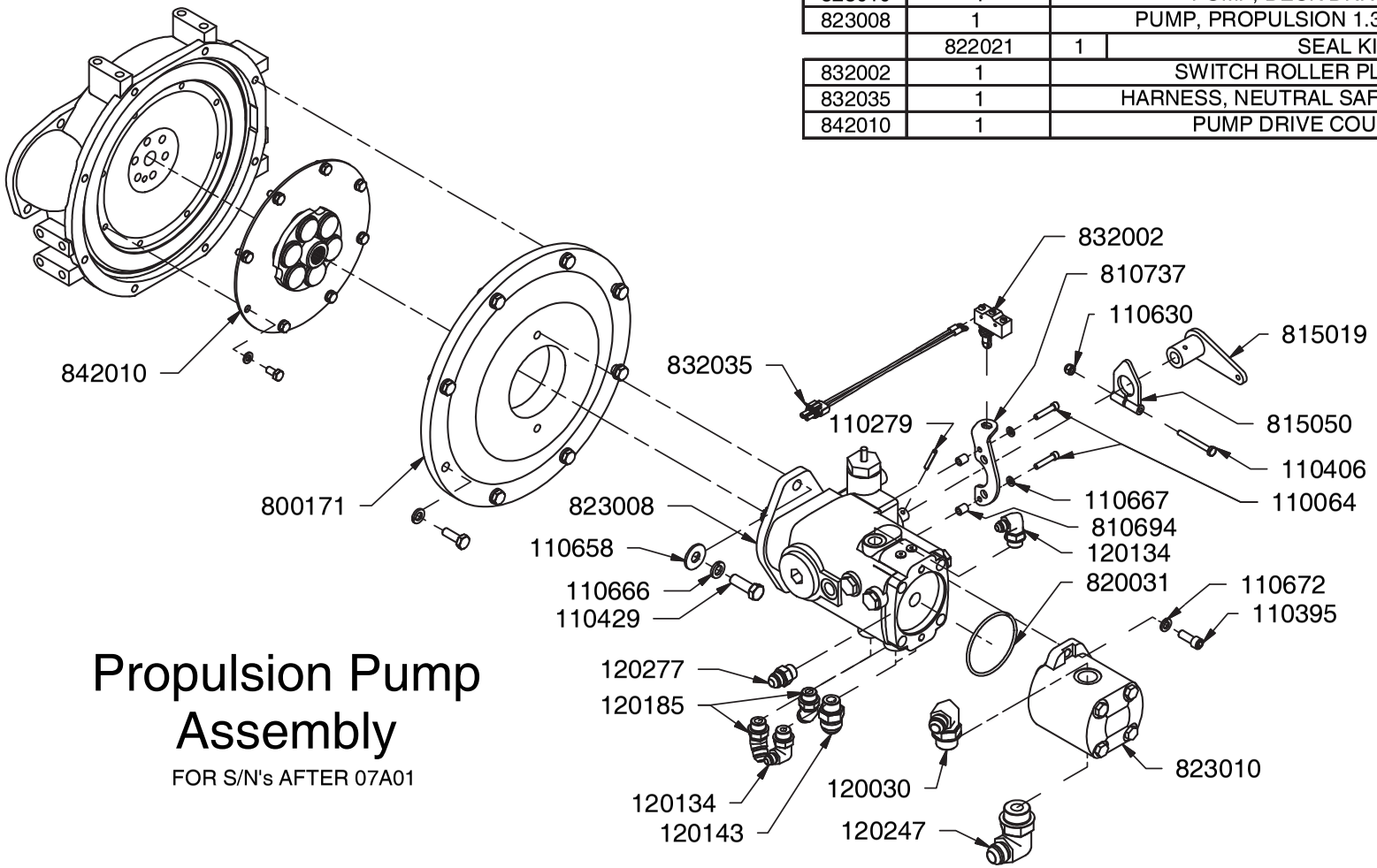

Propulsion Pump Assembly

FOR S/N's AFTER 07A01

12/13/2006

PART #	QUANTITY	DESCRIPTION
110282	2	BOLT, M10x1.5 x 20 Gr 10.9
110440	4	BOLT, 3/8-16 X 1, WIZ FLANGE
110515	2	BOLT, 1/4-20 X .50
110623	4	NUT, 5/16-24
110645	4	NUT, 3/8-16 WIZ FLANGE
110671	2	WASHER, 7/16" LOCK
120092	1	ADAPTER, 6MJ-6MJ-6MB
120126	2	ADAPTER, BULKHEAD, 4MJ-4MJ
120222	1	ADAPTER, 6MJ-6MB90
120235	2	ADAPTER, 4MJ-4MB90
	1	FILTER ELEMENT
520162	1	STEERING COLUMN
520163	1	STEERING PUMP
550004	1	STEERING WHEEL
810623	1	OIL FILTER BRACKET

PART #	QUANTITY	DESCRIPTION
815013	1	STEERING PUMP MOUNT
820174	1	HOSE, LT STEERING VALVE TO BULKHEAD
820175	1	HOSE, RT STEERING VALVE TO BULKHEAD
820176	1	HOSE, ROD END TO LT BULKHEAD
820177	1	HOSE, BARREL END TO RT BULKHEAD
820181	1	HOSE, AUX OF STEERING TO "P" OF LEVELING
822010	1	PRESSURE SIDE OF PROP TO IN SIDE OF STEERING
822012	1	HOSE,STEERING OUT TO FILTER
822013	1	HOSE, FILTER TO PUMP
822020	1	FILTER HEAD, SPIN ON, 6 FB PORTS
823015	1	STEERING CYLINDER

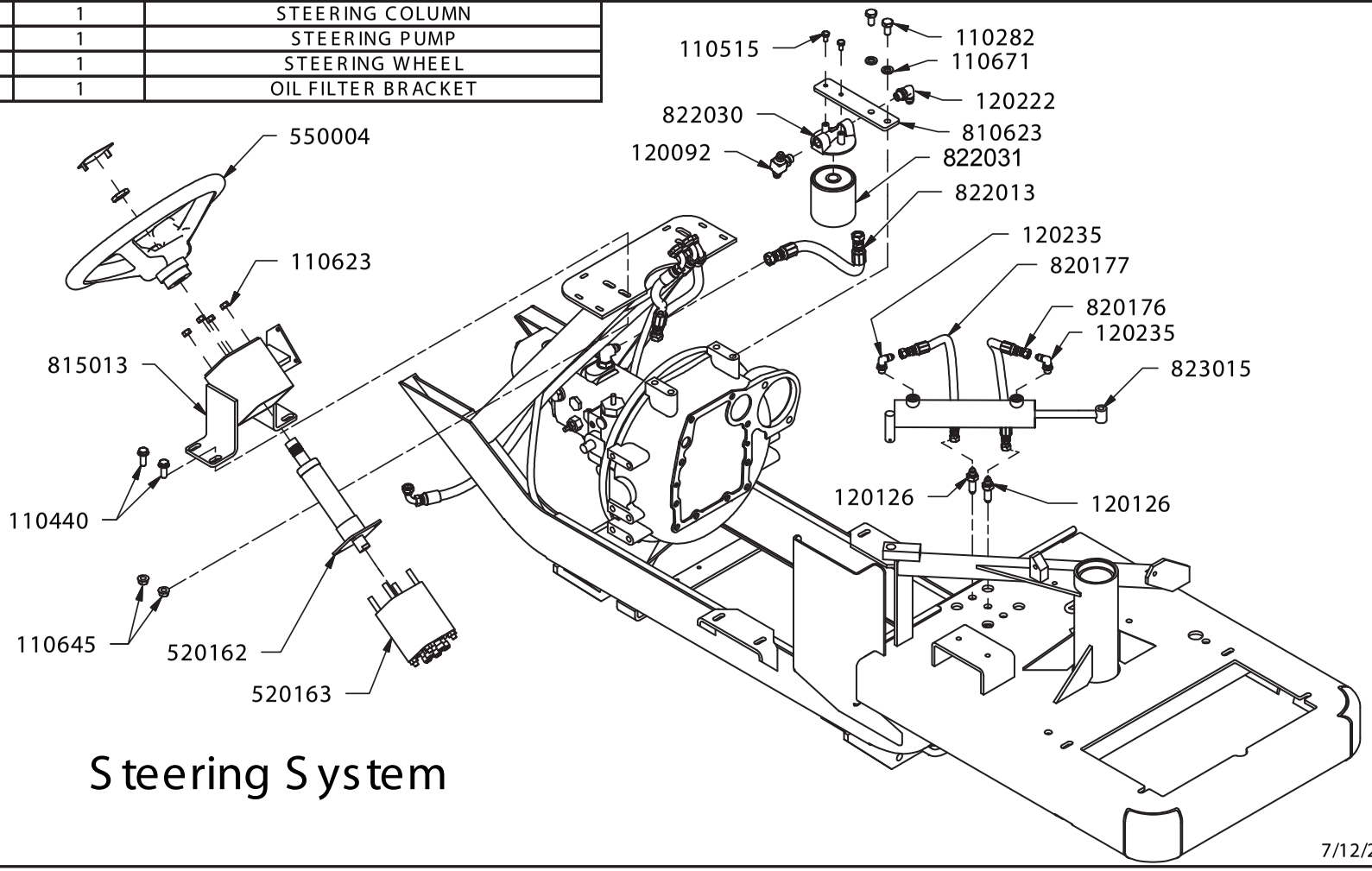

Steering System

7/12/2004

Steering System

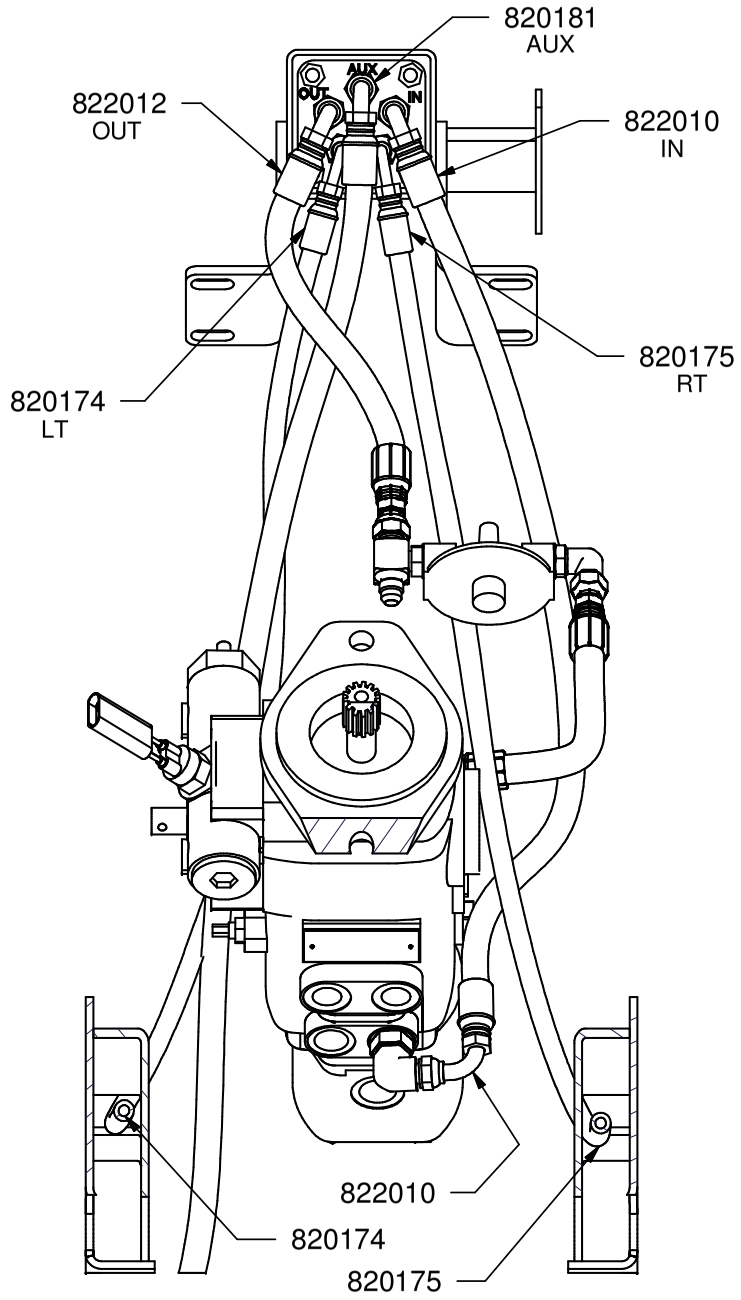

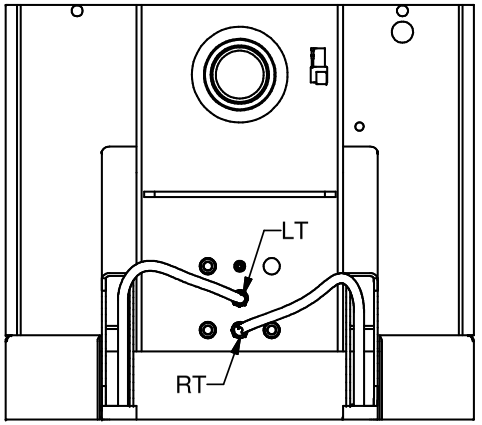

VIEW FROM BOTTOM

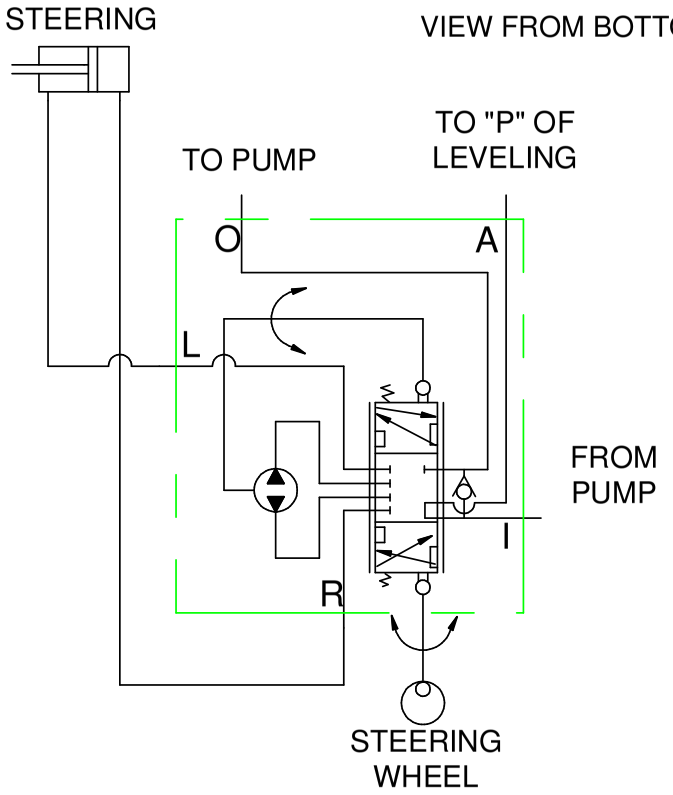

7/12/2004

Leveling Hydraulics Assembly

FOR S/N's AFTER 04A01
S/N 04A01-05A65 #823017 Dalton Bearing Hydraulics
S/N 06A01 and above #823017 Cross Manufacturing
S/N 06A46 and above #823018 was added as left cylinder
(prior to 06A46 both left and right cylinders were alike)

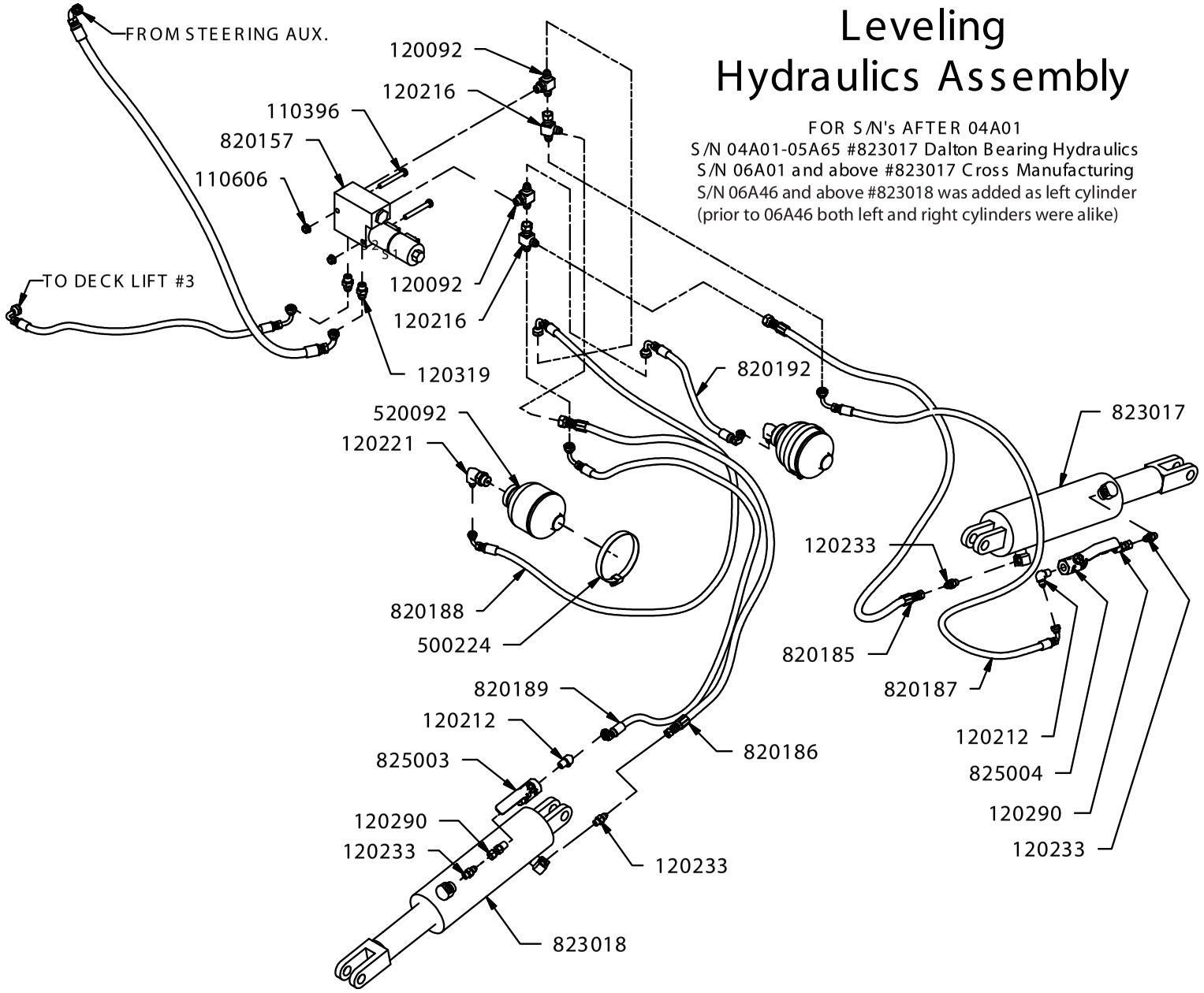

2/22/2006

Leveling Hydraulics Assembly

FOR S/N's AFTER 04A01
S/N 04A01-05A65 #823017 Dalton Bearing Hydraulics
S/N 06A01 and above #823017 Cross Manufacturing
S/N 06A46 and above #823018 was added as left cylinder
(prior to 06A46 both left and right cylinders were alike)

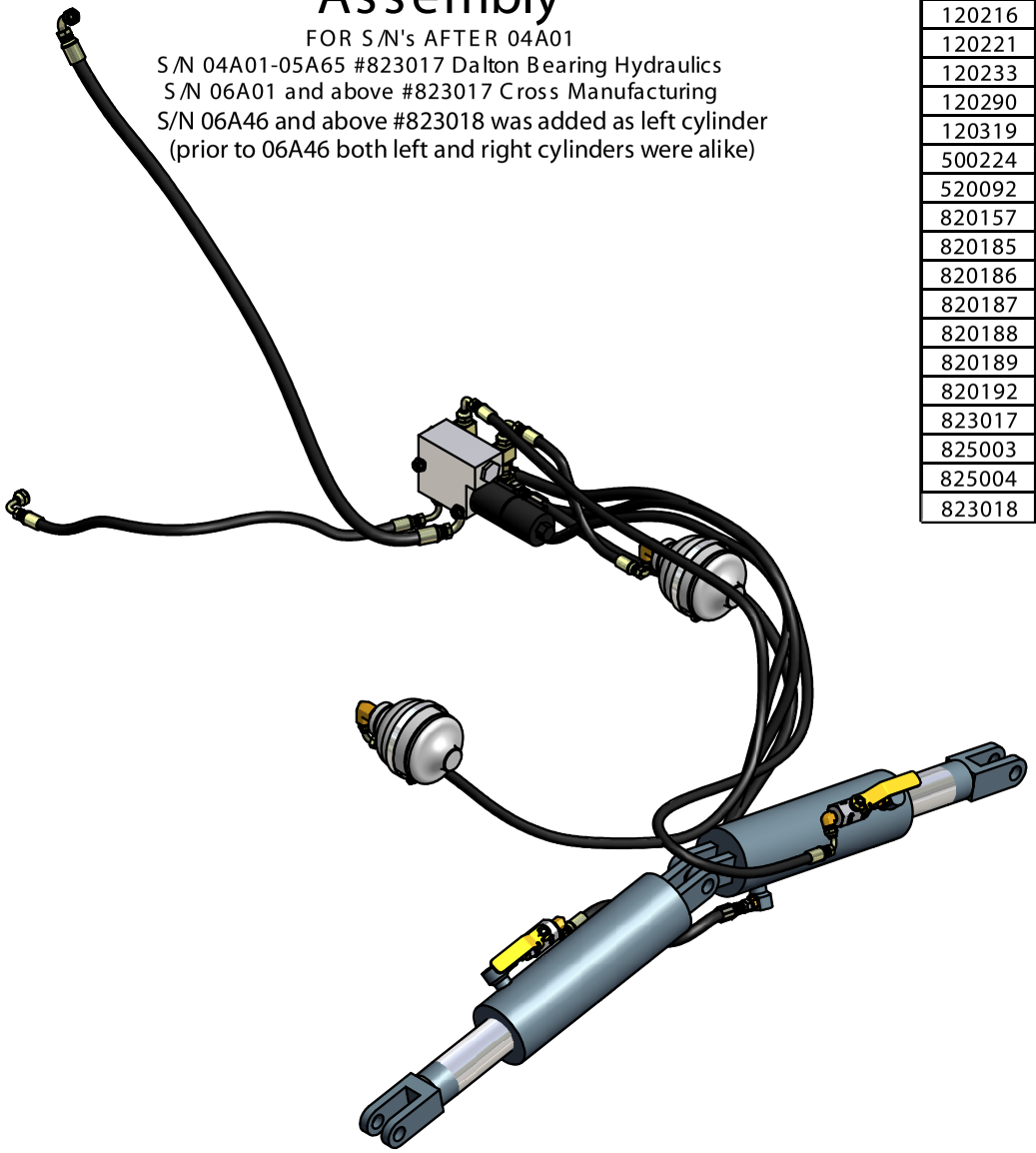

PART #	QTY	DESCRIPTION
110396	2	BOLT, 5/16-18 X 2.5
110606	2	NUT, 5/16-18 WIZ FLANGE
120092	2	ADAPTER, 6MJ-6MJ-6MB
120212	2	ADAPTER, 4MJ-4MP90
120216	2	ADAPTER, 6MJ-6FJX-6MJ
120221	2	ADAPTER, 4MJ-8MB90
120233	4	ADAPTER, 4MJ-4MB
120290	2	ADAPTER, 4FJX-4MP
120319	4	ADAPTER, 6MJ-6MB
500224	2	CLAMP, HOSE #56 4.00"
520092	2	HYDRO PNEUMATIC ACCUMULATOR
820157	1	VALVE, LEVELING
820185	1	HOSE, C1 OF LEVELING TO BARREL OF RIGHT
820186	1	HOSE, C2 OF LEVELING TO BARREL END OF LEFT
820187	1	HOSE, C2 OF LEVELING TO ROD END RIGHT
820188	1	HOSE, C2 OF LEVELING TO LEFT ACCUMULATOR
820189	1	HOSE, C1 OF LEVELING TO ROD END LEFT
820192	1	HOSE, C1 OF LEVELING TO RIGHT ACCUMULATOR
823017	1	CYLINDER, 3.0" X 6.54" X 2.0", LEVELING, RIGHT
825003	1	BALL VALVE W/HANDLE LEFT
825004	1	BALL VALVE W/HANDLE RIGHT
823018	1	CYLINDER, 3.0" X 6.54" X 2.0", LEVELING, LEFT

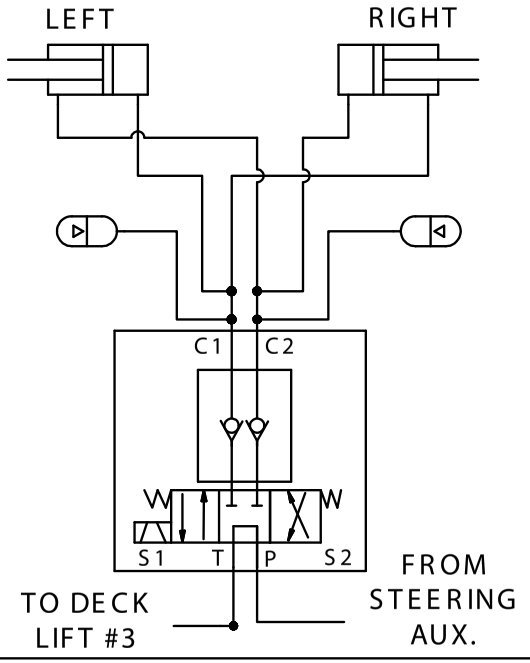

2/22/2006

Reservoir & Filter Assembly

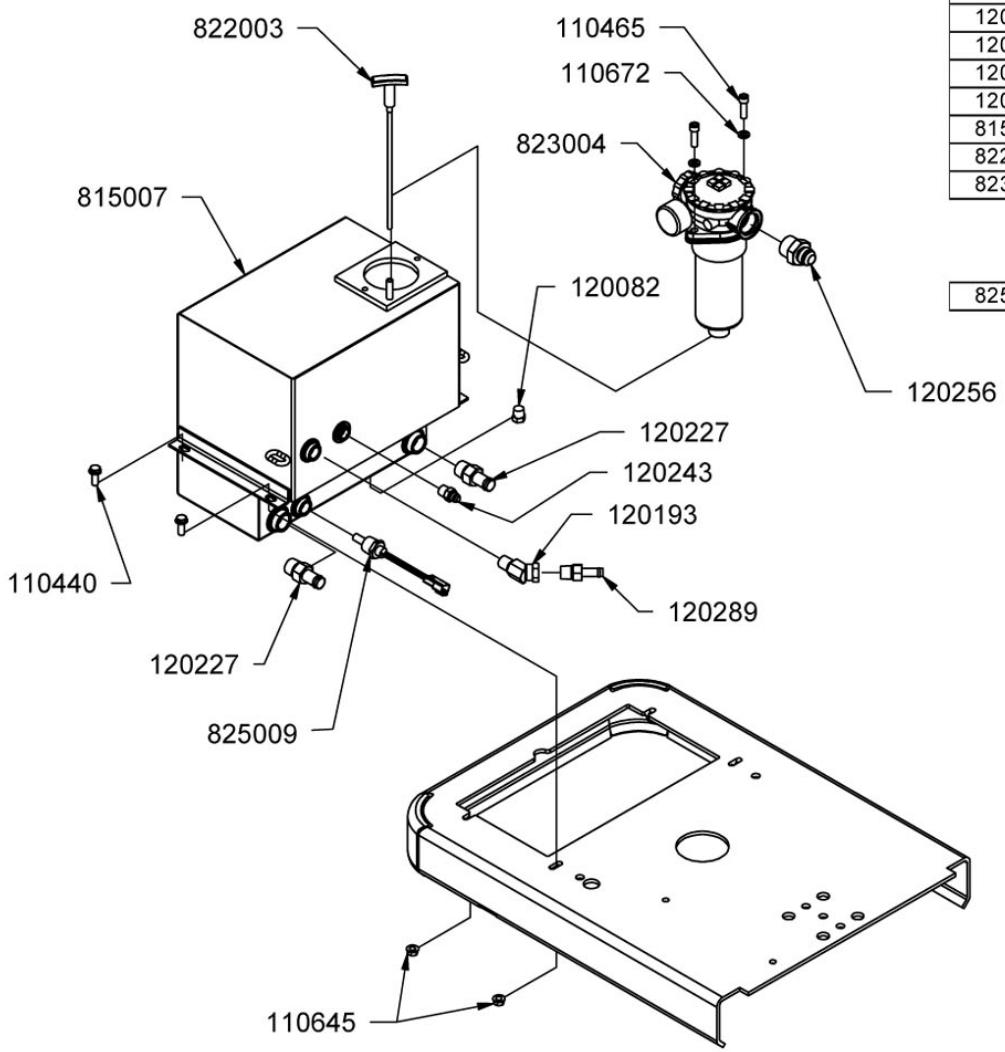

PART #	QUANTITY	DESCRIPTION
110440	4	BOLT, 3/8-16 X 1, WIZ FLANGE
110465	2	BOLT, 3/8-16 X 1.25 SHCS
110645	4	NUT, 3/8-16 WIZ FLANGE
110672	2	WASHER, 3/8" LOCK
120082	1	PLUG, 3/8" PIPE HEX
120193	1	ADAPTER, 8MP-8FPX45
120227	2	ADAPTER, 12BH-12MP
120243	1	ADAPTER, 6MJ-6MP
120256	1	ADAPTER, 12MJ-16MB
120289	1	ADAPTER, 8BH-8MP
815007	1	7.5 GAL OIL RESERVOIR WELDMENT
822003	1	DIP STICK
823004	1	FILTER ASSY W/ELEMENT
822002	1	FILTER ELEMENT
822017	1	GAUGE, OIL FILTER
822018	1	FILTER BREATHER
825009	1	HIGH OIL TEMP SWITCH ASSY

4/9/2004

Electrical System

PART #	QUANTITY	DESCRIPTION	PART #	QUANTITY	DESCRIPTION
110290	1	NUT, 1/4-20 WIZ FLANGE	530034	1	FLASHER
110430	2	BOLT, 1/4-20 X 1-1/4	530051	1	GROUND CABLE
110464	4	BOLT, 1/4-20 X 1.0	530111	7	RELAY
110468	1	BOLT, 1/4-20 X 0.75, WIZ FLANGE	530118	2	HAZARD LIGHT
110609	8	NUT, 1/4-20	815024	1	BATTERY HOLD DOWN WELDMENT
110623	2	NUT, 5/16-24	815040	1	RELAY & FUSE BLOCK MOUNT WELDMENT A180
110631	4	NUT, 10-24 LOCK NYLON INSERT	830062	1	STARTER TERMINAL COVER
110667	8	WASHER, 1/4" LOCK	830063	1	POSITIVE BATTERY CABLE
110673	4	WASHER, 1/4" FLAT STANDARD	832001	1	STARTER GROUND
132014	1	INSULATOR CAP, (ALTERNATOR)	832011	1	BATTERY
132015	1	BATTERY BOOT, RED	835018	1	MERCURY SWITCH ENCLOSURE, DEUTSCH ASSY
132016	1	BATTERY BOOT, BLACK	835019	1	HEADLIGHT LEFT, DEUTSCH ASSY
510094	4	SCREW, 10-24 X 1, RHMS	835020	1	HEADLIGHT RIGHT, DEUTSCH ASSY

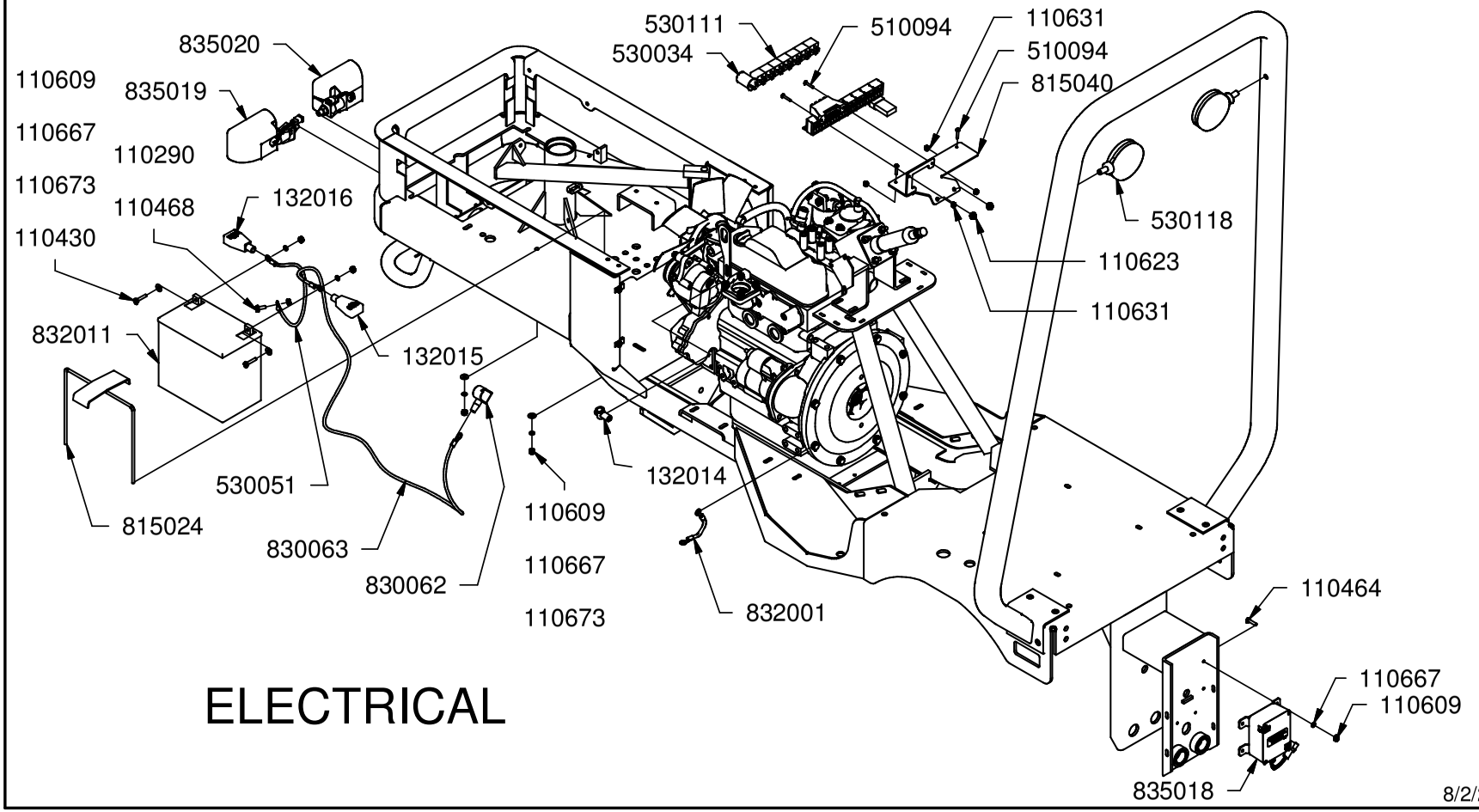

ELECTRICAL

8/2/2004

Mercury Switch Assembly

PART #	QUANTITY	DESCRIPTION
110090	2	WASHER, #10 FLAT STANDARD
110267	2	SCREW, 10-24 X 0.3125, RHMS
110561	4	BOLT, 1/4-20 X .75
110631	5	NUT, 10-24 LOCK NYLON INSERT
110709	1	SCREW, 10-24 X 0.75, WASHE HD SCREW
130046	2	TERMINAL, OPEN BARREL PIN, 14-16 GA
130047	1	CONNECTOR, 2 CAVITY, DEUTSCH DT (DT-04-2P)
130048	1	SECONDARY LOCK, DEUTSCH DT (W2P)
132003	2	CLAMP, ADEL AC8 .265 HOLE
200192	2	PLUG
510094	6	SCREW, 10-24 X 1, RHMS
730010	2	TERMINAL, RING, 14-16 GA., 10-32
800117	1	ENCLOSURE, MERCURY SWITCH
800118	1	SPRING, MERCURY SWITCH
800119	2	SPRING, ANTI-ROTATION
800120	1	LIQUID TIGHT FITTING
800121	2	DECAL, CONTAINS MERCURY
800122	1	DECAL, LEVEL ADJUSTMENT
802021	2	DECAL, SEAL
810371	1	BASE PLATE, MERCURY SWITCH
810372	1	PIVOT, MERCURY SWITCH BOTTOM
810373	1	PIVOT, MERCURY SWITCH TOP
810374	1	MOUNT, LIMIT SCREW
810375	2	MOUNTING BRACKET
830020	2	COMUS MERCURY SWITCH

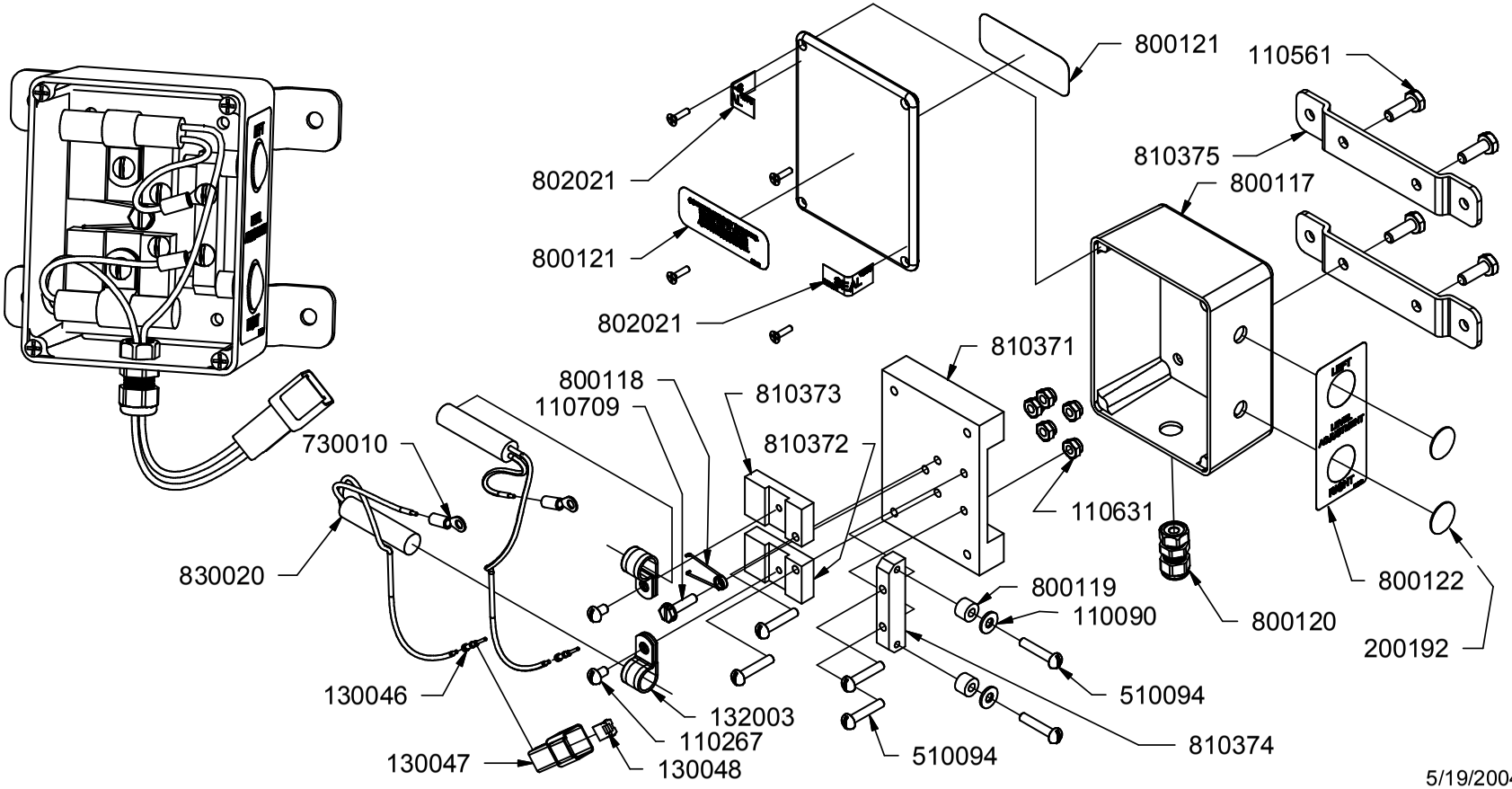

5/19/2004

Switches & Gauges

PART #	QUANTITY	DESCRIPTION
530009	1	HOUR METER
530064	1	OIL PRESSURE GAUGE
730006	1	INDICATOR LIGHT
830002	1	VOLT METER
830008	1	TEMPERATURE GAUGE
830018	1	IGNITION SWITCH
830023	--	KEY
832003	1	SWITCH, PADDLE, CARLING (280063)
832004	1	SWITCH, PADDLE, CARLING (29261)
832007	2	SWITCH MOUNT, END
832024	3	MOUNT, SWITCH (VMS)
835009	1	SWITCH, LEVELING (MANUAL OVERRIDE)
835010	1	SWITCH, LEVELING RIGHT-LEFT

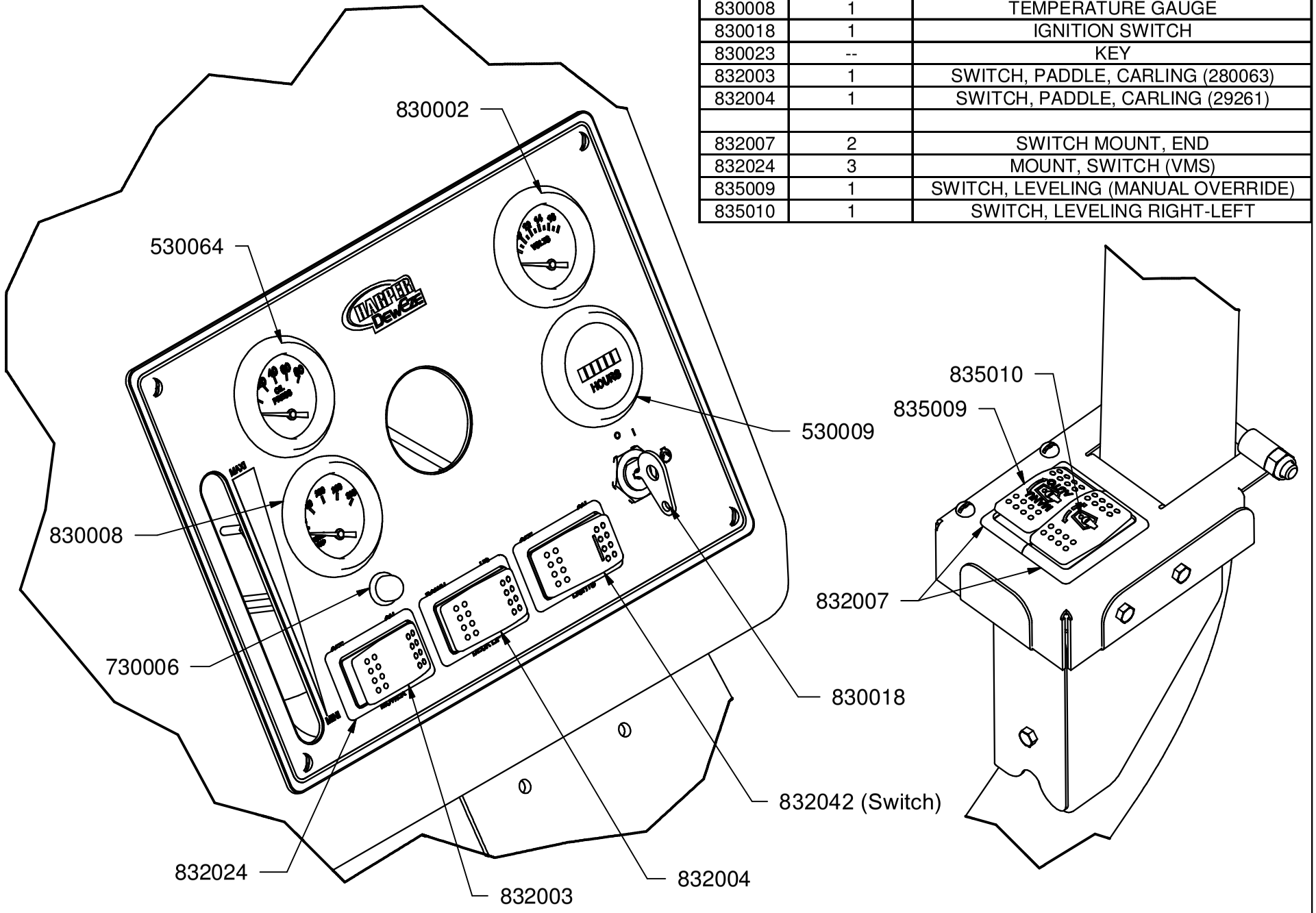

7/28/2004

Electrical Harness TNV

AFTER S/N 04A41

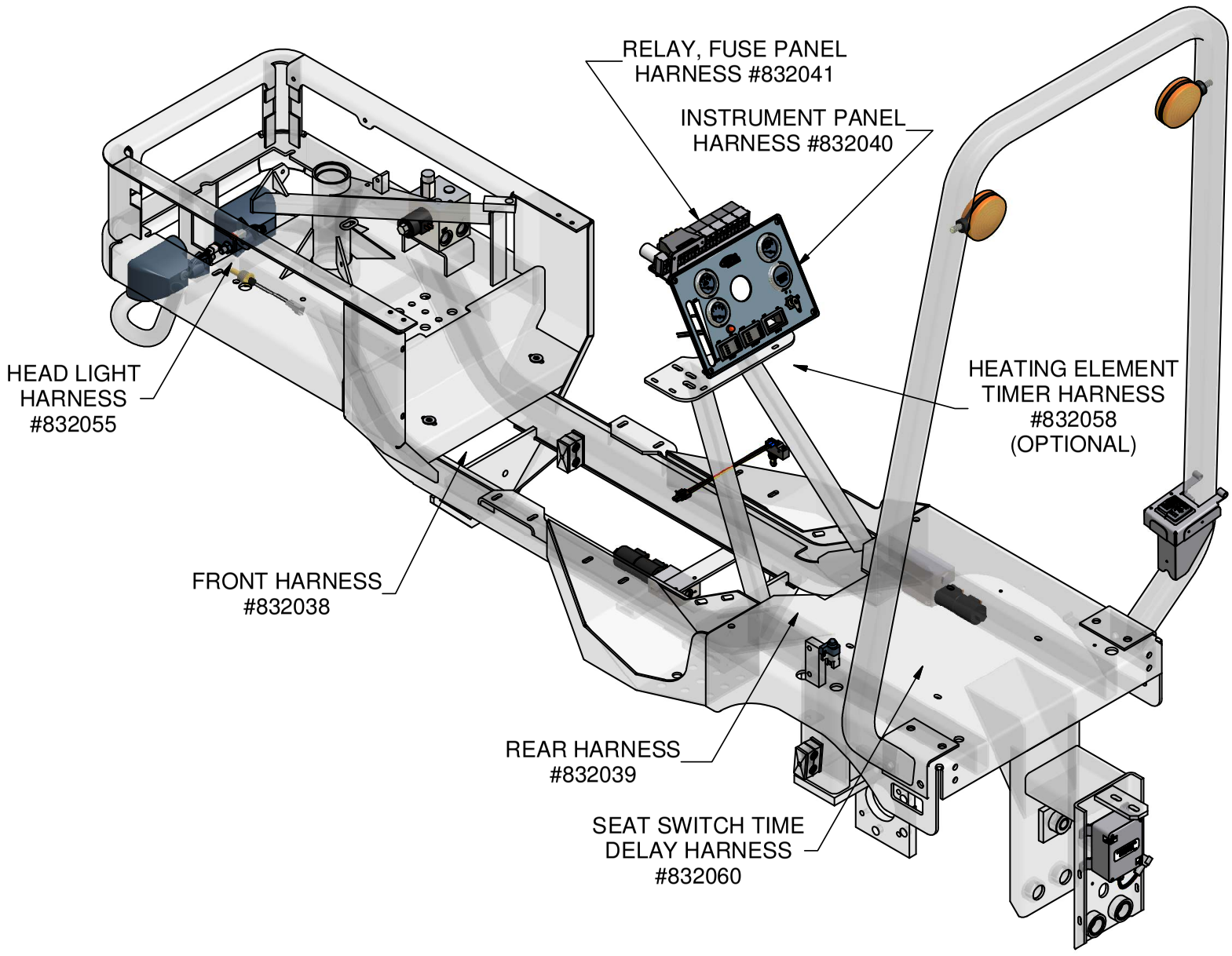

2/9/2006

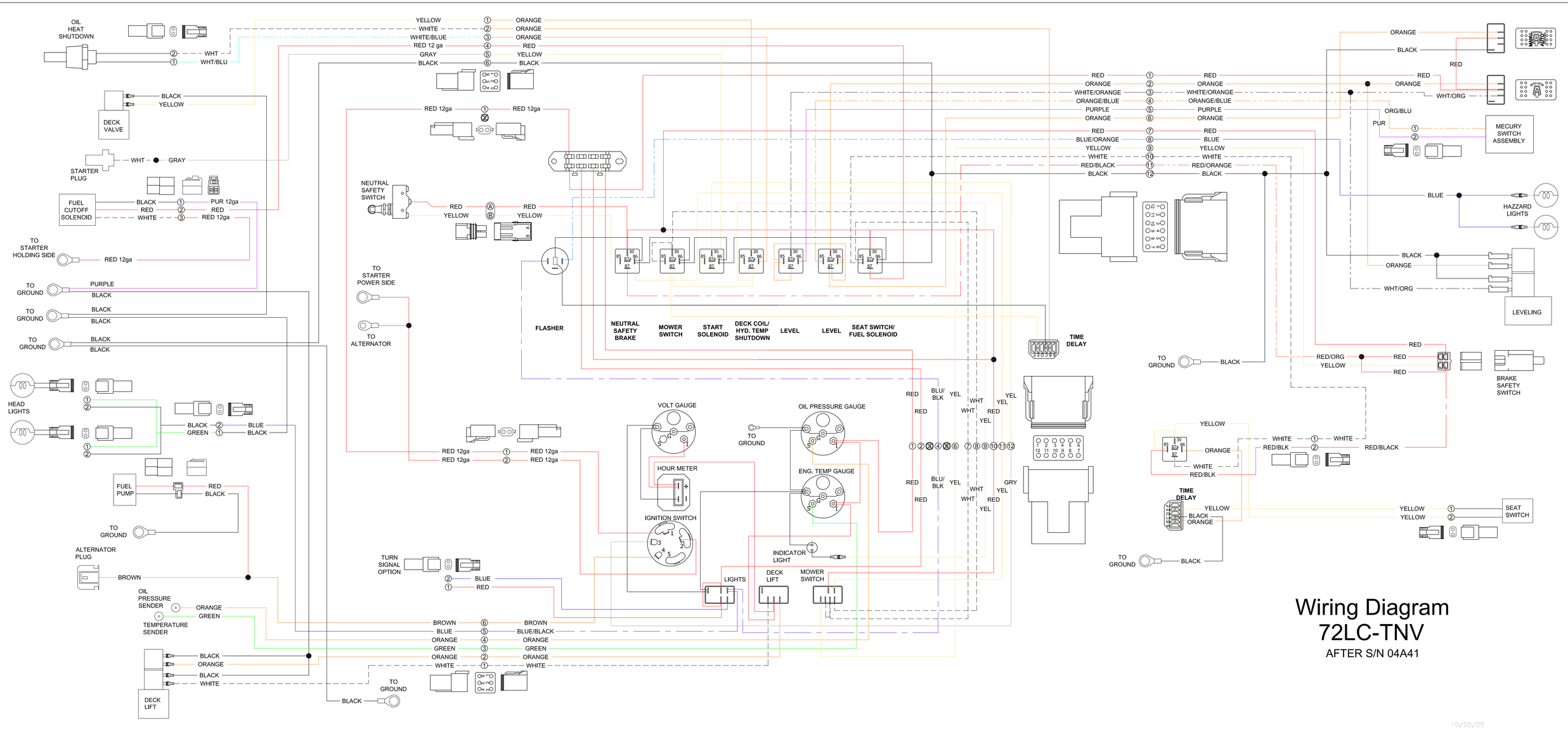

Wiring Diagram
72LC-TNV
AFTER S/N 04A41

10/05/05

832038

1. HARNESS COVERING IS CONVOLUTED CONDUIT UNLESS OTHERWISE SPECIFIED.
2. TAPE CONDUIT AT ENDS AND BREAKOUTS.
3. CONNECTOR DETAILS SHOWN FROM WIRE ENTRY END.
4. WIRE DIMENSIONS ARE TO WIRE END OR BETWEEN *
5. ALL WIRES ARE 14 GAUGE UNLESS OTHERWISE SPECIFIED.

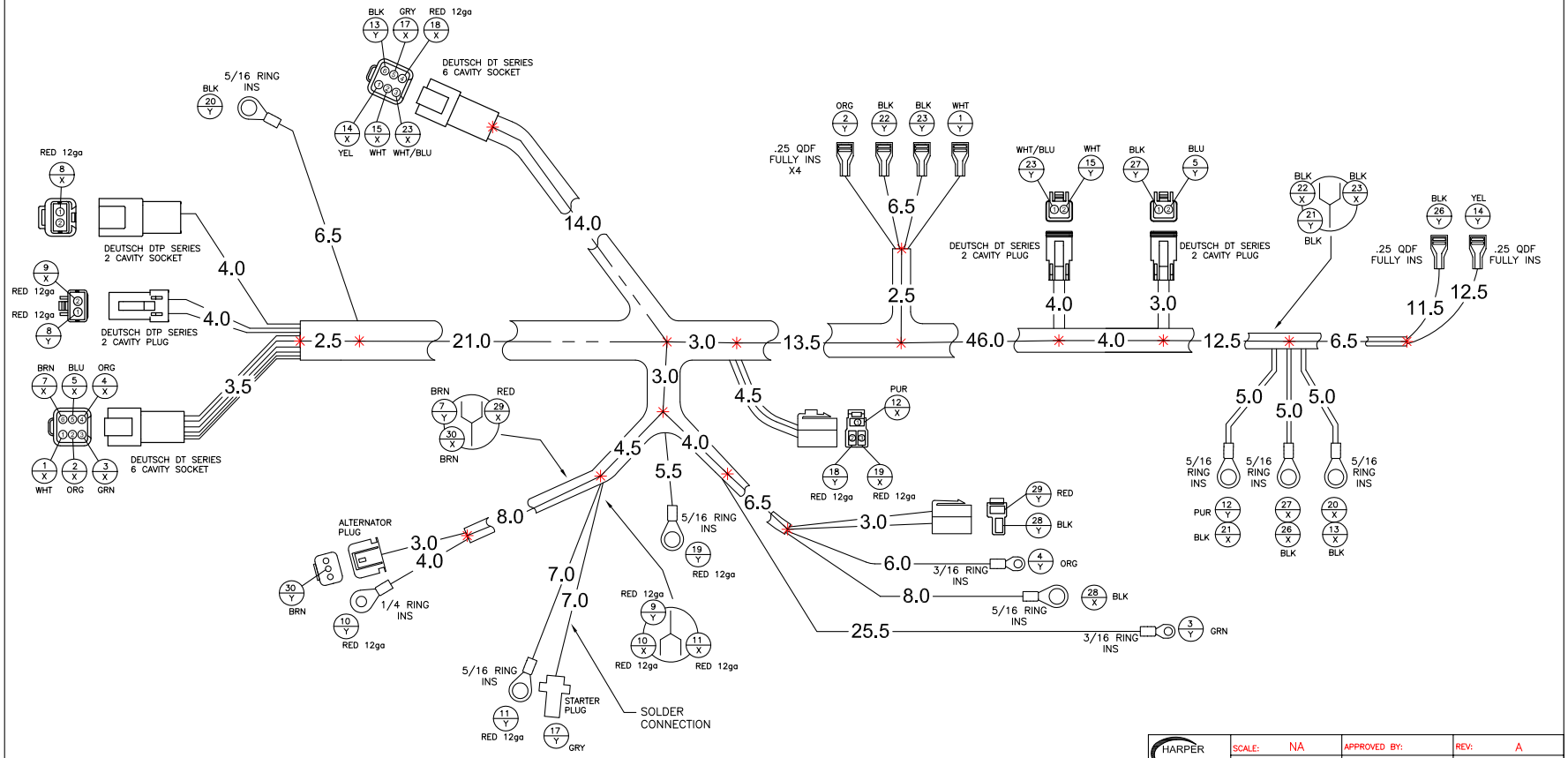

A	RB	09/24/2004	UPDATED AND CORRECTED PRINT	1667
LET.	BY	DATE	DESCRIPTION	REC #

HARPER INDUSTRIES	SCALE: NA	APPROVED BY:	REV: A
	DATE: 03/01/04	DRAWN BY: RP	MODEL: 72LC
DEWEZE / GOOSSEN HARPER, KANSAS	TOLERANCE: .X ±.06 .XX ±.02 .XXX ±.010 .XXXX ±.005		NO. REQD: 1
FRONT HARNESS, TNV			
MATERIAL:		DWG NO	832038

832039

1. HARNESS COVERING IS CONVOLUTED CONDUIT UNLESS OTHERWISE SPECIFIED.
2. TAPE CONDUIT AT ENDS AND BREAKOUTS.
3. CONNECTOR DETAILS SHOWN FROM WIRE ENTRY END.
4. WIRE DIMENSIONS ARE TO WIRE END OR BETWEEN ✳
5. ALL WIRES ARE 14 GAUGE UNLESS OTHERWISE SPECIFIED.

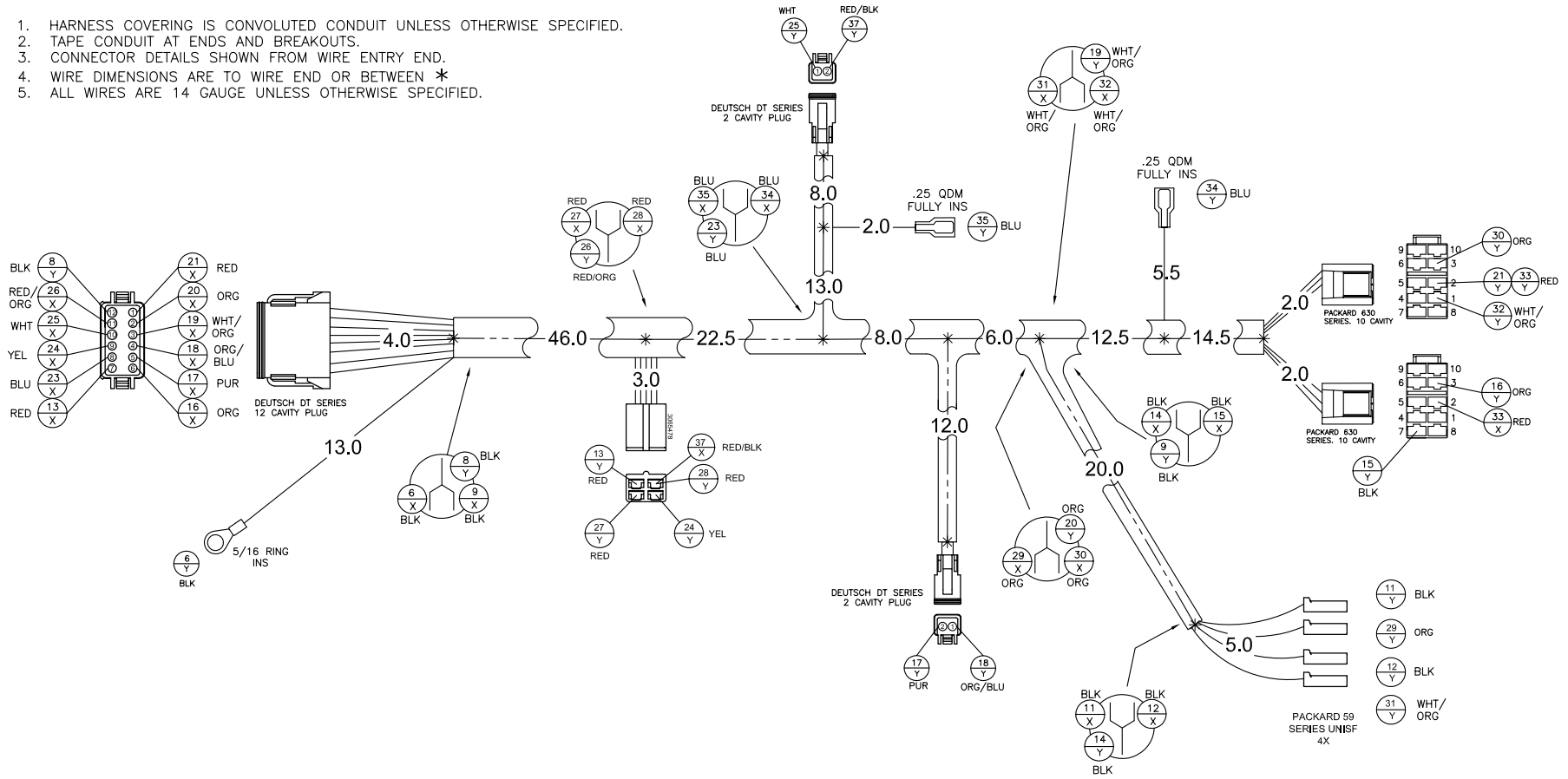

A	RB	09/30/2004	CORRECTED/UPDATED PRINT, SWITCHED 17y & 18y	1667
LET.	BY	DATE	DESCRIPTION	REC #

HARPER INDUSTRIES	SCALE: NA	APPROVED BY:	REV: A
	DATE: 03/22/04	DRAWN BY: RP	MODEL: 72LC
DEWEZE / GOOSSEN HARPER, KANSAS	TOLERANCE: .X ±.06 .XX ±.02 .XXX ±.010 .XXXX ±.005		NO. REQD: 1
REAR HARNESS, TNV			
MATERIAL:		DWG NO	832039

1. CONNECTOR DETAILS SHOWN FROM WIRE ENTRY END.
2. ALL WIRES ARE 14 GAUGE UNLESS OTHERWISE SPECIFIED.
3. WIRE LENGTHS ARE MEASURED BETWEEN CONNECTION POINTS.

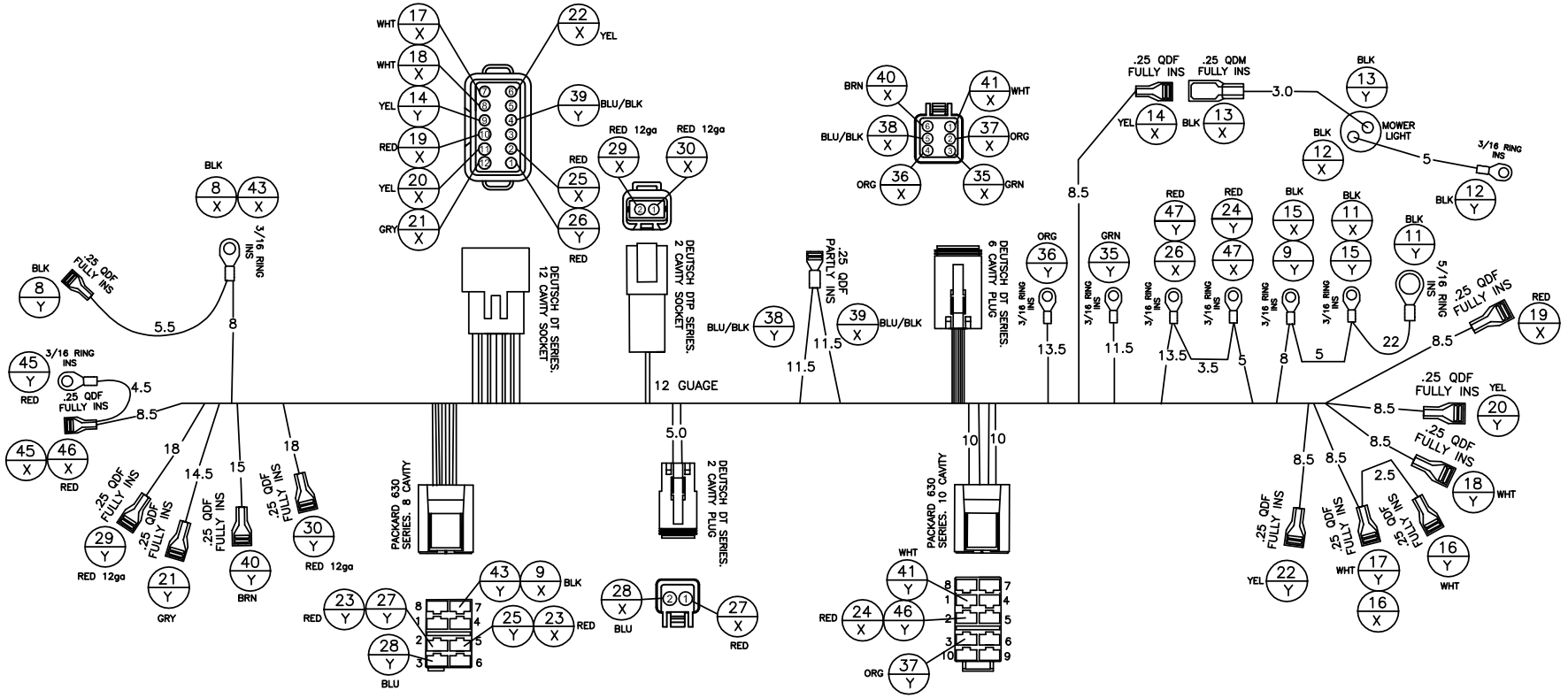

A	RB	10/01/2004	MADE CORRECTIONS ADDED PLUG NUMBERS	1667
LET.	BY	DATE	DESCRIPTION	REC #

HARPER INDUSTRIES	SCALE: NA	APPROVED BY:	REV: A
	DATE: 02/27/04	DRAWN BY: RP	MODEL: 72LC
DEWEZE / GOOSSEN HARPER, KANSAS	TOLERANCE: .X ±.06 .XX ±.02 .XXX ±.010 .XXXX ±.005		NO. REQD: 1
PANEL HARNESS, TNV			
MATERIAL:			DWG NO 832040

832041

1. HARNESS COVERING IS CONVOLUTED CONDUIT UNLESS OTHERWISE SPECIFIED.
2. TAPE CONDUIT AT ENDS AND BREAKOUTS.
3. CONNECTOR DETAILS SHOWN FROM WIRE ENTRY END.
4. WIRE DIMENSIONS ARE TO WIRE END OR BETWEEN ✳
5. ALL WIRES ARE 14 GAUGE UNLESS OTHERWISE SPECIFIED.

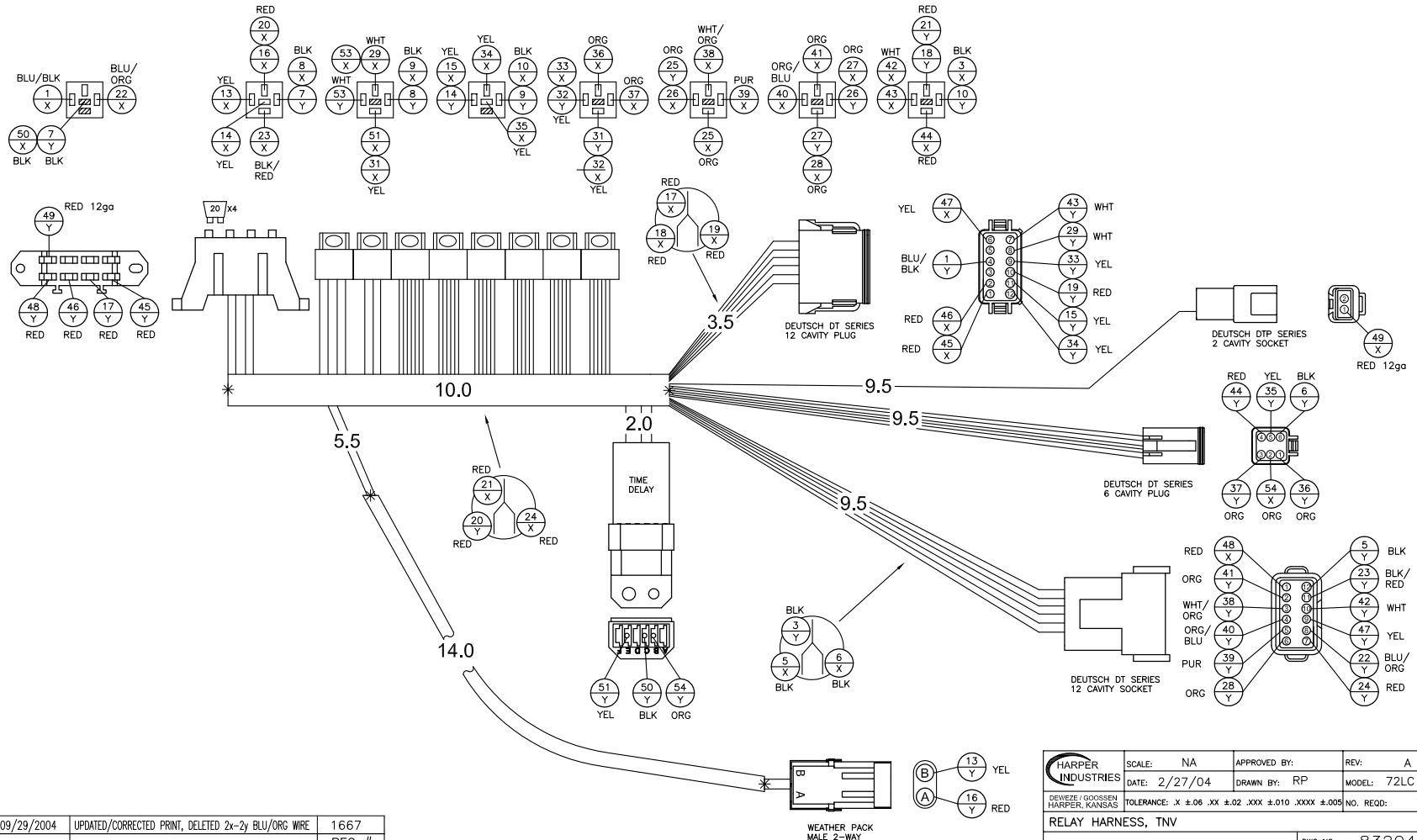

LET.	BY	DATE	DESCRIPTION	REC #
A	RB	09/29/2004	UPDATED/CORRECTED PRINT, DELETED 2x-2y BLU/ORG WIRE	1667

HARPER INDUSTRIES	SCALE: NA	APPROVED BY:	REV: A
	DATE: 2/27/04	DRAWN BY: RP	MODEL: 72LC
DEWEZE / GOOSSEN HARPER, KANSAS	TOLERANCE: .X ±.06 .XX ±.02 .XXX ±.010 .XXXX ±.005		NO. REQD: 1
RELAY HARNESS, TNV			
MATERIAL:			DWG NO 832041

Turn Signal Option

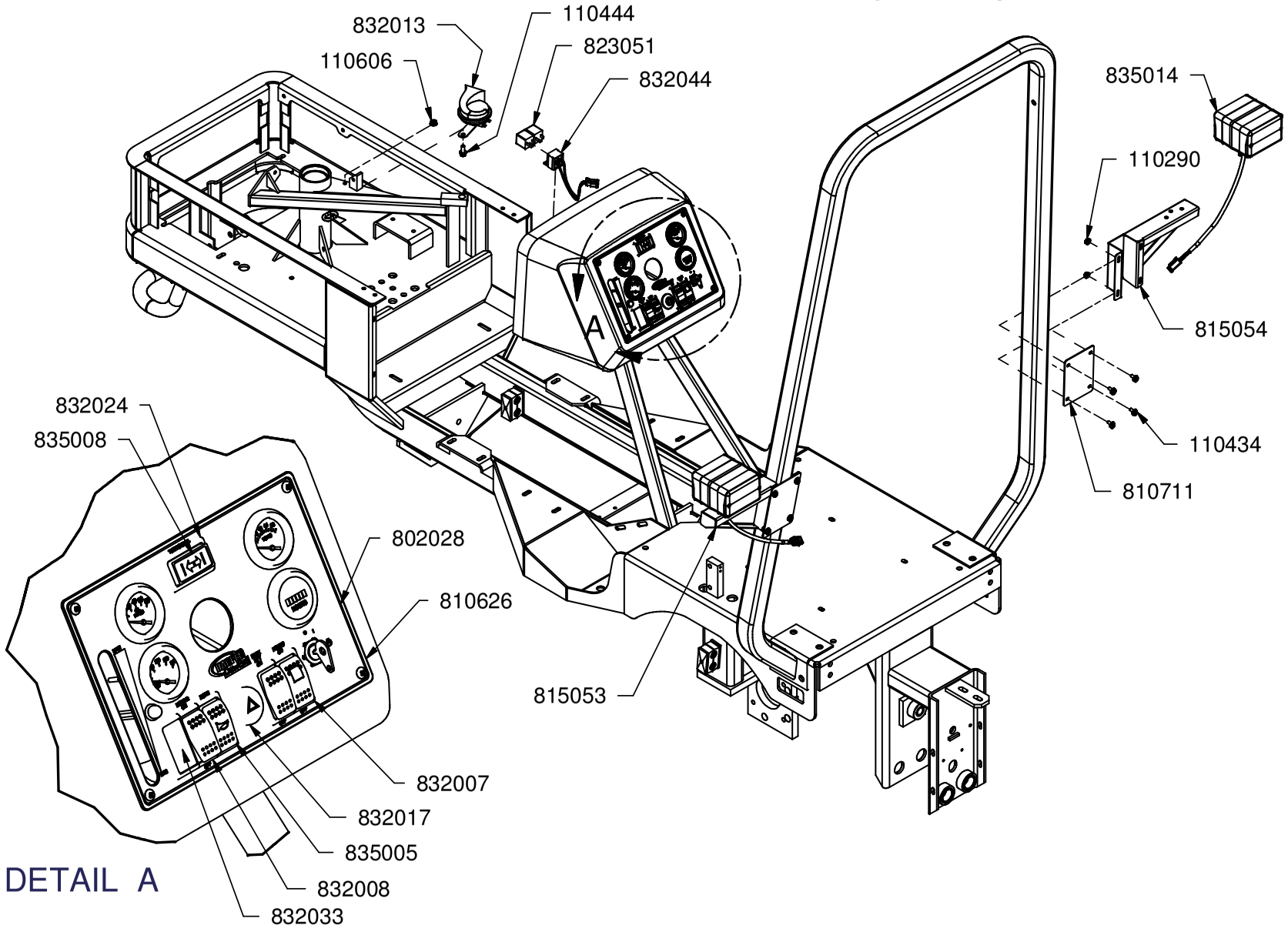

8/23/2004

Turn Signal Option

PART #	QUANTITY	DESCRIPTION
110290	8	NUT, 1/4-20 WIZ FLANGE
110434	8	BOLT, 1/4-20 X 0.5, WIZ FLANGE
110444	1	BOLT, 5/16-18 X 0.75, WIZ FLANGE
110606	1	NUT, 5/16-18 WIZ FLANGE
802028	1	DECAL, INSTR. PANEL (72LC SIGNAL OPT)
810626	1	INSTRUMENT PANEL
810711	2	TURN SIGNAL BRACKET CLAMP
815053	1	TURN SIGNAL BRACKET WELDMENT, LEFT
815054	1	TURN SIGNAL BRACKET WELDMENT, RIGHT
823051	2	FLASHER, 12V RELAY 3 TERMINAL
832007	4	SWITCH MOUNT, END
832008	1	SWITCH MOUNT, MIDDLE
832013	1	HORN
832017	1	SWITCH, HAZARD LIGHT
832024	1	MOUNT, SWITCH (VMS)
832033	1	HOLE PLUG (VHP)
832044	1	HARNESS, FLASHER, 72 LIGHT KIT
835005	1	SWITCH, HORN
835008	1	SWITCH, TURN SIGNAL (DIRECTION LIGHT)
835014	2	TAILLIGHT, COMBINATION FRONT & REAR

NOT SHOWN		
832045	1	DASH HARNESS
832046	1	POWER HARNESS
832053	1	TURN SIGNAL, REAR HARNESS

1. HARNESS COVERING IS CONVOLUTED CONDUIT UNLESS OTHERWISE SPECIFIED.
2. TAPE CONDUIT AT ENDS AND BREAKOUTS.
3. CONNECTOR DETAILS SHOWN FROM WIRE ENTRY END.
4. WIRE DIMENSIONS ARE TO WIRE END
5. ALL WIRES ARE 14 GAUGE UNLESS OTHERWISE SPECIFIED.

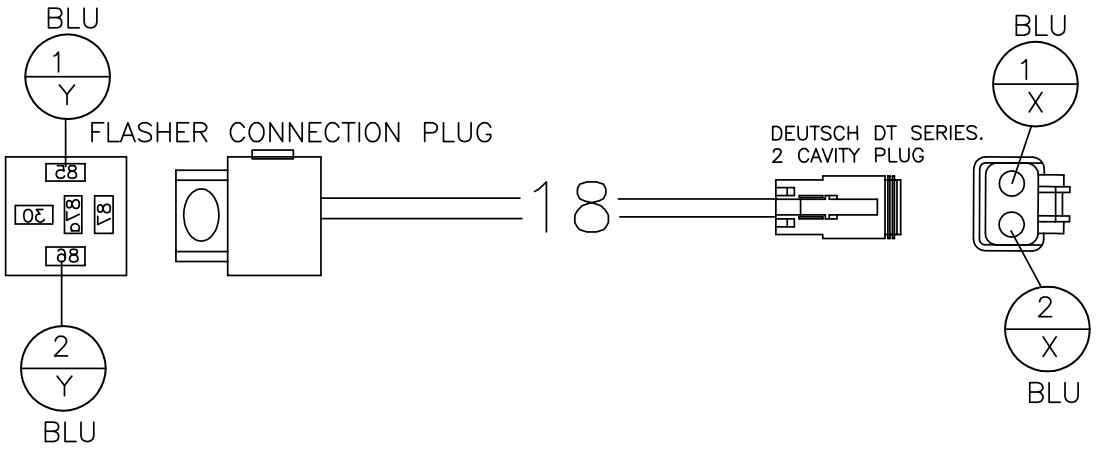

HARPER INDUSTRIES	SCALE: NA	APPROVED BY:	REV: NC
	DATE: 03/03/04	DRAWN BY: RP	MODEL: 72LC
DEWEZE / GOOSSEN HARPER, KANSAS	TOLERANCE: .X ±.06 .XX ±.02 .XXX ±.010 .XXXX ±.005		NO. REQD: 1
HARNESS, FLASHER, 72 LIGHT KIT			
MATERIAL:		DWG NO	832044

1. HARNESS COVERING IS CONVOLUTED CONDUIT UNLESS OTHERWISE SPECIFIED.
2. TAPE CONDUIT AT ENDS AND BREAKOUTS.
3. CONNECTOR DETAILS SHOWN FROM WIRE ENTRY END.
4. WIRE DIMENSIONS ARE TO WIRE END
5. ALL WIRES ARE 14 GAUGE UNLESS OTHERWISE SPECIFIED.

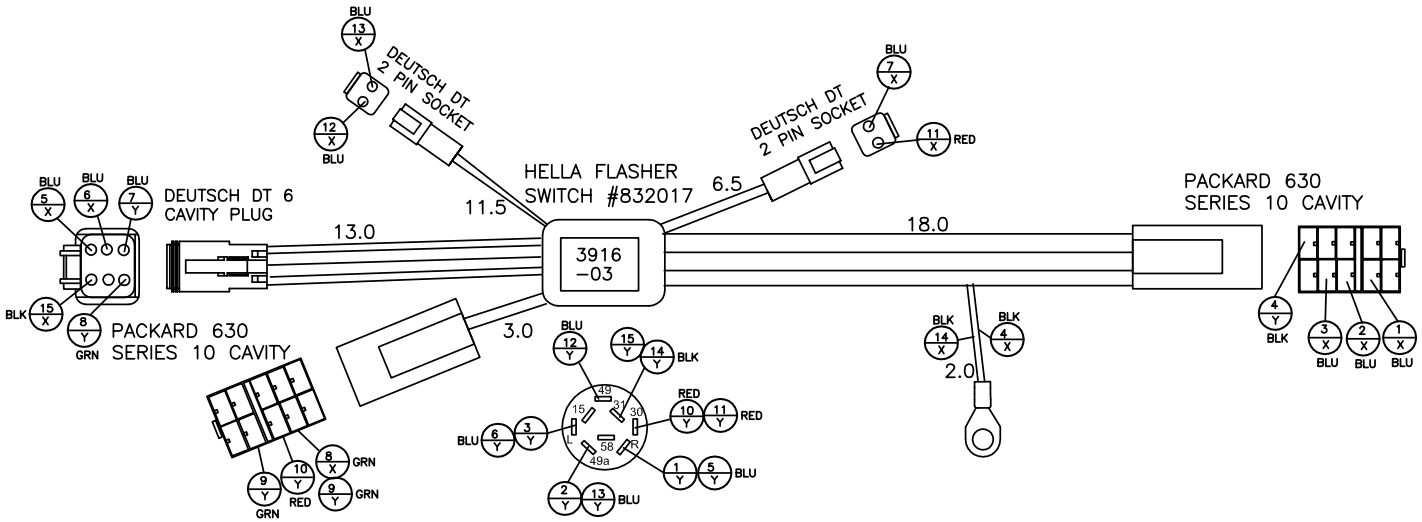

HARPER INDUSTRIES	SCALE: NA	APPROVED BY:	REV: NC
	DATE: 03/04/04	DRAWN BY: RP	MODEL: 72LC
DEWEZE / GOOSSEN HARPER, KANSAS	TOLERANCE: .X ±.06 .XX ±.02 .XXX ±.010 .XXXX ±.005		NO. REQD: 1
HARNESS, DASH 72 LIGHT KIT			
MATERIAL:		DWG NO	832045

1. HARNESS COVERING IS CONVOLUTED CONDUIT UNLESS OTHERWISE SPECIFIED.
2. TAPE CONDUIT AT ENDS AND BREAKOUTS.
3. CONNECTOR DETAILS SHOWN FROM WIRE ENTRY END.
4. WIRE DIMENSIONS ARE TO WIRE END
5. ALL WIRES ARE 14 GAUGE UNLESS OTHERWISE SPECIFIED.

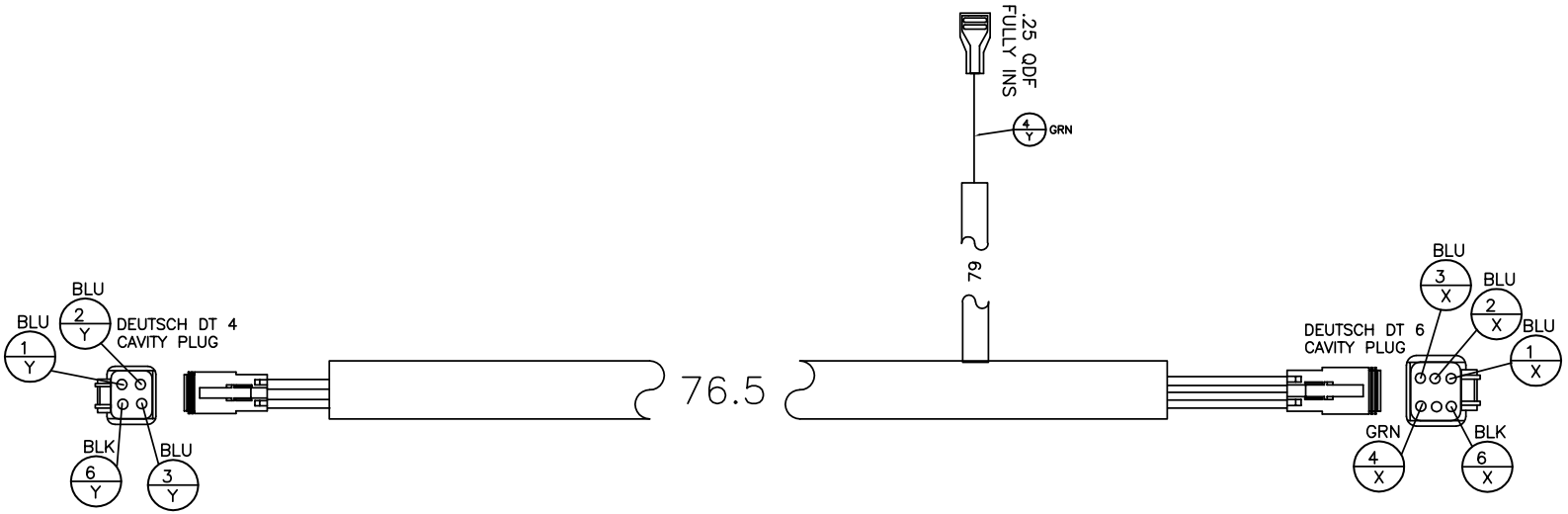

HARPER INDUSTRIES	SCALE: NA	APPROVED BY:	REV: NC
	DATE: 03/03/04	DRAWN BY: RP	MODEL: 72LC
DEWEZE / GOOSSEN HARPER, KANSAS	TOLERANCE: .X ±.06 .XX ±.02 .XXX ±.010 .XXXX ±.005		NO. REQD: 1
HARNESS, POWER, 72 LIGHT KIT			
MATERIAL:		DWG NO	832046

1. HARNESS COVERING IS CONVOLUTED CONDUIT UNLESS OTHERWISE SPECIFIED.
2. TAPE CONDUIT AT ENDS AND BREAKOUTS.
3. CONNECTOR DETAILS SHOWN FROM WIRE ENTRY END.
4. WIRE DIMENSIONS ARE TO WIRE END
5. ALL WIRES ARE 14 GAUGE UNLESS OTHERWISE SPECIFIED.

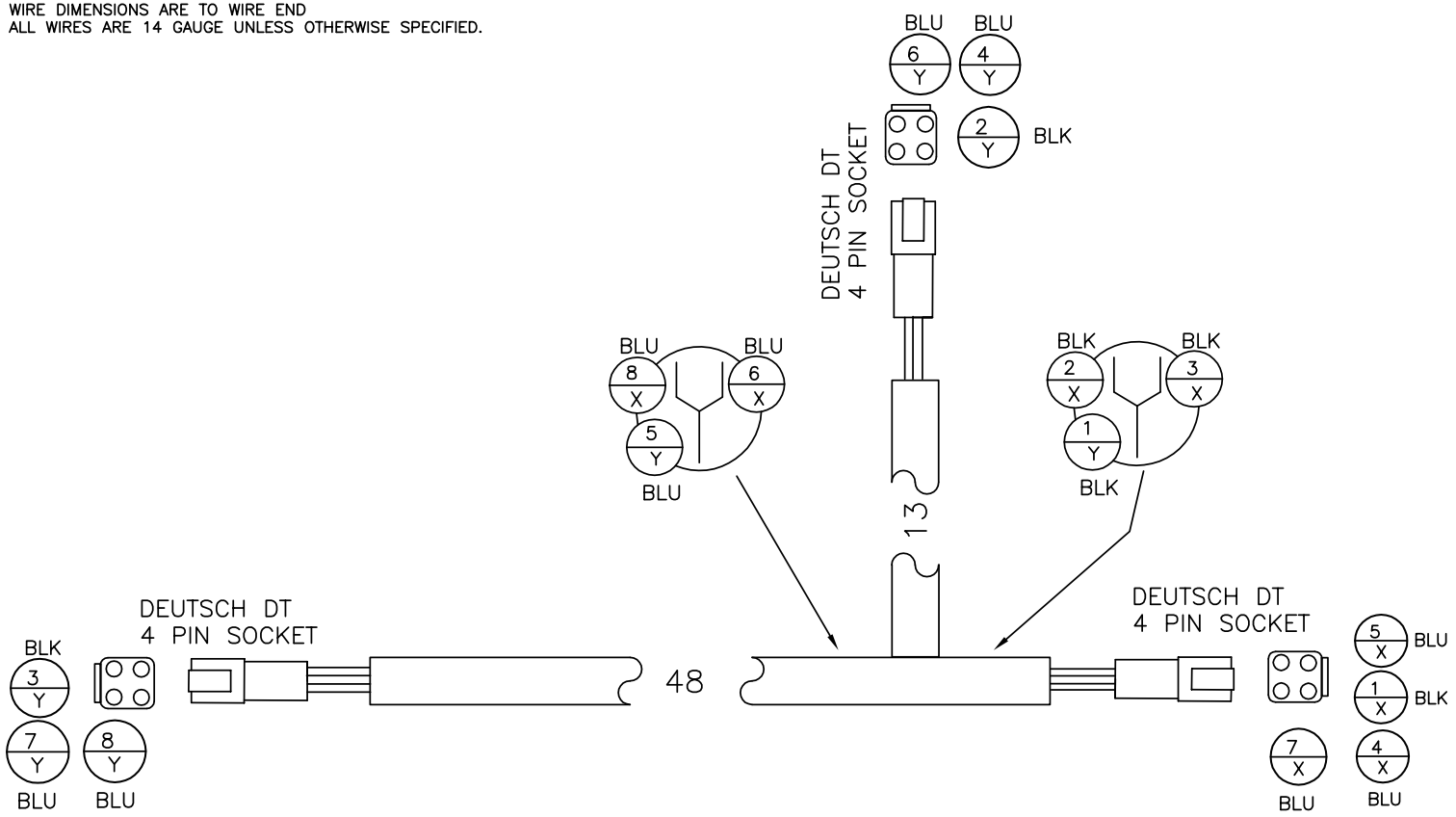

HARPER INDUSTRIES	SCALE: NA	APPROVED BY:	REV: NC
	DATE: 03/29/04	DRAWN BY: RP	MODEL: 72LC
DEWEZE / GOOSSEN HARPER, KANSAS	TOLERANCE: .X ±.06 .XX ±.02 .XXX ±.010 .XXXX ±.005		NO. REQD: 1
TURN SIGNAL, REAR HARNESS			
MATERIAL:		DWG NO	832053

Engine and Cooling

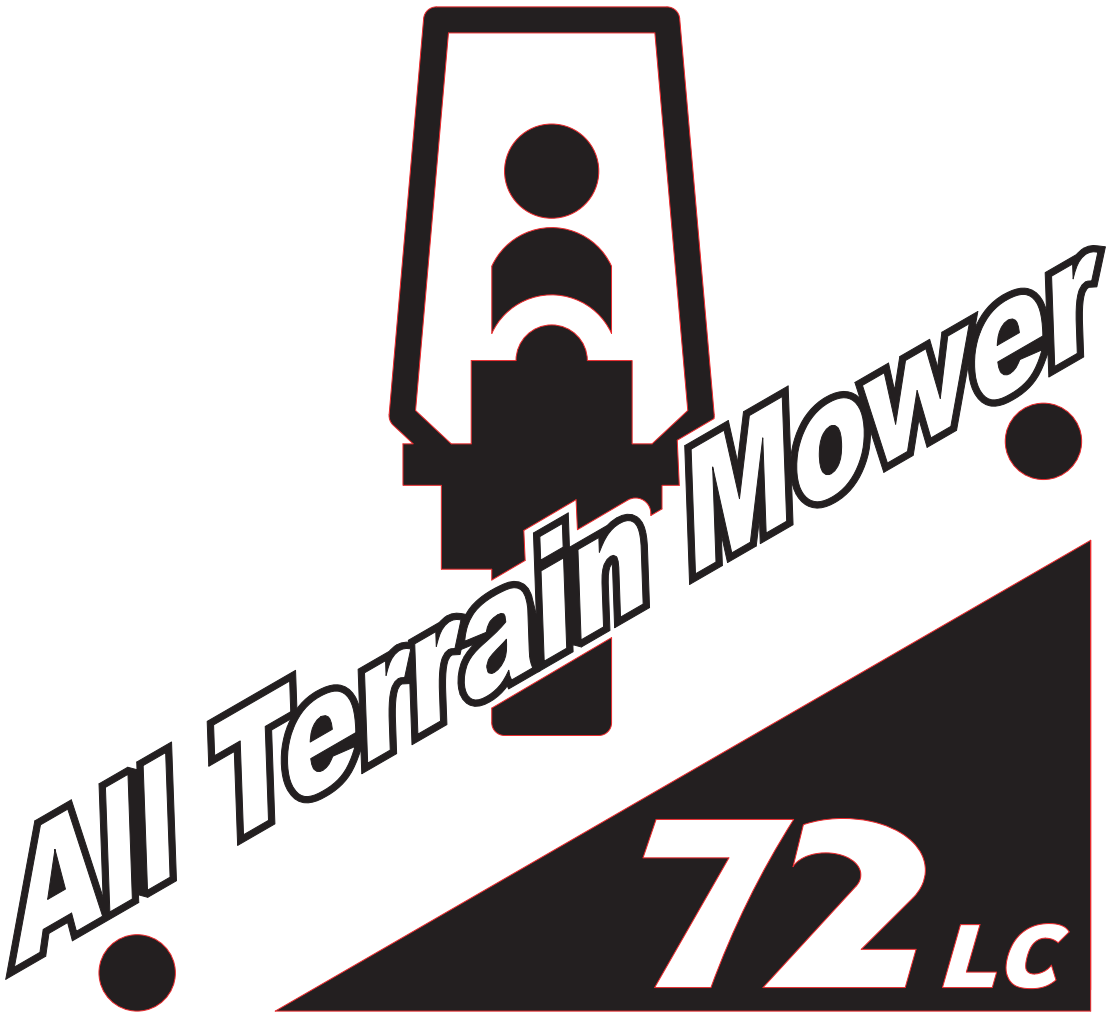

Throttle

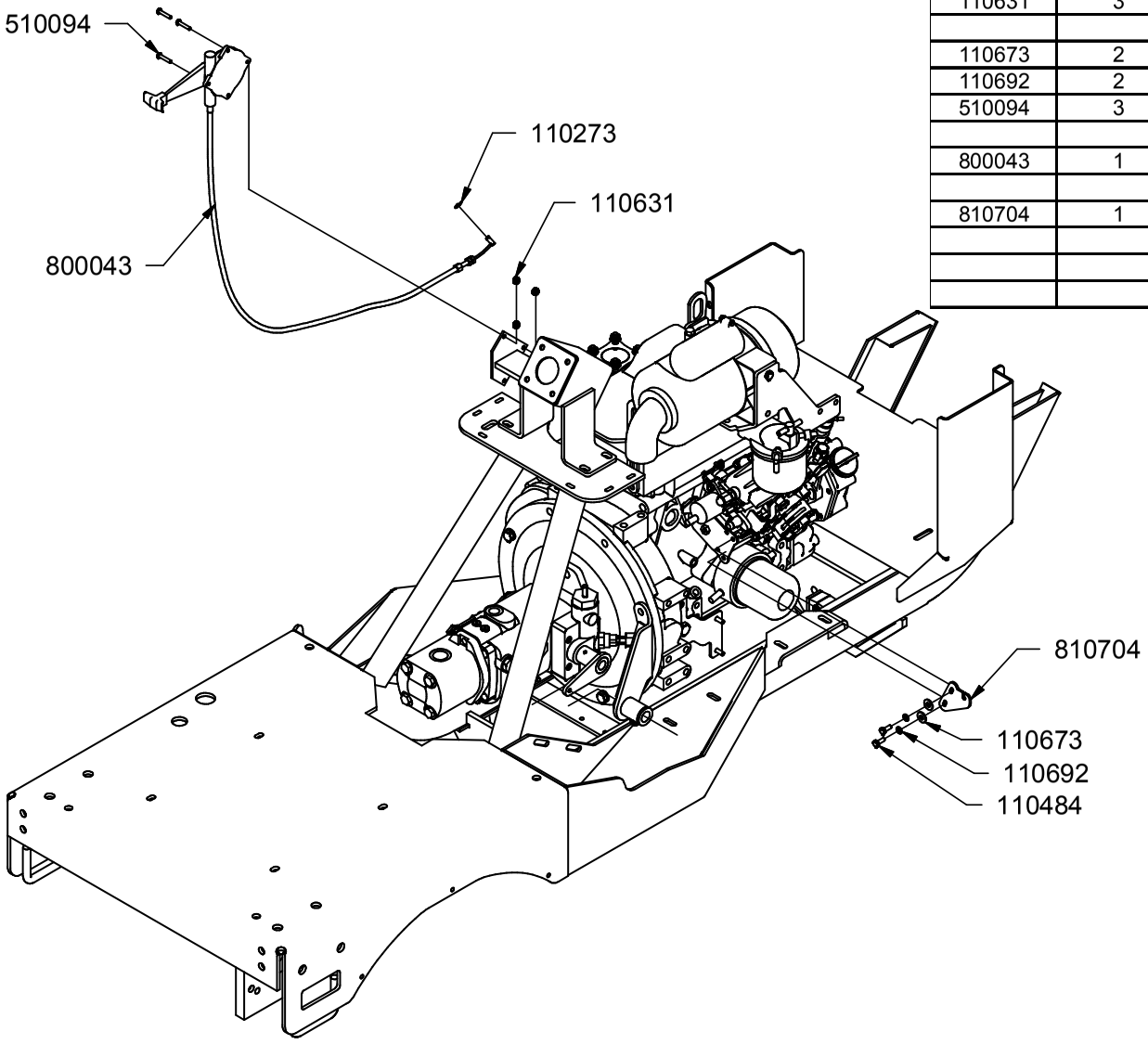

PART #	QUANTITY	DESCRIPTION
110273	1	CLIP, E-Ring E-25
110484	2	BOLT, M6x1 x 16 Gr 10.9
110620	2	NUT, 1/4-28
110631	3	NUT, 10-24 LOCK NYLON INSERT
110673	2	WASHER, 1/4" FLAT STANDARD
110692	2	WASHER, 6 mm LOCK
510094	3	SCREW, 10-24 X 1, RHMS
800043	1	THROTTLE CABLE
810704	1	THROTTLE CABLE BRACKET

5/13/2004

Engine Assembly

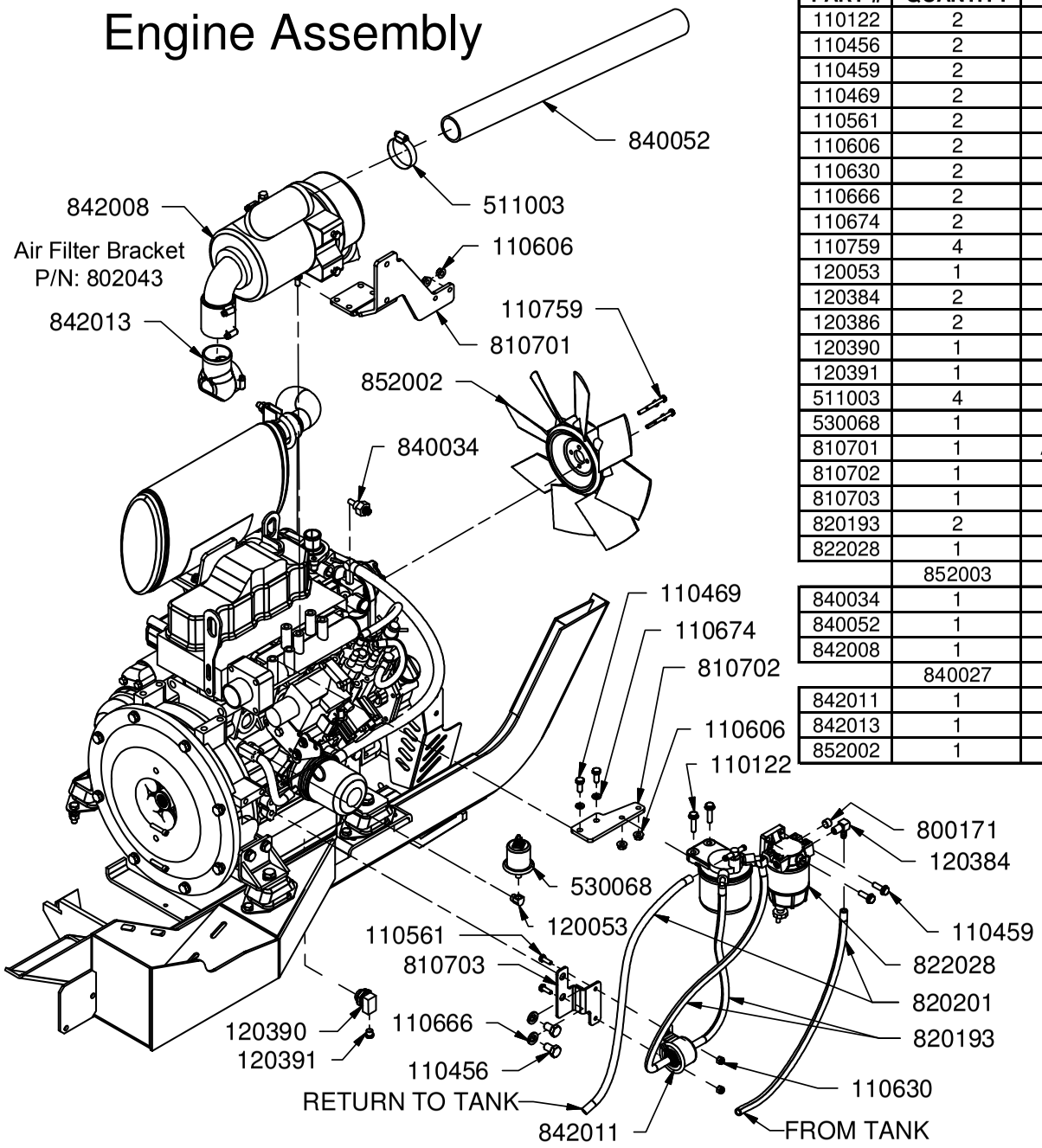

PART #	QUANTITY	DESCRIPTION
110122	2	BOLT, 5/16-18 X 1.25, WIZ FLANGE
110456	2	BOLT, M12x1.75 x 20 Gr 10.9
110459	2	BOLT, 5/16-18 X 1, WIZ FLANGE
110469	2	BOLT, M8x1.25 x 20 Gr 10.9
110561	2	BOLT, 1/4-20 X .75
110606	2	NUT, 5/16-18 WIZ FLANGE
110630	2	NUT, 1/4-20 LOCK (NYLON INSERT)
110666	2	WASHER, 1/2" LOCK
110674	2	WASHER, 5/16" LOCK
110759	4	BOLT, M6x1 x 40 Gr 10.9
120053	1	ADAPTER, BRAKE LINE 90
120384	2	ADAPTER, 5BH-4MP90
120386	2	PLUG, 1/4 PIPE, HEX SOCKET
120390	1	ADAPTER, M22 (1.5)-4FB 90
120391	1	PLUG, 4MB, INT SH
511003	4	CLAMP, HOSE #36 2.25"
530068	1	OIL PRESSURE SENDER
810701	1	AIR CLEANER BRACKET W/ SEPERATOR MOUNT
810702	1	FUEL FILTER BRACKET
810703	1	FUEL PUMP BRACKET
820193	2	FUEL HOSE
822028	1	FILTER, FUEL/WATER SEPERATOR
	852003	FILTER, SPIN ON FUEL/WATER SEPERATOR
840034	1	COOLANT TEMP SENDER
840052	1	AIR INTAKE TUBE
842008	1	AIR FILTER ASSY, DONALDSON
	840027	AIR FILTER ELEMENT
842011	1	FUEL PUMP, ELECTRIC TNV
842013	1	ELBOW, CLOSE RADIUS
852002	1	FAN, TNV ENGINE

12/18/2006

PART #	QUANTITY	DESCRIPTION
110071	2	1/4-20 U-TYPE TAPPED HOLE
110141	4	NUT, M8 X 1.25 WIZ FLANGE
110282	4	BOLT, M10x1.5 x 20 Gr 10.9
110425	8	BOLT, 3/8-16 X 1.25
110426	2	BOLT, 5/16-18 X 0.5, WIZ FLANGE
110456	4	BOLT, M12x1.75 x 20 Gr 10.9
110468	2	BOLT, 1/4-20 X 0.75, WIZ FLANGE
110577	4	BOLT, M12x1.75 x 45 Gr 10.9
110612	8	NUT, 3/8-16 GR 2
110616	2	NUT, 5/16", J-TYPE, CAGE, .5C
110666	4	WASHER, 1/2" LOCK

PART #	QUANTITY	DESCRIPTION
110671	4	WASHER, 7/16" LOCK
110672	8	WASHER, 3/8" LOCK
110676	8	WASHER, 3/8" FLAT STANDARD
110757	1	CLAMP, 1 3/4" EXHAUST
110779	1	CLAMP, 1 1/2" EXHAUST
800021	4	MOTOR MOUNT
810448	2	FRONT MOTOR MOUNT WELDMENT
810700	1	HEAT SHIELD
810720	1	EXHAUST BRACE
815015	2	REAR MOTOR MOUNT WELDMENT
840047	1	EXHAUST MANIFOLD GASKET
840051	1	EXHAUST TUBE, UNDER THE HOOD MUFFLER
842009	1	MUFFLER, UNDER THE HOOD

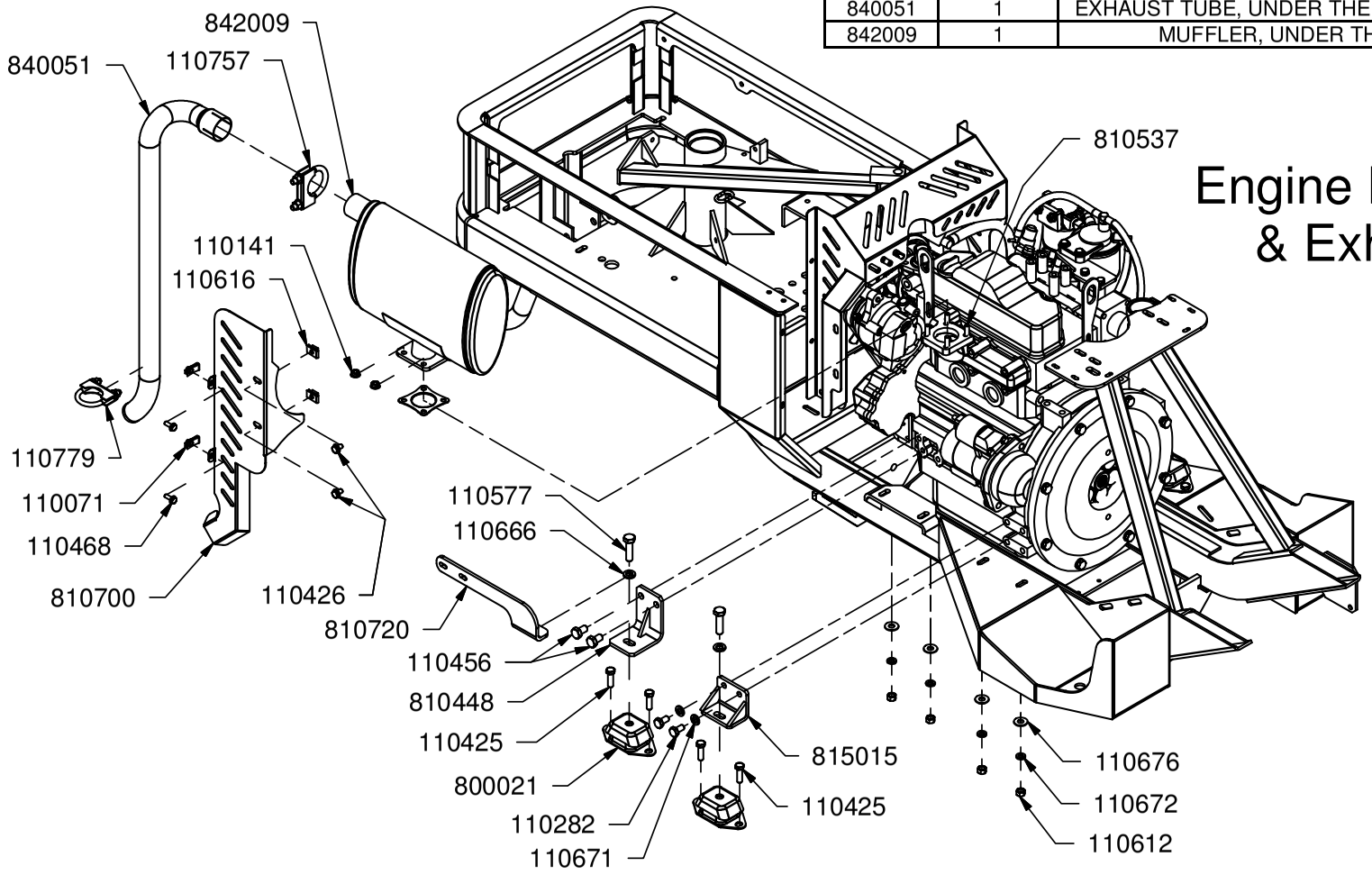

Engine Mounts & Exhaust

12/22/2006

Radiator Assembly

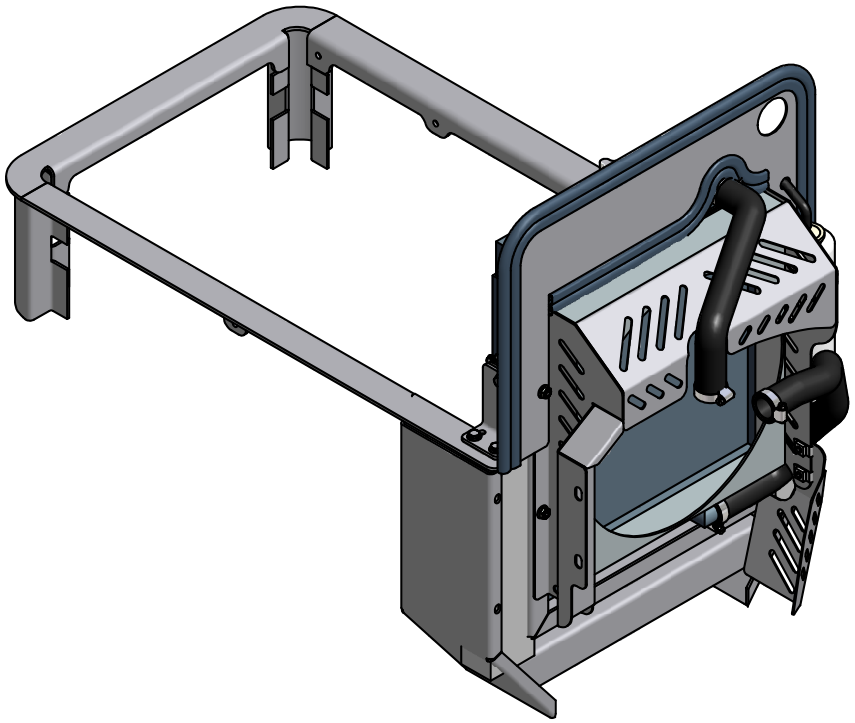

PART #	QUANTITY	DESCRIPTION
110230	4	NUT, M8 X 1.25, LOCK NYLON
110258	1	NUT, 5/16-18, CAGE TINNERMAN
110426	4	BOLT, 5/16-18 X 0.5, WIZ FLANGE
110444	11	BOLT, 5/16-18 X 0.75, WIZ FLANGE
110606	6	NUT, 5/16-18 WIZ FLANGE
110616	4	NUT, 5/16", J-TYPE, CAGE, .5C
110676	2	WASHER, 3/8" FLAT STANDARD
110676	4	WASHER, 3/8" FLAT STANDARD
511002	4	CLAMP, HOSE #24 1.50"
800183	1	5/16 ID HOSE
802002	1	RADIATOR
810546	1	RADIATOR MOUNT
810587	2	RADIATOR MOUNT BRACKET
810632	1	FAN SHIELD LOWER RIGHT
810655	1	BAFFLE SEAL, UPPER
810656	1	BAFFLE SEAL, LOWER
810657	2	FOAM SEAL
810679	1	HOOD BAFFLE
815016	1	FAN SHIELD WELDMENT
840035	2	ANTI-VIBRATION MOUNT
840040	1	RADIATOR HOSE, TOP
840041	1	RADIATOR HOSE, BOTTOM
840042	1	SUBTANK, RESERVOIR
840043	1	SUBTANK BRACKET
840044	1	CLAMP, SUBTANK
840045	1	RADIATOR CAP

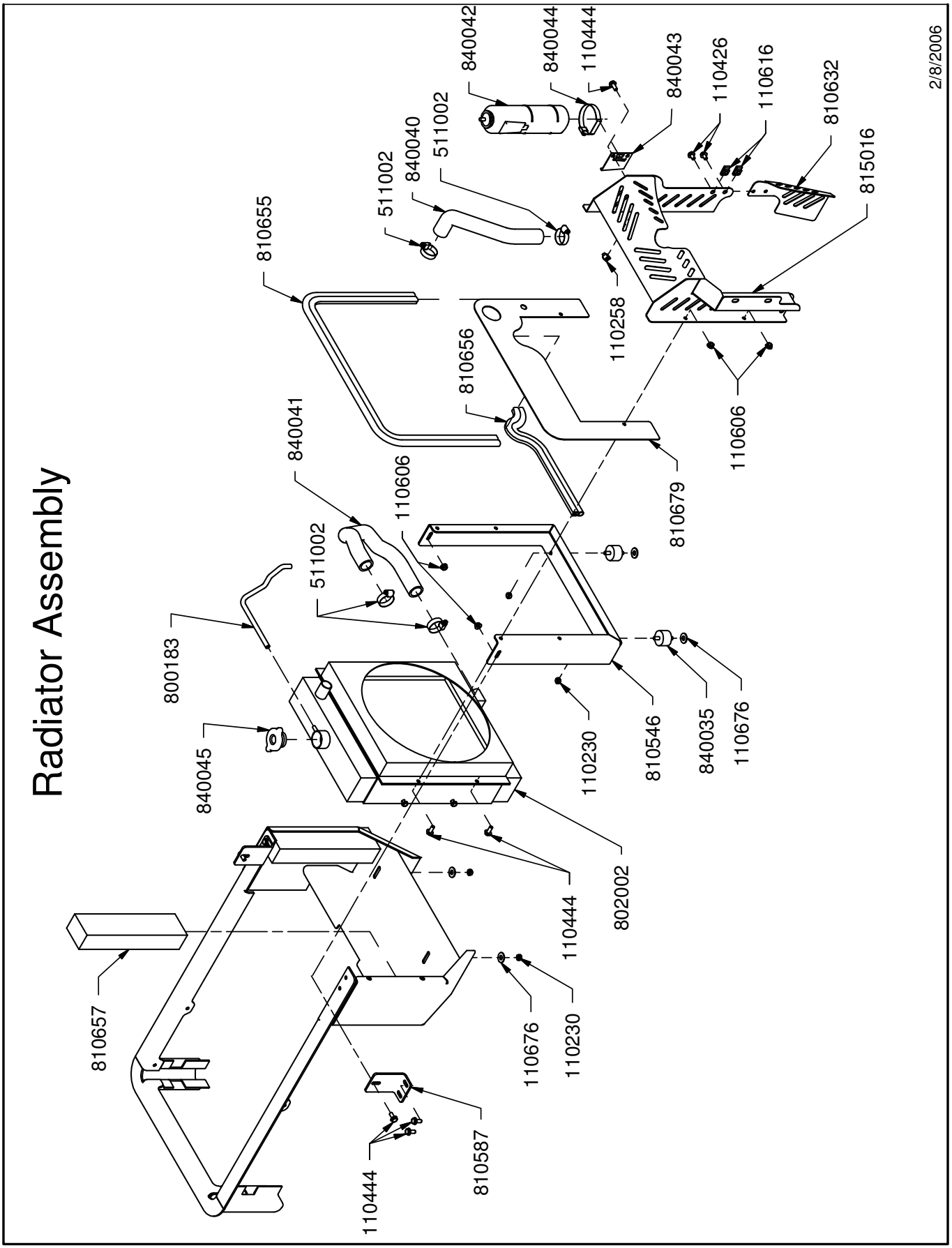
Radiator Assembly
2/8/2006
840042
840044
110444
840043
110426
110616
810632
815016
511002
840040
511002
810655
810656
110258
110606
840041
110606
810679
511002
800183
840045
110230
810546
840035
110676
802002
110444
810657
110676
110230
810587
110444