800/900 RT & XRT

Serial Number: 26A01+
Manual PN: 201003

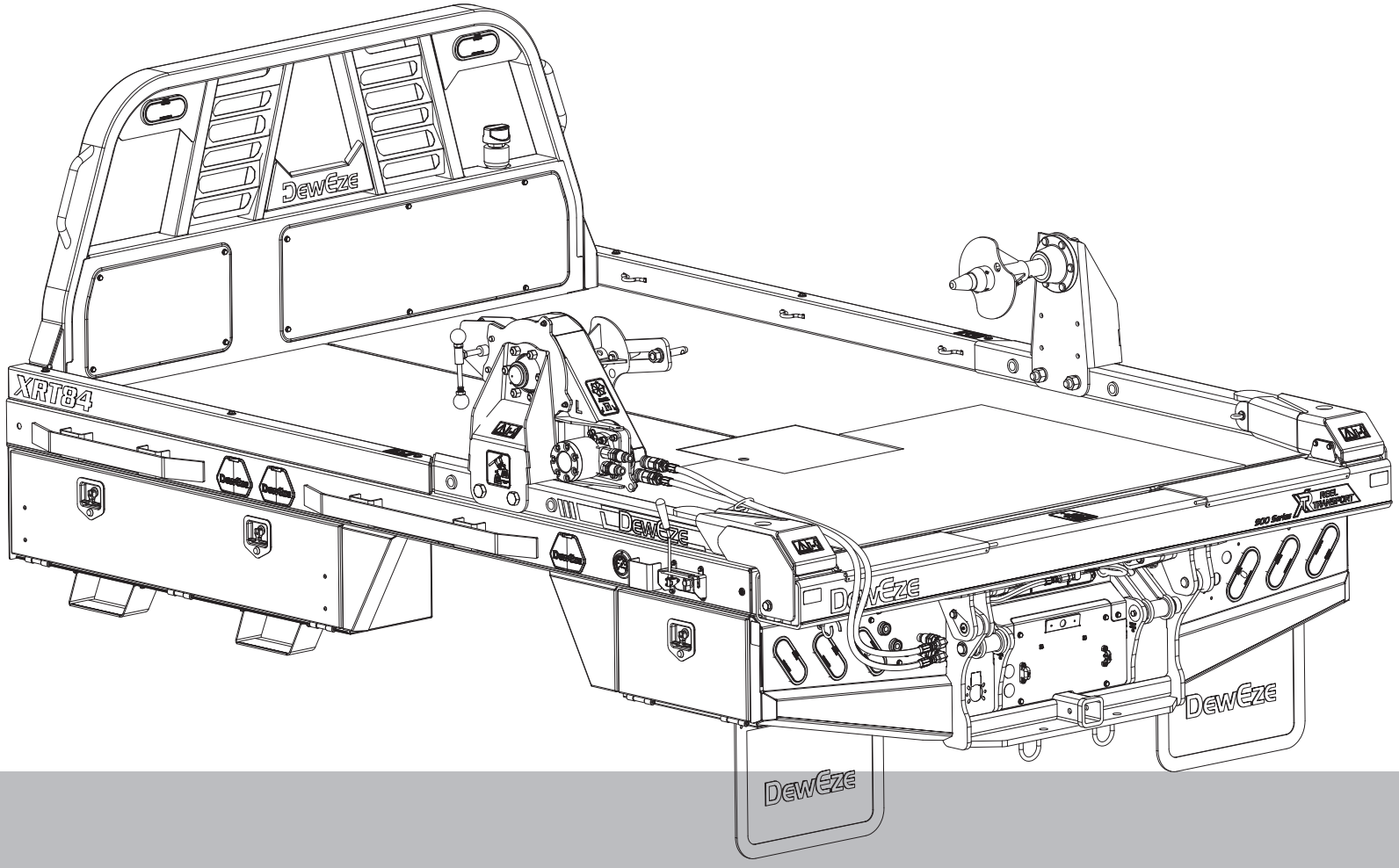

DewEze®

11-2026

HARPER INDUSTRIES INC

Thank you for purchasing a DewEze Reel Transport.

TO THE OWNER OR OPERATOR:

As with all Harper products, the 800 and 900 Series RT & XRT Reel Transports have been thoroughly tested and built to provide a sturdy, dependable product. They are equipped with live hydraulics, which allows them to be used for a wide range of lifting and hauling tasks. This manual is written as an aid to operating and maintaining the Reel Transport. Read and understand the manual thoroughly before operation to avoid damage to the unit or injury to the operator or bystanders.

A Reel Transport can present hazards to an operator who follows unsafe procedures in either the operation or maintenance of the unit. Therefore, **SAFETY WARNINGS** are present at certain locations in the text. Harper Industries is not responsible for accidents or injuries that result from the misuse or lack of maintenance of the Reel Transport.

SYMBOL:  **SAFETY WARNING!** 

MEANING: Failure to understand and obey this warning may result in injury to you or others. Whenever this symbol is used, please pay very close attention to the information presented, and make sure you fully understand. If you do not, contact your dealer or Harper Industries for clarification.

HARPER INDUSTRIES, INC.
151 E. HWY. 160 Harper, KS 67058
(620) 896-7381 • **Fax** (620) 896-7129
Toll Free 800-835-1042
Email info@deweze.com
Website www.deweze.com

© 2026 Harper Industries, Inc.
The Harper and DewEze names and the logo are registered trademarks of Harper Industries, Inc. All other brand and product names are trademarks or registered trademarks of their respective companies.

LIMITED WARRANTY

Harper Industries, Inc. (HII) warrants to each purchaser of a new DewEze Reel Transport from an authorized dealer or representative, that such equipment is free of manufacturer's defects in workmanship and materials which appear while in normal service for a period of TWO YEARS commencing with delivery to the original user. The Reel Transport hydraulic and electrical systems are warranted for a period of ONE YEAR.

The obligation of HII under this warranty is expressly limited, at our option, to replacement or repair at a service facility designated by Harper Industries or at the manufacturing plant in Harper, KS. A part will be replaced after inspection discloses it to have been defective. This warranty does not apply to defects caused by damage or unreasonable use (including failure to provide reasonable and necessary maintenance, or by performing functions without genuine DewEze Reel Transport accessories) while in the possession of the consumer.

Warranty is limited to parts, labor and ground freight delivery of replacement parts. Labor for repair to hydraulic and electrical power systems from HII installed with bed purchase/ installation is covered under this warranty. HII shall not be liable for the consequential damages of any kind, including but not limited to consequential labor costs or transportation charges in connection with replacement or repair of defective parts.

This warranty does not apply to parts subjected to misuse, abuse, alteration, improper or inadequate maintenance, or normal wear.

Harper Industries makes no warranty with respect to trade accessories. They are subject to the warranties of their respective manufacturers.

ANY IMPLIED OR STATUTORY WARRANTIES, INCLUDING ANY WARRANTY OR MERCHANTABILITY OR FITNESS FOR A PARTICULAR PURPOSE, ARE EXPRESSLY LIMITED TO THE DURATION OF THIS WRITTEN WARRANTY. HII makes no other express warranty, nor is anyone authorized to make any on behalf of HII.

For further information please contact your nearest DewEze Reel Transport dealer.

RECORDS

Date of Purchase _____ / _____ / _____

Dealer's Name _____

Dealer's Phone _____

Serial Number Machine _____

Serial Number Engine _____

Table of Contents

OPERATOR SECTION

To the Owner or Operator..... 1
Warranty Statement..... 2
Table of Contents..... 3
Specifications
- Bed Model Chart..... 4
- Toolboxes, Skirts..... 4
- Hydraulic System Specs..... 5

Feature Identification..... 6-8
Safety Guidelines
- General Equipment Safety..... 8
- Flatbed Operation Safety..... 8
- Safety Decal Identification..... 8
- Hydraulic Safety..... 9
- Intitial Startup Procedure..... 9

Operating Instructions
- Remote Control Transmitter..... 9-10
- Beginning Operation..... 10
- Loading..... 10
- Unloading..... 10
- Pay-out..... 10
- Reel Diameters & Lift Capacity..... 11
- RT Reel Width & Spindle Configurations..... 12
- XRT Reel Width & Spindle Configurations..... 13

Reel Power Attachment
- Hydraulic Winder..... 14-15
- Storing Arms..... 15
- System Off..... 15
- E/H System Specs & Limits..... 15

Maintenance
- Quick Checks..... 16
- Lubrication..... 16

Troubleshooting
- Reference Table..... 17

Appendix I
- GatorHyde Repair..... 18

Appendix II
- Remote Transmitter/Receiver Synching..... 19-20

Appendix III
- E/H Installation..... 21-22

PARTS SECTION
- RT Dummy Arms..... 25
- XRT Dummy Arms..... 26

Crosstubes & Arms
- 800 or 900 RT Crosstube, Arms w/Decals..... 27-28
- XRT Crosstube & Arms w/Decals..... 29

Cylinders
- RT Squeeze & Lift Cylinders w/Linkage..... 30-31
- XRT Squeeze & Lift Cylinders w/Linkage..... 32-33

Hydraulics
- 800 & 900 RT Hydraulic Schematic..... 34
- RT Hose Routing: Lift & Squeeze..... 35
- RT Hose Routing: 3rd Bank (General)..... 36
- RT Hose Routing: 3rd Bank w/Winder..... 37
- 900 Series XRT Hydraulic Schematic..... 38
- XRT Hose Routing: Lift & Squeeze..... 39
- XRT Hose Routing: 3rd Bank w/Winder..... 40
- RT & XRT Hydraulic Valve & 3rd Bank..... 41
- RT & XRT Non-proportional 2 Bank Valve Kit.. 42
- RT & XRT 3rd Bank Valve Kit..... 43
- Hydraulic Reservoir & Filter..... 44-45
- Valve Switches Kit..... 46

Electrical Components
- Electrical Harness Infographic..... 47
- Electrical Harnesses..... 47-48
- Wireless Control..... 49
- OEM to DewEze Harness Adapters..... 50-51

E/H HD and Hybrid
- Kits and Components..... 52
- Hybrid Instructions..... 53

Common Parts and Options
- Lights..... 54-55
- Headache Rack Covers & Components..... 56
- Ball Well & Receiver Hitch Pin..... 57
- Rear Panel Assembly..... 58

RT & XRT Parts and Options
- RT & XRT Above Bed Toolboxes..... 58
- RT & XRT Below Bed Toolboxes..... 59
- RT & XRT Skirts..... 60-61
- Toolbox Hardware Kits & Mudflaps..... 62
- RT Decals..... 63
- XRT Decals..... 64
- RT & XRT Arbors, Risers & Locks..... 65
- RT & XRT Spinner & Riser Assembly..... 66
- RT & XRT Spindle & Hub Assembly..... 67
- RT Winder..... 68
- XRT Winder..... 69
- RT & XRT Winder: Drive Sprocket Assembly... 70
- RT & XRT Winder Motor Assemblies..... 71
- RT & XRT Winder Valve Assemblies..... 72
- RT & XRT Pressure Guage Options..... 73
- RT & XRT Brake Mount (No Power)..... 74
- RT & XRT Brake Mount (Powered)..... 75
- RT & XRT Brake & Anti-Spin Bar..... 76
- RT Dump Box & Dump Box Spinner..... 77
- Rear View Camera Mounting Kits..... 78
- Bed Mounting Kits..... 79

Specifications

RT MODEL SPECS

BED MODEL	876	879	976	984	988
REAR WHEELS	Single	Single	Dual	Dual	Dual
DIMENSIONS	7’1” x 8’11”	7’1” x 9’10”	8’ x 8’11”	8’ x 9’10”	8’ x 11’10”
CAB-TO-AXLE	56-58”	60”	56-58”	60”	84”
TRUCK BRAND	All	Ford/Ram	All	All	All
SETUP CODE	Box Removal	Cab/Chassis	Box Removal	Cab/Chassis	Cab/Chassis
WEIGHT	2120	2220	2195	2420	2670

**Length of all flatbeds includes 6” for crosstube*

Grip Range	Minimum	Maximum	Max. Alt
Spinners	25"	52.4"	57.3"
Arbor	N/A	78.0"	N/A

XRT MODEL SPECS

BED MODEL	XRT60	XRT84
REAR WHEELS	Dual	Dual
DIMENSIONS	8' x 10'1"	8' x 12'1"
CAB-TO-AXLE	60"	84"
SETUP CODE	Cab/Chassis	Cab/Chassis
WEIGHT	3000	3200

Grip Range	Minimum	Maximum
Spinners	27.923"	51.923"
Arbor	N/A	N/A

BELOW BED TOOLBOX SELECTION CHART

BED MODELS	FRONT TOOLBOX	REAR TOOLBOX
876	30”	18”
879	30”	24”
976	30”	18”
984	30”	24”
988	2x 30” or 60"	24”
XRT 60	30”	XRT 24"
XRT 84	2x 30” or 60"	XRT 24"

BELOW BED BOX P/N’S

TOOLBOX	PART #
18"	263004
24"	263002
30"	263001
60"	272007
XRT 24"	272006

ABOVE BED BOX P/N’S

TOOLBOX	PART #
24"	272001
40"	272002
60"	272005

Details on pg. 58

SKIRT KIT P/N SELECTION CHART *Details on pg. 60*

BED MODELS	FRONT (1 TBX)	FRONT (2 TBX)	REAR (w/TBX)	REAR (no/TBX)
876	264062	N/A	264062	264053
879	264062	N/A	264062	264054
976	264062	N/A	264062	264053
984	264062	N/A	264062	264054
988	264088	264049	264062	264054
XRT 60	264062	N/A	264062	264054
XRT 84	264088	264049	264062	264054

Hydraulic System Specifications	
HYDRAULIC	Engine driven pump or self-contained battery powered E/H unit
SYSTEM PRESSURE	2700 PSI
OIL RESERVOIR CAPACITY	4.25 Gallons
OIL SYSTEM	2.75 - 3.75 gallons
OIL FILTER	Deweze 720043 (10 micron)
CYLINDER, LIFT	RT - 3.50" x 16.62" XRT - 4.00" x 15.31"
CYLINDER, SQUEEZE	2.00" x 39.25"
LIFT CAPACITY	RT - 3,100 LBS XRT - 5,500 LBS

Protective Coating	
PAINT	Urethane primer and topcoat
GATORHYDE	Long-lasting, textured polurea surface

DewEze Hydraulics

Hydraulic Oil Recommendations For Clutch Pump Systems
Based on Ambient Temperature

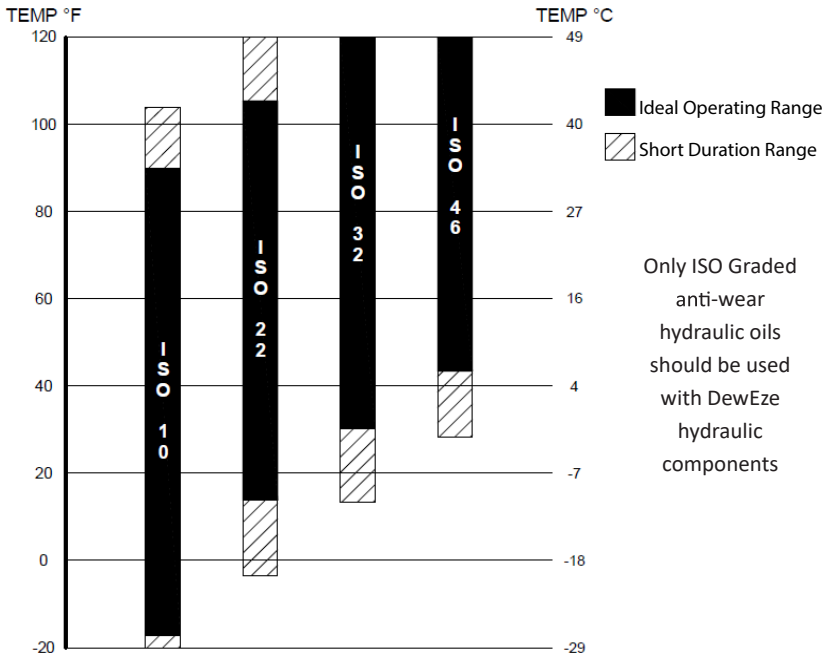

Only ISO Graded anti-wear hydraulic oils should be used with DewEze hydraulic components

Application Notes:

Reduce the oil viscosity by one grade in electric drive systems to prevent oil overheating.

For continuous operation in summer, consider using one grade higher oil viscosity.

Recommendations are only within normal operating conditions – any special application of the hydraulic system will require consideration of oil operating temperatures

Hydraulic Oil

- Fluid selection will affect hydraulic system performance.
- Consult your local oil supplier for help selecting fluid appropriate for your area. Consideration must be given between clutch pump or E/H.
- Change hydraulic oil filter after the first 40 hours, then every 250 hours or annually.
- Change contaminated or milky oil.
- Mixing fluids may cause foaming or viscosity issues.

Hydraulic System

- Replace quick-coupler o-rings if leaking.
- Heat 190° or greater may damage hydraulics. Hot spots may indicate a problem.
- Run the bed at least twice a month to prevent valve condensation
- For easy hookup of the couplers, turn the pump off leaving the valve and ignition on. Actuate function switches (squeeze/3rd bank) to relieve pressure.

XRT Feature Identification

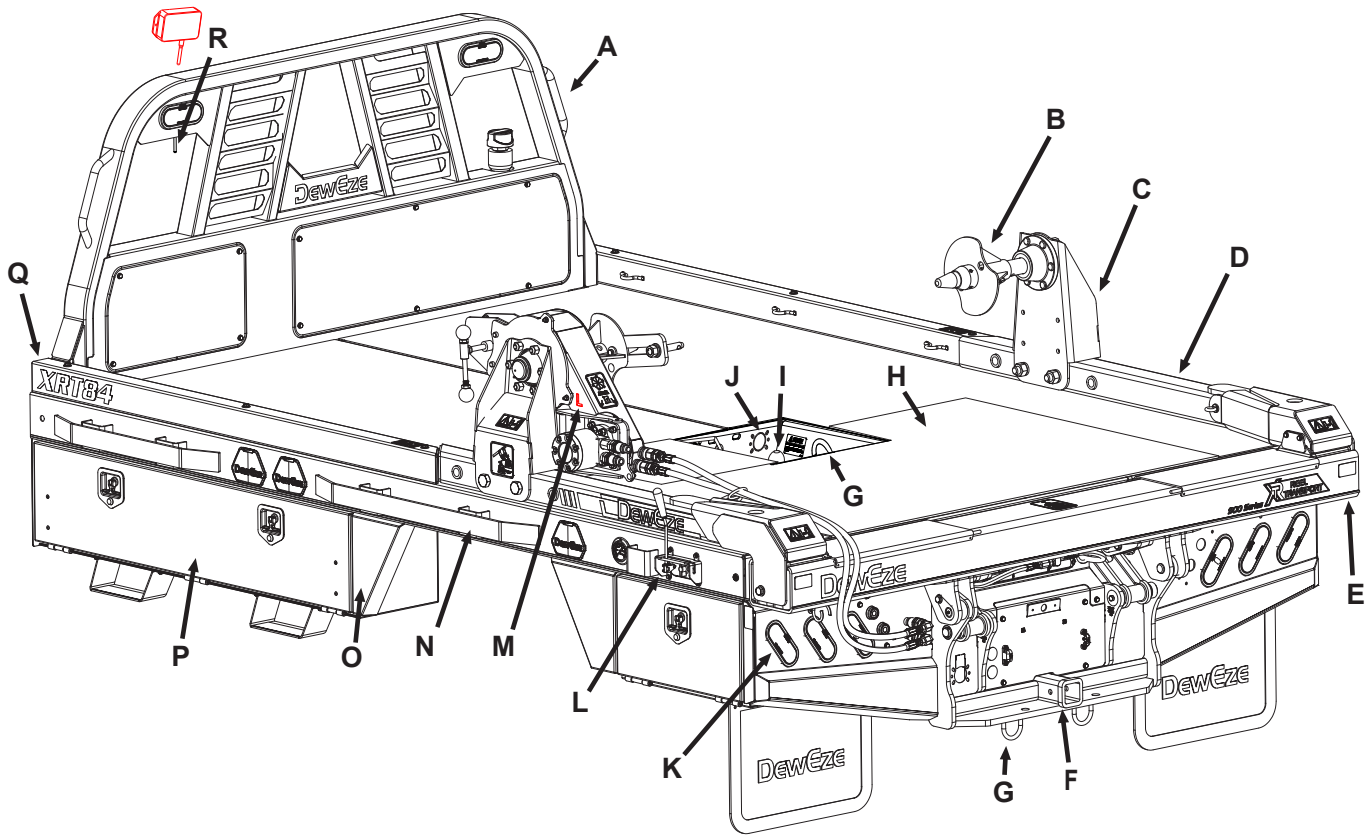

A. Headache Rack - Protects the rear pickup window. The hydraulic oil tank and valve are located in the headache rack.

B & C. Spinners & Risers (optional) - Used to grab reels and spin material off or onto the reel.

D. Squeeze Arms - Squeeze together to grip the reel and lift it onto the flatbed. When the arms are stored, they serve as side rails for the flatbed.

E. Crosstube - Houses the squeeze cylinder and guides the hugger arms.

F. Hitch Plate - 2.5” with a 2” adapter. Has holes for hitch pins.

G. Safety Chain Loops - Always use safety chains when towing.

H. Landing Zone - Designated area for optimal reel placement.

I. Gooseneck Hitch - Located under a cover plate in the middle of the bed.

J. Trailer Plug Knockout - Available space to install trailer plug in the ball well.

K. Lights - LED lighting for stop-tail-turn has long life and low current draw.

L & M. Winder & Controls - Winders and controls can now be mounted on either the Driver's side or Passenger's side.

N. Rub Rails - Tie-down locations for straps.

O & P. Skirts & Toolboxes (optional) - Mount under front and/or rear of bed on both sides. If using an electric/hydraulic power unit, it mounts inside the front passenger toolbox.

Q. Dummy Arms - Serve as side rail along with hugger arms.

R. Wireless Receiver (optional) - Mounted near headache rack lights for better access and reception.

RT Feature Identification

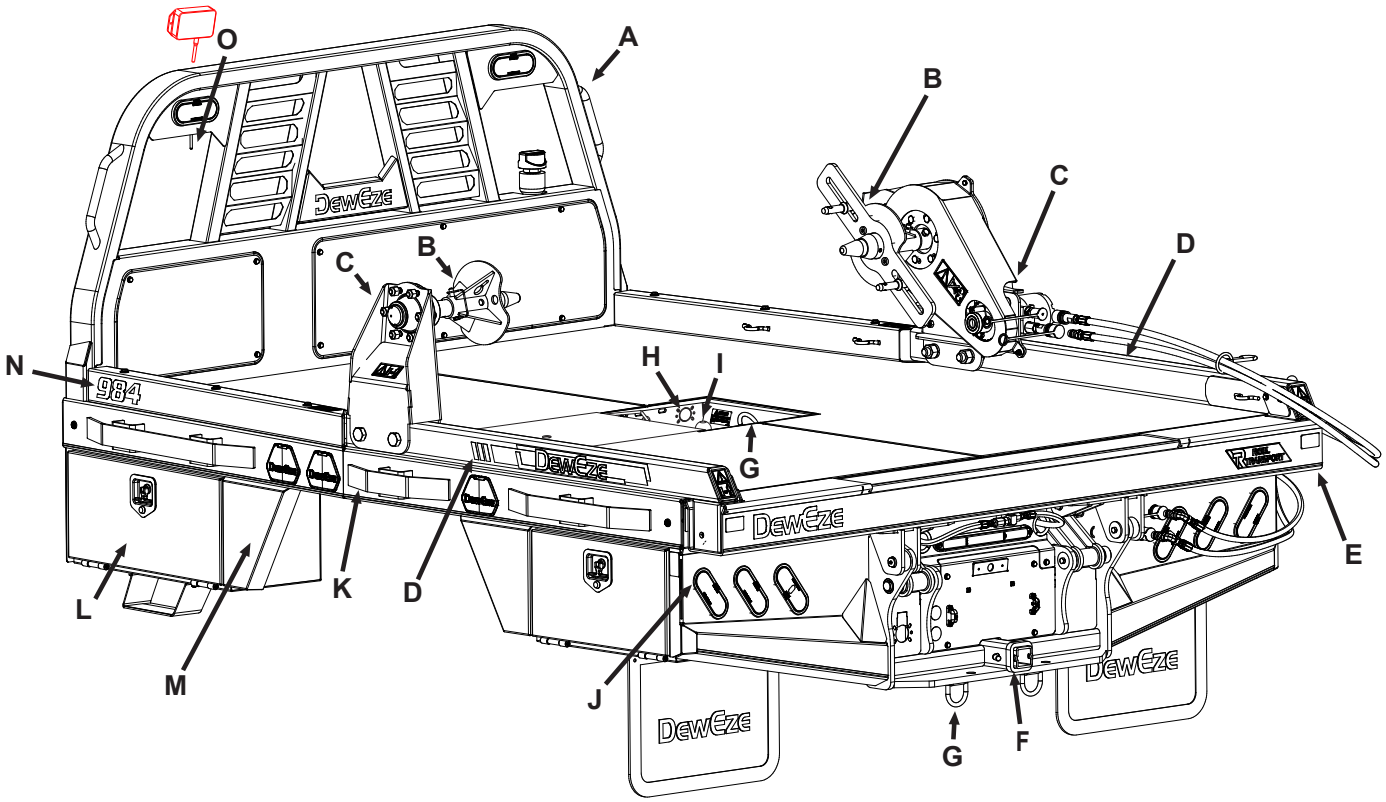

A. Headache Rack - Protects the rear pickup window. The hydraulic oil tank and valve are located in the headache rack.

B & C. Spinners & Risers (optional) - Used to grab reels and spin material off or onto the reel.

D. Squeeze Arms - Squeeze together to grip the reel and lift it onto the flatbed. When the arms are stored, they serve as side rails for the flatbed.

E. Crosstube - Houses the squeeze cylinder and guides the hugger arms.

F. Hitch Plate - 2.5” with a 2” adapter. Has holes for hitch pins.

G. Safety Chain Loops - Always use safety chains when towing.

H. Trailer Plug Knockout - Available space to install trailer plug in the ball well.

I. Gooseneck Hitch - Located under a cover plate in the middle of the bed.

J. Lights - LED lighting for stop-tail-turn has long life and low current draw.

K. Rub Rails - Tie-down locations for straps.

L & M. Skirts & Toolboxes (optional) - Mount under front and/or rear of bed on both sides. The Electric/Hydraulic Power unit mounts inside the front passenger toolbox.

N. Dummy Arms - Serve as side rail along with hugger arms.

O. Wireless Receiver (optional) - Mounted near headache rack lights for better access and reception.

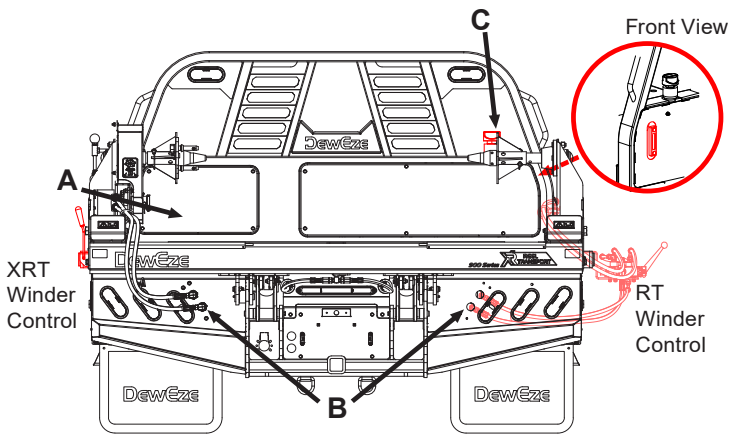

A. Valve Compartment – Houses the hydraulic valve.

B. Rear Ports – Connect optional winder controls through the rear port hydraulic fittings. XRT mounts DRV or PSS side, RT is PSS only.

C. Hydraulic Oil Fill & Sight Glass – Check hydraulic oil level with sight glass. The end of the graduated marks is "full". New installs fill to "full", run all functions, then re-fill to "full."

Safety

Operator safety is of utmost concern when developing a new piece of equipment. Designers integrate as many safety features as possible. Most accidents can be avoided by taking an extra moment of preparation, handling the equipment carefully, and observing the precautions in this section. To avoid personal injury, study the safety warnings and cautions listed in this manual and follow them.

General Equipment Safety

- This equipment can be dangerous to children and persons unfamiliar with its operation. Only responsible adults familiar with the machinery and trained for this unit should operate it.
- Do not allow persons to operate or assemble this unit until they have read this manual and have developed a thorough understanding of the safety precautions and how the unit works.
- Do not attempt to operate equipment under the influence of drugs or alcohol.
- Review the safety warnings and cautions with all users annually. If you have any questions not answered in this manual or require additional copies, contact your dealer or Harper Industries.

Reel Transport Operation Safety

- Ensure all safety pins are in place and flatbed mounting bolts are secure to the truck frame.
- Ensure hinges, joints, and sliding parts are well greased, especially during off season to prevent rusting and binding.
- Check with truck dealer for any load limits, additional suspension or tire requirements. The flatbed's lifting capability may exceed the truck's load capacity in some instances.
- Replace any CAUTION, WARNING, DANGER or instruction decal that is illegible or missing. Decals are available from your Deweze dealer.



202146
Safe Distance



400014
XRT Shield Warning



202144
Safe Distance

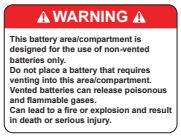

202180
E/H Battery Warning



202145
Safe Distance

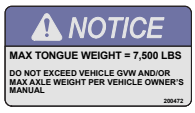

200472
Tongue Weight Notice

CAUTION: In cold weather, let engine idle for 5-10 minutes with pump on before operating arms to warm oil. Neglecting to do so may cause hydraulic pump failure.

Hydraulic Safety

- Do not operate the hydraulic system with the hood open.
- Do not activate the electric clutch unless the truck engine is at idle. **Operating the clutch at or above 2000 rpm will damage the pump.**

INITIAL STARTUP PROCEDURE

- Fill the reservoir monitoring the level via the sight glass (approx 4.25 gal).

SAFETY WARNING!

Operating hydraulics with air in the lines can cause injury and damage to machinery. Follow these procedures when first filling with fluid or after maintenance that could have caused air to enter the lines.

- Push UNLOAD until the arm raises to 45° angle or less, then LOAD until the arms rest on the bed. Repeat 6 times to ensure cylinders are full and air has been purged over relief.
- Check oil level at sight glass and add oil as necessary.

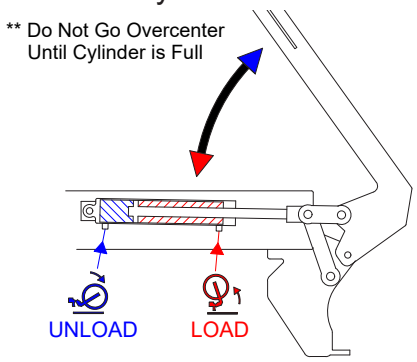

- With arms elevated to clear obstacles, UNSQUEEZE until both arms are fully opened then SQUEEZE until both are fully closed. Repeat 6 times to ensure cylinders are full and air has been purged over relief.
- Check oil level at sight glass and add oil as necessary.
- Cylinders out of sync will rephase when Unsqueezed to end of stroke.
- Check oil level at sight glass and add oil as necessary.
- Inspect system for leaks.

SAFETY WARNING!

Hydraulic fluid escaping under pressure can penetrate the skin and may cause death if not treated immediately.

CAUTION: In cold weather, let engine idle for 5-10 minutes with pump on before operating arms to warm oil. Neglecting to do so may cause hydraulic pump failure.

Getting Started

The hydraulic flow is made available via the upfitter switches located in the cab of the truck. One switch is to provide power to the valve, the other switch is used to turn on the pump. Both switches must be in the ON position for any bed functions to be performed.

The operator can control the functions of the arms (load/unload, and arms squeeze in and out) via the switches located on the front side of the headache rack, located on the driver's side. These functions can also be controlled via a wireless remote.

Operating Instructions

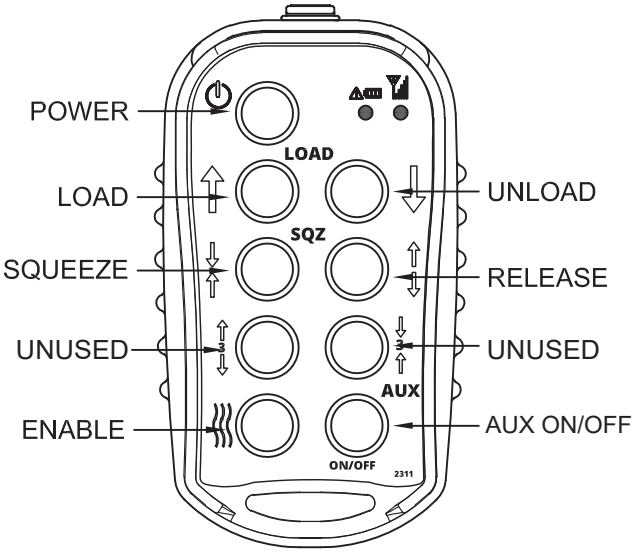

Remote Control Transmitter

- To sync the transmitter to the reciever, refer to *"Appendix II" on page 19*.
- Operates functions of the flatbed using USB rechargeable internal battery.

- Wireless transmitter LEDs:
  Green = TRANSMIT
  Red = BATTERY/DIAGNOSTICS
- The green light flashes rapidly when there is communication with the receiver.
- The red light blinks once per second if the battery is low.
- If the red light blinks a specific sequence of times, it is flashing an error code. Refer to the ERROR CODE CHART in *Appendix II*.
- The ENABLE button must used before any operation, and times out after approximately 3 seconds. After which, it needs to be re-enabled etc.

Arbor & Riser Attachment

Beginning Operation

- Place 12” cradles on hugger arms where desired and secure with 4” bolts.
- Slide arbor into reel and secure with one of the L-shaped pins.
- Turn pump switch on the dash to the “ON” position. (Red light will indicate the pump is on).

Loading

- Back the truck towards the reel with the arms spread apart.
- Position the cradles over the shaft and lower until they are fully seated.
- Secure the shaft in the cradles with the L-shaped pins.
- Lift the reel onto the truck.

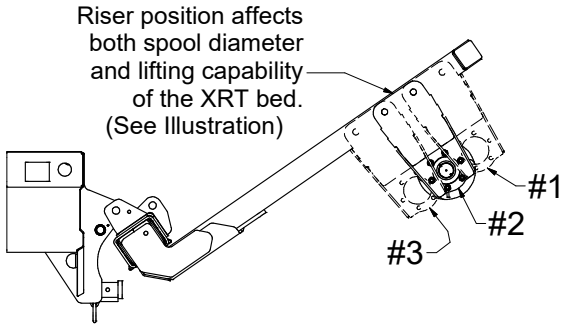

Unloading

- To unload, do the reverse of the loading operation.

Pay-out

- Position the truck on as level terrain as possible and parallel to the direction the cable will be pulled, then set the parking brake.
- Pick the reel up a few inches off the flatbed so it will turn freely.
- The pump may be turned off during the unrolling operation.
- Take precautions necessary to ensure that the reel unrolls smoothly.
- Begin pay-out.

SAFETY WARNING!

When hauling a reel, make sure it is resting on the flatbed and is tightly secured (Fig 1).

Carrying a reel behind the bed (Fig 2), places excessive stress on the lift cylinder, linkage, pins and shaft. Dislocation of a reel could result in serious injury or death to passengers of vehicles following behind.

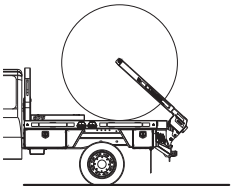

Fig. 1

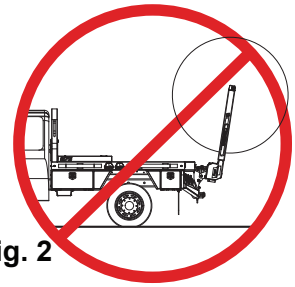

Fig. 2

CAUTION: Do not exceed GVRW rating of truck when loading.

RT, Reel/Spool Diameters & Lifting Capacities

The diagrams below shows the largest and smallest spools and how each affects relative lifting capacity.

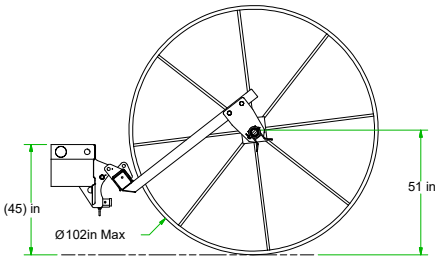

3100 lbs.

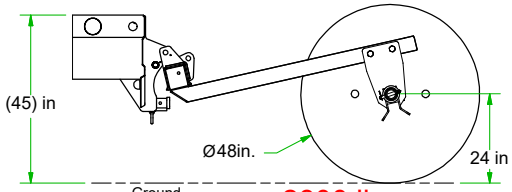

2800 lbs.

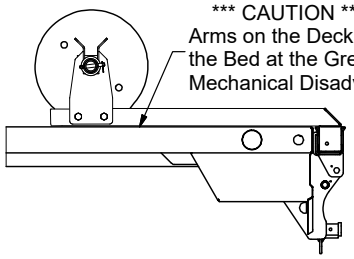

*** CAUTION ***
Arms on the Deck Place the Bed at the Greatest Mechanical Disadvantage.

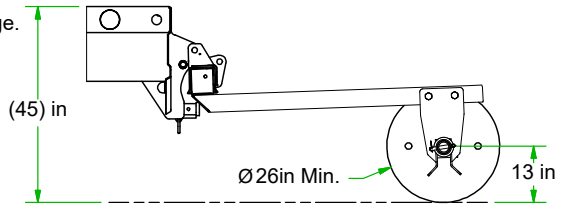

1900 lbs.

1/29/2025

XRT Riser Position, Reel/Spool Diameters & Lifting Capacities

The diagrams below shows the largest and smallest spools corresponding with each riser position. Also how each riser position affects relative lifting capacity.

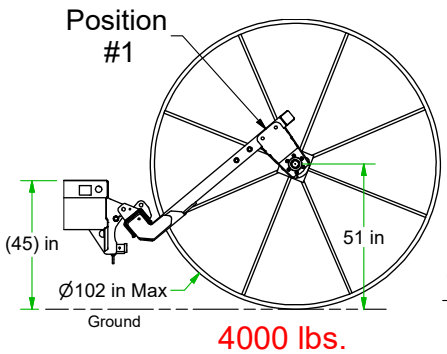

4000 lbs.

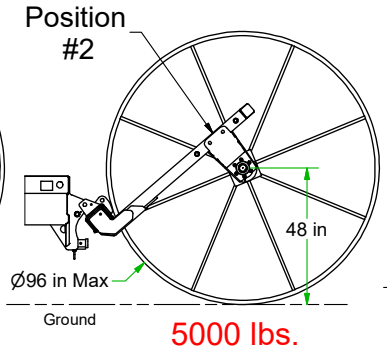

5000 lbs.

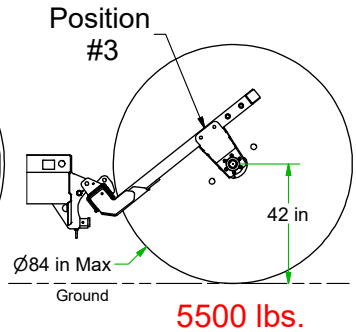

5500 lbs.

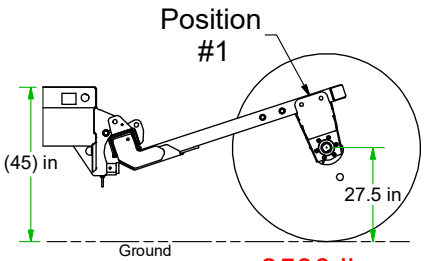

3500 lbs.

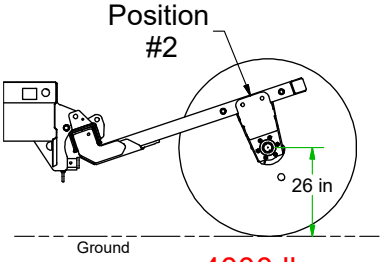

4000 lbs.

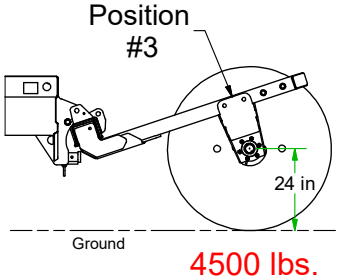

4500 lbs.

11/22/2022

RT Spinner Configuration

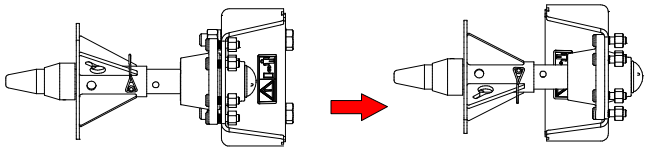

Alternate spindle mounting gives more clearance

Minimum Reel Size

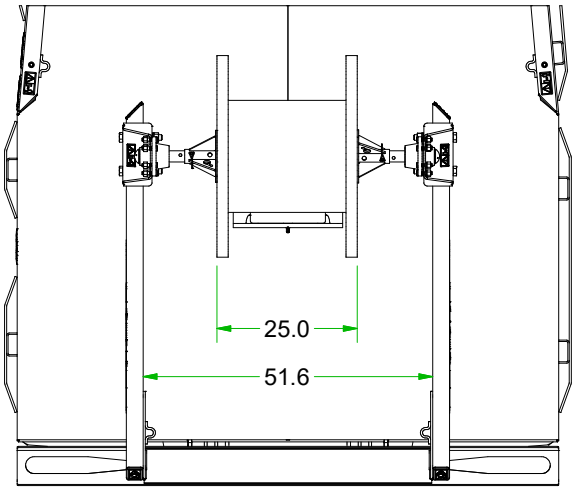

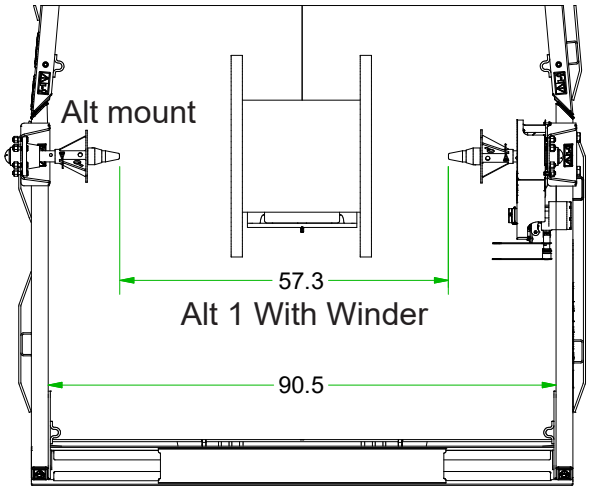

Max Reel Size: Normal Configuration

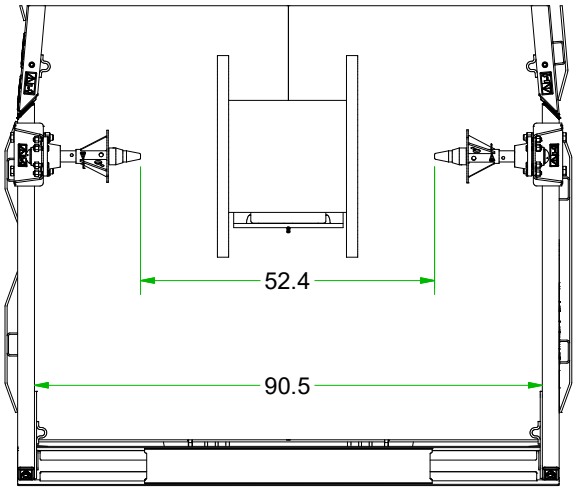

Max Reel Size: Alternate Configuration

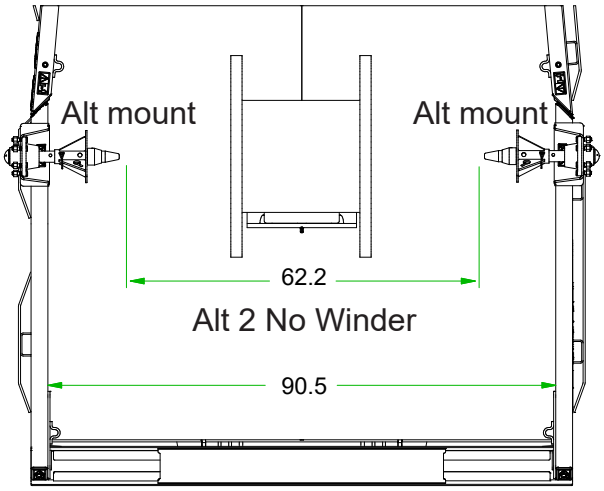

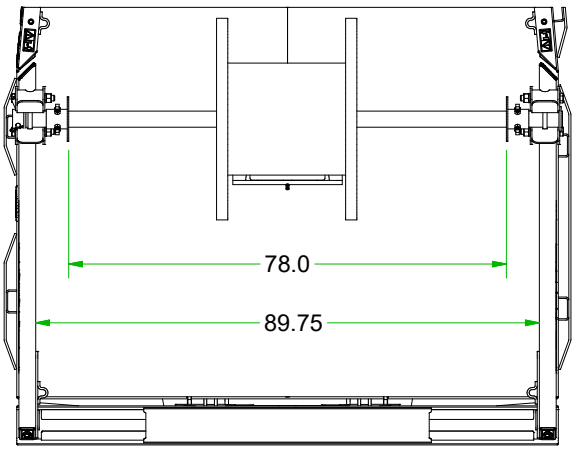

XRT Spinner Configuration

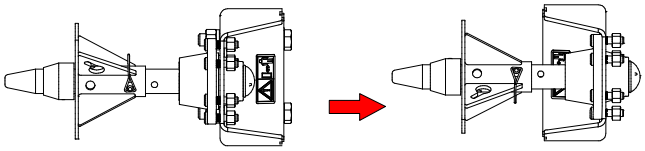

Alternate spindle mounting gives more clearance

Minimum Reel Size

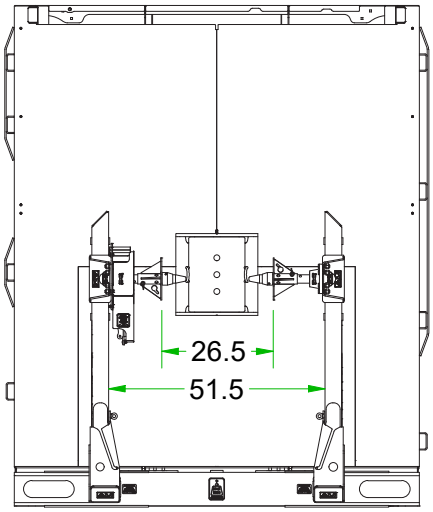

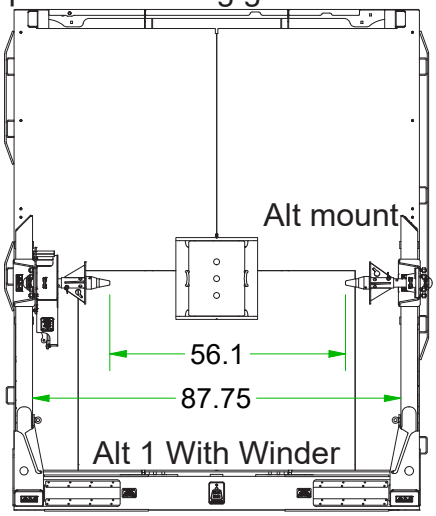

Max Reel Size: Normal Configuration

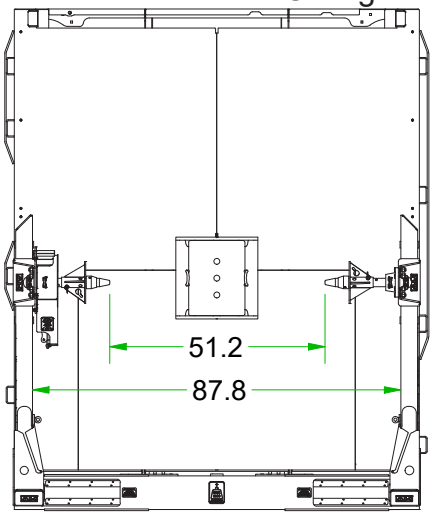

Max Reel Size: Alternate Configuration

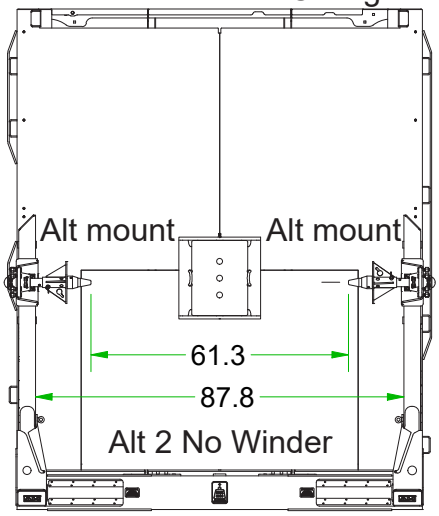

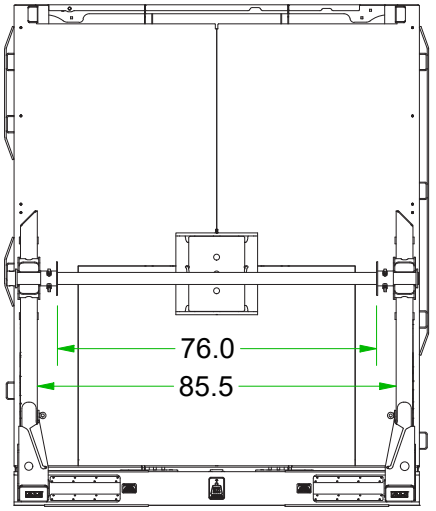

Reel Power Attachment

In order to use the hydraulic winder attachment, a third bank valve must be installed.

For best performance, the Deweze CPK system is recommended. The Reel Power attachment requires a hydraulic system capable of providing 4-5 gpm. Reduced flow will result in diminished speed. **Do not exceed 8 gpm.**

- RT Transports store the hydraulic winder attachment in the passenger side, underbody toolbox. This attachment should be placed in the rear stake pocket of the bed. Note: you must raise the arms off the bed in order to access the stake pocket. **DO NOT DRIVE ON PUBLIC ROADS WITH WINDER VALVE ASSEMBLY IN THE STAKE POCKET.**
- Clean hydraulic fittings prior to connecting the valve to the hydraulic motor and the couplers on the rear of the body. Tailboard couplers are a push/pull operation, motor couplers slide the sleeve forward or backward to insert or remove.

Note: It may be necessary to reverse the tailboard couplers if the flow is in the wrong direction.

- To operate the winder, the third bank latching switch must be turned on, this is located on the front side of the headache rack on the driver's side or the AUX button on the remote. This provides oil flow to the winder valve.

Note: The load/unload and squeeze/unsqueeze functions should not be operated when third bank latching function is ON.

The hydraulic winder valve is a manual valve that can be used to pay out or take up. There's a flow control that will allow the operator to adjust the speed of rotation based upon the situation.

Note: always start out with the flow control in the lowest setting.

- An optional pressure gauge can be installed to monitor pressure applied to the material being pulled.

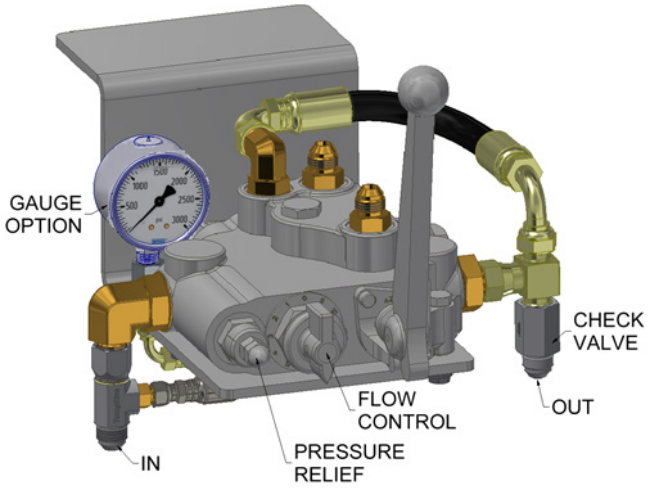

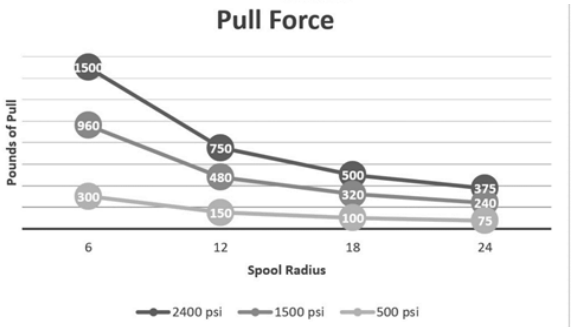

Your winder attachment comes with a brake system that can be manually adjusted to reduce the amount of backlash.

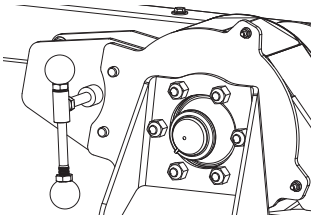

- For take up, drive engagement pin must be installed.
- If free spooling material off the reel, the drive engagement pin that couples the hydraulic motor to the reel, must be removed. This will allow the reel to spin freely, not fighting the hydraulics of the system.
- The drive engagement pin should be stored when not in use or during transport.

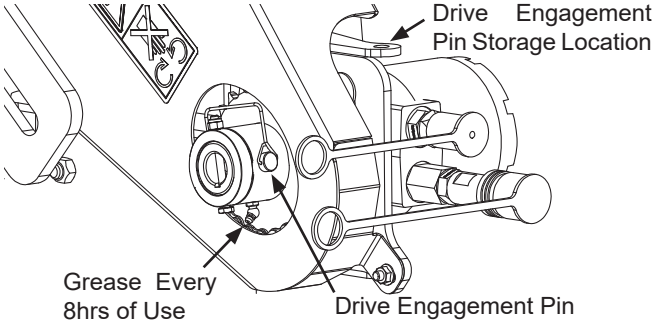

To disconnect the valve, relieve pressure after completion of the take up/pay out operation.

- Turn off the upfitter switch for the pump, leave the upfitter switch that provides power to the valve ON.
- Move the take up valve both directions to relieve any pressure. Turn off the third bank and operate the load/unload and squeeze/unsqueeze functions to remove all system pressure.
- Hydraulic lines can be disconnected.

NOTE: Inspect drive chain for proper tension prior to operation.

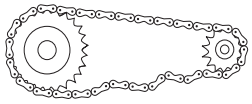
Too much slack. Chain too loose.

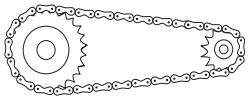
No slack. Chain too tight.

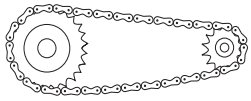
About 1/4" play. Chain correct.

NOTE: When engaging spindles with the reels, adjust pins on anti-spin bar to align with drive holes on spool, do not over squeeze. Only penetrate the reels to the point that you are resting against the flat face of the spindle, otherwise premature arm failure or reel damage could occur.

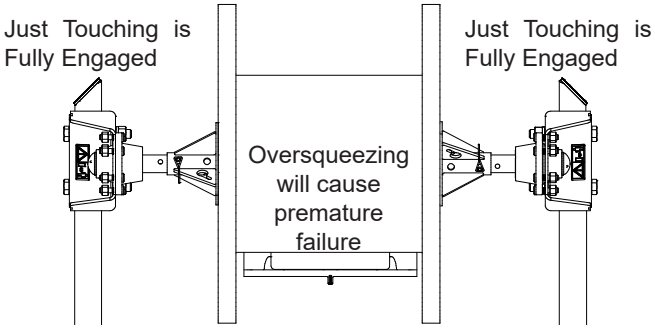

Storing the Arms

- Close the arms partially and lay them on the flatbed.
- Open arms until they are flush with the side of the bed. They now function with the dummy arms as the bed's side rails.

Turn System Off

- Turn the pump off when it is not in use.
- It is best to relieve pressure as previously stated.

DewEze E/H Option (RT and XRT)

Heavy Duty EH is an option with the RT and power winder options with the following conditions/limitations:

1. The pull force is limited to 500 Lbs.
2. The winder is not used more than 30 minutes out of an hour.
3. The truck chassis needs an alternator of at least 175A, the larger the alternator (or dual alternators) the better.

The Hybrid EH is **NOT** an option for the power winder but is a higher speed option for non-winder units. Following conditions will offer best performance for non-winder units:

1. Truck chassis should have a large capacity charging system (large alternator or dual alternators)
2. The secondary battery installed should be of highest capacity possible.

Note: The Hybrid EH is not suitable for power winder equipped units as the system will not be able to maintain an even battery charge to the secondary battery when used for long durations i.e., running the winder motor.

Maintenance

Check Daily or Before Use

- Ensure the hydraulic oil level is “Full” via the sight glass.
- Check the belt, belt tensioner and idler pulleys on engine clutch pump system.
- Examine the hydraulic hoses for leaks with an object such as cardboard.

Lubrication

Grease the locations indicated in the following illustrations once per week while the unit is in use and at the end of each season (same locations on right and left).

1-4: Idler link pins, idler arm bases, crosstube hinges, lift cylinder *rod* ends.

5: Lift cylinder *base* end

6: Winder drive sprocket assembly

7: Liberally apply grease to parallel arm metal-on-metal contact surfaces.

SAFETY WARNING!

Use extreme caution when greasing the flatbed. Completely lower arms to expose rear zerks and turn off ignition.

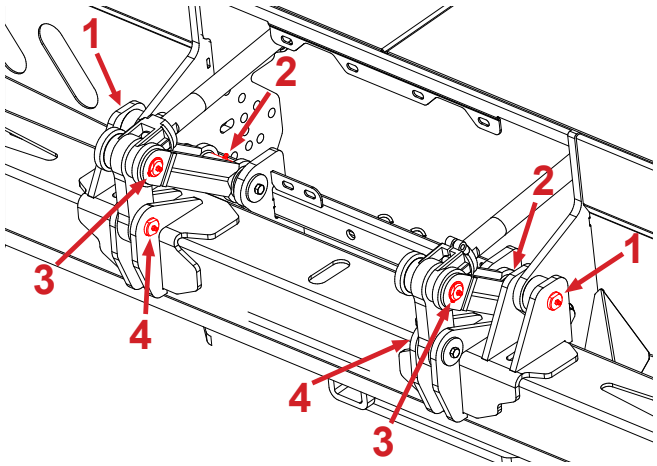

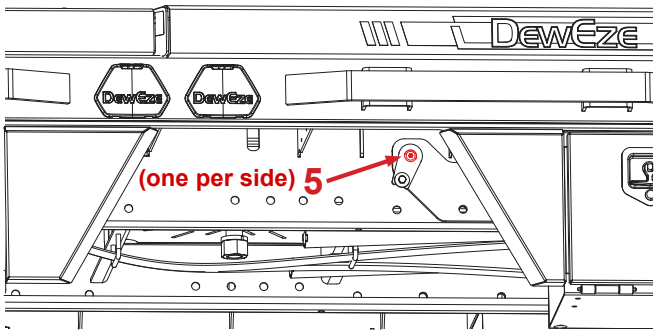

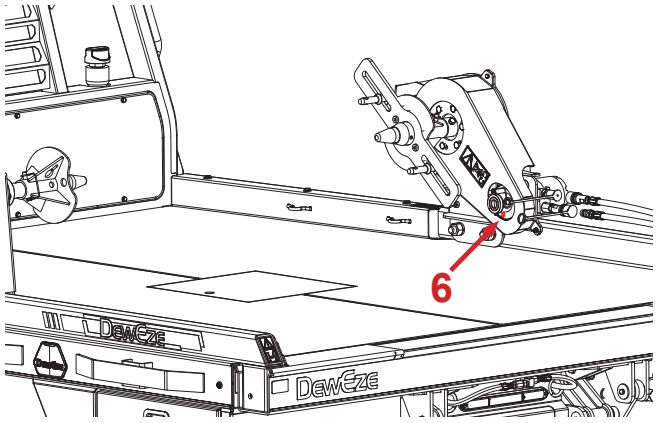

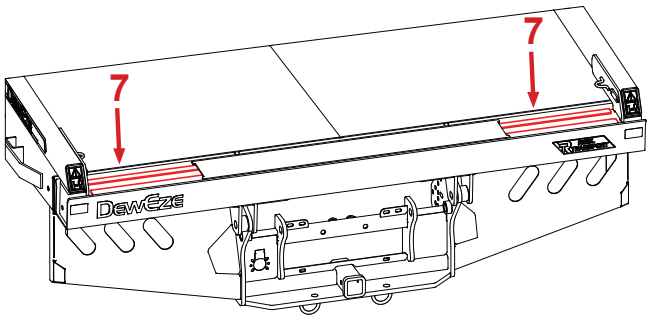

TROUBLESHOOTING		
Problem	**Symptom**	**Possible Solution**
Hydraulic Pump	No Oil Flow	• CHECK OIL LEVEL IN RESERVOIR. If oil level is low, check for leaks in system then re-fill to FULL. • CHECK BELT TENSION. Replace tensioner or tighten idlers if needed. Replace belt if worn. • CHECK FOR SHEARED KEY ON PUMP SHAFT. Replace key. • CHECK IF SUCTION HOSE COLLAPSES IN SUCTION. Locate and remove obstruction. • CLUTCH NOT FUNCTIONING. See possible clutch solutions. • INTERNAL PUMP DAMAGE. Seek assistance from dealer.
Hydraulic Pump	No Oil Pressure	• HYDRAULIC OIL LEAKS IN SYSTEM. Take safety precautions and check for leaks. Tighten fittings and replace damaged hoses. • CHECK FOR MALFUNCTIONING SWITCH. Replace switches. • BELT OR CLUTCH MAY BE SLIPPING. Replace tensioner or tighten idlers if needed. Replace belt if worn. • VALVE NOT FUNCTIONING. Check for disconnected wires at solenoid or corroded ground wires. Check coils for magetism. Clean cartridge ports. • PRESSURE RELIEF MAY BE TOO LOW OR BROKEN. Set to 2700 psi. • PUMP WORN OR DAMAGED. Seek assistance from dealer.
Clutch	Does Not Engage	• CHECK FOR BLOWN FUSE. Replace fuse. DO NOT exceed 30 amps. • CHECK WIRE TO CLUTCH. Insure no breaks or shorts • CHECK FOR BAD SWITCHES IN SYSTEM. Replace switches. • CLUTCH IS WORN OUT. Seek assistance from dealer.
Belt (s)	Jumps Off Pulley	• BELT(S) TOO LOOSE. Replace tensioner or tighten idler pulleys. • EXCESSIVE BELT WEAR. Replace worn belt(s). • CHECK FOR LOOSE PUMP BRACKET. Tighten bolts, replace worn ones. • CHECK CRANKSHAFT PULLEY FOR LOOSE OR BROKEN BOLTS. Tighten bolts, replace worn ones. • CHECK ALIGNMENT OF IDLER PULLEYS AND CONDITION OF BEARINGS. Re-align idler pulleys or replace worn idler pulleys. • CHECK ALIGNMENT OF CLUTCH AND CRANKSHAFT PULLEY.
Arms: Squeeze	Out of Sync	• Open arms all the way out. • CYLINDERS PLUMBED WRONG OR LEAKING. Re-check plumbing and check for any hydraulic oil leaks that may be present. • BLEED AIR OVER RELIEF. Fully squeeze/unsqueeze 6 to 7 times. • CYLINDER OR SEALS ARE BAD. Replace cylinder or seal kit.
All Bed Functions	Not working	• 3RD BANK LEFT ON. • "B" CARTIDGE NOT FUNCTIONING. Ensure its coil is magnetizing. Remove cartidge and clean. It should rattle when shaken.

Appendix I – GatorHy

GatorHyde Repair Instructions

Required items:

1 – 25 x 25 ml caulking gun (202030)
1 – 25 x 25 ml cartridge set of GatorHyde Repair Material (202031)
1 – pair of rubber gloves
1 – wooden stick
1 – Instruction sheet and MSDS sheet
1 – MEK – methyl ethyl ketone solvent (available at most hardware stores)
1 – small paint brush
2 – plastic cups

⚠ SAFETY WARNING!
Read the Master Safety Data Sheets (MSDS) on all chemicals before handling any chemical.
See: http://www.msds.com

Note:

This repair is designed to easily fix small, damaged areas fast and with limited amount of effort. However this product is fast reacting so make sure to thoroughly read this instruction sheet before proceeding with repairs.

Application Instruction:

Step 1. Before you start, put on rubber gloves and safety glasses.

Step 2. Place a piece of cardboard or newspaper next to the repair area prior to opening and mixing the material.

Step 3. Cut back damaged area with a razor knife to make a square.

Step 4. Sand area and feather edges with 40 grit sandpaper. Blow out sanded area to get rid of dust.

Step 5. Clean area well with MEK solvent and allow to dry for 30 minutes.

Step 6. Attach static mixing wand to 25 x 25 ml cartridge set, twist and lock in place. Insert cartridge into caulking gun.

Step 7. Hold the caulking gun in an upright position in one hand, then set the two plastic cups on a flat surface side by side. Next point the static mixing wand into a cup and squeeze the trigger of the gun two times so a small amount of material is discharged into the cup. (Note! This material is to be discarded.) Immediately move the static mixing wand over and point it into the next cup and continue to discharge the remaining amount of material into this cup.

Step 8. Allow the material to set in cup and gently stir with wooden stick for a period of 1 to 1 ½ minutes or until the GatorHyde becomes thicker and will stick to either a finger or wooden stick.

Step 9. Once material has begun to gel, apply enough product to finger or a stick and immediately dab onto damaged area. Use the paint brush to dab the area in a vertical manner to make a textured surface.

Cure time. Allow repaired area to cure for a period of 1 hour prior to heavy impact loading.

Clean-up. In order to clean up the area take a paper sack or plastic trash bag and place all the empty jars and remaining contents of the repair kit and dispose into a standard trash can or simply put everything back in the box and throw away.

GatorHyde Protective Coatings, Inc., 2210 South Highway 69, Wagoner, OK 74467 * (918) 485-2835 * www.gatorhyde.com

Appendix II

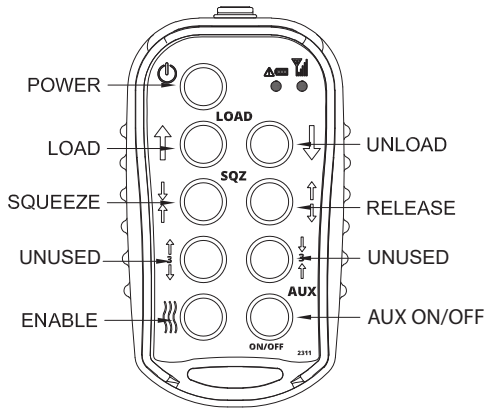

Remote Control

TRANSMITTER ERROR CODE CHART	
ERROR CODE	PROBABLE CAUSE
1	LOW BATTERY
2	FAULTY CIRCUIT TO OUTPUT A
3	FAULTY CIRCUIT TO OUTPUT B
4	FAULTY CIRCUIT TO OUTPUT C
5	FAULTY CIRCUIT TO OUTPUT D
6	FAULTY CIRCUIT TO OUTPUT E
7	FAULTY CIRCUIT TO OUTPUT F
8	FAULTY CIRCUIT TO OUTPUT G
9	FAULTY CIRCUIT TO OUTPUT H
10	FAULTY CIRCUIT TO LIGHT OUTPUT
ERROR CODE IS THE NUMBER OF RED BLINKS	

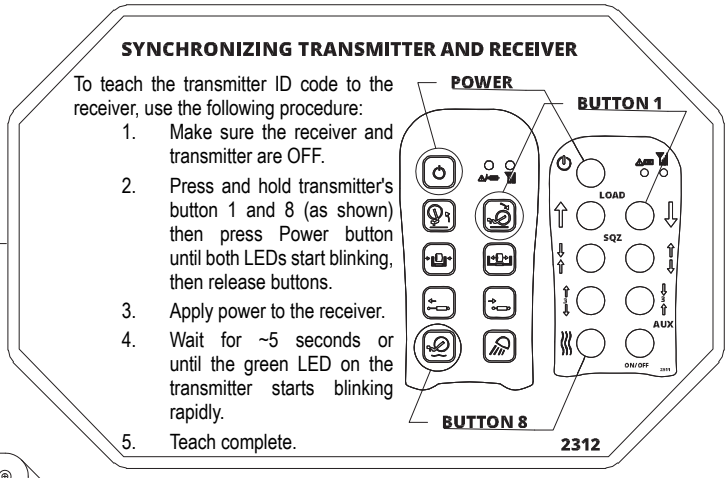

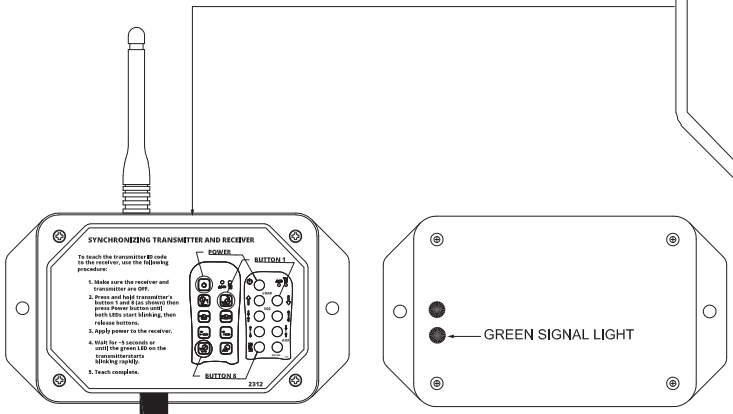

FIG. 1:RECEIVER WITH COVER REMOVED

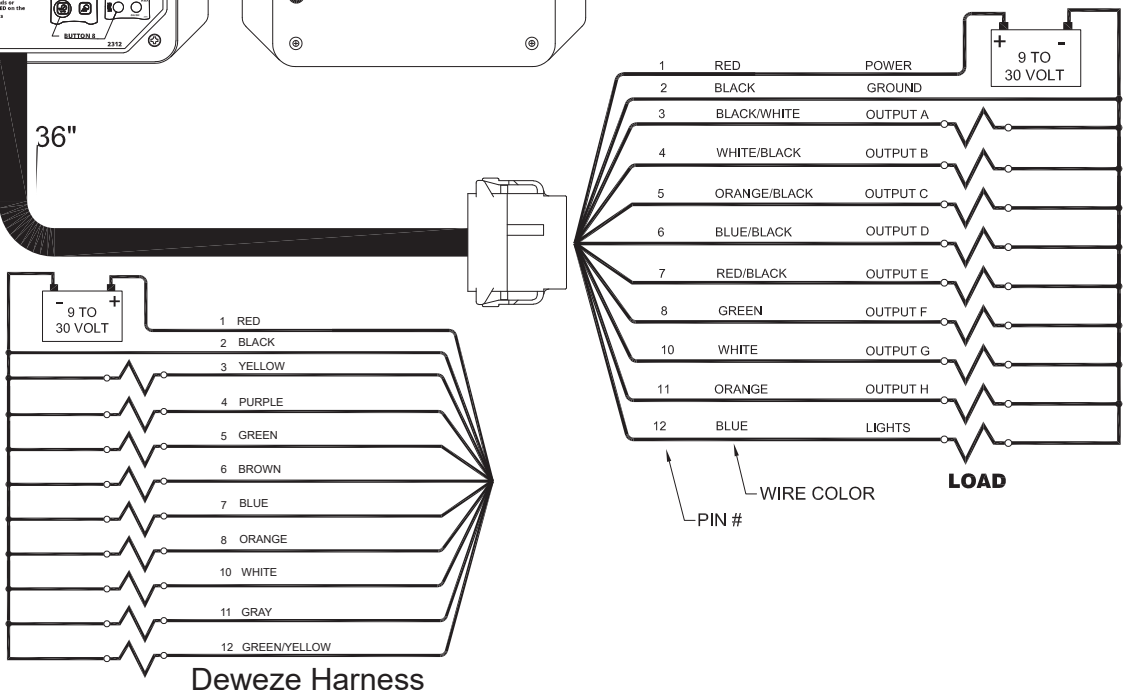

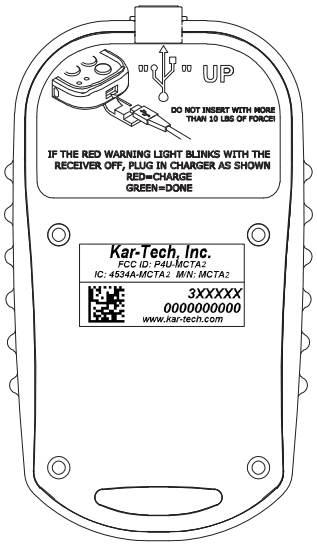

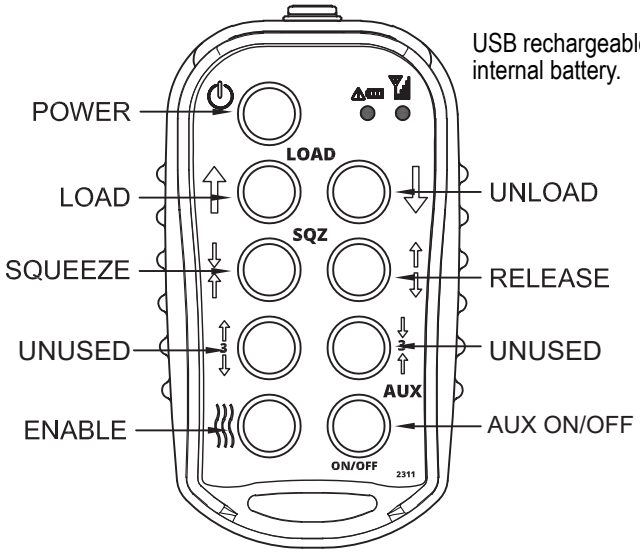

SYSTEM OPERATION:

Press and hold the power button on the transmitter until both LEDs turn on, then release. The green LED will flash rapidly when communication has been established. When the receiver is off, the red LED will flash slowly indicating this. With the receiver on, press the corresponding buttons on the tranmitter keypad to turn on and off each of the outputs.

INDICATOR LIGHTS:

The transmitter has two LED indicators, the red BATTERY/DIAGNOSTIC indicator and the green TRANSMIT indicator.
The green TRANSMIT indicator flashes rapidly whenever there is communication between the transmitter and the receiver.
The red BATTERY/DIAGNOSTIC indicator blinks once per second when the battery voltage is low. It also blinks when there is a problem with the system in the form of an error code. Refer to the ERROR CODE CHART tables for more information.
Note: To check for low battery, turn the receiver off and leave the transmitter on. If the transmitter red LED continues to blink, the battery is low. If the red LED blinks only when the receiver is ON, count the number of blinks and refer to the ERROR CODE CHART.

SLEEP TIME:

The transmitter is factory set to turn off (sleep) after 15 minutes. Use the following procedure to change the time before sleep mode.

1. Press and hold SQUEEZE, RELEASE, ENABLE & POWER (~5 sec) Both lights should blink once per second. Release the buttons.
3. Adjust *SLEEP* with the following buttons:
    a. UNLOAD = 15 min
    b. LOAD = 30 min
    c. RELEASE = 1 hr
    d. SQUEEZE = 2 hr
    e. ENABLE = sleep disabled.

RT/XRT PROGRAM (set at the factory)
POWER OFF - Receiver & Transmitter
POWER ON - Transmitter
HOLD buttons 1, 4 & 8 until RED light blinks
POWER ON - Receiver
PRESS **Button 8**.
PRESS transmitter PWR button to save selection and exit config mode.

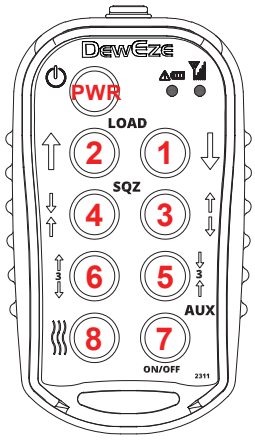

SPECIFICATIONS

Electrical:
- RF Transmit power (EIRP): 10 mW
- RF Frequency: 902-928 MHz

Transmitter:
- Power: 3.7 Lithium battery
- Operation time: 16 to 17 hours continuous

Receiver:
- Power 9 to 30 VDC
- Outputs: 5A max each (20A system max)

Environmental:
- Transmitter: 0°F to 131°F Receiver: -40°F to 185°F

Appendix III

Heavy Duty E/H Power Kit

* Read all instructions first. See page 52

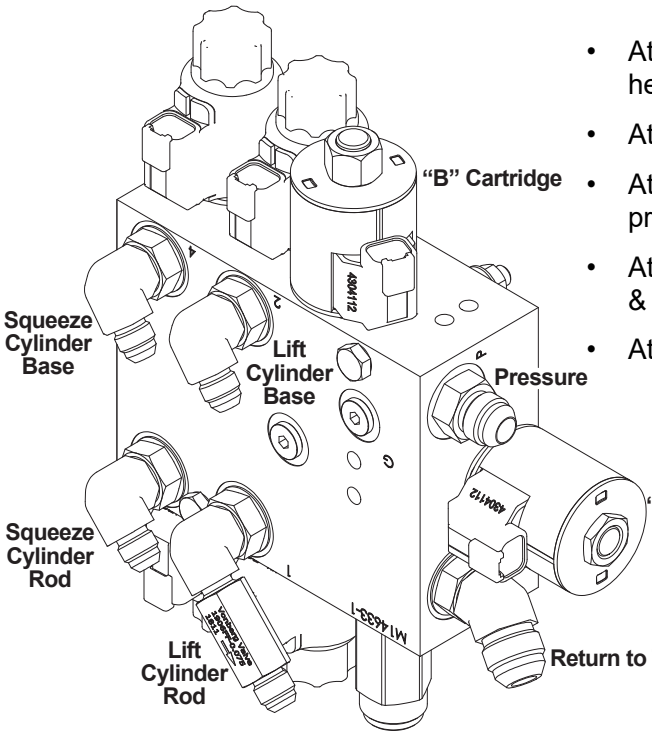

Valve details pg 41

- Attach adapters to valve and install inside cavity on headache rack.
- Attach valve harness per diagram on decal
- Attach return hose to valve and filter housing. Attach pressure hose from pump.
- Attach 1/2" hoses from squeeze cylinder to valve ports #3 & #4.
- Attach 3/8" hoses from lift cylinder to valve ports #1 & #2.

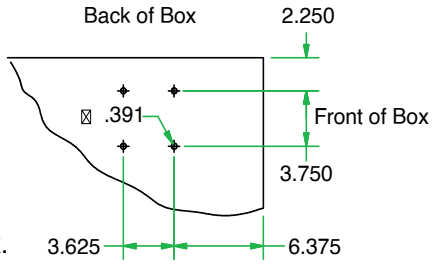

- Use cover plate to locate cutout in right side of toolbox.
- Use access cover or edge molding to protect hoses.
- Drill holes for 3/8" bolts as indicated and bolt pump to inside of toolbox.

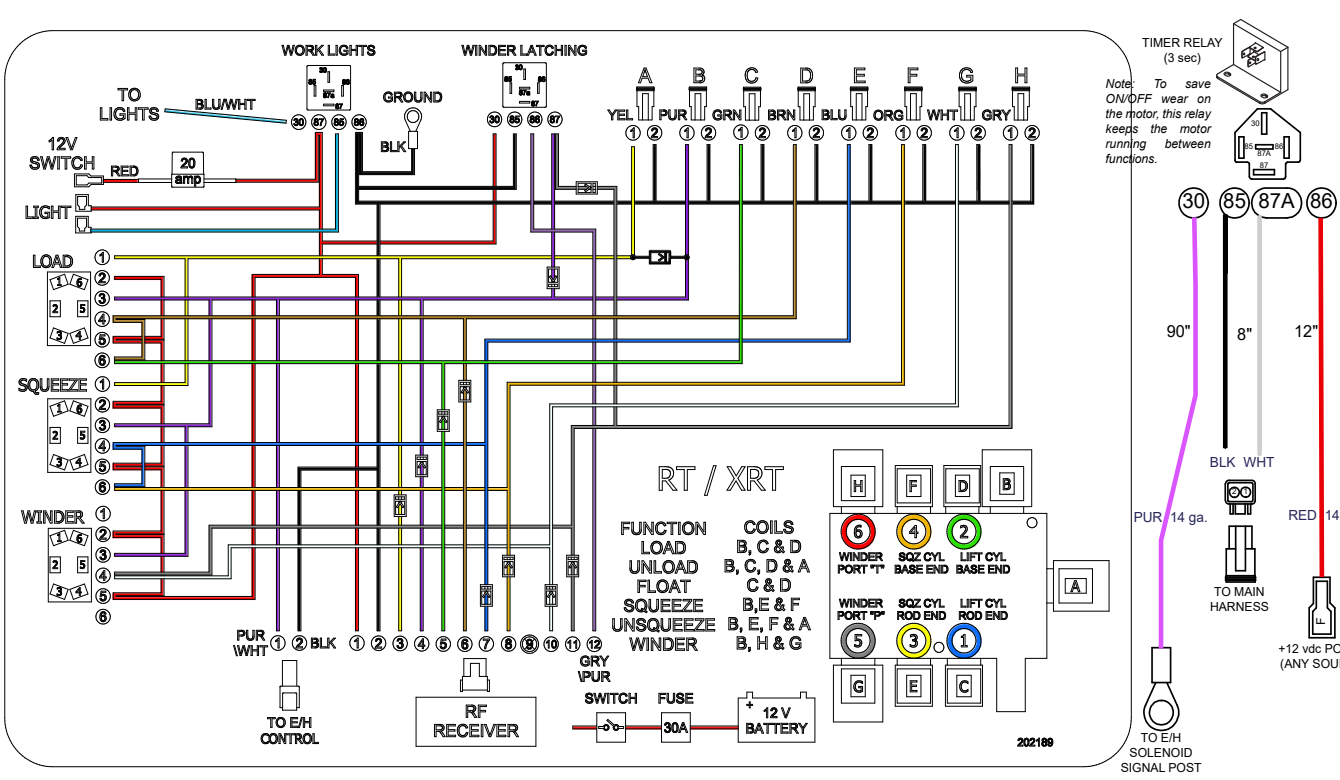

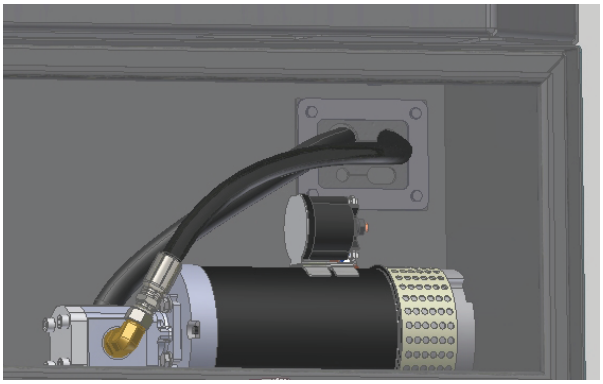

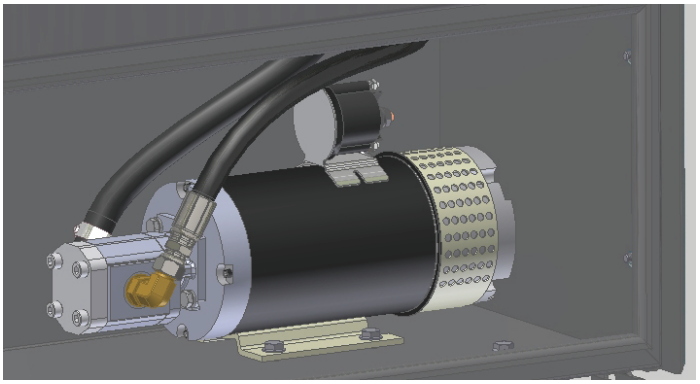

- Attach power harness as indicated.
- Attach 30-amp fuse holder to positive terminal on battery. Run wire through switch on dash and then to the red wire on the harness.
- Attach suction hose and pressure hose to pump with adapters provided.
- Attach suction hose to bottom of reservoir.
- Run battery cables through hole in toolbox and attach to E/H motor as indicated.
- Run battery cables along frame rail and attach black cable to negative terminal on battery.
- Attach 200-amp fuse holder to positive battery terminal.
- Insert 200-amp fuse.
- Attach red cable from E/H on top of “ice cube” fuse. Install rubber cap.

If installing the 735021 Switch Unit — Read the E/H Hybrid specific instructions first. Pg. 53

DEWEZE®

800/900 RT & XRT

PARTS

Table of Contents

PARTS SECTION

RT Dummy Arms..... 25
XRT Dummy Arms..... 26

Crosstubes & Arms

800 or 900 RT Crosstube, Arms w/Decals.....27-28
XRT Crosstube & Arms w/Decals..... 29

Cylinders

RT Squeeze & Lift Cylinders w/Linkage.....30-31
XRT Squeeze & Lift Cylinders w/Linkage.....32-33

Hydraulics

800 & 900 RT Hydraulic Schematic..... 34
RT Hose Routing: Lift & Squeeze..... 35
RT Hose Routing: 3rd Bank (General)..... 36
RT Hose Routing: 3rd Bank w/Winder..... 37
900 Series XRT Hydraulic Schematic..... 38
XRT Hose Routing: Lift & Squeeze..... 39
XRT Hose Routing: 3rd Bank w/Winder..... 40
RT & XRT Hydraulic Valve & 3rd Bank..... 41
RT & XRT Non-proportional 2 Bank Valve Kit.. 42
RT & XRT 3rd Bank Valve Kit..... 43
Hydraulic Reservoir & Filter.....44-45
Valve Switches Kit..... 46

Electrical Components

Electrical Harness Infographic..... 47
Electrical Harnesses.....47-48
Wireless Control..... 49
OEM to DewEze Harness Adapters.....50-51

E/H HD and Hybrid

Kits and Components..... 52
Hybrid Instructions..... 53

Common Parts and Options

Lights.....54-55
Headache Rack Covers & Components..... 56
Ball Well & Receiver Hitch..... 57
Rear Panel Assembly..... 58

RT & XRT Parts and Options

RT & XRT Above Bed Toolboxes..... 58
RT & XRT Below Bed Toolboxes..... 59
RT & XRT Skirts.....60-61
Toolbox Hardware Kits & Mudflaps..... 62
RT Decals..... 63
XRT Decals..... 64
RT & XRT Arbors, Risers & Locks..... 65
RT & XRT Spinner & Riser Assembly..... 66
RT & XRT Spindle & Hub Assembly..... 67
RT Winder..... 68
XRT Winder..... 69
RT & XRT Winder: Drive Sprocket Assembly... 70
RT & XRT Winder Motor Assemblies..... 71
RT & XRT Winder Valve Assemblies..... 72
RT & XRT Pressure Guage Options..... 73
RT & XRT Brake Mount (No Power)..... 74
RT & XRT Brake Mount (Powered)..... 75
RT & XRT Brake & Anti-Spin Bar..... 76
RT Dump Box & Dump Box Spinner..... 77
Rear View Camera Mounting Kits..... 78
Bed Mounting Kits..... 79

RT DUMMY ARMS

NO UPPER TOOLBOX

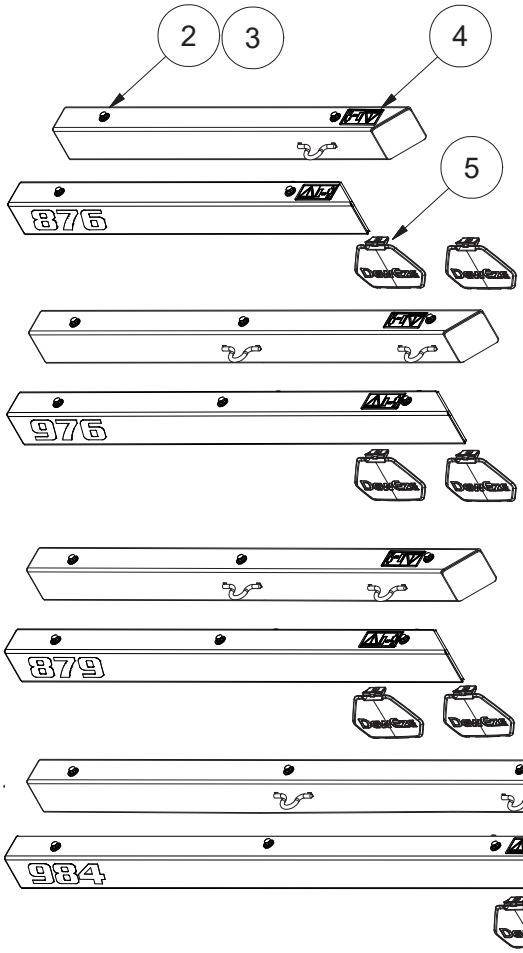

WITH UPPER TOOLBOX

W/24" TBX

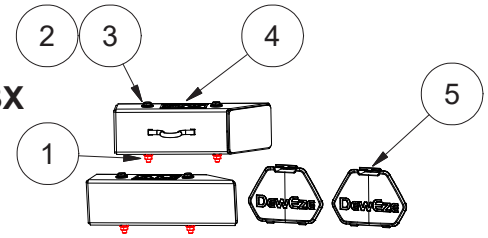

W/40" TBX

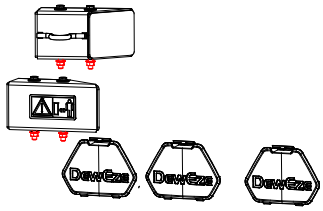

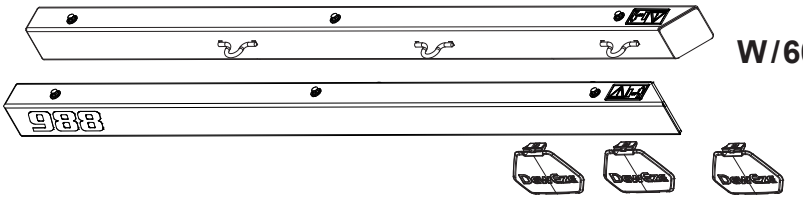

W/60" TBX

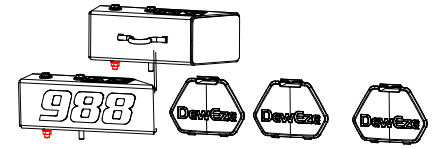

W/40" TBX

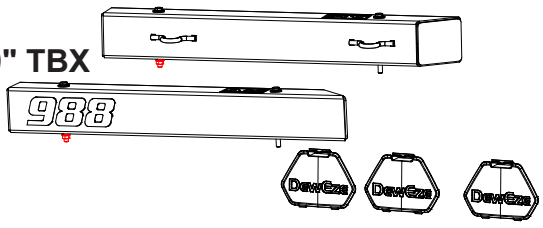

ITEM	PART #	DESCRIPTION
1	110645	Nut, 3/8-16 Wiz Flange
2	110676	Washer, 3/8" Flat Standard
3	111268	Bolt, 3/8-16 X 5 Wiz Flange, Gr. 5 Zinc
4	202144	Decal, Safe Distance, Horizontal
5	202168	Cover, Fuel & Def

MODEL DECALS

ITEM	PART #	DESCRIPTION
876	202170	Decal
879	202182	Decal
976	202171	Decal
984	202172	Decal
988	202183	Decal

BED MODELS	STANDARD No Upper TBX		SHORT RT ARM 60" Upper TBX		SHORT RT ARM 24" OR 40" Upper TBX		
	Driver	Pass.	Driver	Pass.		Driver	Pass.
876 RT	266051	266052	NA	NA	24"	266077	266076
976 RT	266055	266056	NA	NA		266077	266076
879 RT	266053	266054	NA	NA	40"	266075	266074
984 RT	266057	266058	NA	NA		266075	266074
988 RT	266059	266060	266081	266080		266079	266078

XRT DUMMY ARMS FRoM

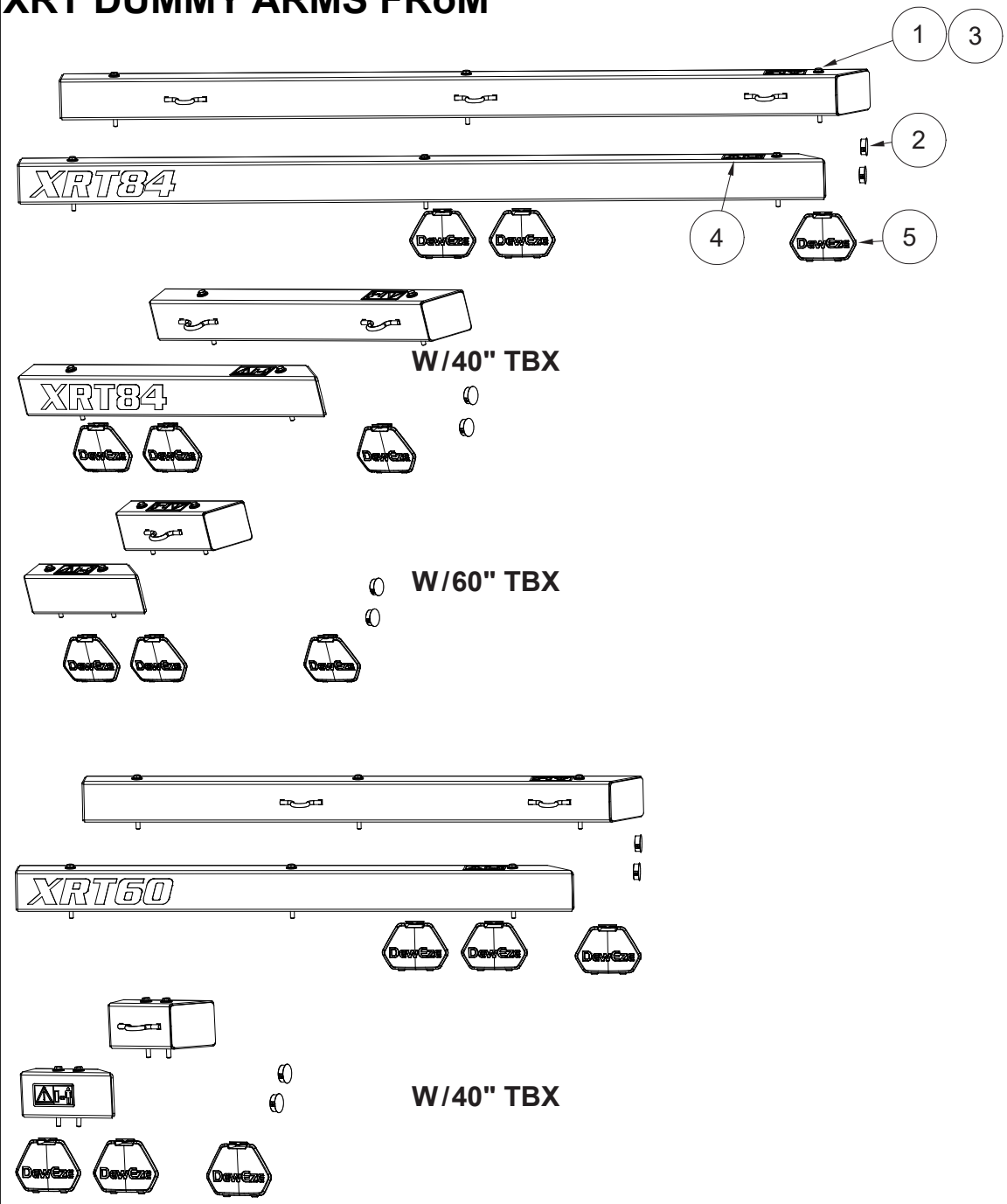

ITEM	PART #	DESCRIPTION
1	110676	Washer, 3/8" Flat Standard
2	111261	Plug, Plastic, 1.5 Thick Panel Dome
3	111268	Bolt, 3/8-16 X 5 Wiz Flange, Gr. 5 Zinc
4	202144	Decal, Safe Distance, Horizontal
5	202168	Cover, Fuel & Def

MODEL DECALS

ITEM	PART #	DESCRIPTION
XRT 60	202176	Decal
XRT 84	202177	Decal

BED MODELS	STANDARD No Upper TBX		SHORT RT ARM 60" Upper TBX		SHORT ARM 40" Upper TBX	
	Driver	Pass.	Driver	Pass.	Driver	Pass.
XRT 60	266085	266086	NA	NA	266083	266084
XRT 84	266088	266087	266090	266089	266092	266091

264136 REV: A

RT 800 CROSSTUBE & ARMS

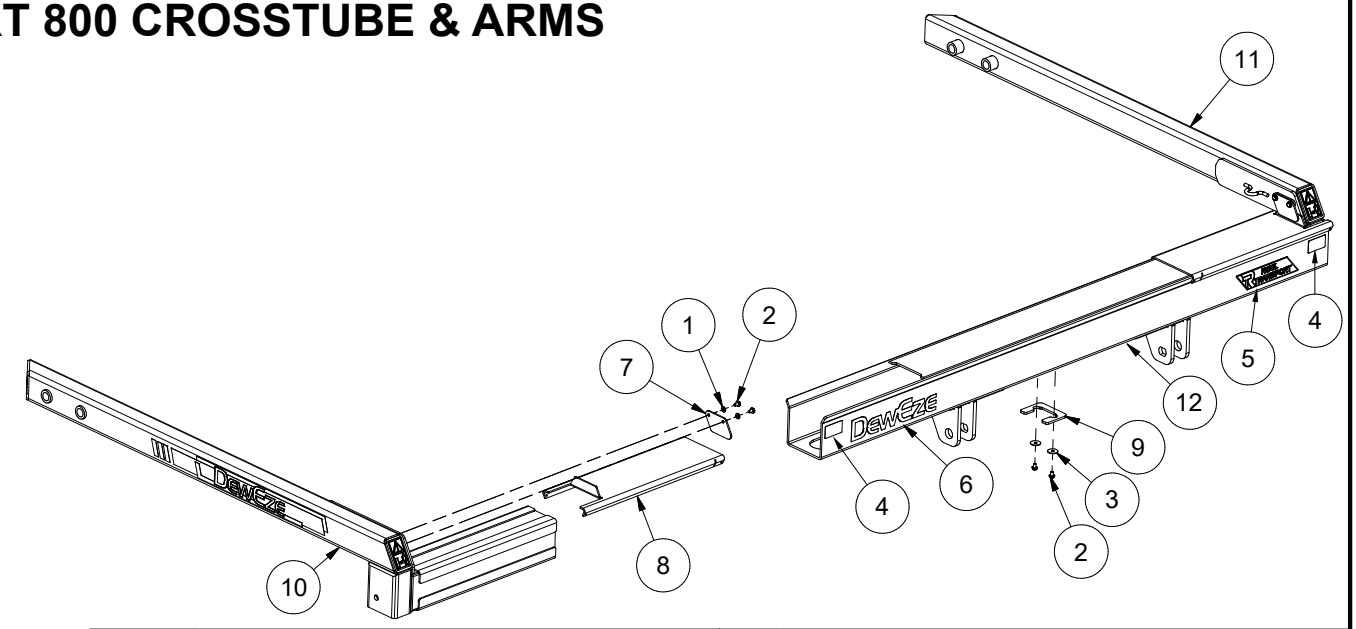

ITEM	QTY	PART #	DESCRIPTION	ITEM	QTY	PART #	DESCRIPTION
1	4	110069	Washer, 5/16" Flat Sae	7	2	261213	Plate
2	6	110426	Bolt, 5/16-18 X 0.5, Wiz Flange	8	2	261214	Shield, Crosstube
3	2	111155	Washer, 5/16 Flat, Large Dia. 1-1/4 Zinc	9	1	261384	Plate
4	2	200190	Decal, Red Reflector, Rectangle	10	1	266047	Kit, RT Arm, Left
5	1	202117	Decal, Rt (Reel Transport)	11	1	266048	Kit, RT Arm, Right
6	1	202175	Decal, Deweze	12	1	266049	Kit, Crosstube, RT 8--

264138 REV: A

RT 900 CROSSTUBE & ARMS

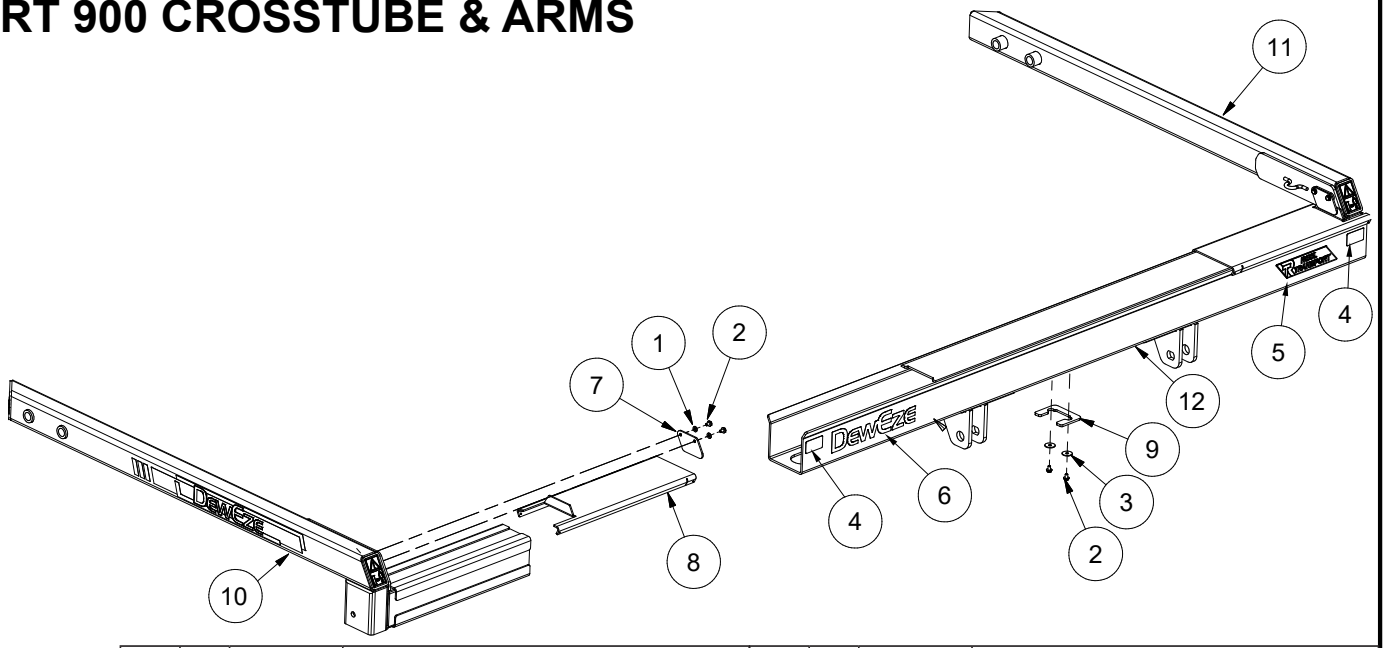

ITEM	QTY	PART #	DESCRIPTION	ITEM	QTY	PART #	DESCRIPTION
1	4	110069	Washer, 5/16" Flat Sae	7	2	261213	Plate
2	6	110426	Bolt, 5/16-18 X 0.5, Wiz Flange	8	2	261214	Shield, Crosstube
3	2	111155	Washer, 5/16 Flat, Large Dia. 1-1/4 Zinc	9	1	261384	Plate
4	2	200190	Decal, Red Reflector, Rectangle	10	1	266047	Kit, RT Arm, Left
5	1	202117	Decal, Rt (Reel Transport)	11	1	266048	Kit, RT Arm, Right
6	1	202175	Decal, Deweze	12	1	266050	Kit, Crosstube, RT 9--

RT 800/900 ARMS & DECALS

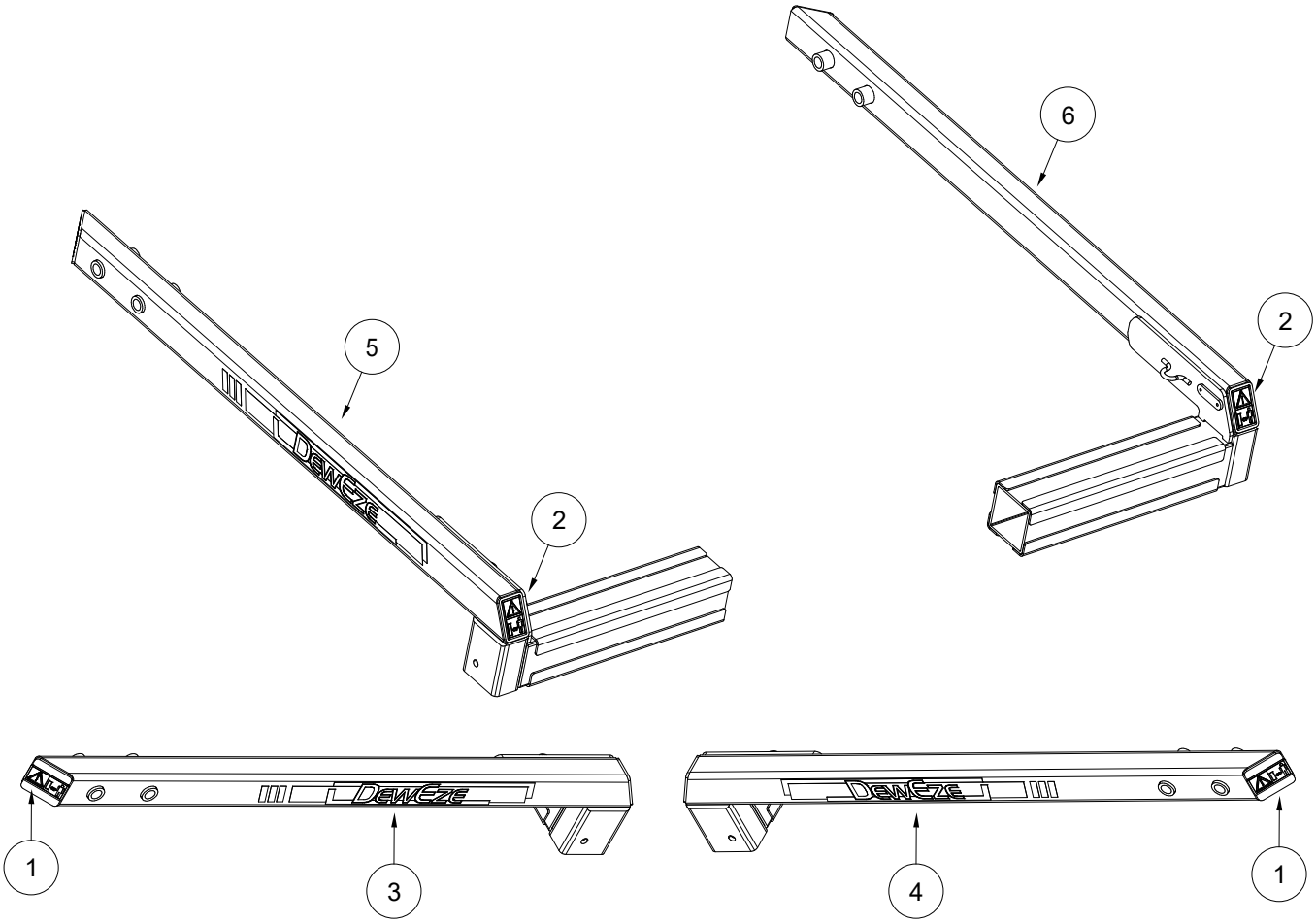

ITEM	QTY	PART #	DESCRIPTION
1	1	202144	Decal, Safe Distance, Horizontal
2	1	202145	Decal, Safe Distance, Vertical
3	1	202184	Decal, Arm, Left
4	1	202185	Decal, Arm, Right
5	1	266047	Rt Arm Left
6	1	266048	Rt Arm Right

XRT ARMS, CROSSTUBE & DECALS

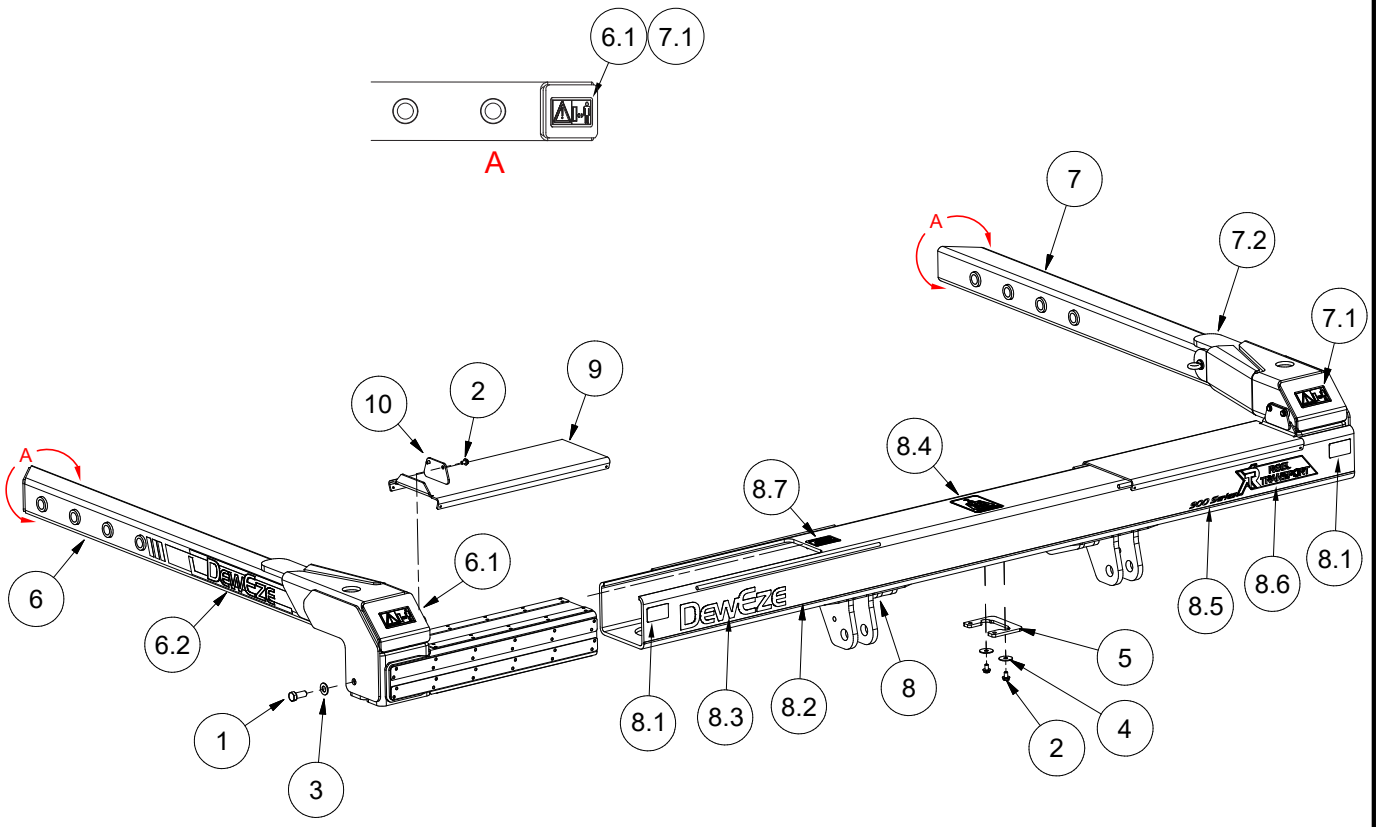

ITEM	QTY	PART #	DESCRIPTION
1	2	110365	Bolt, 5/8-18 X 1.5 Gr 5
2	6	110426	Bolt, 5/16-18 X 0.5, Wiz Flange
3	2	110663	Washer, 5/8" Flat Sae
4	2	111155	Washer, 5/16 Flat, Large Dia. 1-1/4 Zinc
5	1	261384	Plate
6	1	266061	Kit, XRT Arm, Left, Svc Prt
6.1	2	202144	Decal, Safe Distance (Horizontal)
6.2	1	202184	Decal, Arm, Left
7	1	266062	Kit, XRT Arm, Right, Svc Prt
7.1	2	202144	Decal, Safe Distance (Horizontal)
7.2	1	202185	Decal, Arm, Right
8	1	266082	Kit, XRT Crosstube
8.1	2	200190	Decal, Red Reflector, Rectangle
8.2	8ft	202093	Decal, Pin Stripe, -40 Warm Silver
8.3	1	202175	Decal, Deweze
8.4	1	202191	Decal, Max Weight
8.5	1	202193	Decal, 900 Series
8.6	1	223096	Decal, XRT Reel Transport
8.7	2	400014	Decal, Shield Removed
9	2	270102	Shield, XRT
10	2	270105	Shield Bracket

RT 800/900 SQUEEZE CYLINDER SSQ

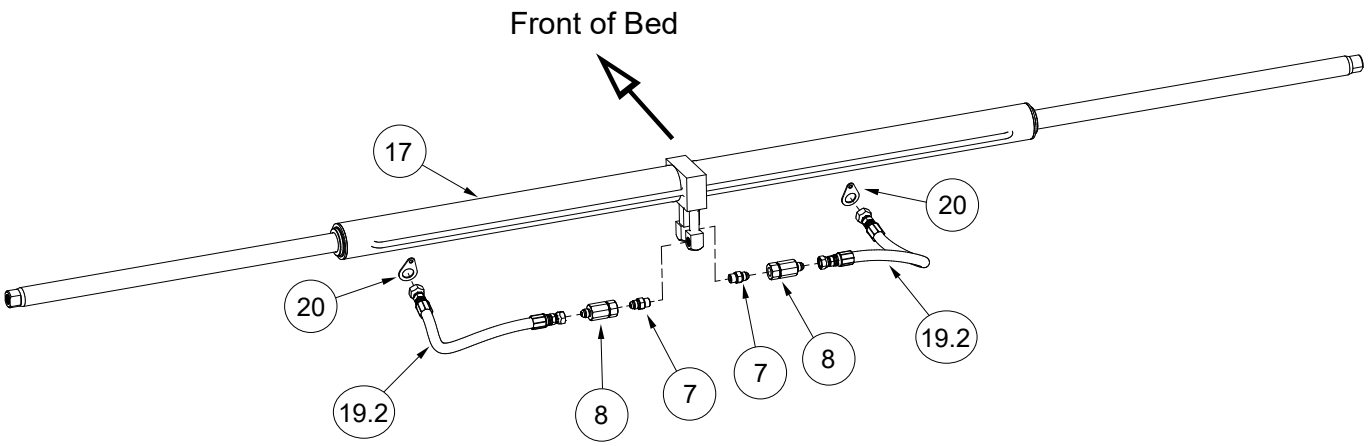

ITEM	QTY	PART #	DESCRIPTION
7	2	120319	Adapter, 6mj-6mb
8	2	120768	Adapter, 6fj-6mj Live Swivel
17	1	223110	Cylinder, Synchronized 2x39.25, Side Port
19.2	2	220855	Hose, .375 x 21.5, 6-6fjx/6-8fjx
20	2	260111	Mount, Hose Spring
	KIT	220056	Seal Kit, Squeeze Cylinder (Std/Sync)

RT 800/900 LIFT CYLINDERS & LINKAGE

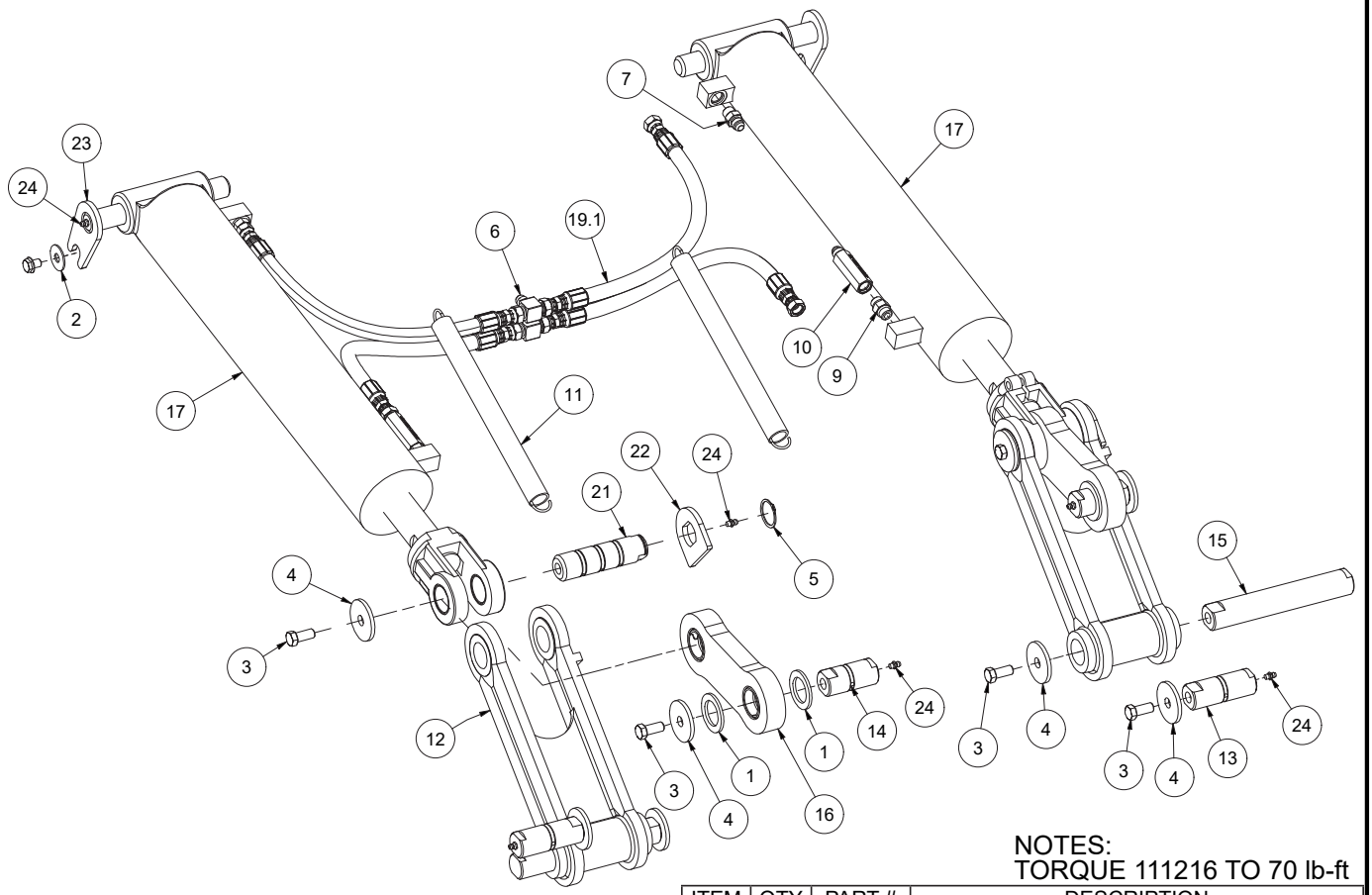

NOTES:
TORQUE 111216 TO 70 lb-ft

ITEM	QTY	PART #	DESCRIPTION
1	4	110336	Washer, 1-1/4" Flat Machine
2	2	110656	Washer, 3/8" Flat Special
3	8	111216	Bolt, 7/16-14 X 1, Gr8
4	8	111217	Washer, 7/16" X 2.0 X 0.187
5	2	111218	Snap Ring, 1.25"
6	2	120214	Adapter, 6mj-6mj-6mj
7	4	120319	Adapter, 6mj-6mb
8	2	120768	Adapter, 6fj-6mj Live Swivel
9	2	122038	Adapter, 6mb-6mb
10	2	122040	Adapter, Velocity 10gpm, 6mj-6fb
11	2	202022	Spring, 1" O.d. X 12" L X .105 Wire
12	2	210935	Idler Arm, Machine Dwg.
13	2	212066	Pin, Crosstube Pivot
14	2	212067	Pin, Linkage
15	2	212068	Pin, Linkage
16	2	214002	Push Arm Assy, Dual Lift
17	2	222129	Cylinder, Lift
18	1	223110	Cylinder, Synchronized 2x39.25, Side Port
19	1	223123	Hydraulic Hose Kit, Rt
19.1	4	220824	Hose, .375 X 17.0, 6fjx/6fjx
19.2	2	220855	Hose, .375 X 21.5, 6-6fjx/6-8fjx
20	2	260111	Mount, Hose Spring
21	2	261139	Pin
22	2	261140	Plate, Flag
23	2	265043	Weldment, Pin
24	8	510174	Grease Zerk, 1/4-28 St

PART #	DESCRIPTION
220835	Seal Kit, Lift Cylinder 222129

XRT SQUEEZE CYLINDER SSQ

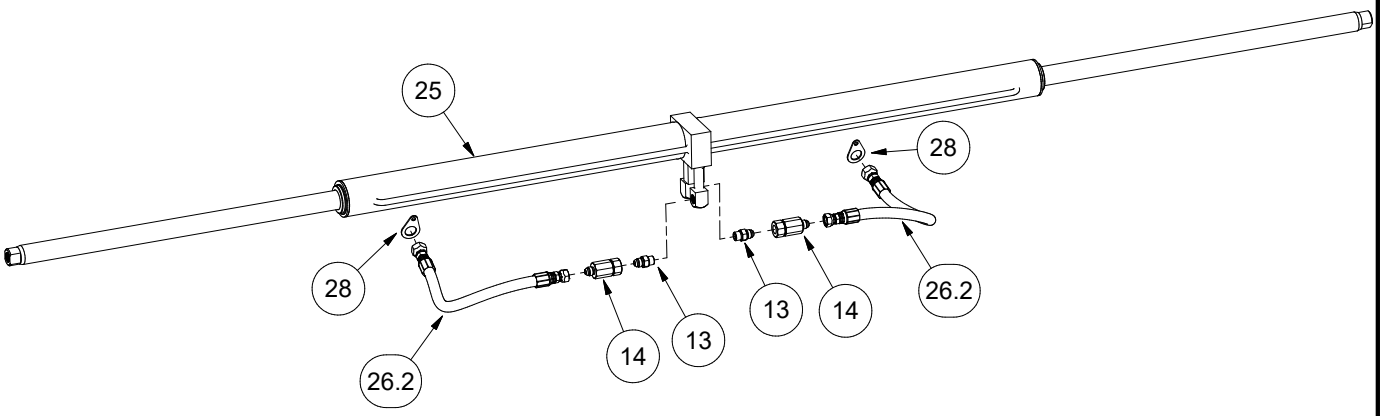

Parts List			
ITEM	QTY	PART #	DESCRIPTION
13	4	120319	Adapter, 6mj-6mb
14	2	120768	Adapter, 6fj-6mj Live Swivel
25	1	223110	Cylinder, Synchronized 2x39.25, Side Port
26.2	2	220855	Hose, .375 X 21.5, 6-6fjx/6-8fjx
28	2	260111	Mount, Hose Spring
	KIT	220056	Seal Kit, Squeeze Cylinder (Std/Sync)

XRT LIFT CYLINDERS & LINKAGE

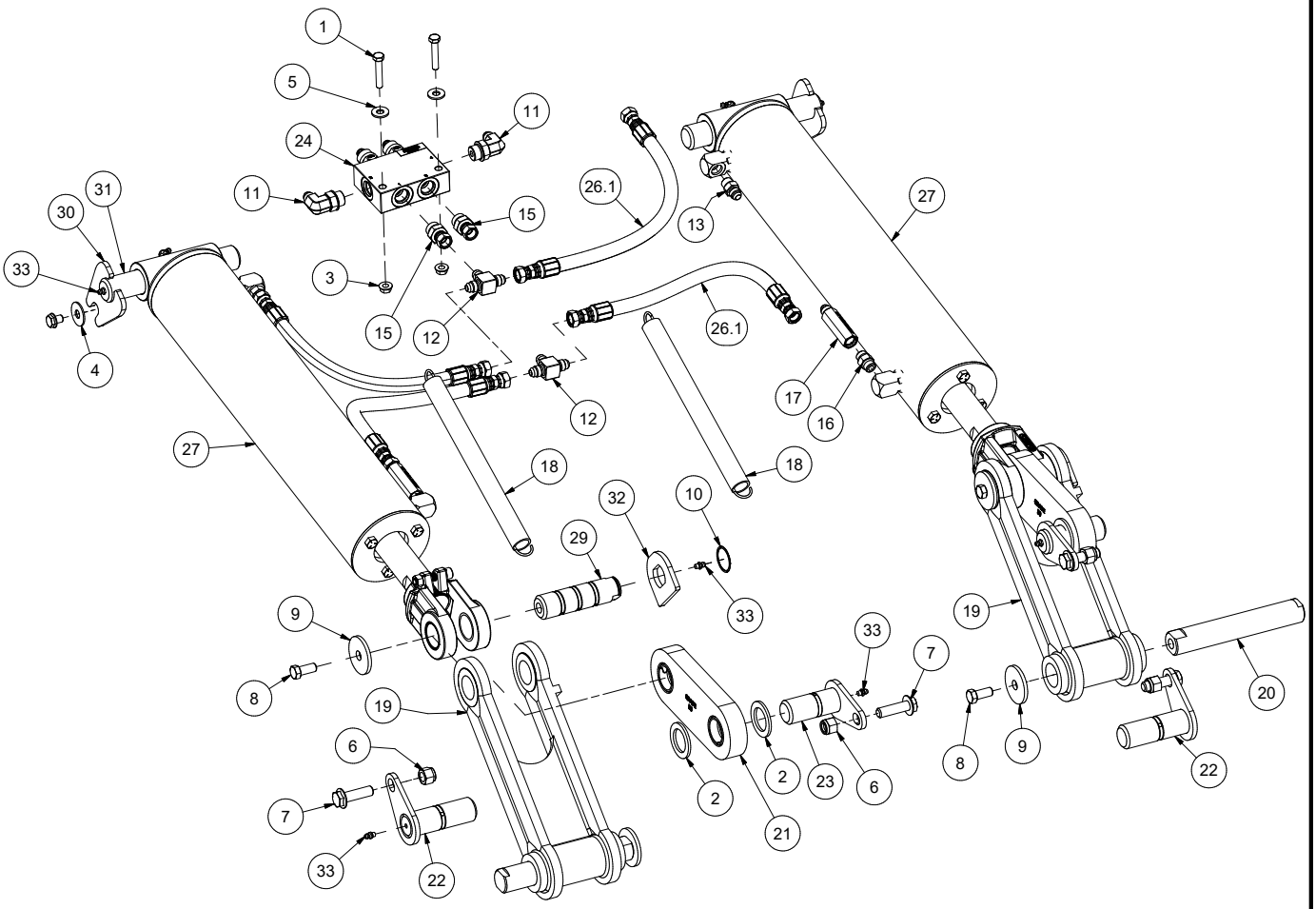

NOTES:
TORQUE 111216 TO 70 lb-ft

Parts List				Parts List			
ITEM	QTY	PART #	DESCRIPTION	ITEM	QTY	PART #	DESCRIPTION
1	2	110017	Bolt, 5/16-18 X 1.75	19	2	210935	Idler Arm, Machine Dwg.
2	4	110336	Washer, 1-1/4" Flat Machine	20	2	212068	Pin, Linkage
3	2	110606	Nut, 5/16-18 Wiz Flange	21	2	214012	Push Arm Assy, Xrt
4	2	110656	Washer, 3/8" Flat Special	22	2	215427	Weldment, Crosstube Hinge Pin, 1-1/4
5	2	110665	Washer, 5/16" Flat Standard	23	2	215428	Weldment, Crosstube Link Pin, 1-1/4
6	4	111034	Nut, 1/2-13 Lock Nylon	24	1	223093	Valve, Counter Balance, Cross Pilot
7	4	111209	Bolt, 1/2-13 X 1.75, Wiz Flange, Gr 8	25	1	223110	Cylinder, Synchronized 2x39.25, Side Port
8	4	111216	Bolt, 7/16-14 X 1, Gr8	26	1	223123	Hydraulic Hose Kit, Rt
9	4	111217	Washer, 7/16" X 2.0 X 0.187	26.2	2	220855	Hose, .375 X 21.5, 6-6fjx/6-8fjx
10	2	111276	Retaining Ring, External 1.25"	26.1	4	220824	Hose, .375 X 17.0, 6fjx/6fjx
11	2	120134	Adapter, 6mj-8mb90	27	2	223124	Cylinder, Lift, 4.0 X 16.62
12	2	120214	Adapter, 6mj-6mj-6mj	28	2	260111	Mount, Hose Spring
13	4	120319	Adapter, 6mj-6mb	29	2	261139	Pin
14	2	120768	Adapter, 6fj-6mj Live Swivel	30	2	261426	Plate, Flag
15	2	122036	Adapter, 6fjx 8mb	31	2	261427	Pin
16	2	122038	Adapter, 6mb-6mb	32	2	261433	Plate, Flag
17	2	122040	Adapter, Velocity 10gpm, 6mj-6fb	33	8	510174	Grease Zerk, 1/4-28 St
18	2	202022	Spring, 1" O.d. X 12" L X .105 Wire				

800 & 900 RT Hydraulic Schematic

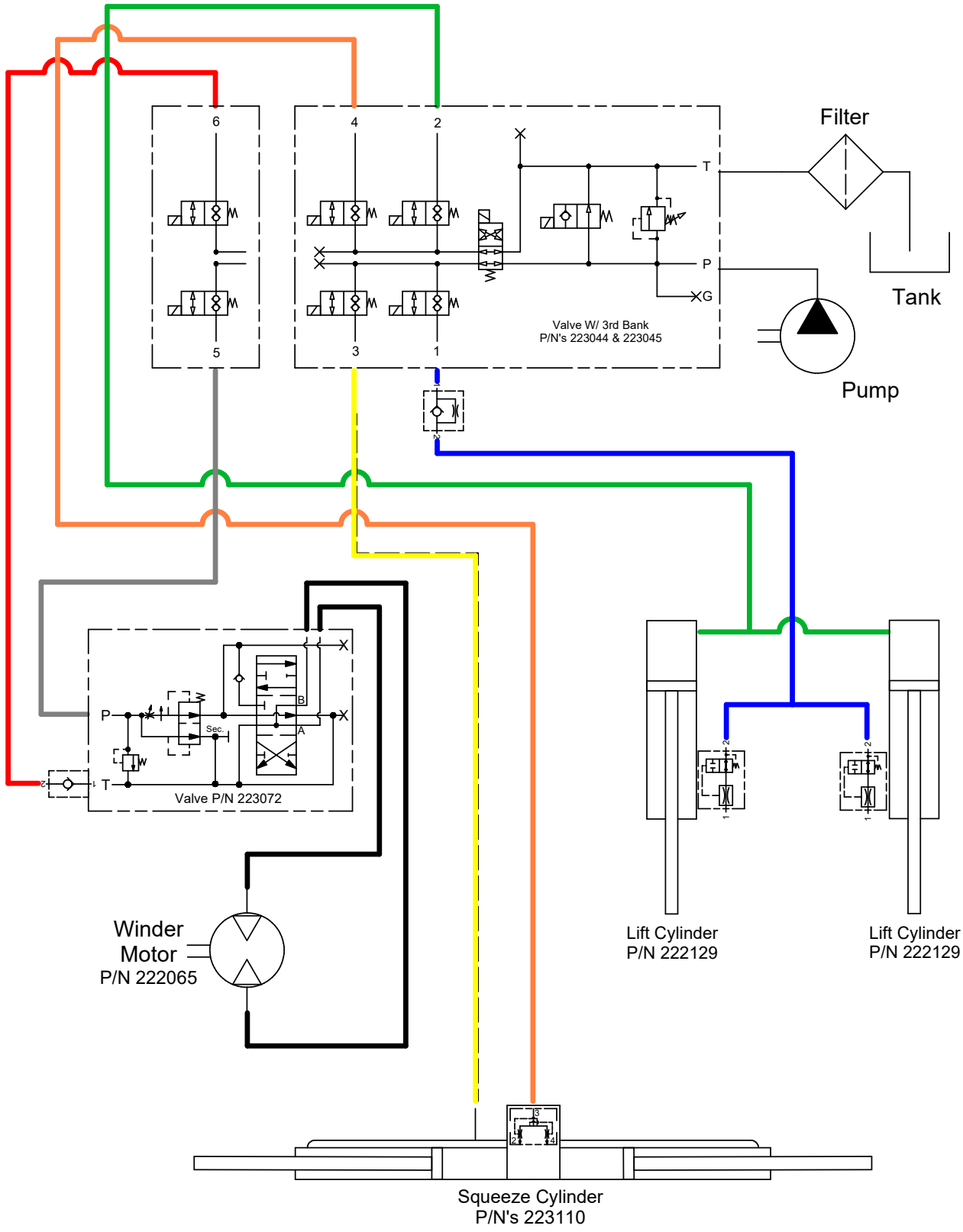

4/10/2026

RT LIFT & SQUEEZE HOSE ROUTING

LOAD & UNLOAD

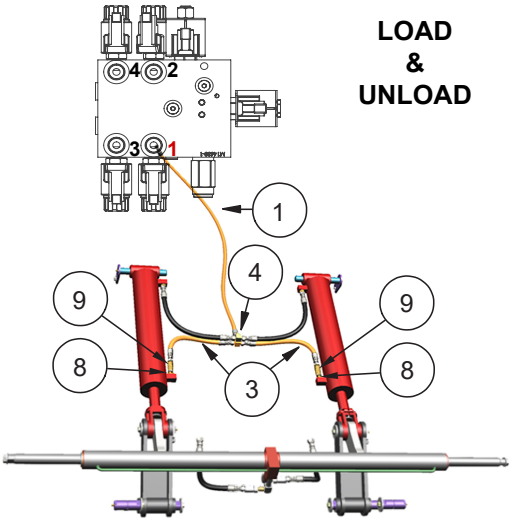

SQUEEZE & UNSQUEEZE

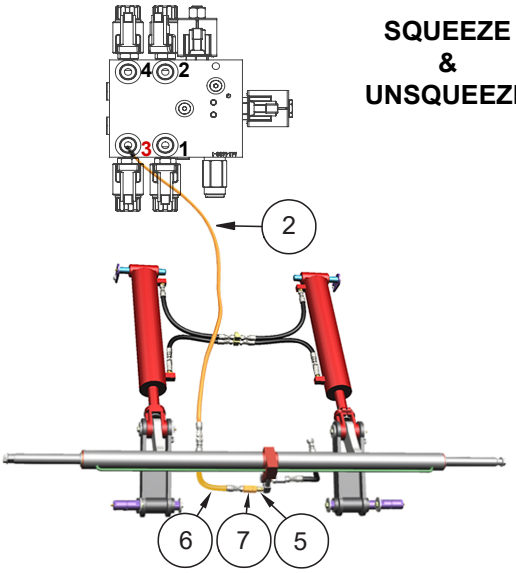

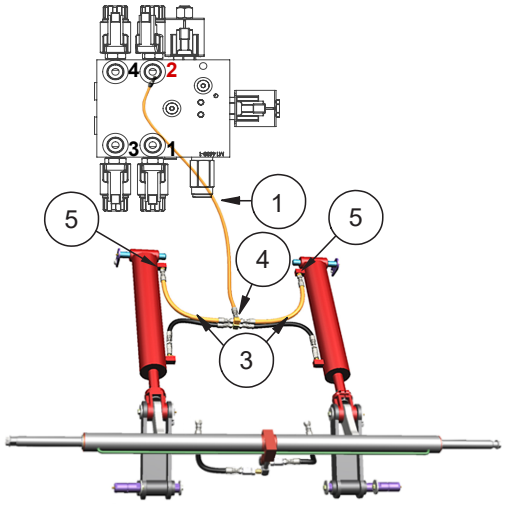

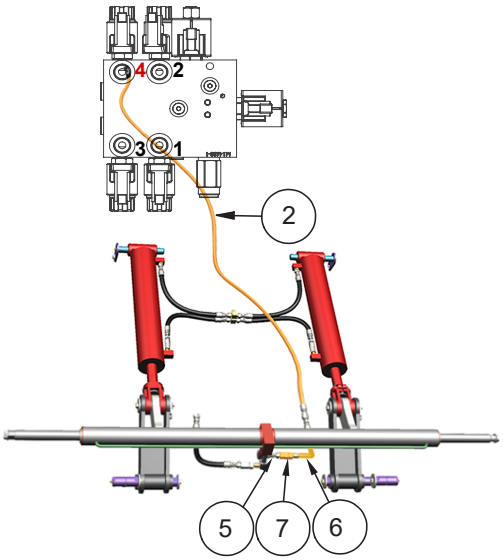

HOSES: Valve to Cylinder Area			
ITEM	QTY	**876, 879, 976, 984**	**988**
1	2	220826 (.375x112,6fjx/6fjx)	220839 (.375x137,6fjx/6fjx)
2	2	220825 (.375x138,6-6fjx/6-8mj)	220840 (.375x158,6-6fjx/6-8mj)

Common Parts			
ITEM	QTY	PART #	DESCRIPTION
3	4	220824	.375x17, 6fjx/6fjx
4	2	120214	Adapter 6mj-6mj-6mj
5	4	120319	Adapter, 6mj-6mb
6	2	220855	.375X21.5, 6-6fjx/6-8fjx
7	2	120768	Adapter Live Swivel, 6fj-6mj
8	2	122038	Adapter, 6mb-6mb
9	2	122040	Adapter, Velocity 10gpm, 6mj-6fb

Kits & Assemblies		
223101	2x (1) & (2)	**876, 879, 976, 984**
223112	2x (1) & (2)	**988**
223123	4x (3), 2x (6)	**All Models**

RT 3RD BANK ROUTING

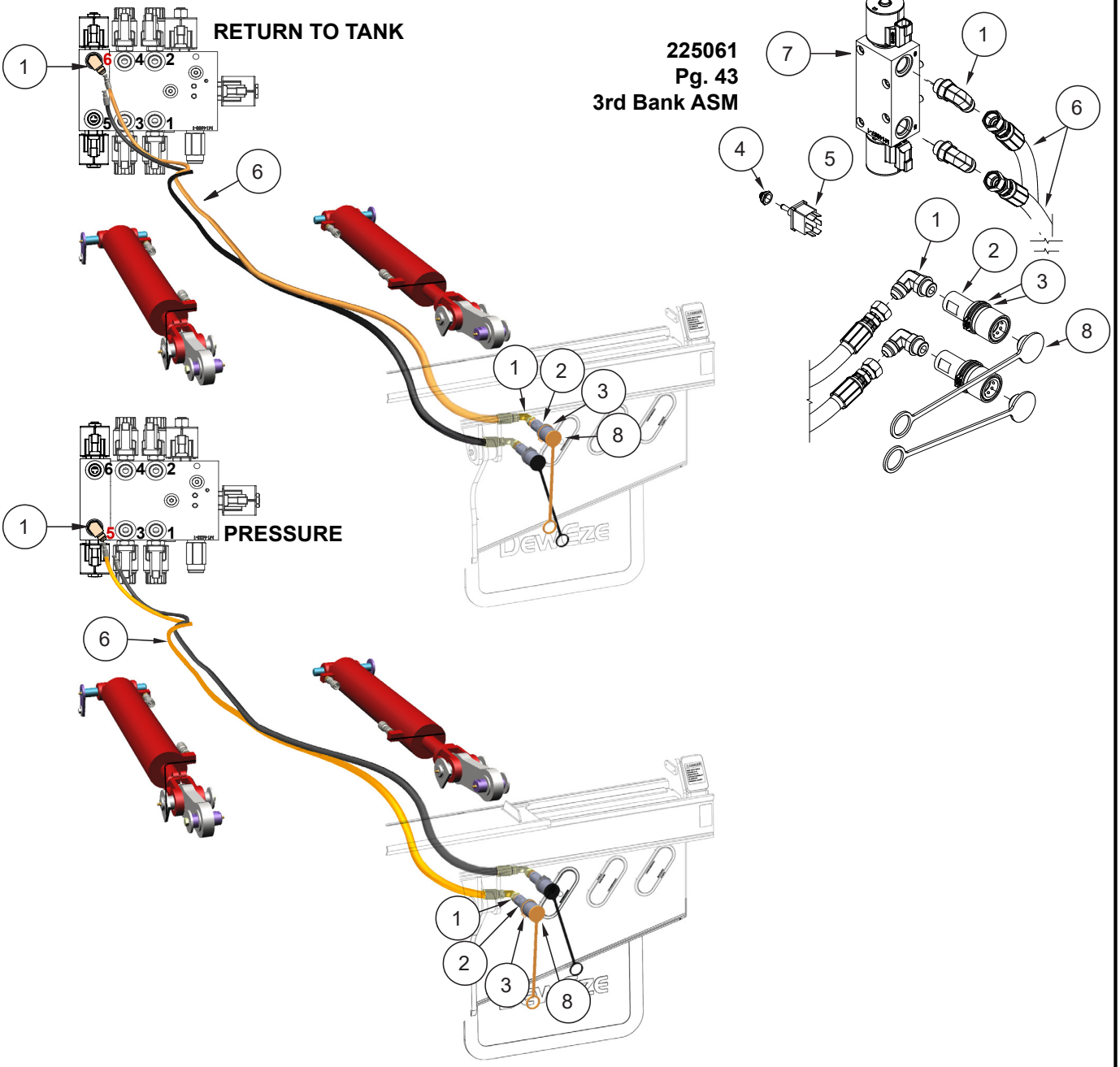

PARTS LIST			
ITEM	QTY	PART #	DESCRIPTION
	Kit	225061	RT 3rd Bank Valve Kit
1	4	120288	Adapter, 8mj-8mb90
2	2	120581	Coupler, Pioneer Female, Orb
3	4	120583	Snap Ring, Orb Pioneer Coupler
4	1	132035	Switch Boot
5	1	132134	Switch, Toggle, Dpdt, On-Off-On
6	2	220697	Hose, .50 X 183.00, 8-8fjx
7	1	223045	Valve, 3rd Bank Add On (223044)
8	2	420051	Dust Plug, Pioneer Coupler

RT 3RD BANK ROUTING WITH WINDER

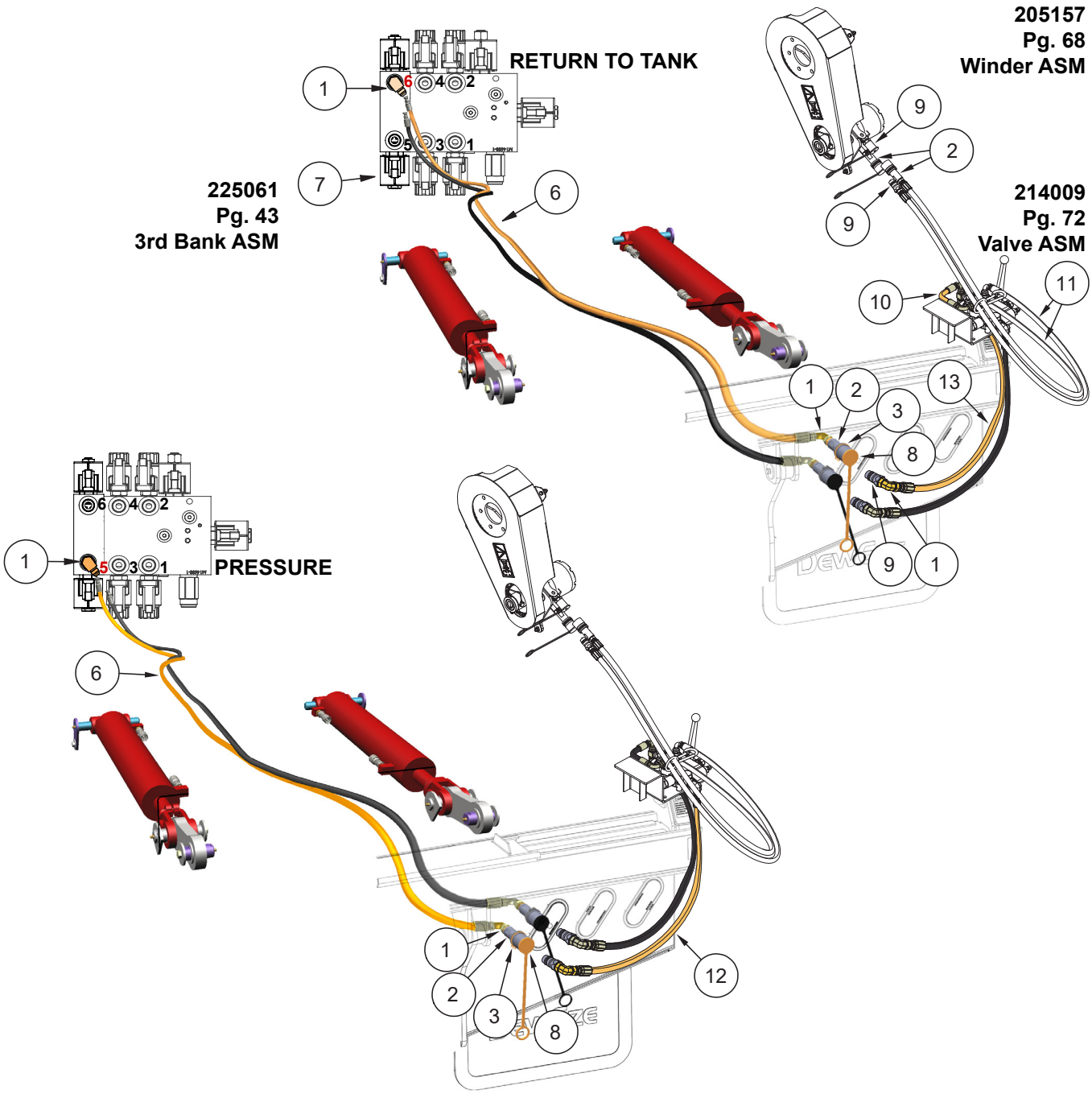

PARTS LIST				PARTS LIST			
ITEM	QTY	PART #	INCLUDED IN 3RD BANK KIT	ITEM	QTY	PART #	ITEMS FROM OTHER ASSEMBLIES
	Kit	225061	RT 3rd Bank Valve Kit	9	4	120582	Coupler, Pioneer Male, ORB
1	4	120288	Adapter, 8mj-8mb90	10	1	220746	Hose, .50 x 10.0 8fjx90/8fjx90
2	2	120581	Coupler, Pioneer Female, Orb	11	2	220747	Hose, .50 x 99.0 8fjx90/8mb
3	4	120583	Snap Ring, Orb Pioneer Coupler	12	1	220748	Hose, .50 x 41.0 8fjx/8fjx
4	1	132035	Switch Boot	13	1	220749	Hose, .50 x 46.0 8fjx/8fjx90
5	1	132134	Switch, Toggle, Dpdt, On-Off-On				
6	2	220697	Hose, .50 X 183.00, 8-8fjx				
7	1	223045	Valve, 3rd Bank Add On (223044)				
8	2	420051	Dust Plug, Pioneer Coupler				

900 Series XRT Hydraulic Schematic

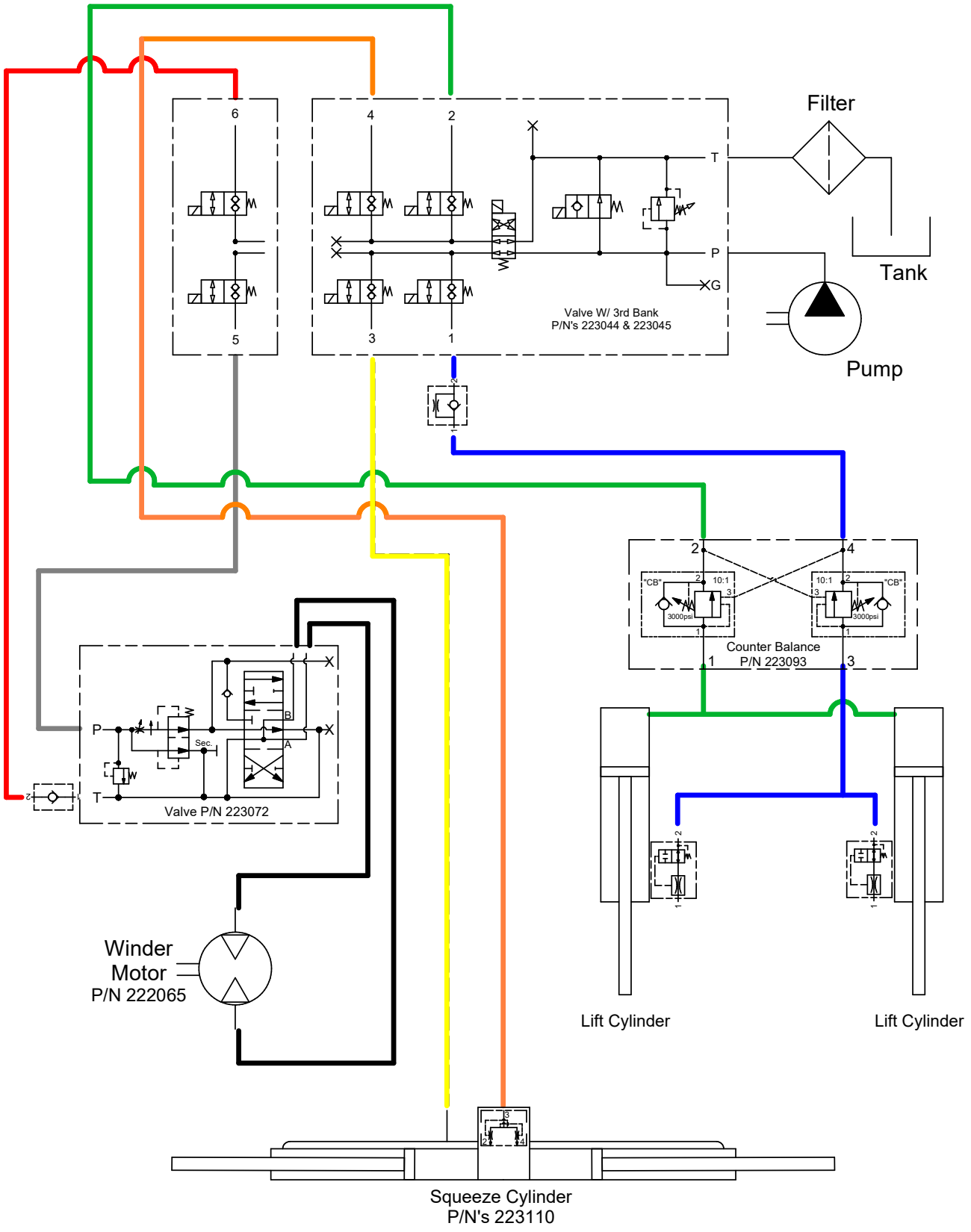

XRT LIFT & SQUEEZE HOSE ROUTING

LOAD & UNLOAD

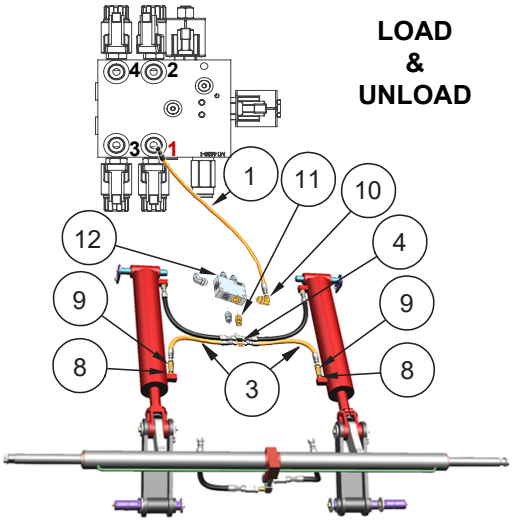

SQUEEZE & UNSQUEEZE

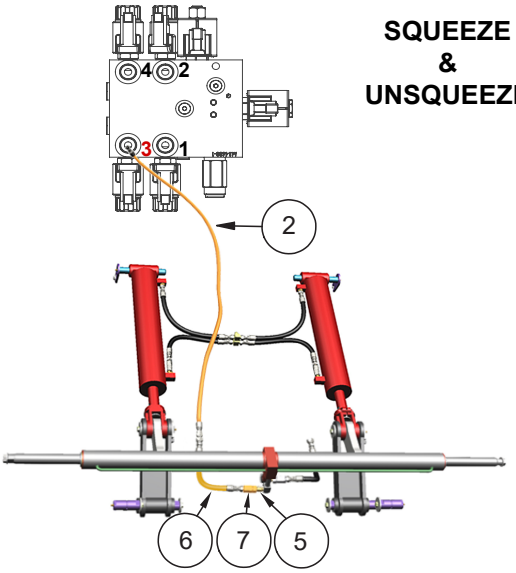

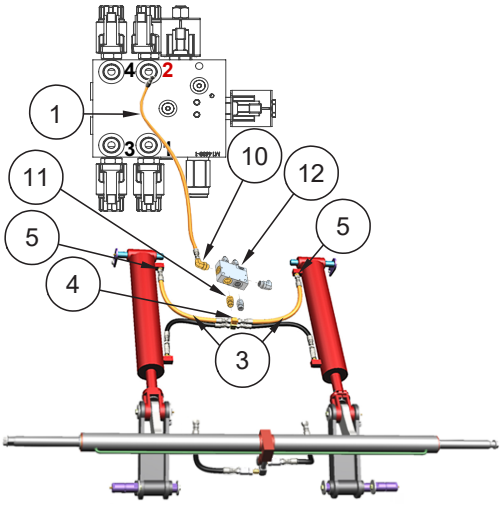

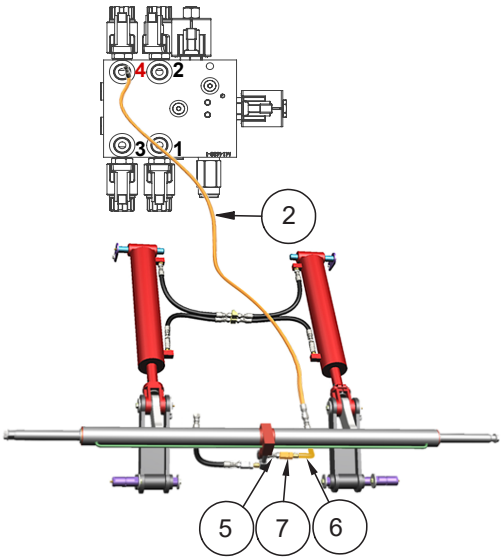

HOSES: Valve to Cylinder Area			
ITEM	QTY	**XRT 60**	**XRT 84**
1	2	220826 (.375x112,6fjx/6fjx)	220839 (.375x137,6fjx/6fjx)
2	2	220825 (.375x138,6-6fjx/6-8mj)	220840 (.375x158,6-6fjx/6-8mj)

Common Parts			
ITEM	QTY	PART #	DESCRIPTION
3	4	220824	.375x17, 6fjx/6fjx
4	2	120214	Adapter 6mj-6mj-6mj
5	4	120319	Adapter, 6mj-6mb
6	2	220855	.375X21.5, 6-6fjx/6-8fjx
7	2	120768	Adapter Live Swivel, 6fj-6mj
8	2	122038	Adapter, 6mb-6mb
9	2	122040	Adapter, Velocity 10gpm, 6mj-6fb
10	2	120134	Adapter, 6mj-8mb90
11	2	122036	Adapter, 6fjx 8mb
12	1	223093	Valve, Counter Balance, Cross Pilot

Kits & Assemblies		
223101	2x (1) & (2)	**XRT 60**
223112	2x (1) & (2)	**XRT 84**
223123	4x (3), 2x (6)	**All Models**

XRT 3RD BANK ROUTING WITH WINDER (PSS MNT)

XRT WINDER
205487
Pg. 69

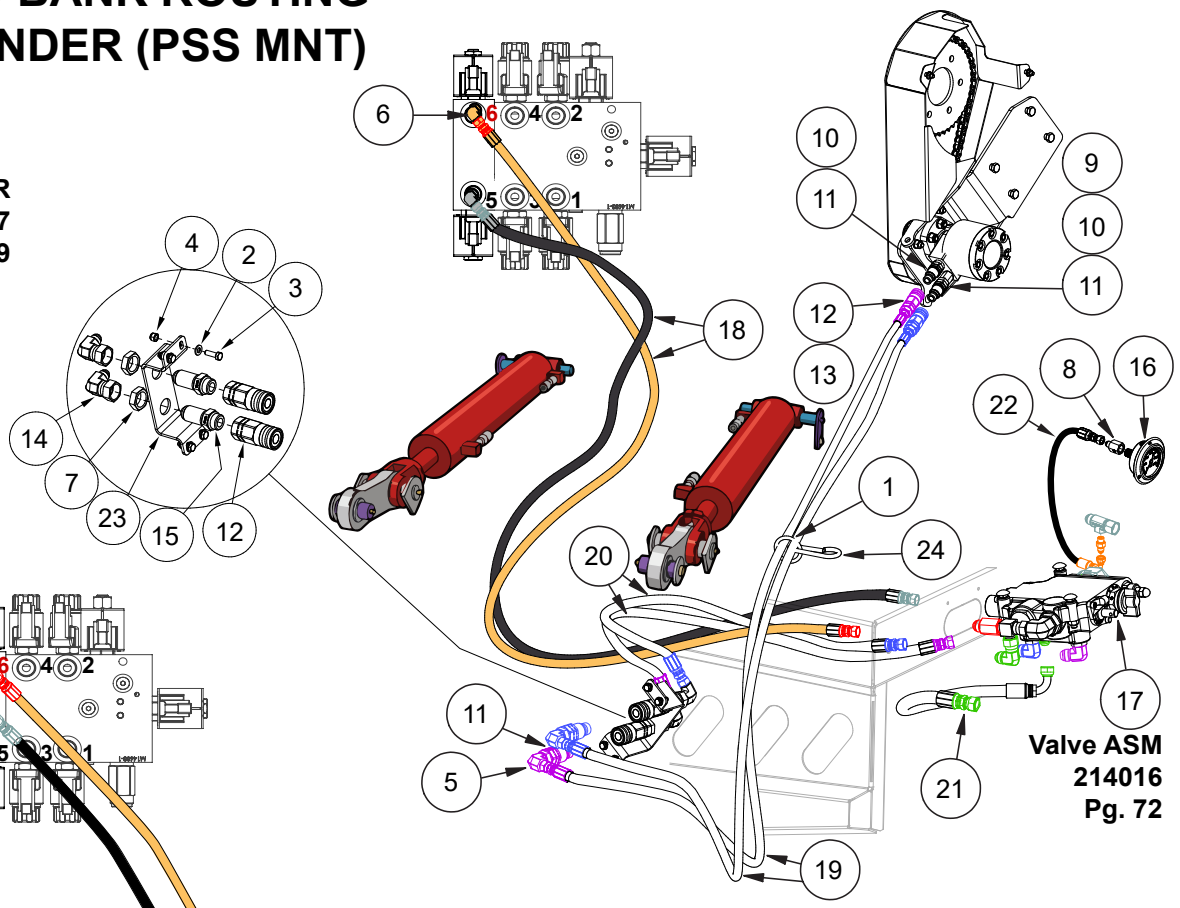

Valve ASM
214016
Pg. 72

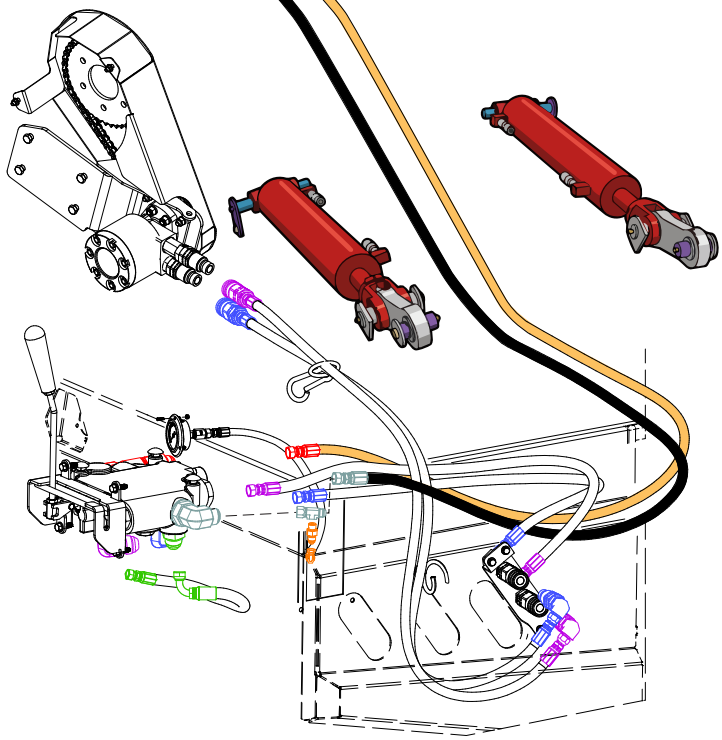

XRT 3RD BANK ROUTING WITH WINDER (DRV MNT)

PARTS LIST			
ITEM	QTY	PART #	DESCRIPTION
1	1	102128	Ring, 2"ID X .312, Zinc, Not For Lifting
2	4	110069	Washer, 5/16" Flat SAE
3	4	110423	Bolt, 5/16-18 x 1.0
4	4	110603	Nut, 5/16-18 Lock (Nylon)
5	2	120246	Adapter, 8mj-12mb90
6	2	120288	Adapter, 8mj-8mb90
7	2	120495	Nut, Lock, Bulkhead, -12
8	1	120704	Adapter, 4mj-4fp
9	1	120738	Adapter, 10mb-10fb, Extender
10	2	120775	Adapter, 12mb-10mb
11	2	120776	Coupler, Male Flat Face -12 FB
12	4	120777	Coupler, Female Flat Face -12 FB
13	2	120778	Adapter, 12mb-8fb
14	2	120779	Adapter, 8mj-12fjx 90
15	2	120780	Adapter,12mj-12mb Bulkhead
16	1	120781	Gauge, Pressure, 2.5", 3000psi, Flng Mnt
17	1	214016	Assembly, Valve, XRT Winder
18	2	220269	Hose .37 X 128.78 6-8mp/6-8mp
19	2	220831	Hose, .50X81.0 8fjx/8mb
20	2	220832	Hose, .50X37.0 8fjx/8fjx
21	1	220856	Hose, .50X15.0, 8fjx/8fjx90s
22	1	220857	Hose, .25X22.0, 4fjx/4fjx90m
23	1	261425	Bracket, Mounting, FF Coupler
24	1	902208	Carabiner, 3/8", Zinc

800/900 HYDRAULIC VALVE & 3RD BANK

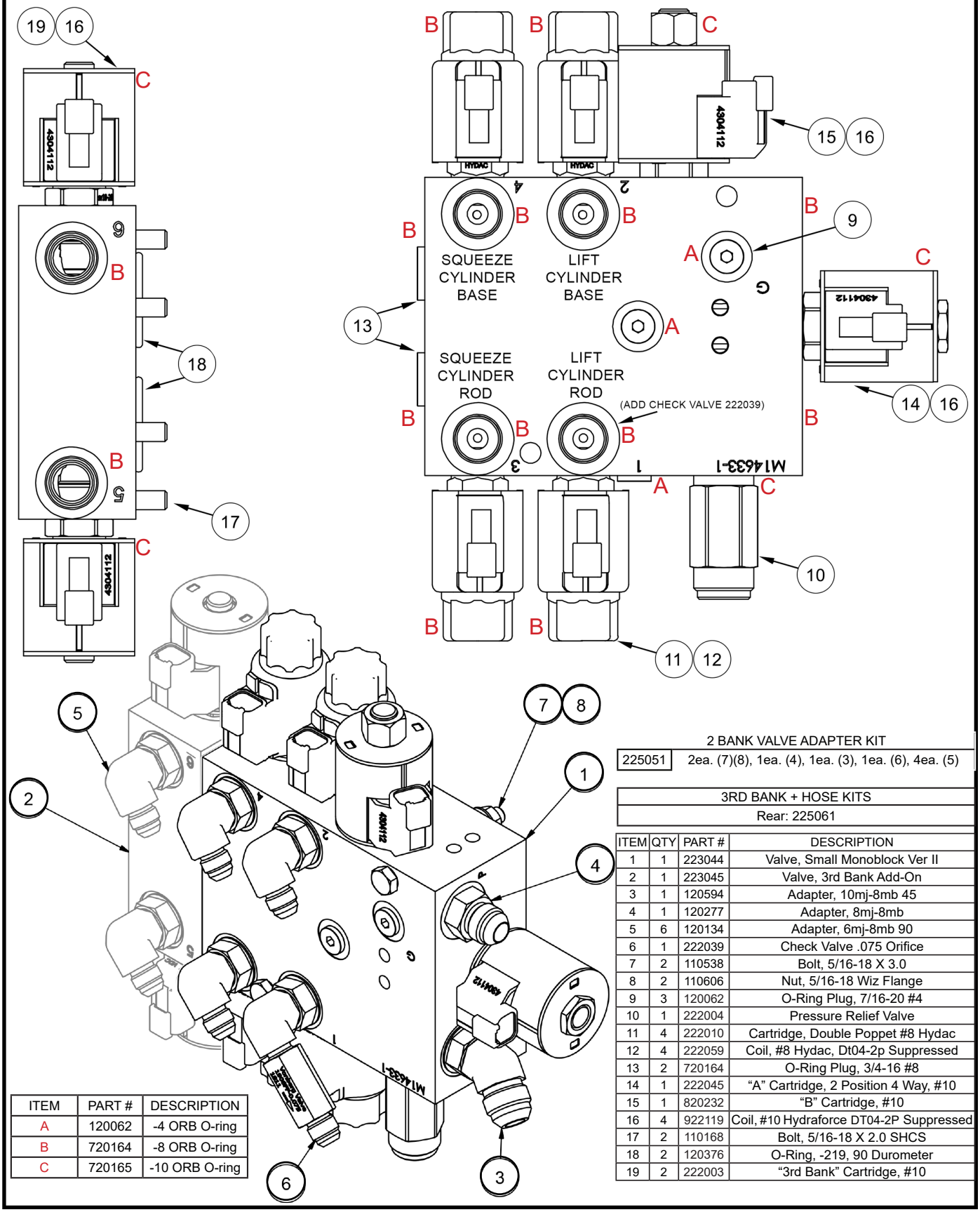

ITEM	PART #	DESCRIPTION
A	120062	-4 ORB O-ring
B	720164	-8 ORB O-ring
C	720165	-10 ORB O-ring

2 BANK VALVE ADAPTER KIT

225051	2ea. (7)(8), 1ea. (4), 1ea. (3), 1ea. (6), 4ea. (5)

3RD BANK + HOSE KITS

Rear: 225061

ITEM	QTY	PART #	DESCRIPTION
1	1	223044	Valve, Small Monoblock Ver II
2	1	223045	Valve, 3rd Bank Add-On
3	1	120594	Adapter, 10mj-8mb 45
4	1	120277	Adapter, 8mj-8mb
5	6	120134	Adapter, 6mj-8mb 90
6	1	222039	Check Valve .075 Orifice
7	2	110538	Bolt, 5/16-18 X 3.0
8	2	110606	Nut, 5/16-18 Wiz Flange
9	3	120062	O-Ring Plug, 7/16-20 #4
10	1	222004	Pressure Relief Valve
11	4	222010	Cartridge, Double Poppet #8 Hydac
12	4	222059	Coil, #8 Hydac, Dt04-2p Suppressed
13	2	720164	O-Ring Plug, 3/4-16 #8
14	1	222045	“A” Cartridge, 2 Position 4 Way, #10
15	1	820232	“B” Cartridge, #10
16	4	922119	Coil, #10 Hydraforce DT04-2P Suppressed
17	2	110168	Bolt, 5/16-18 X 2.0 SHCS
18	2	120376	O-Ring, -219, 90 Durometer
19	2	222003	“3rd Bank” Cartridge, #10

RT & XRT VALVE KIT, NON-PROPORTIONAL 2 BANK

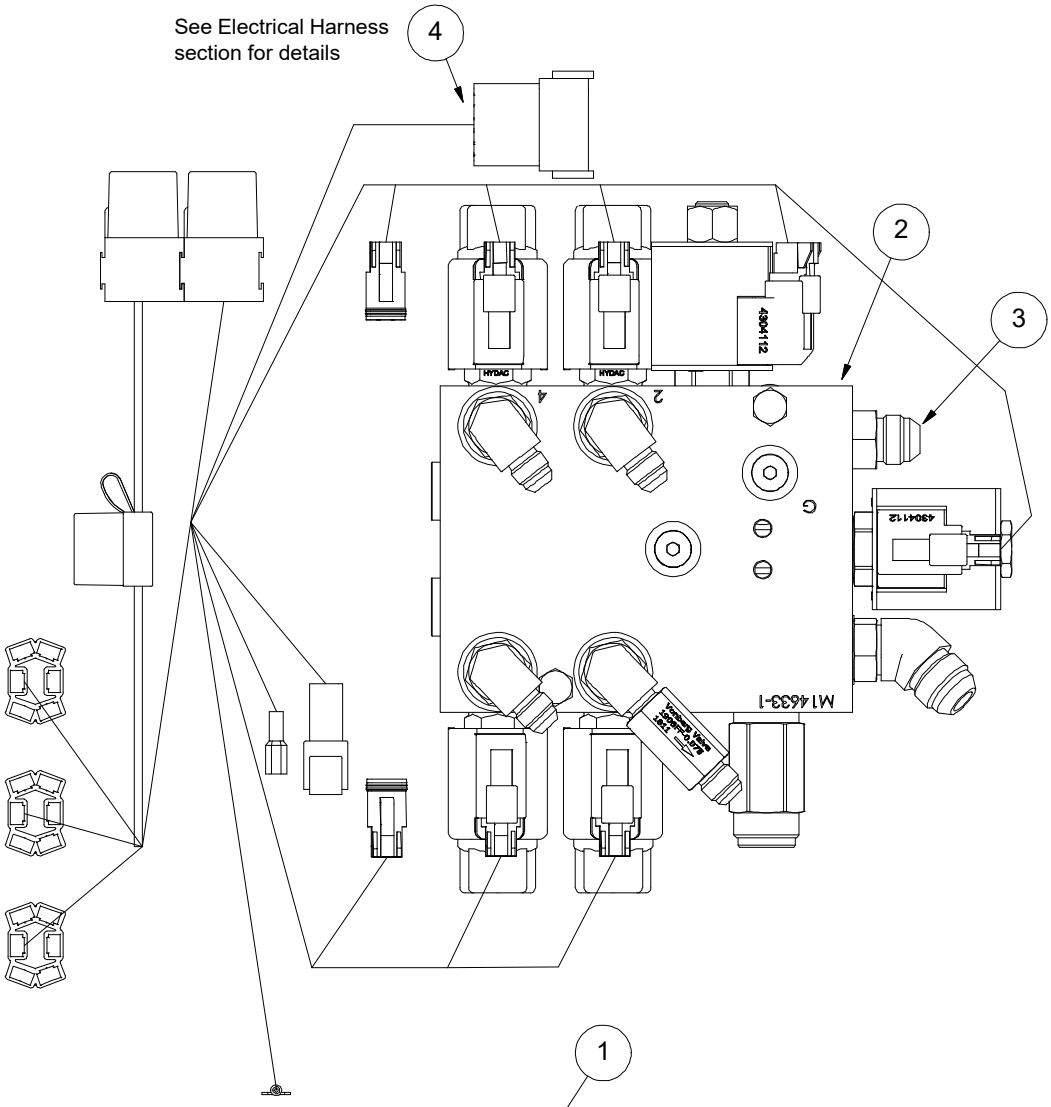

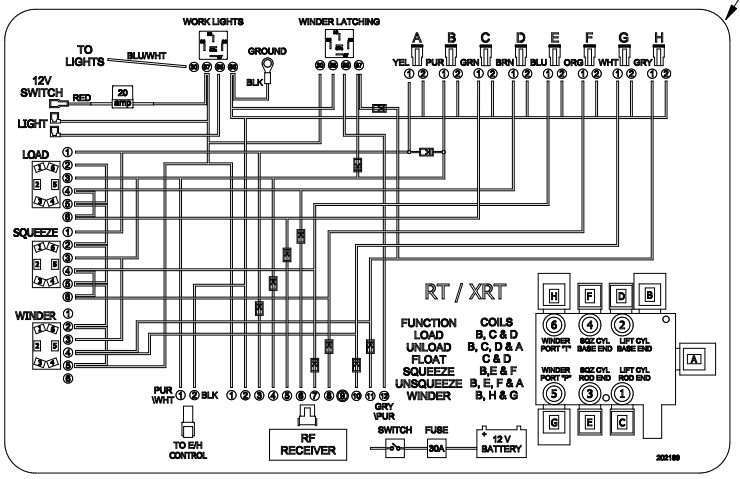

Parts List			Kit: 225060
ITEM	QTY	PART #	DESCRIPTION
1	1	202189	Decal, Wiring Diagram, RT/XRT Valve
2	1	223044	Flatbed Valve, Small, Monoblock Ver II
3	1	225051	Adapter Kit, Non-Proportional 2 Bank
4	1	232244	Harness, RT/XRT Valve

RT VALVE KIT, 3RD BANK W/REAR COUPLERS

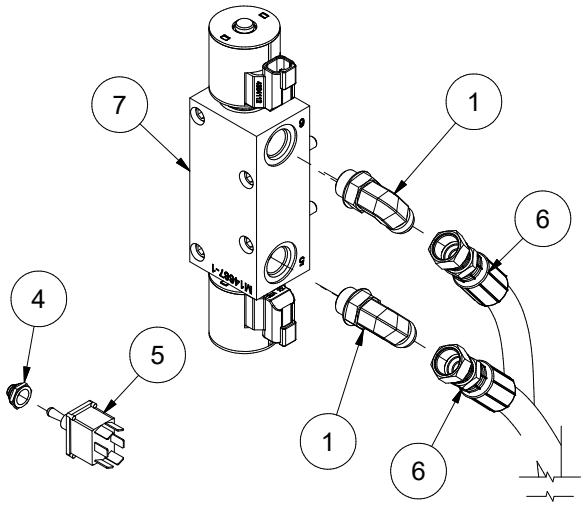

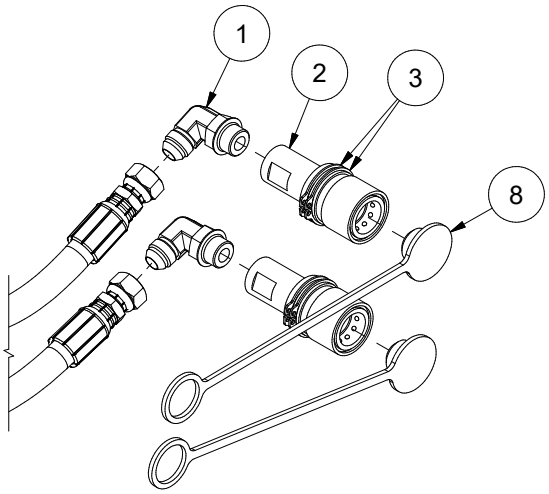

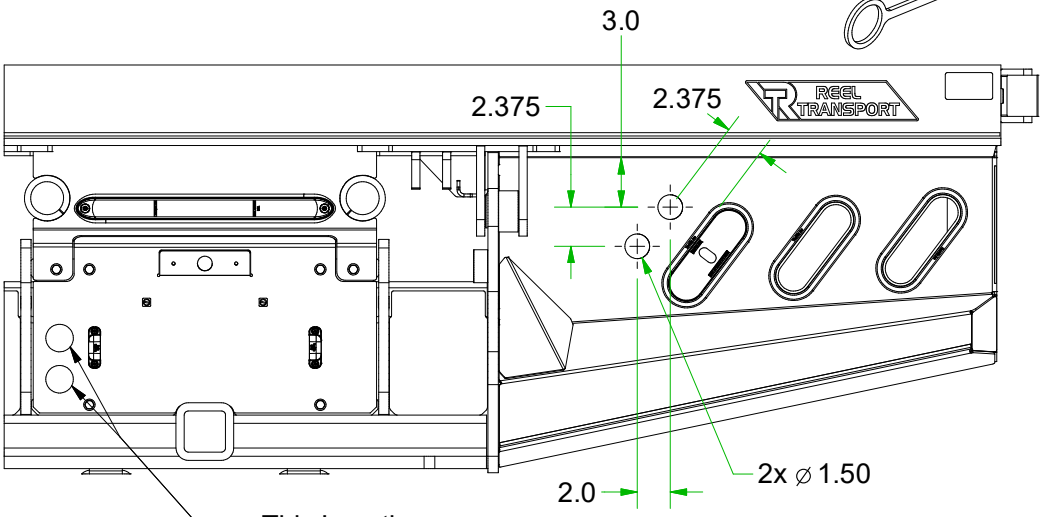

Parts List			
ITEM	QTY	PART #	DESCRIPTION
1	4	120288	Adapter, 8mj-8mb90
2	2	120581	Coupler, Pioneer Female, Orb
3	4	120583	Snap Ring, Orb Pioneer Coupler
4	1	132035	Switch Boot
5	1	132134	Switch, Toggle, Dpdt, On-Off-On
6	2	220697	Hose, .50 X 183.00, 8-8fjx
7	1	223045	Valve, 3rd Bank Add On (223044)
8	2	420051	Dust Plug, Pioneer Coupler

HYDRAULIC RESERVOIR & FILTER

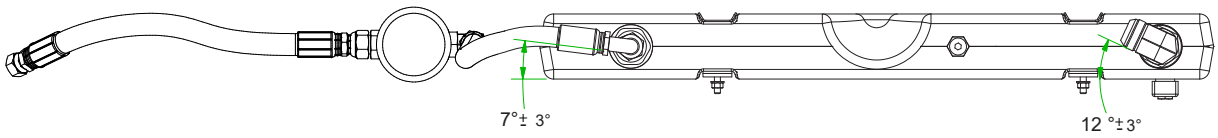

REF. Reservoir Assembly page for further parts breakdown. 223099_

If converting from *outdated* 3-part filter to *current* spin-on filter/filter head, use the new fitler head as a template to drill a hole in the mounting bracket.

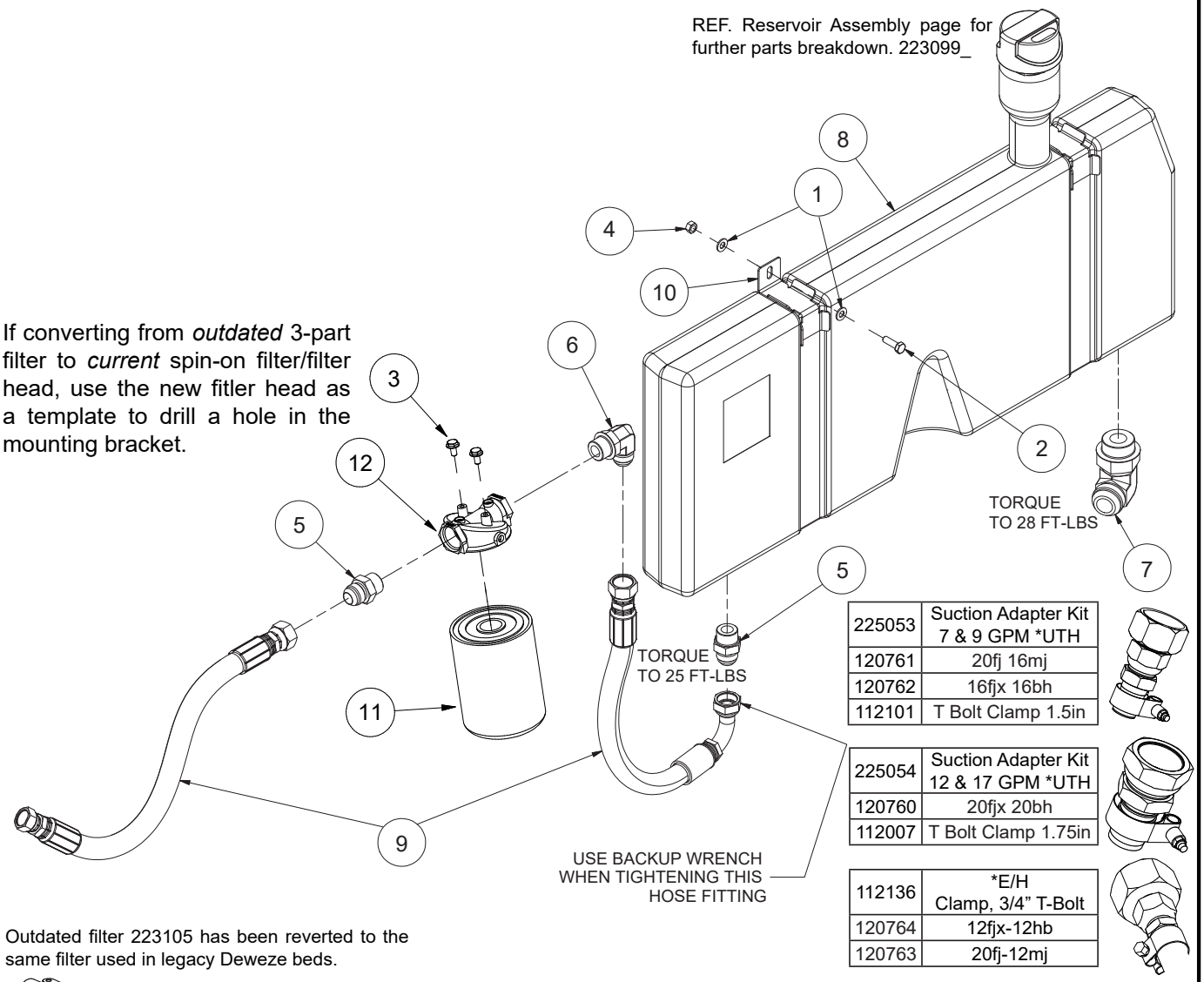

225053	Suction Adapter Kit 7 & 9 GPM *UTH
120761	20fj 16mj
120762	16fjx 16bh
112101	T Bolt Clamp 1.5in

225054	Suction Adapter Kit 12 & 17 GPM *UTH
120760	20fjx 20bh
112007	T Bolt Clamp 1.75in

112136	*E/H Clamp, 3/4" T-Bolt
120764	12fjx-12hb
120763	20fj-12mj

Outdated filter 223105 has been reverted to the same filter used in legacy Deweze beds.

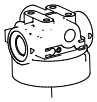

222121 Outdated Filter Head

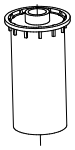

222119 Outdated Filter Element

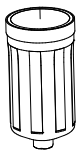

222120 Outdated Filter Housing

ITEM	QTY	PART #	DESCRIPTION
1	4	110069	Washer, 5/16" Flat Sae
2	2	110423	Bolt, 5/16-18 X 1.0
3	2	110434	Bolt, 1/4-20 X 0.5, Wiz Flange
4	2	110608	Nut, 5/16-18
5	2	120254	Adapter, 12mj-12mb
6	1	120257	Adapter, 12mj-12mb90
7	1	120404	Adapter, 20mj-20mb90
8	1	223099	Reservoir Assembly, Hydraulic
9	1	223108	Kit, Hydraulic Hoses, Return
10	2	261310	Bracket, Hyd Tank Mount
11	1	720043	Filter, 10 Micron
12	1	122034	Head, Spin-On Filter, -12sae

800/900 RESERVOIR ASSEMBLY

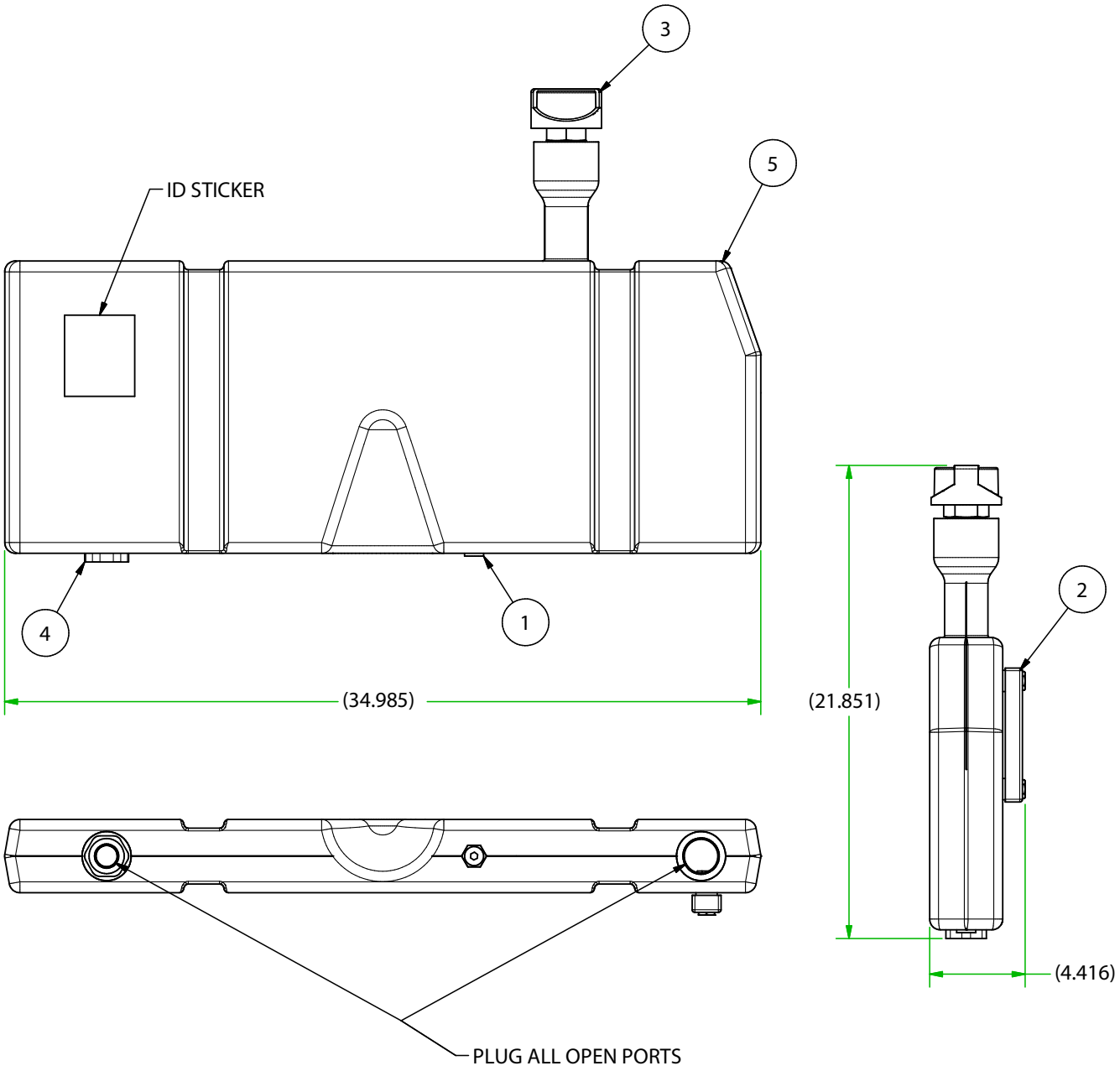

Parts List			Kit: 223099
ITEM	QTY	PART #	DESCRIPTION
1	1	120526	Plug, 8mb, Internal Hex Head
2	1	222115	Sight Glass
3	1	222116	Cap, Breather
4	1	222117	Diffuser
5	1	222118	Reservoir, Hydraulic, Service

800/900 VALVE SWITCHES KIT

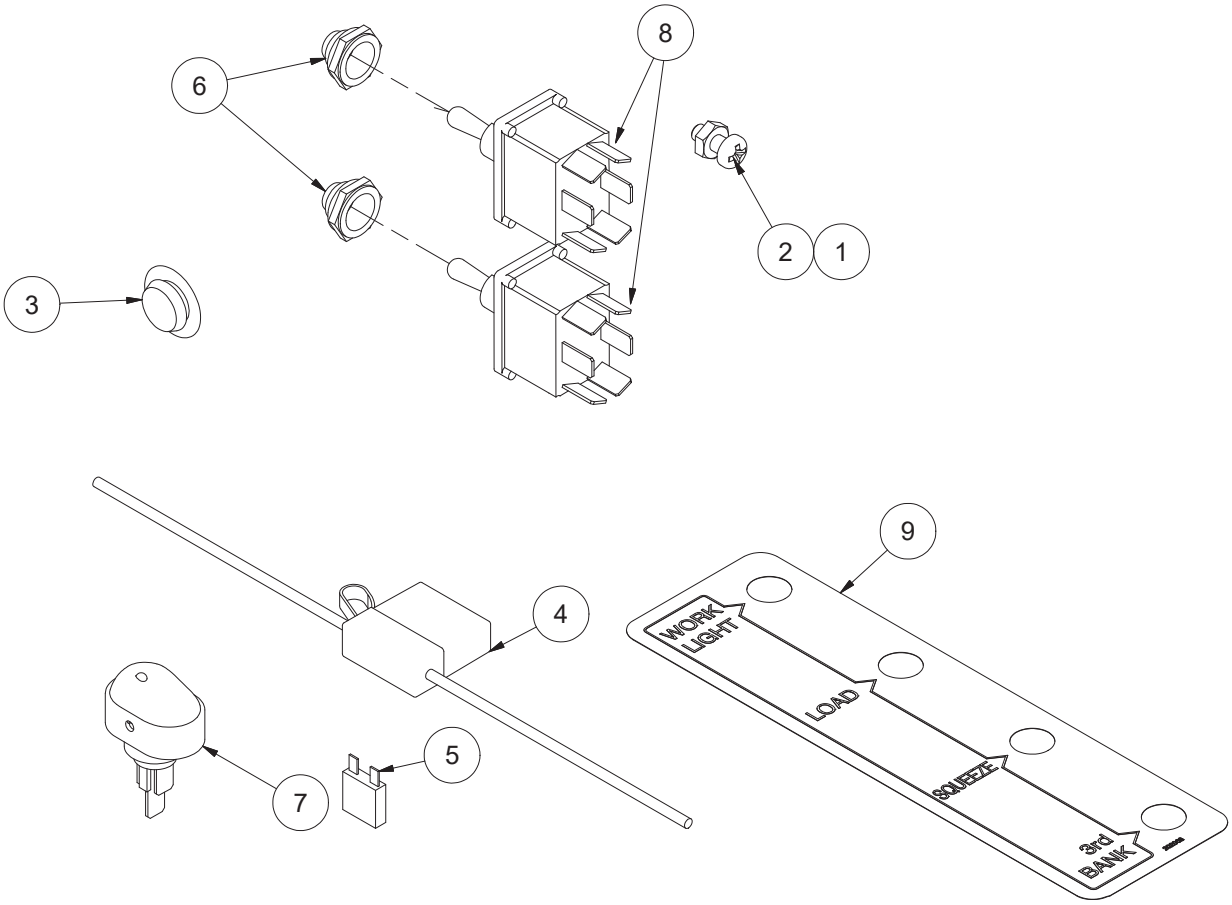

Non-Kit Switches

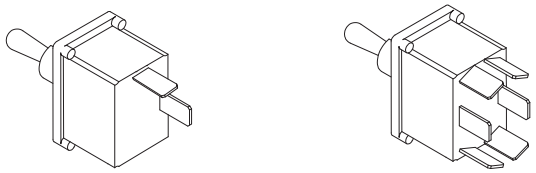

QTY	PART #	DESCRIPTION
1	132135	Work Light Switch, Toggle, SPST, On-Off
1	132134	AUX 3rd Bank, DPDT, On-Off-On
1	132127	XRM 3rd Bank, Momentary, (On)-Off-(On)

Parts List Kit: 235047

ITEM	QTY	PART #	DESCRIPTION
1	1	110119	Nut, 10-24 Lock
2	1	110264	Bolt, 10-24 X .5 Stainless, Phillips
3	2	110753	Plug, 1/2" Button Plastic
4	1	132001	Fuse Holder, Atc, 14 Ga., Mini
5	1	132002	Fuse, Mini 30 Amp
6	2	132035	Switch Boot
7	1	132044	Switch, SPST, Rocker LED
8	2	132127	Switch, Momentary (On)-Off-(On)
9	1	202003	Decal, Switch Identification

800/900 ELECTRICAL HARNESSES

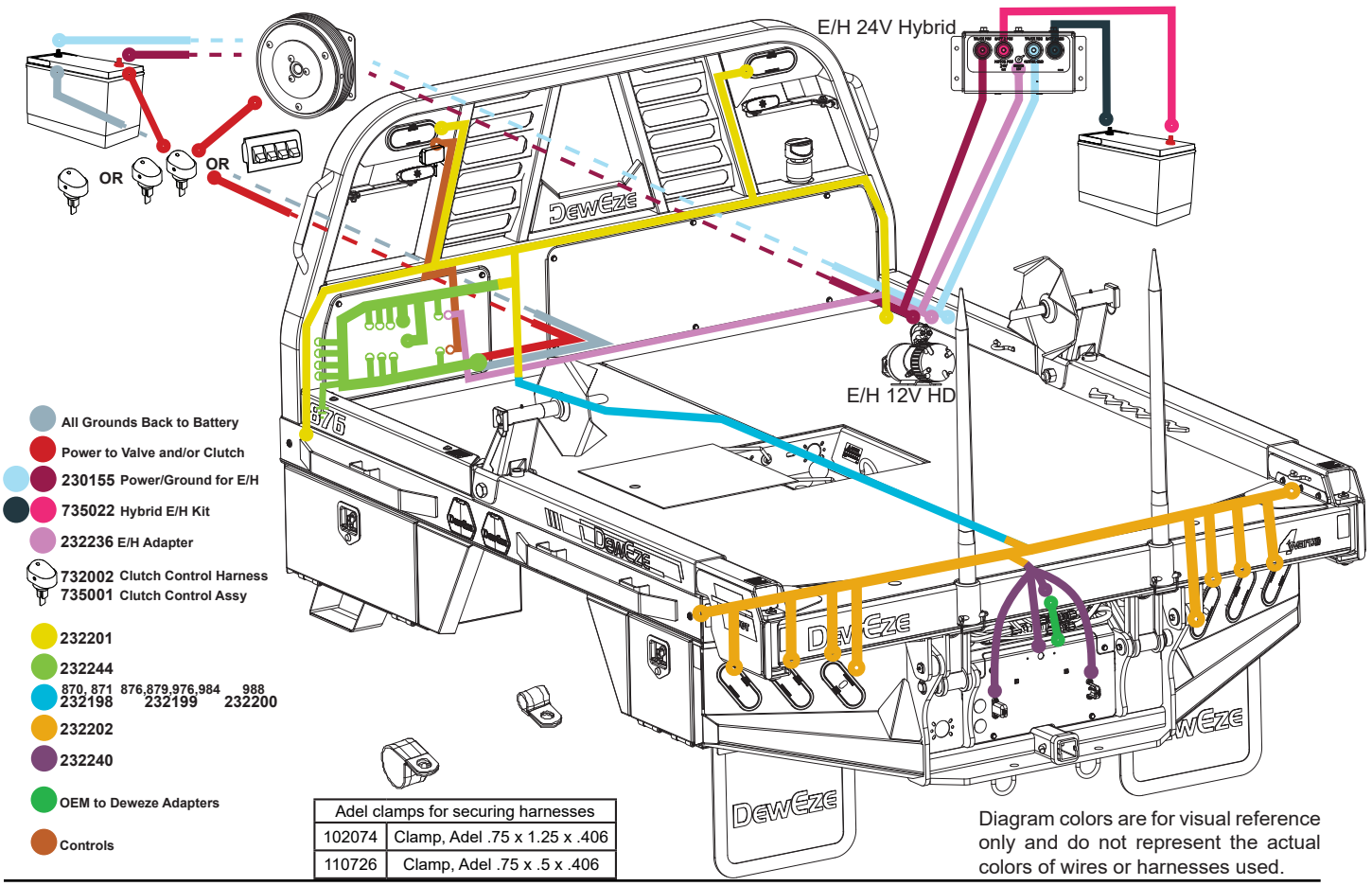

Adel clamps for securing harnesses	
102074	Clamp, Adel .75 x 1.25 x .406
110726	Clamp, Adel .75 x .5 x .406

Diagram colors are for visual reference only and do not represent the actual colors of wires or harnesses used.

All grounds must tie to the negative battery terminal. 800/900 series beds have a special grounded bolt near the driver's side headache rack for easy grounding.

Power is routed from the battery to switches in the cab, then one to clutch and one to valve.

EH Battery & Ground 2ga cable

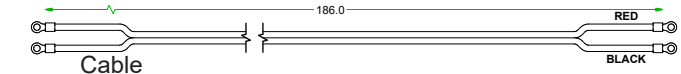

Cable
230155

EH Battery & Ground 2ga cable

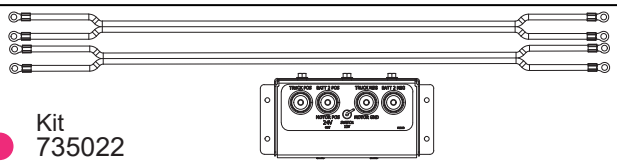

Kit
735022

EH Adapter

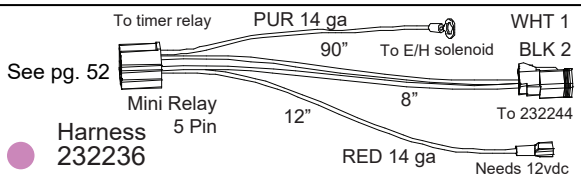

Harness
232236

The clutch has a single wire that must go to an on/off switch in the cab. Deweze recommends separate switches; one for the clutch and one for the valve. Deweze uses upfitter Aux 1 for the clutch and Aux 2 for the valve. Without upfitter switches, we install two SPST switches in the dash.

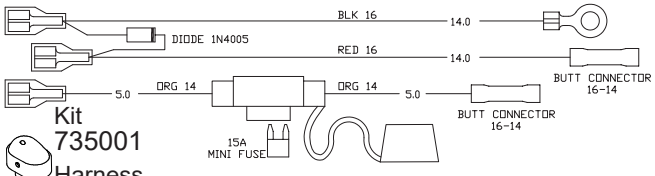

Kit
735001

Harness
732002

- Headache Rack Harness
- Valve Harness
- Front to Rear Harness
- Tailboard Harness
- Tailboard Harness Adapter

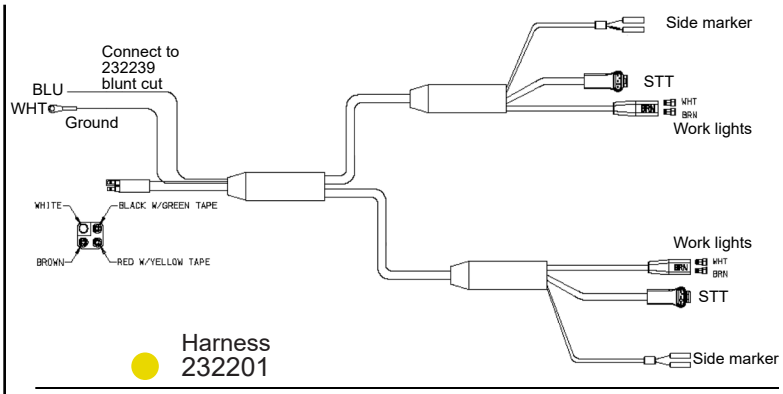

Harness 232201

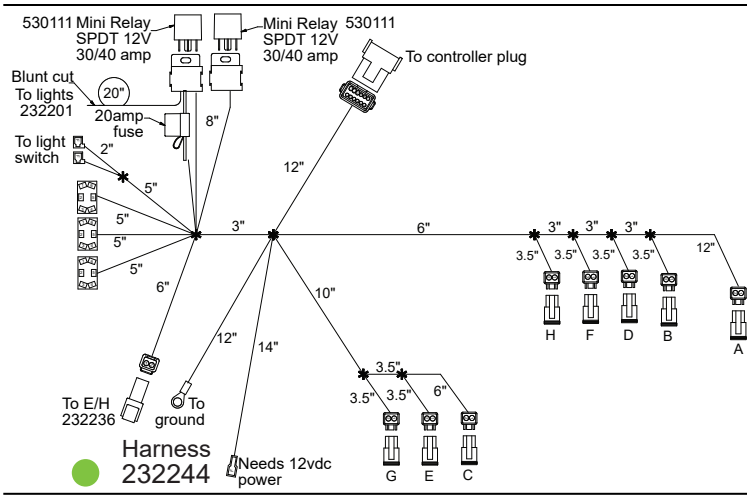

Harness 232244



876,879,976,984 232199

988 232200

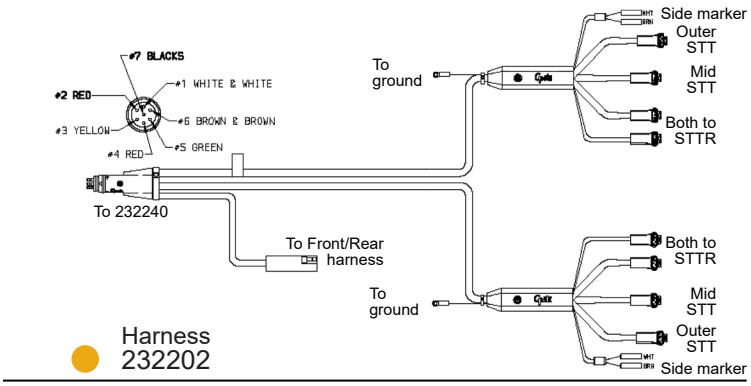

Harness 232202

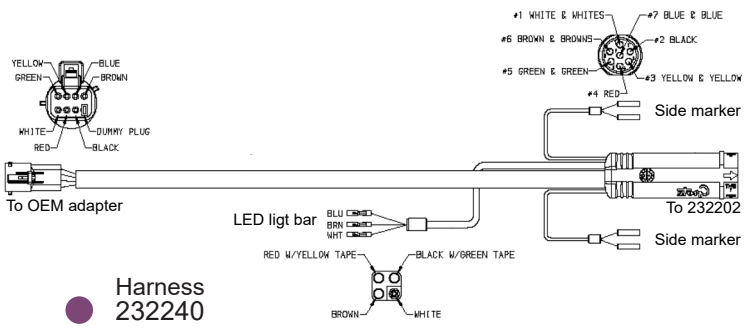

Harness 232240

RT WIRELESS (ENABLE FUNCTION)

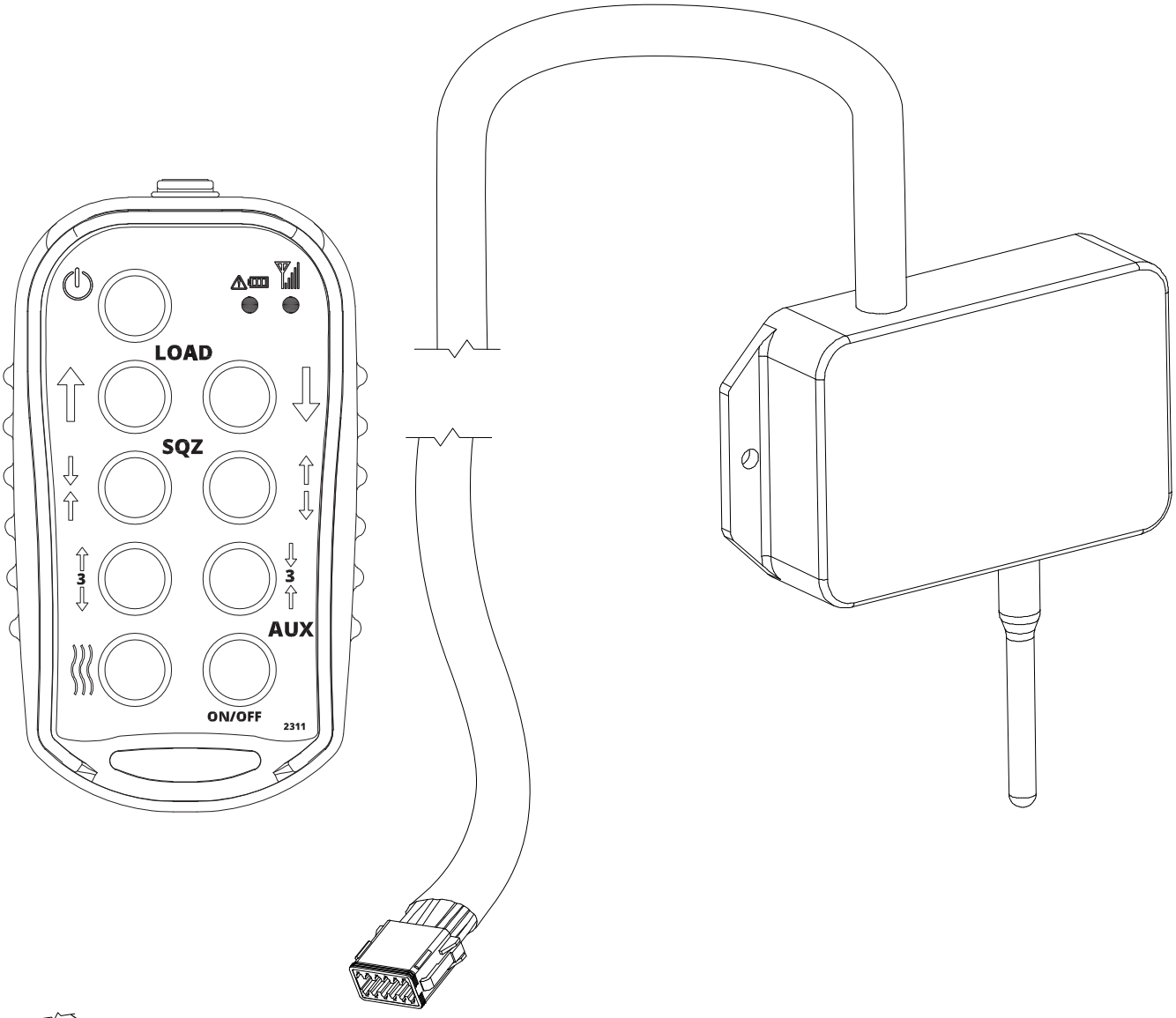

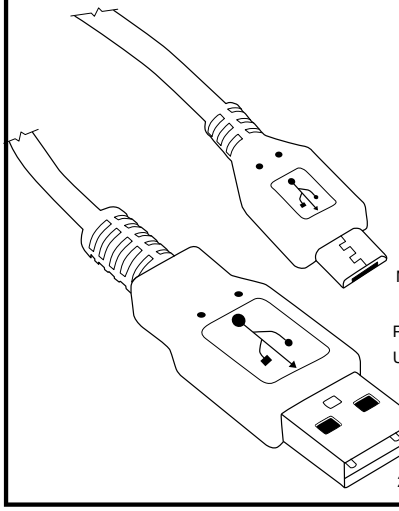

MICRO B

Preferred length 3'
Up to 6' is acceptable.

2.0 A

Parts List			
ITEM	QTY	PART #	DESCRIPTION
1	1	232197	Receiver
2	1	233011	Transmitter
3	1	233012	Receiver & Transmitter Kit
4	1	232245	Charging Cable, 2.0 A to Micro B, 3'

OEM TO DEWEZE ADAPTERS

PART#		DESCRIPTION	MAKE	TYPE	START YR	END YR
232161	FORD	Harness Adapter, FD CC	Ford	CC	1999	
232176		Harness Adapter, FD Box Delete, 2008-10	Ford	BTO	2008	2010
232160		Harness Adapter, FD Box Delete, 2011-16	Ford	BTO	2011	2016
232177		Harness Adapter, FD Box Delete, 2017-19	Ford	BTO	2017	2019
232185		Harness Adapter, FD Box Delete, 2020-22	Ford	BTO	2020	2022
232192		BLIS Add On for **232185** (Cut purple & red wires from 20 pin, splice into 232192)	Ford	BLIS	2020	2022
232234		Harness Adapter, FD Box Delete W/BLIS 23+	Ford	BTO	2023	
232174	CHEVY	Harness Adapter, GM 02-14 w/3rd Brake	GM	ALL	2002	2014
232163		Harness Adapter, GM 02-14 No 3rd Brake	GM	ALL	2002	2014
232158		Harness Adapter, GM 2015 ONLY	GM	ALL	2015	2015
232159		Harness Adapter, GM 2016-2019	GM	ALL	2016	2019
232179		Harness Adapter, 2019 MD Dty 4500-6500	GM	ALL	2019	
232187		Harness Adapter, GM CC 2020+	GM	CC	2020	
232178		Harness Adapter, 2020 GM 2500-3500	GM	ALL	2020	
232238		Harness Adapter, GM BTO	GM	BTO	2024	
232164	DODGE	Harness Adapter, Ram CC	Dodge	CC	1999	
232193		Harness Adapter, Ram Box Delete (STD)	Dodge	BTO	2019	2026
232233		Add to **232193** Harness Adapter, Ram Box Delete (LED)	Dodge	BTO	2019	2026
232248		Harness Adapter, Ram Box Delete (STD)	Dodge	BTO	2026	
232249		Add to **232248** Harness Adapter, Ram Box Delete (LED)	Dodge	BTO	2026	
232162		Harness Adapter, Generic	ALL	ALL	1999	

DODGE

Deweze DOES NOT provide a solution for FAST FLASHING lights. Customers can source LOAD EQUALIZERS independantly.

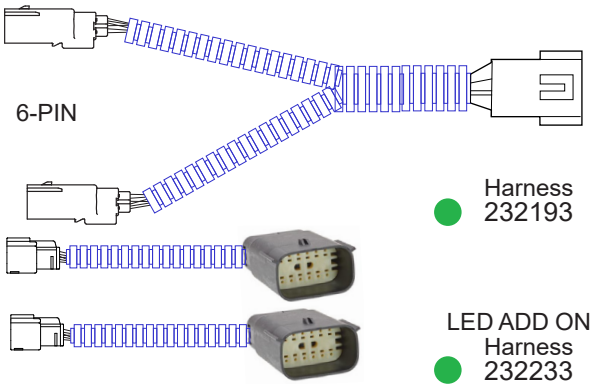

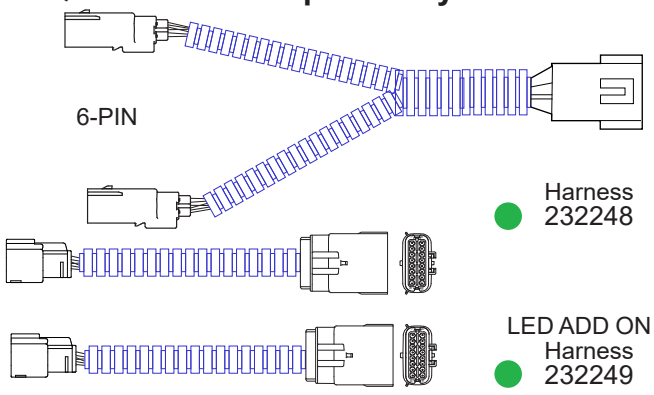

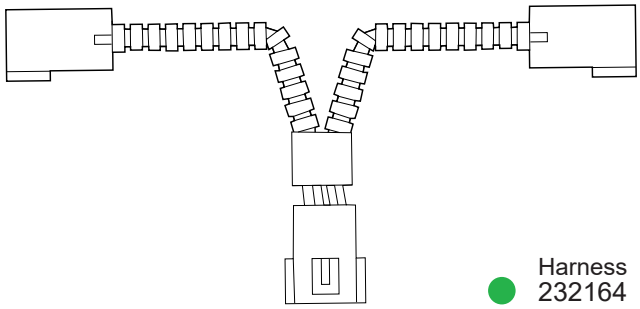

GENERIC (BLUNT CUT)

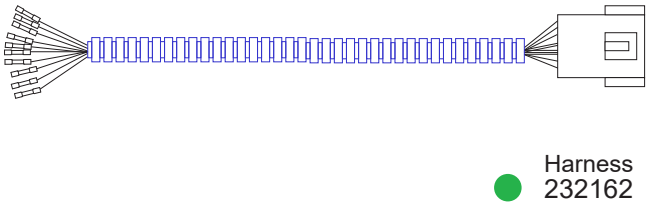

FORD

● OEM to Deweze Adapters

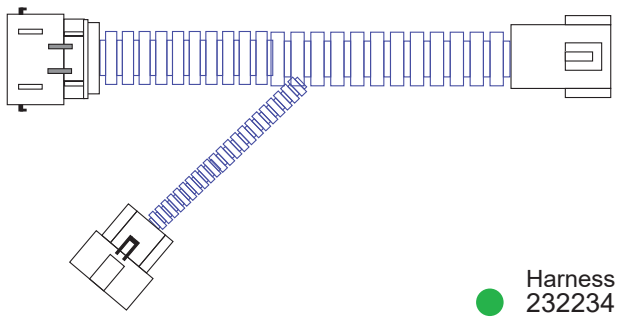

● Harness
232234

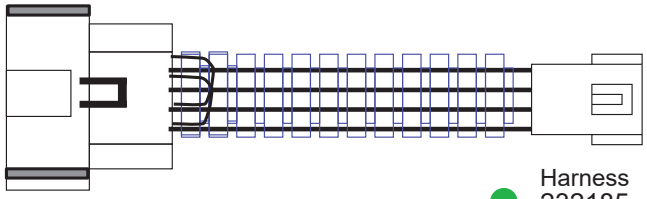

● Harness
232185
232177
232160

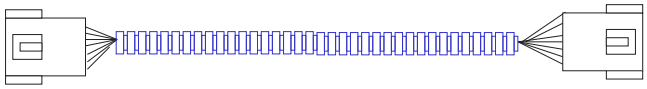

● Harness
232176

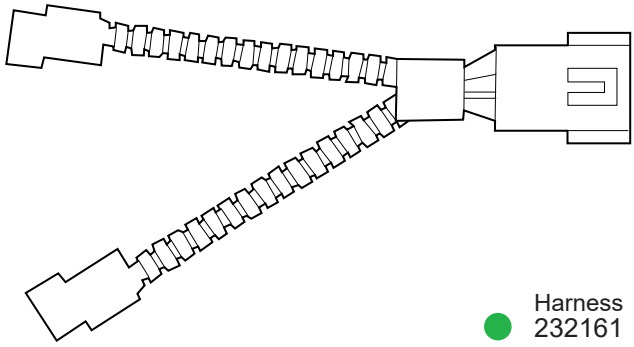

● Harness
232161

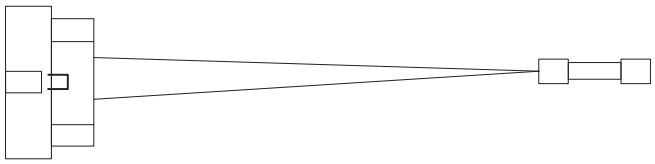

● Harness
232192

CHEVY

● OEM to Deweze Adapters

Purple wires only for fast flashing issue. See pg. 81

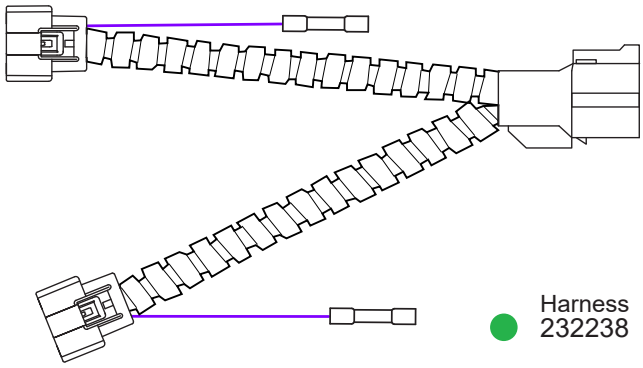

● Harness
232238

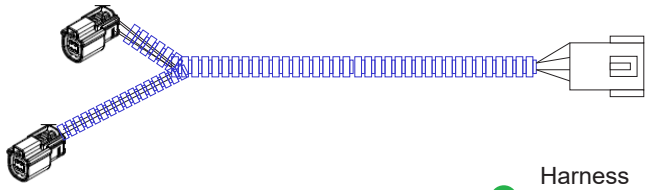

● Harness
232178
232159
232187

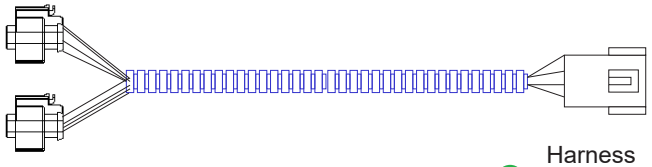

● Harness
232158

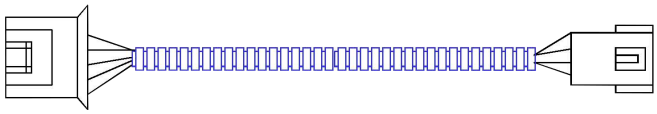

● Harness
232174
232163

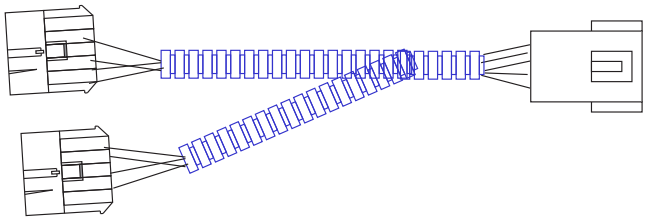

● Harness
232179

E/H & E/H HYBRID PARTS: RT

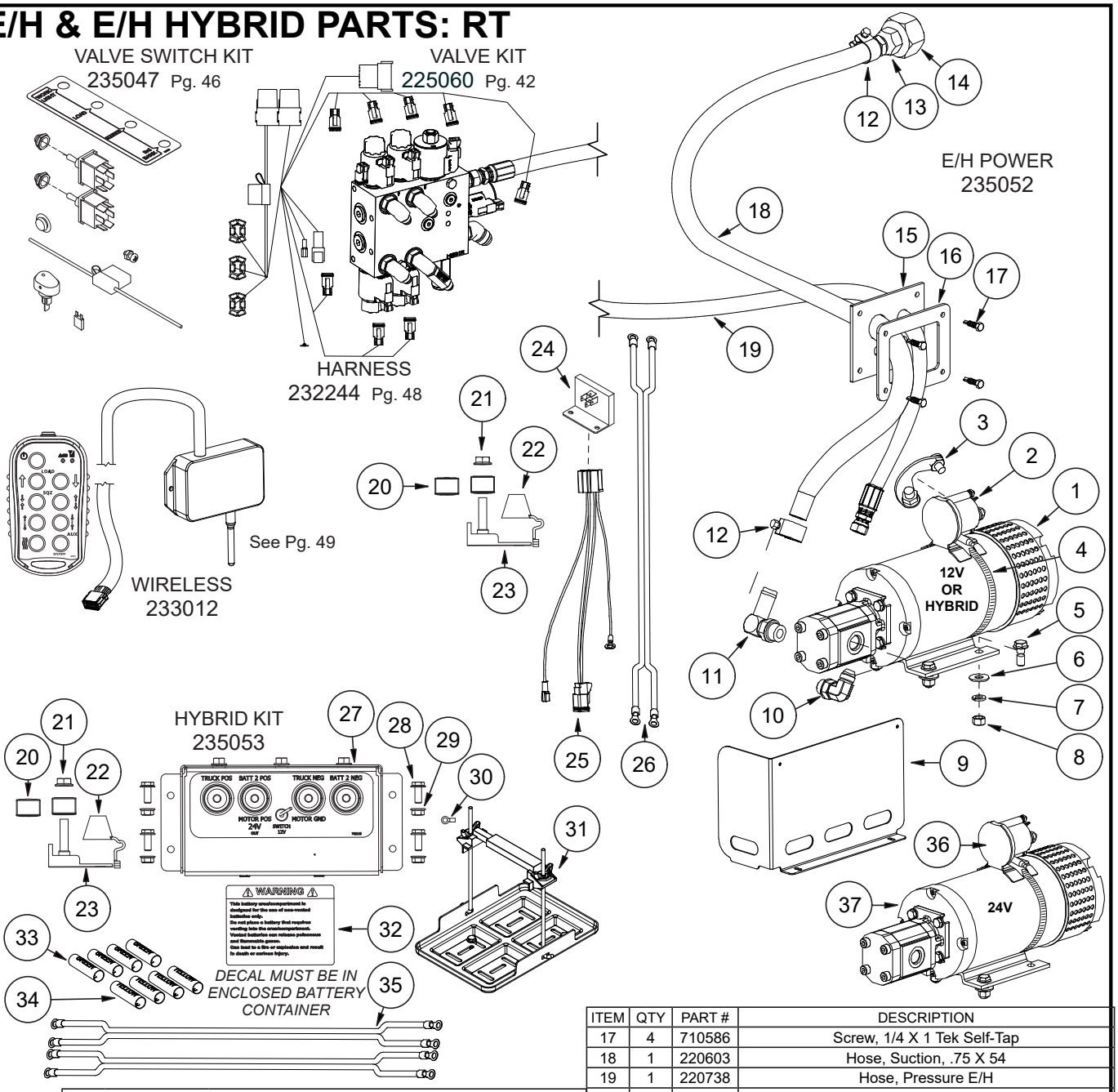

Parts List			
ITEM	QTY	Part #	DESCRIPTION
1	1	222103	Pump, Bucher HD
2	1	232103	Solenoid, 4 Post 12vdc Contactor
3	1	232102	Strap, Solenoid To Motor
4	1	940028	Hose Clamp 6”
5	4	110440	Bolt, 3/8-16 X 1, Wiz Flange
6	4	110676	Washer, 3/8 Flat Standard
7	4	110672	Washer, 3/8 Lock
8	4	110826	Nut, 3/8-16 GR 5
9	1	260400	Shield, E/H
10	1	120288	Adapter, 8mj-8mb90
11	1	120184	Adapter, 12bh-10mb90
12	2	112136	Clamp, 3/4” T-Bolt, Supra W2-120
13	1	120764	Adapter, 12fjx-12hb
14	1	120763	Adapter, 20fj-12mj
15	1	260401	Access Cover, E/H
16	1	211849	Access Cover Frame
17	4	710586	Screw, 1/4 X 1 Tek Self-Tap
18	1	220603	Hose, Suction, .75 X 54
19	1	220738	Hose, Pressure E/H
20	2	132094	Fuse 200 Amp, Buss MRBF-200
21	1	110141	Nut, M8 X 1.25 Wizflange
22	1	132092	Fuse Cover, Buss Cfcover-1R
23	1	132093	Fuse Holder, Buss CFbar1-M8xSP
24	1	232241	Timer Relay, 3 Sec Off-Delay
25	1	232236	Timer Harness
26	1	230155	Battery Cable, 2ga Twin Lead, 186”
27	1	735021	12/24 Vdc Series/Parallel Switch Unit
28	4	110444	Bolt, 5/16-18 X 0.75, Wiz Flange
29	4	110606	Nut, 5/16-18 Wiz Flange
30	1	132040	Terminal Ring 22-16ga
31	1	235023	Battery Tray Kit
32	1	202180	Decal, Non-Vented Battery Warning
33	4	230165	Green Heat Shrink Tubing 3”
34	4	230166	Yellow Heat Shrink Tubing 3”
35	2	230161	Battery Cable, 2ga Twin Lead, 48”
36	1	132121	Solenoid, 4 Post, 24VDC Contactor
37	1	735014	Motor/Pump Unit HD 24V

E/H HYBRID INSTRUCTIONS

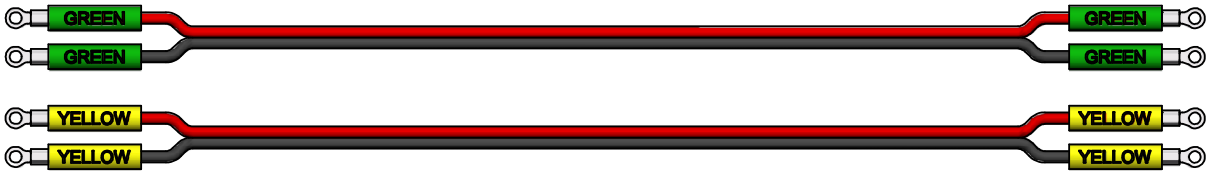

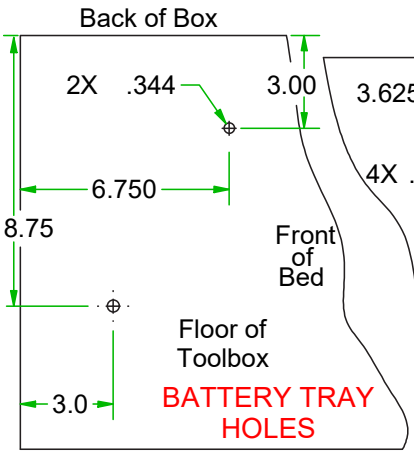

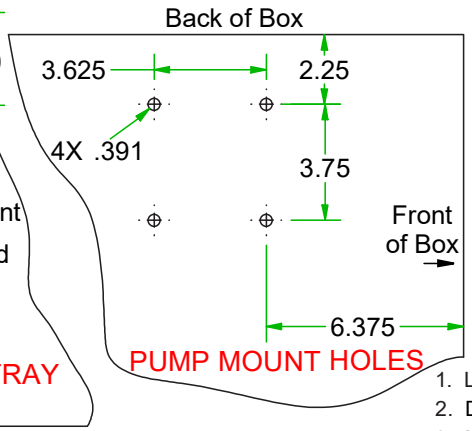

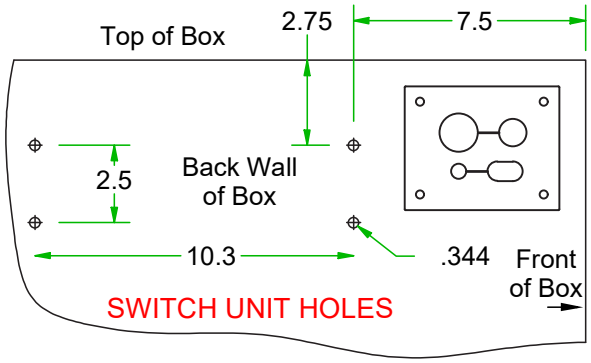

1. Label the 48" paired cables. Will aid in troubleshooting.
2. Drill holes in back wall and floor of toolbox.
3. Mount Switch Unit on back wall
4. Install battery tray and battery on floor
5. Attach 200 amp fuse holder to positive battery terminal
6. Attach battery cables as indicated on wiring diagram.

⚠ WARNING

This battery area/compartment is designed for the use of non-vented batteries only.
Do not place a battery that requires venting into this area/compartment.
Vented batteries can release poisonous and flammable gases.
Can lead to a fire or explosion and result in death or serious injury.

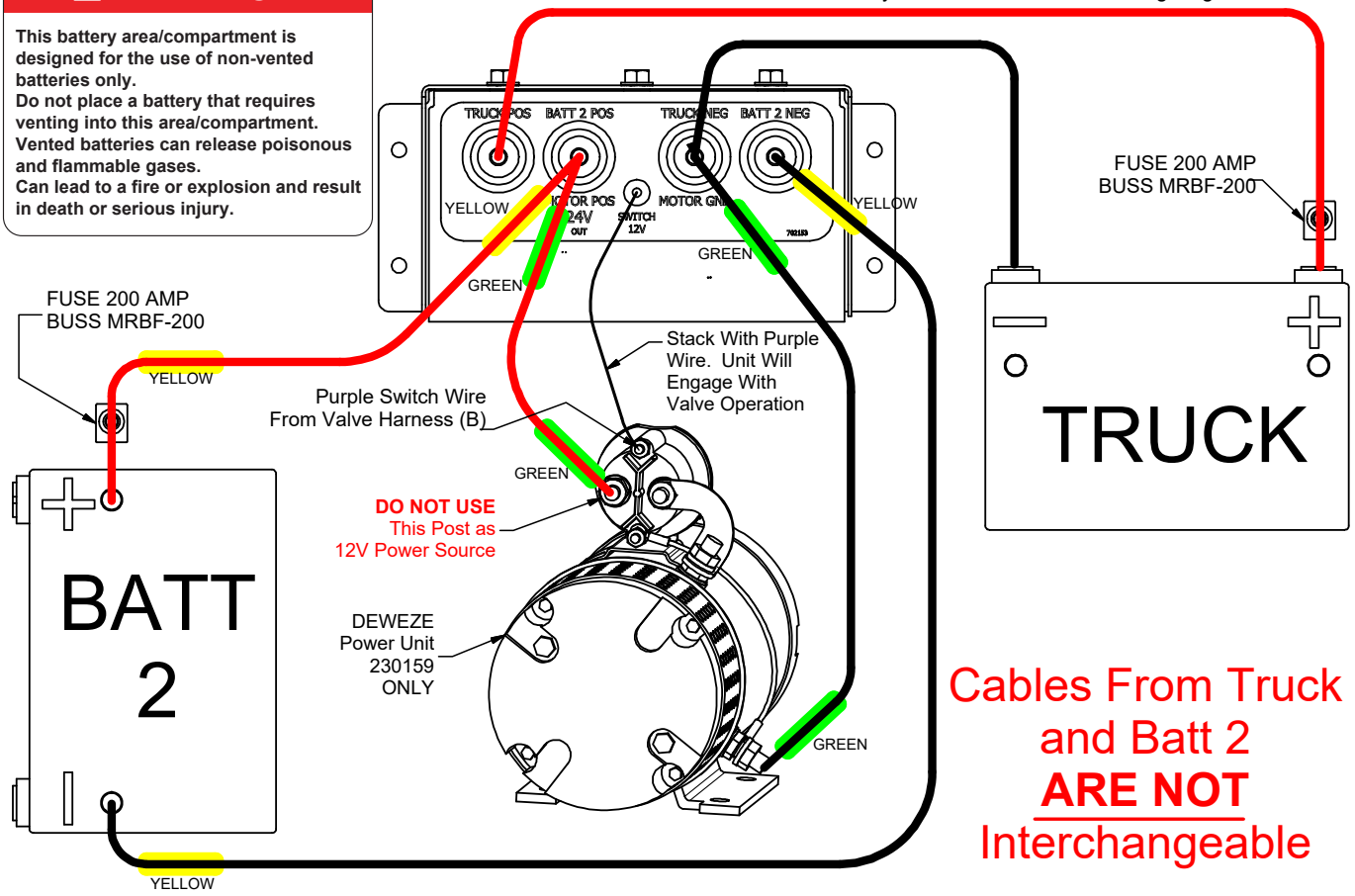

Cables From Truck and Batt 2 **ARE NOT** Interchangeable

MANDATORY: Use AGM or Other Non-Vented Battery.
Risk of explosion from hydrogen buildup.

BED LIGHTS

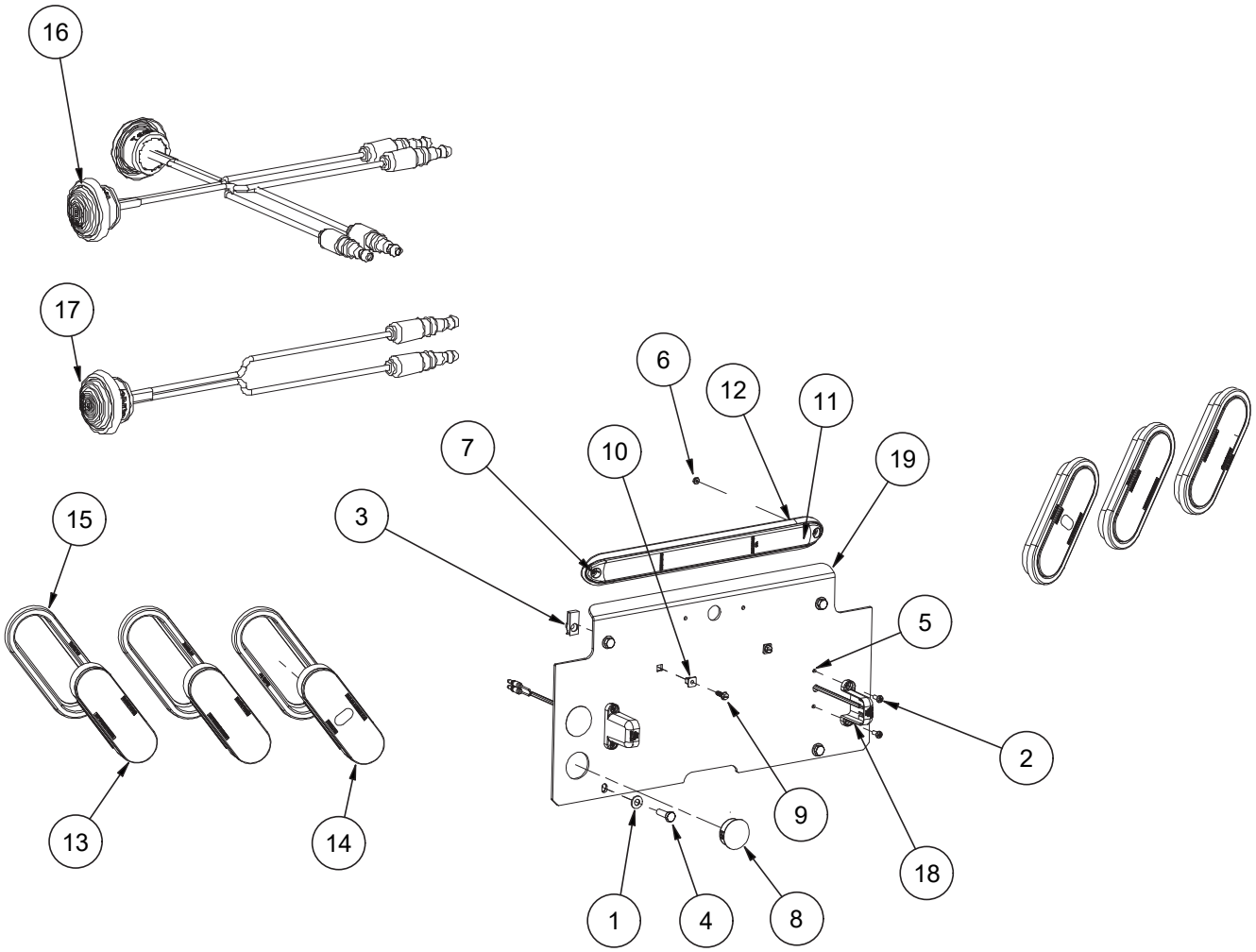

ITEM	QTY	PART #	DESCRIPTION
1	4	110069	Washer, 5/16" Flat SAE
2	4	110264	Bolt, 10-24 X .5 Stainless, Phillips
3	4	110319	Nut, 5/16-18 U-Type .75l
4	4	110423	Bolt, 5/16-18 X 1.0
5	4	110631	Nut, 10-24 Lock Nylon Insert
6	2	110633	Nut, #6/32 Machine Screw
7	2	110756	Screw, 6/32 X 1/2 In Pan Head
8	2	111261	Plug, Plastic, 1.5 Thick Panel Dome
9	2	200050	Screw, #12 X 3/4 Hex Head
10	2	200051	Nylon License Plate Insert
11	1	232206	Light, Id And Load Lamp
12	1	232207	Trim Ring, Black
13	4	232209	Light, 6" Oval STT
14	2	232210	Light, 6" Oval STTR
15	6	232211	Grommet, 6" Oval
16	4	232212	Light, 3/4" Sidemarker, Amber
17	2	232213	Light, 3/4" Sidemarker, Red
18	2	232242	Light, License, Vertical Mount, Short
19	1	261343	Panel, Rear, Lower

264002 REV: D

HEADACHE RACK LIGHTS

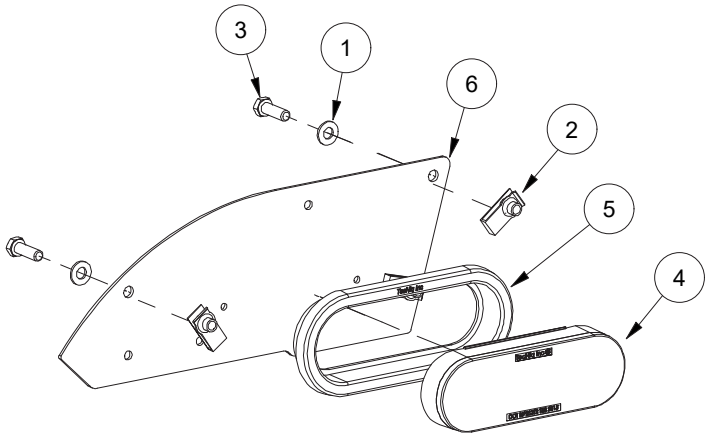

Parts List			
ITEM	QTY	PART #	DESCRIPTION
1	6	110069	WASHER, 5/16" FLAT SAE
2	6	110319	NUT, 5/16-18 U-TYPE .75L
3	6	110423	BOLT, 5/16-18 X 1.0
4	2	232209	LIGHT, 6" OVAL STT
5	2	232211	GROMMET, 6" OVAL
6	2	261156	COVER, LIGHT

264043 REV: B

HEADACHE RACK SWING LIGHT KIT

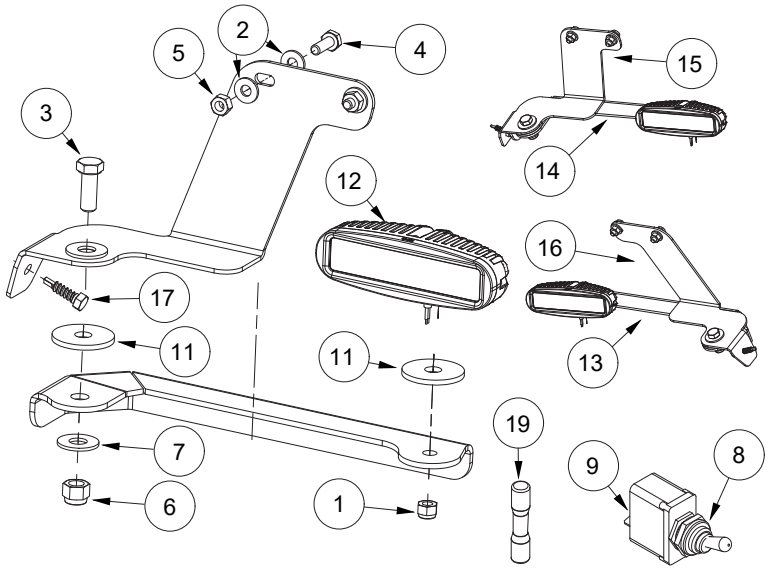

Parts List Kit: 264043			
ITEM	QTY	PART #	DESCRIPTION
1	2	110230	Nut, M8 X 1.25, Lock Nylon
2	8	110298	Washer, 1/4" Flat Sae
3	2	110420	Bolt, 3/8-16 X 1.0
4	4	110561	Bolt, 1/4-20 X .75
5	4	110609	Nut, 1/4-20
6	2	110618	Nut, 3/8-16 Lock Nylon Insert
7	4	110676	Washer, 3/8" Flat Standard
8	1	132035	Switch Boot
9	1	132135	Switch, Toggle, Spst, On-Off
10	1	132147	Terminal, Butt Connect 16-14, Heat Shink
11	4	211747	Friction Washer 1.5"
12	2	232243	LED, 5" Rect, Flood, Bullet Connectors
13	1	260624	Bracket, Swing Light, Arm, Right
14	1	260625	Bracket, Swing Light, Arm, Left
15	1	261206	Bracket, Swing Light, Left
16	1	261207	Bracket, Swing Light, Right
17	2	710586	Screw, 1/4 X 1 Tek Self-Tap


232214
NOT USED

264034 REV: A

HEADACHE RACK FIXED LIGHT KIT

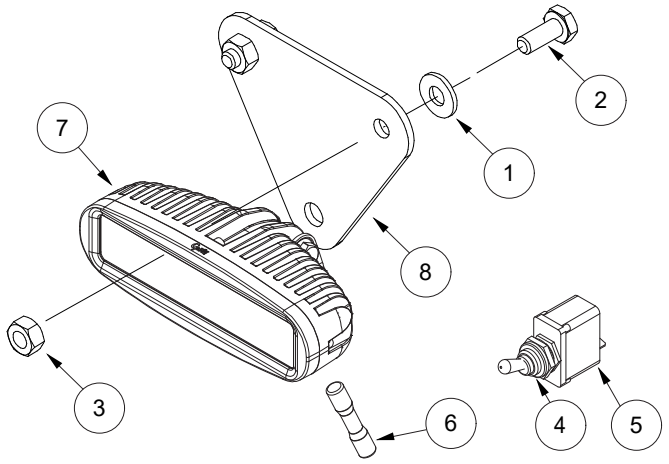

Parts List Kit: 264034			
ITEM	QTY	PART #	DESCRIPTION
1	4	110298	Washer, 1/4" Flat SAE
2	4	110299	Bolt, 1/4-20 X .625 Hex GR 5
3	4	110609	Nut, 1/4-20
4	1	132035	Switch Boot
5	1	132135	Switch , Toggle, SPST, On-Off
6	2	132147	Terminal, Butt Connect 16-14, Heat Shink
7	2	232243	LED, 5" Rect, Flood, Bullet Connectors
8	2	260626	Bracket, Cargo Light


232214
NOT USED

264001 REV: D

HEADACHE RACK COVERS (REGULAR)

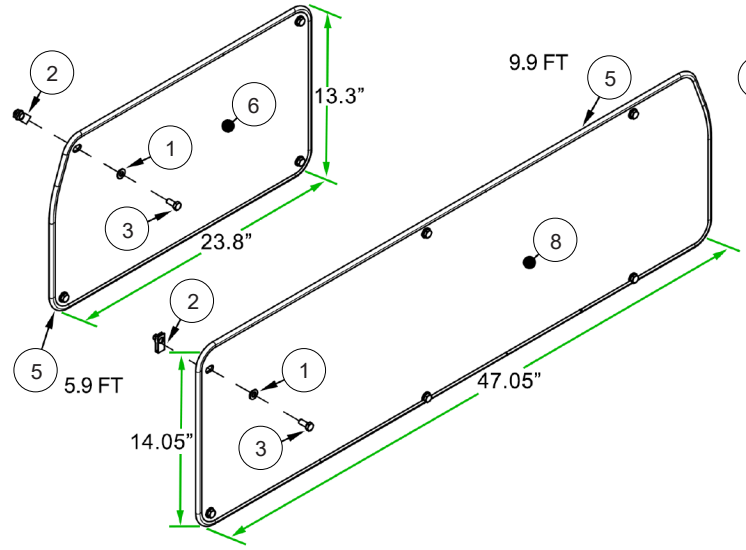

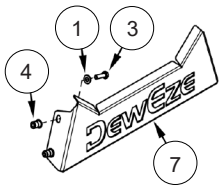

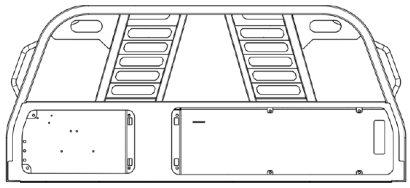

Parts List			
ITEM	QTY	PART #	DESCRIPTION
1	14	110069	Washer, 5/16" Flat Sae
2	10	110319	Nut, 5/16-18 U-Type .75l
3	14	110423	Bolt, 5/16-18 X 1.0
4	4	110849	Nut, 5/16-18 Rivet Steel
5	15.8'	200249	Molding, Valve Cover
6	1	261104	Cover, Valve
7	1	261105	Plate, Deweze
8	1	261155	Cover, Hydraulic Tank

264033 REV: C

HEADACHE RACK COVERS (MEDIUM)

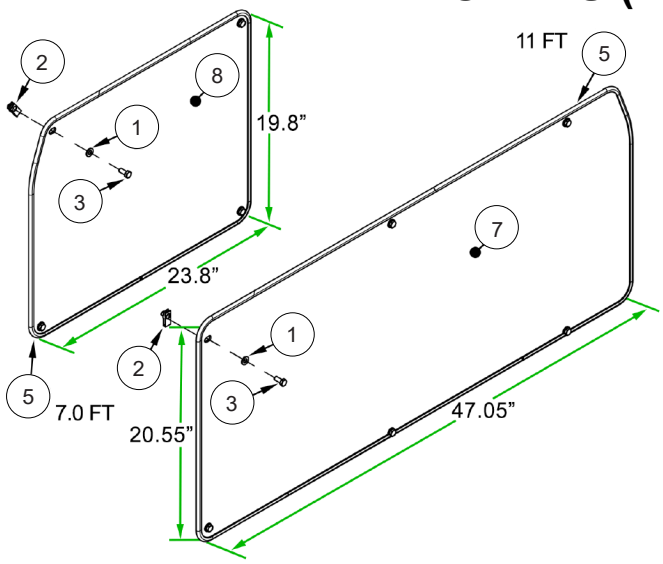

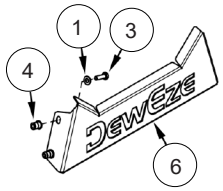

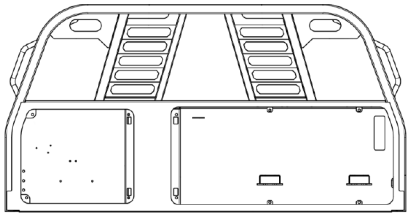

Parts List			
ITEM	QTY	PART #	DESCRIPTION
1	14	110069	Washer, 5/16" Flat Sae
2	10	110319	Nut, 5/16-18 U-Type .75l
3	14	110423	Bolt, 5/16-18 X 1.0
4	4	110849	Nut, 5/16-18 Rivet Steel
5	18'	200249	Molding, Valve Cover
6	1	261105	Plate, Deweze
7	1	261148	Cover, Hydraulic Tank, Med
8	1	261149	Cover, Valve, Med

264067 REV: A

HEADACHE RACK COVERS (TALL)

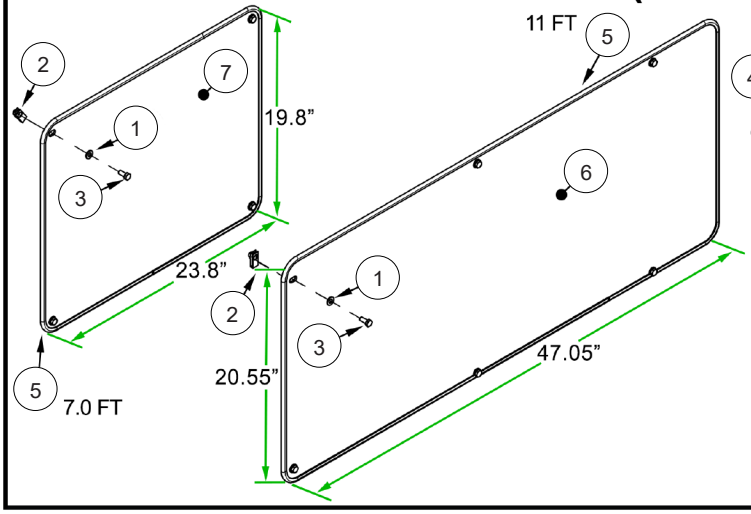

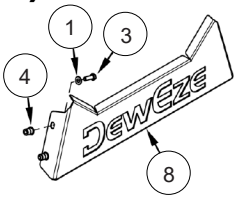

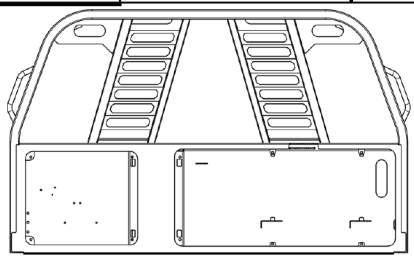

Parts List			
ITEM	QTY	PART #	DESCRIPTION
1	14	110069	Washer, 5/16" Flat Sae
2	10	110319	Nut, 5/16-18 U-Type .75l
3	14	110423	Bolt, 5/16-18 X 1.0
4	4	110849	Nut, 5/16-18 Rivet Steel
5	18'	200249	Molding, Valve Cover
6	1	261317	Cover, Hydraulic Tank, Tall
7	1	261318	Cover, Valve, Tall
8	1	261319	Plate, Deweze, Tall

STANDARD BALL WELL ASSEMBLY

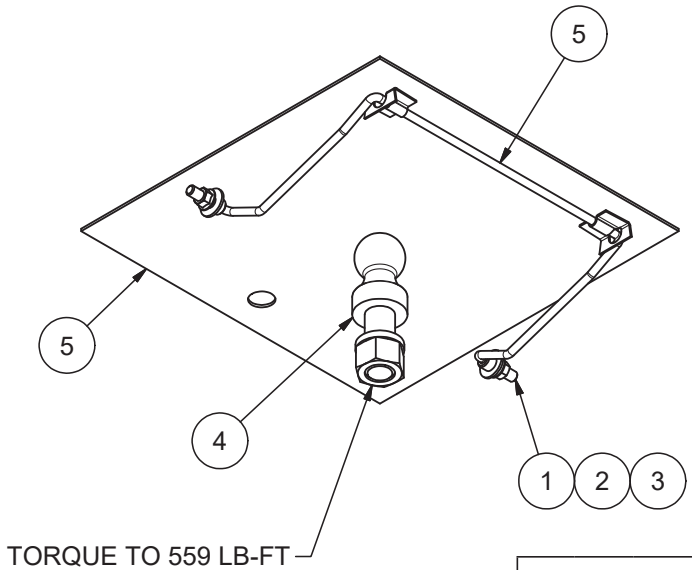

Parts List			
ITEM	QTY	PART #	DESCRIPTION
1	2	110244	Bolt, 1/2-1 3 X 1.5 Shcs
2	2	110588	Nut, 1/2-1 3 Wiz Flange
3	2	110658	Washer, 1/2" Flat Standard
4	1	212032	Hitch Ball, 2 5/16 X 1 3/8 X 1 With Hardware
5	1	265172	Weldment, Ball Well Door

REV:

HITCH ADAPTER SLEEVE AND PIN

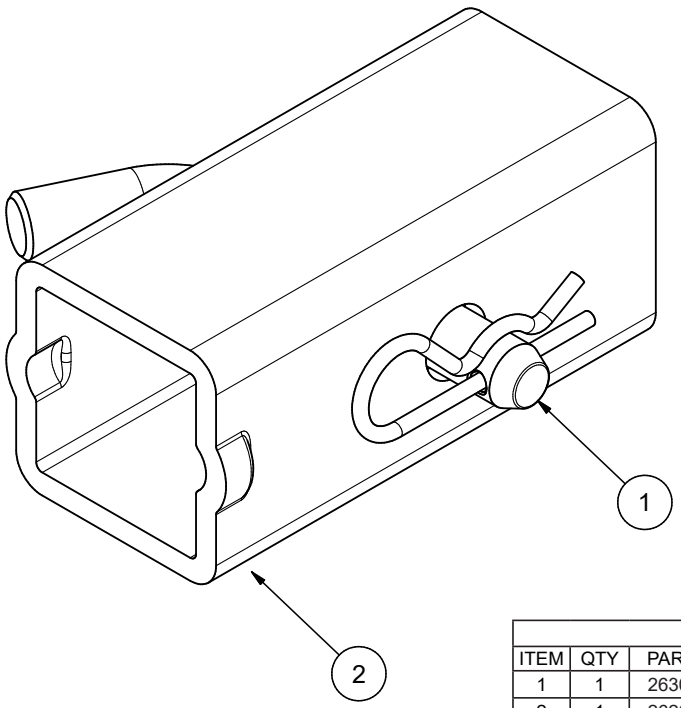

Parts List			
ITEM	QTY	PART #	DESCRIPTION
1	1	263006	Hitch Pin Assembly, 5/8"
2	1	262004	Adapter Sleeve, 2.5" to 2"

264162	REV: NC	264006	REV: A

800/900 REAR PANEL ASSEMBLY

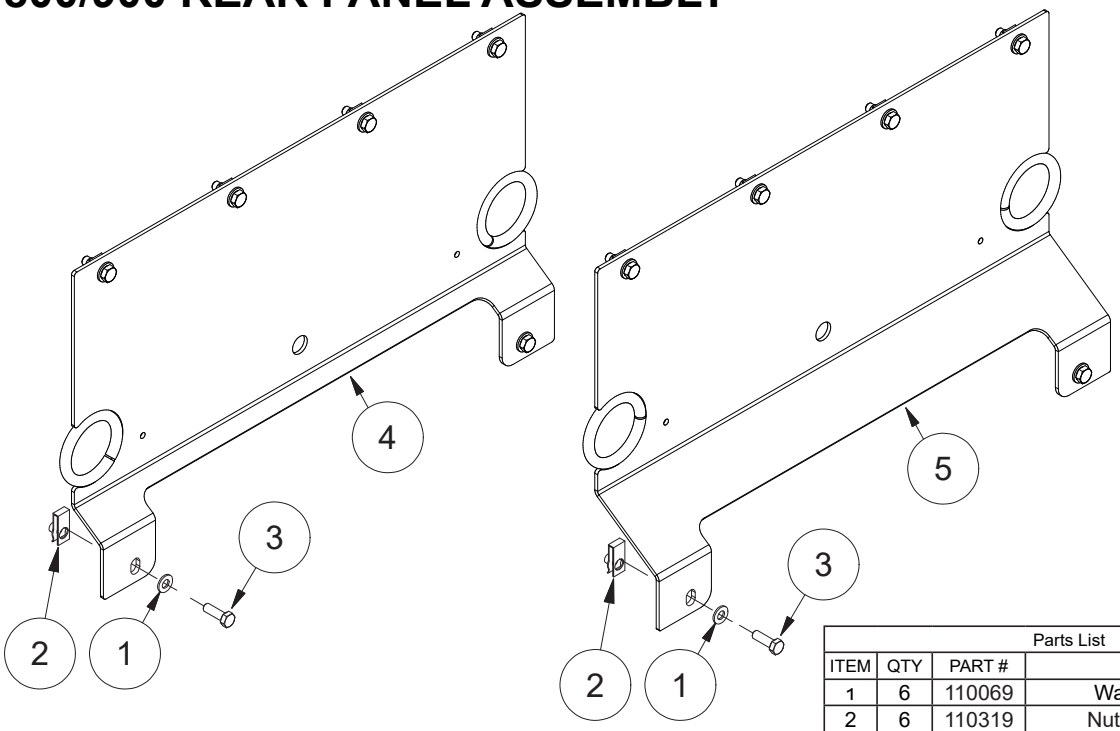

Parts List			KIT: 264006
ITEM	QTY	PART #	DESCRIPTION
1	6	110069	Washer, 5/16" Flat Sae
2	6	110319	Nut, 5/16-18 U-Type .75l
3	6	110423	Bolt, 5/16-18 X 1.0
4	Kit	264006	Weldment, Rear Panel, No Spike
5	Kit	264162	Center Panel Upper, XRT

	REV:

RT & XRT ABOVE BED TOOLBOX SELECTION DETAILS

BED MODELS	24" TOOLBOX	40" TOOLBOX	60" TOOLBOX
876	24”	N/A	N/A
879	24”	40”	N/A
976	24”	N/A	N/A
984	24”	40”	N/A
988	24”	40”	60"
XRT 60	24”	40”	N/A
XRT 84	24”	40”	60"

272001

24”

28x20x24”

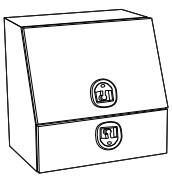

272002

40”

28x20x40”

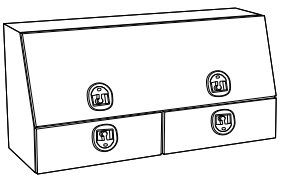

272005

60”

28x20x60”

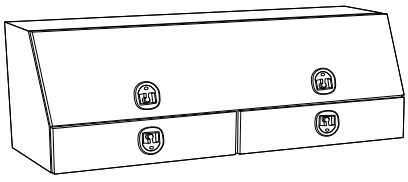

RT & XRT BELOW BED TOOLBOX SELECTION DETAILS

BED MODELS	FRONT TOOLBOX	REAR TOOLBOX
876	30”	18”
879	30”	24”
976	30”	18”
984	30”	24”
988	2 x 30” or 60"	24”
XRT 60	30”	XRT 24”
XRT 84	2 x 30” or 60"	XRT 24”

263001

30”

30 x 14 x 13.5”

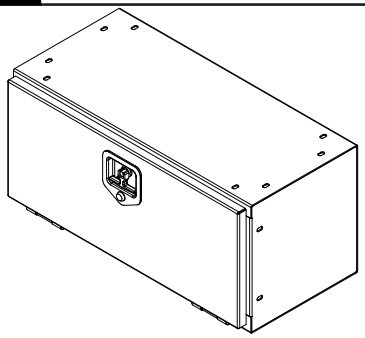

263002

24”

24 x 14 x 13.5”

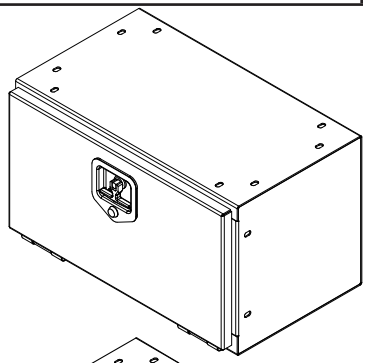

263004

18”

18 x 14 x 13.5”

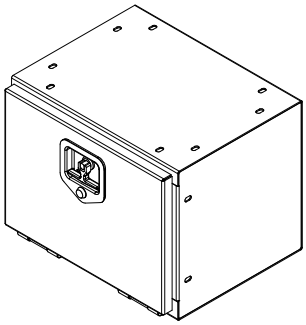

272006

XRT

24”

24 x 14 x 13.5”

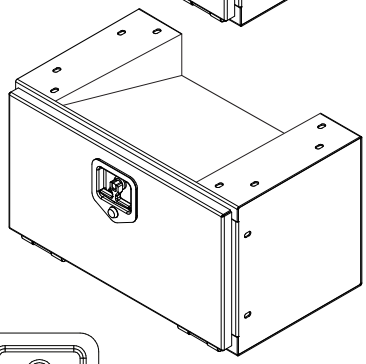

60" TOOLBOX INSTALL KIT

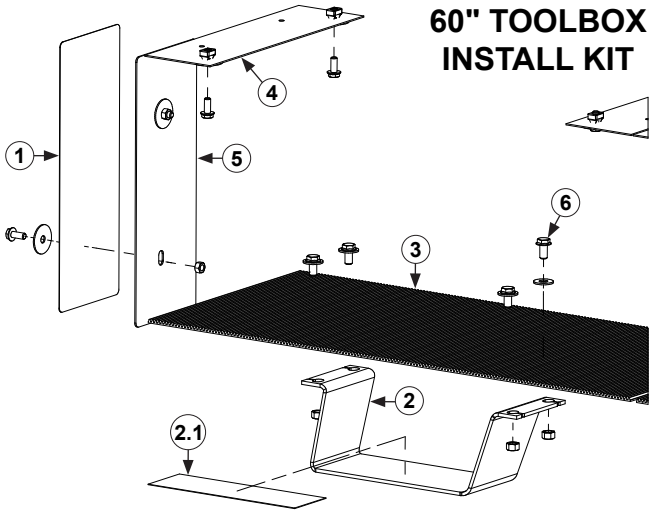

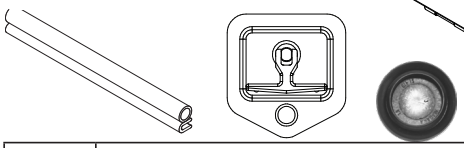

PART #	DESCRIPTION
102030	Toolbox Seal (sold by foot)
102053	Plug, Button 1.00
282011	Toolbox Latch

PARTS LIST: 60" Toolbox Install Kit: 264166

ITEM	QTY	PART #	DESCRIPTION
1	2	202169	Decal, Chip Guard
2	4	211109	Step, Toolbox
2.1	1	215474	Traction Pad, Flex-Tread 2.75" X 0.75'
3	4	211119	Tool Box Mat
4	8	212003	Gasket, Toolbox Mount
5	2	261014	Plate, Chip Guard
6	1	264167	Kit, Toolbox Hardware, 60in.

272007

988 or XRT 84

60”

60 x 14 x 13.5”

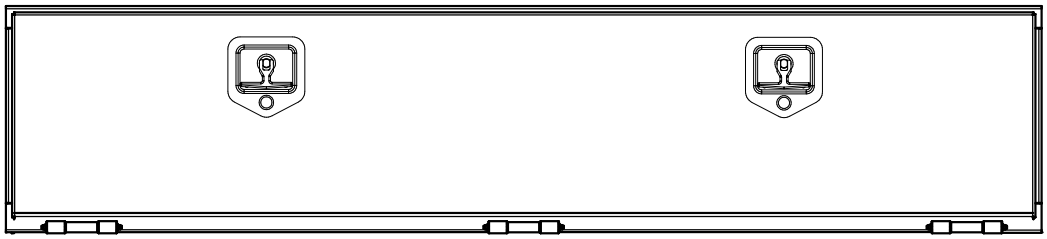

RT & XRT SKIRT SELECTION DETAILS

BED MODELS	FRONT (1 TBX)	FRONT (2 TBX)	REAR (w/TBX)	REAR (no/TBX)
876	264062	N/A	264062	264053
879	264062	N/A	264062	264054
976	264062	N/A	264062	264053
984	264062	N/A	264062	264054
988	264088	264049	264062	264054
XRT 60	264062	N/A	264062	264054
XRT 84	264088	264049	264062	264054

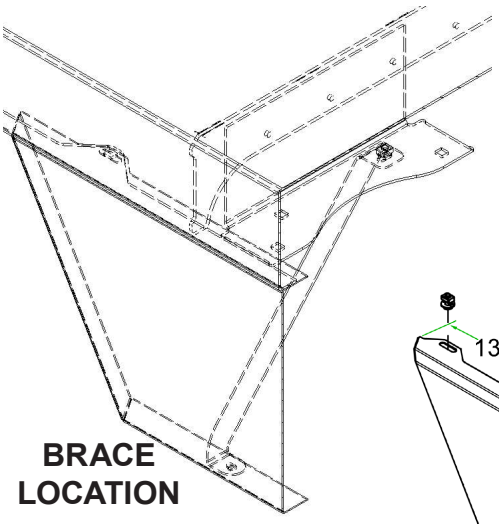

BRACE KITS have been added to shore up rear skirts. Utilize the hole as shown in the image to the left and drill a hole in the skirt at the appropriate place for your alignment.

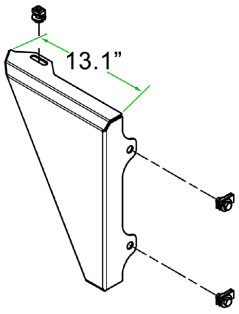

264062 PARTS LIST			
Item	Qty	Part #	DESCRIPTION
1	1	261117	F DRV, 13.1”
2	1	261118	F PSS, 13.1”
3	1	264048	KIT, FILLER SKIRT HARDWARE

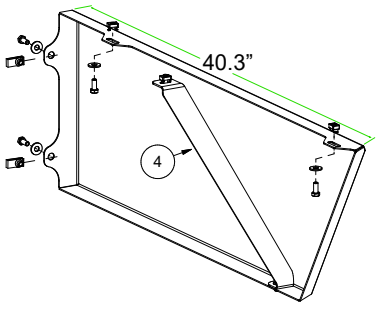

264088 PARTS LIST Rev A			
Item	Qty	Part #	DESCRIPTION
1	1	261294	F DRV, 40.3”
2	1	261295	F PSS, 40.3”
3	1	264105	KIT, FILLER SKIRT HARDWARE
4	1	264135	KIT, SKIRT BRACES

264049 PARTS LIST Rev A			
Item	Qty	Part #	DESCRIPTION
1	1	261115	F DRV or R PSS, 10.3”
2	1	261116	R DRV or F PSS, 10.3”
3	1	264048	KIT, FILLER SKIRT HARDWARE

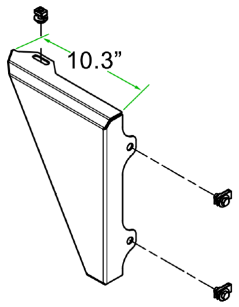

264047 PARTS LIST Rev B			
Item	Qty	Part #	DESCRIPTION
1	1	261123	R DRV, 24.8”
2	1	261124	R PSS, 24.8”
3	1	264048	KIT, FILLER SKIRT HARDWARE
4	1	264135	KIT, SKIRT BRACES

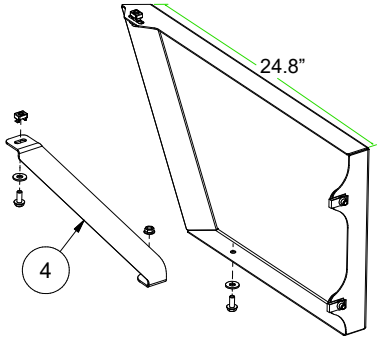

264053 PARTS LIST Rev A			
Item	Qty	Part #	DESCRIPTION
1	1	261132	R DRV, 31.8”
2	1	261133	R PSS, 31.8”
3	1	264048	KIT, FILLER SKIRT HARDWARE
4	1	264135	KIT, SKIRT BRACES

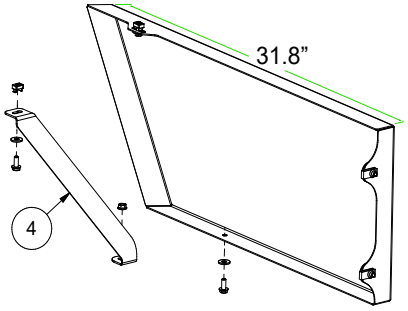

264054 PARTS LIST Rev A			
Item	Qty	Part #	DESCRIPTION
1	1	261184	R DRV, 38.9”
2	1	261185	R PSS, 38.9”
3	1	264048	KIT, FILLER SKIRT HARDWARE
4	1	264135	KIT, SKIRT BRACES

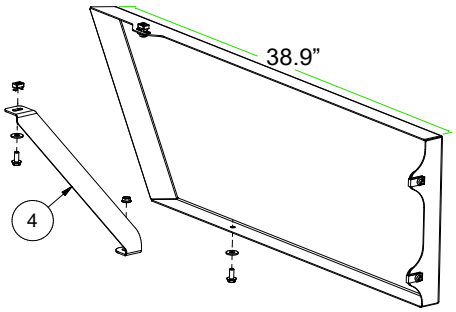

264044 REV: D

FRONT TOOLBOX INSTALL KIT

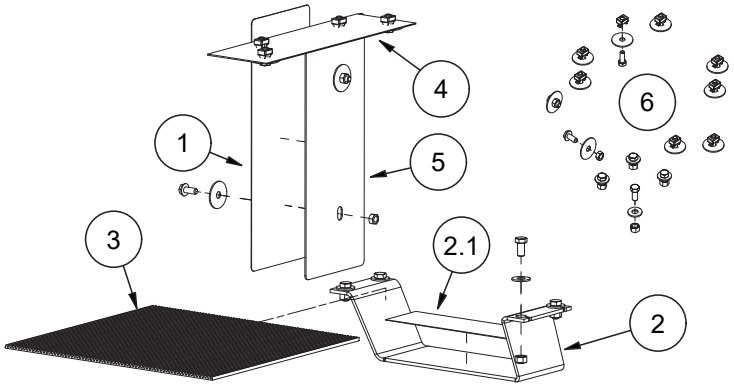

Parts List			Kit: 264044
ITEM	QTY	PART #	DESCRIPTION
1	2	202169	Decal, Chip Guard
2	2	211109	Step, Toolbox
2.1	1	215474	Traction Pad, Flex-Tread 2.75" X 0.75'
3	2	211119	Tool Box Mat
4	4	212003	Gasket, Toolbox Mount
5	2	261014	Plate, Chip Guard
6	1	264045	Kit, Toolbox Hardware, Front

264050 REV: F

REAR TOOLBOX INSTALL KIT

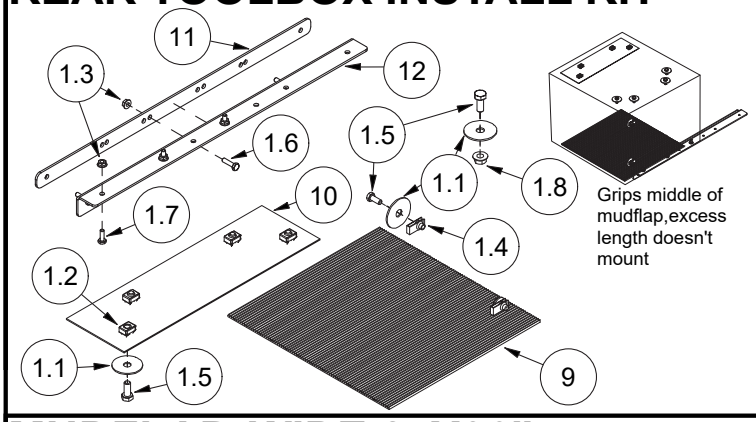

Parts List			Kit: 264050
ITEM	QTY	PART #	DESCRIPTION
1	1	264173	Hardware Kit, Toolbox Installation
1.1	20	110049	Washer, 5/16" X 1 1/2 Fender
1.2	8	110258	Nut, 5/16-18, Cage Tinnerman
1.3	12	110290	Nut, 1/4-20 Wiz Flange
1.4	4	110319	Nut, 5/16-18 U-Type .75l
1.5	20	110444	Bolt, 5/16-18 X .75 Wiz Flange
1.6	6	110464	Bolt, 1/4-20 X 1.0
1.7	6	110561	Bolt, 1/4-20 X .75
1.8	8	110606	Nut, 5/16-18 Wiz Flange
9	2	211119	Tool Box Mat
10	2	212003	Gasket, Toolbox Mount
11	2	261011	Backer Plate, Long
12	2	261203	Bracket, Mudflap, Wide

264040 REV: A

MUDFLAP, WIDE 24X36”

Mudflaps still mount to stringer (above toolbox)

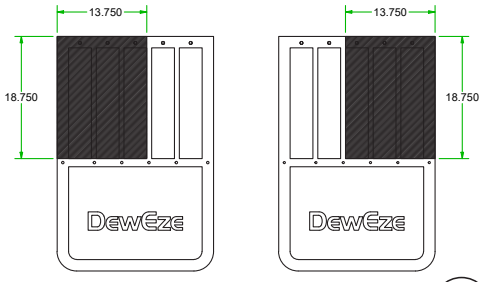

Cut and remove shaded areas for rear toolboxes

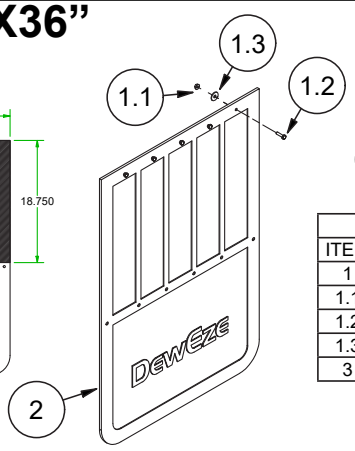



Parts List			
ITEM	QTY	PART #	DESCRIPTION
1	1	205456	KIT, BOLT MUDFLAP
1.1	10	110290	NUT, 1/4-20 WIZ FLANGE
1.2	10	110464	BOLT, 1/4-20 X 1.0
1.3	10	111033	WASHER, 1/4" X 1" OD, PLAIN
3	2	262001	MUDFLAP, WIDE

264041 REV: A

MUDFLAP, NARROW 20X36”

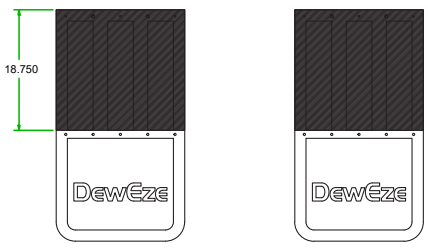

Cut and remove shaded areas for rear toolboxes

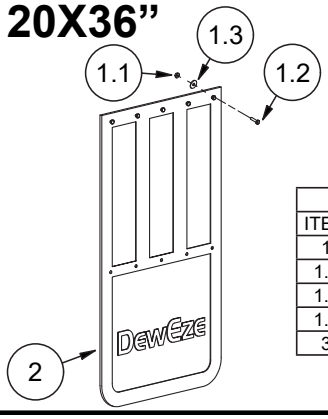

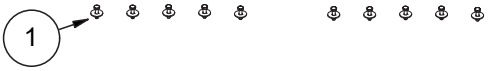

Parts List			
ITEM	QTY	PART #	DESCRIPTION
1	1	205456	KIT, BOLT MUDFLAP
1.1	10	110290	NUT, 1/4-20 WIZ FLANGE
1.2	10	110464	BOLT, 1/4-20 X 1.0
1.3	10	111033	WASHER, 1/4" X 1" OD, PLAIN
3	2	262002	MUDFLAP, NARROW

RT DECALS

SAFETY WARNING!

It is the owner's responsibility to replace missing or damaged warning decals. Decals are available from your Deweze dealer.

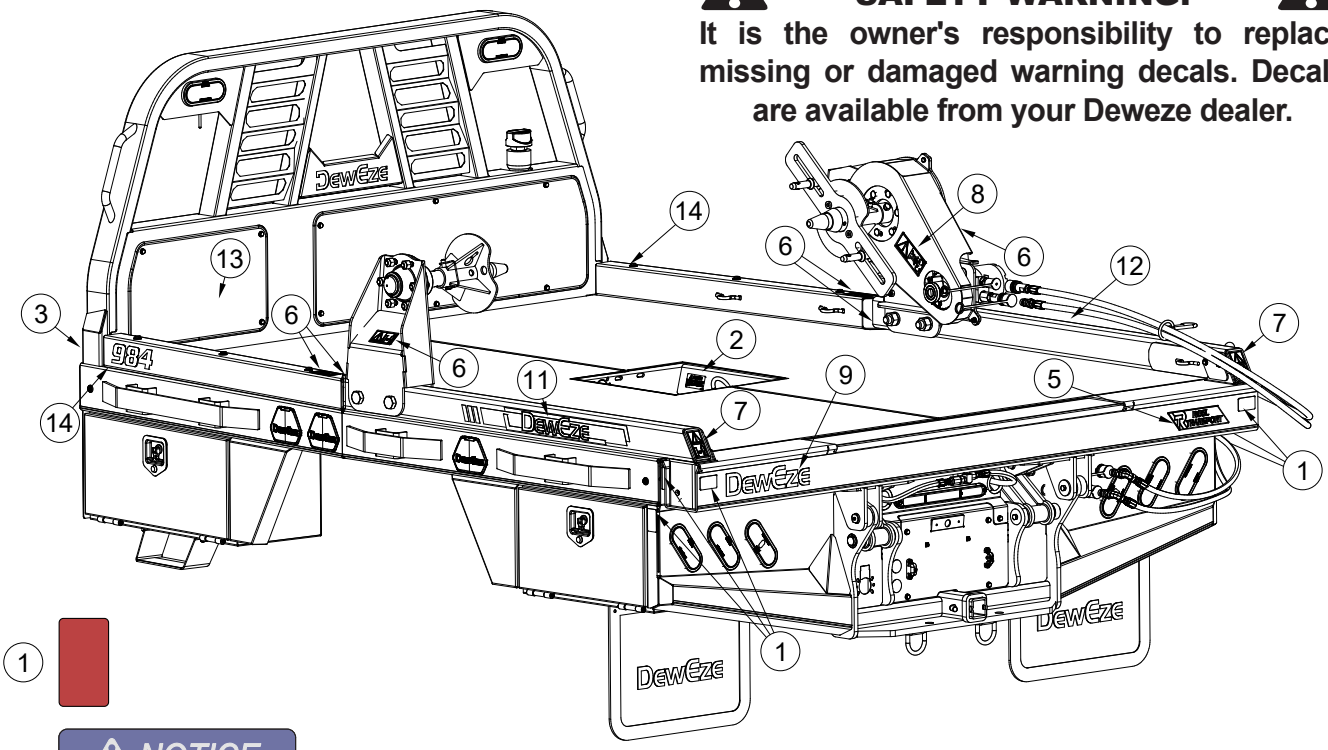

1

2

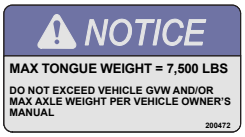

3

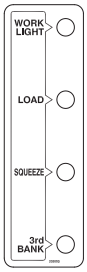

4



5



6



7



8



9



10

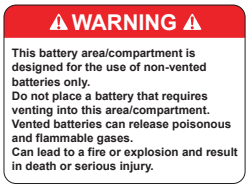

11



12



13

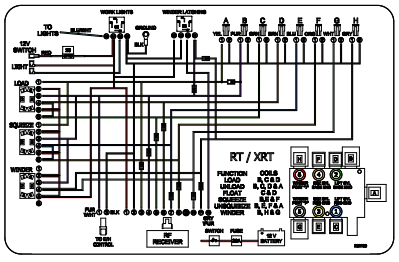

14



ITEM	QTY	PART #
876	2	202170
879	2	202182
976	2	202171
984	2	202172
988	2	202183

ITEM	QTY	PART #	DESCRIPTION
1	6	200190	Decal, Red Reflector, Rectangle
2	1	200472	Decal, Gooseneck Tongue Weight
3	1	202003	Decal, Switch Identification
4	40"	202093	Pinstripe, -40 Warm Silver
5	1	202117	Decal, "RT Reel Transport"
6	6	202144	Decal, Safe Distance, Horizontal
7	2	202145	Decal, Safe Distance, Vertical
8	2	202146	Decal, Do Not Remove Shield
9	1	202175	Decal, Deweze
10	1	202180	E/H Decal, Non-Vented Battery Warning
11	1	202184	Decal, "Deweze" Arm, DRV
12	1	202185	Decal, "Deweze" Arm, PASS
13	1	202189	Decal, Wiring Diagram, RT/XRT Valve
14	2	See Chart	Decal, Model Numbers

XRT DECALS

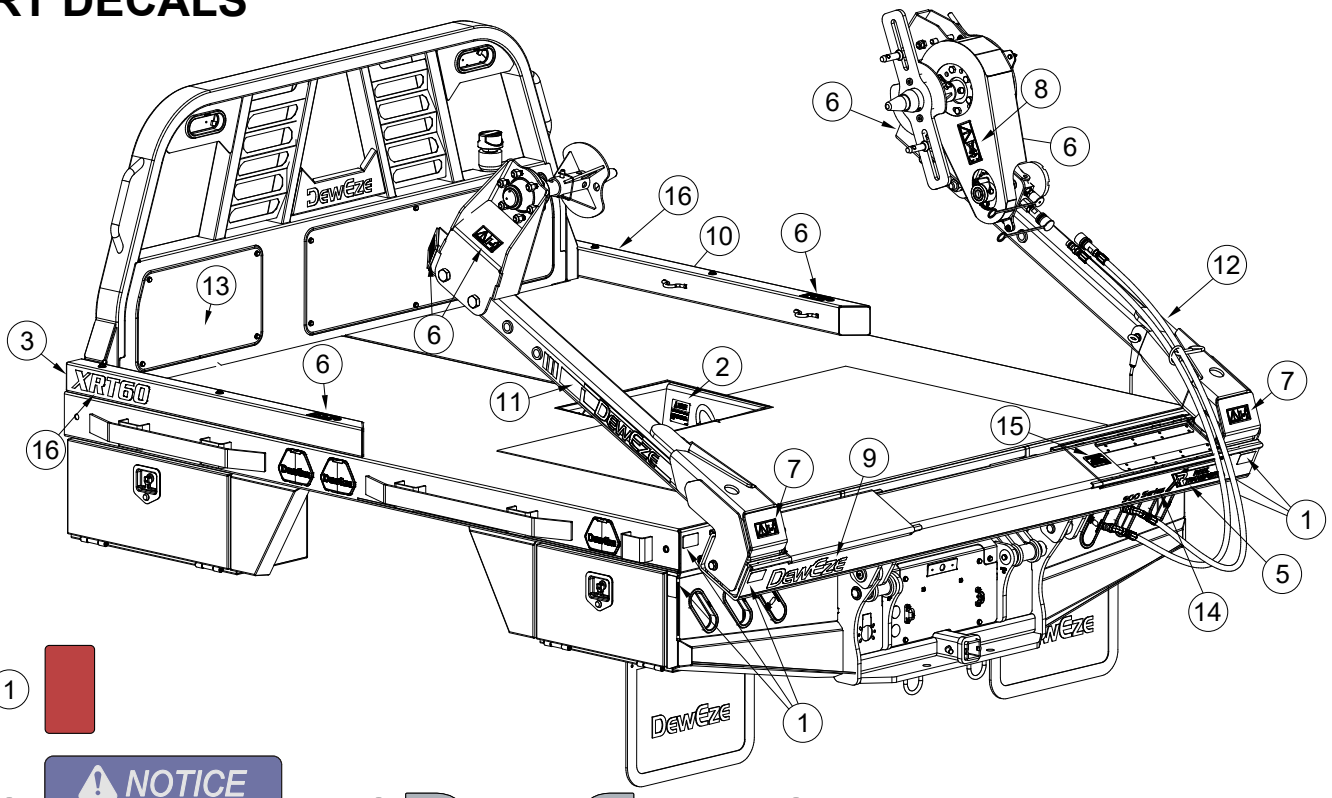

1

2
NOTICE
MAX TONGUE WEIGHT = 7,500 LBS
DO NOT EXCEED VEHICLE GVW AND/OR MAX AXLE WEIGHT PER VEHICLE OWNER'S MANUAL
200472

3
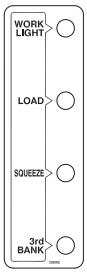

4

5
REEL TRANSPORT

6

7

8

9 DewEze

10
WARNING
This battery area/compartment is designed for the use of non-vented batteries only.
Do not place a battery that requires venting into this area/compartment.
Vented batteries can release poisonous and flammable gases.
Can lead to a fire or explosion and result in death or serious injury.

11 DewEze

12 DewEze

13
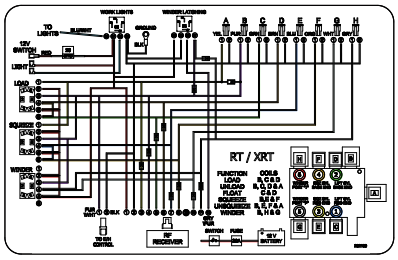

14 900 Series

15
WARNING
SHIELD HAS BEEN REMOVED!
REPLACE PRIOR TO MACHINE OPERATION
400014

16 XRT

ITEM	QTY	PART #
XRT 60	2	202176
XRT 84	2	202177

ITEM	QTY	PART #	DESCRIPTION
1	6	200190	Decal, Red Reflector, Rectangle
2	1	200472	Decal, Gooseneck Toungue Weight
3	1	202003	Decal, Switch Identification
4	37'	202093	Pinstripe, -40 Warm Silver
5	1	223096	Decal, XRT Reel Transport
6	6	202144	Decal, Safe Distance, Horizontal
7	2	202145	Decal, Safe Distance, Vertical
8	2	202146	Decal, Do Not Remove Shield
9	1	202175	Decal, Deweze
10	1	202180	E/H Decal, Non-Vented Battery Warning
11	1	202184	Decal, "Deweze" Arm, DRV
12	1	202185	Decal, "Deweze" Arm, PASS
13	1	202189	Decal, Wiring Diagram, RT/XRT Valve
14	1	202193	Decal, 900 Series
15	2	400014	Decal, Shield Removed Warning
16	2	See Chart	Decal, Model Numbers

205477	REV:	205287	REV: A	275047	REV:

RT & XRT ARBOR ASSEMBLY 73" & 98"

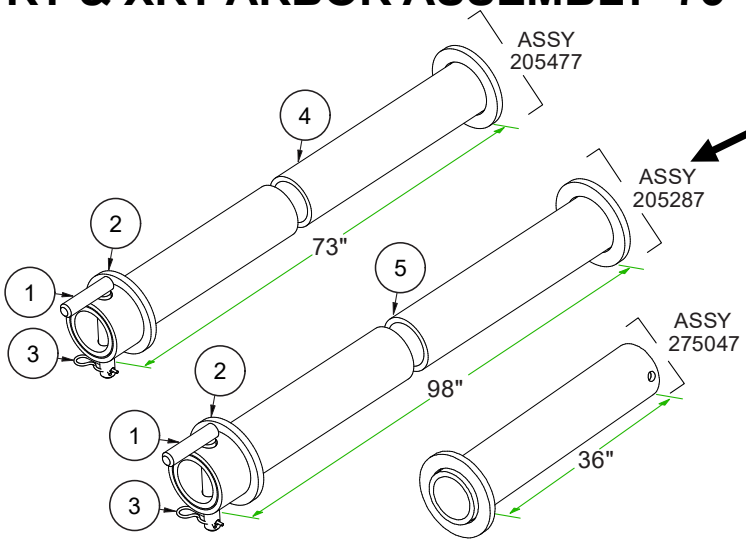

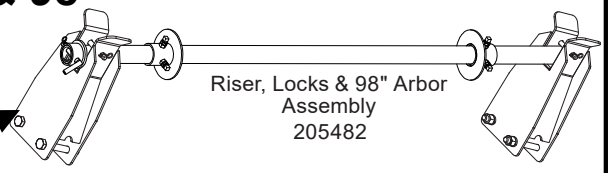

Parts List			
ITEM	QTY	PART #	DESCRIPTION
1	1	211172	Weldment, Pin, Reel Transport
2	1	275034	Weldment, Arbor Retainer
3	1	500156	Pin, Hairpin Cotter, 1/8 X 2.375
4	1	215456	Weldment, XRT, Arbor
5	1	215070	Weldment, Shaft, Reel Carrier
	1	205477	73" Arbor Assembly
	1	205287	98" Arbor Assembly
	1	275047	36" RT Narrow Spool Arbor Adapter

205418	REV:

RT & XRT RISER ASSEMBLY

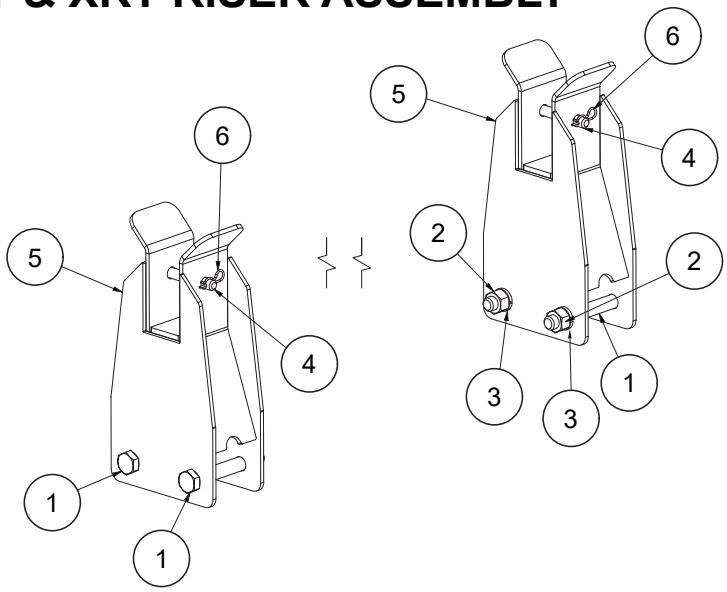

Parts List			
ITEM	QTY	PART #	DESCRIPTION
1	4	110364	Bolt, 1-8 X 7.0
2	4	110601	Nut, 1-8
3	4	110649	Washer, 1" Lock
4	2	211172	Weldment, Pin, Reel Transport
5	2	215454	Weldment, XRT Riser
6	2	500156	Pin, Hairpin Cotter, 1/8 X 2.375
	1	205418	RT Riser Assembly

205282	REV:

RT & XRT ARBOR LOCKS

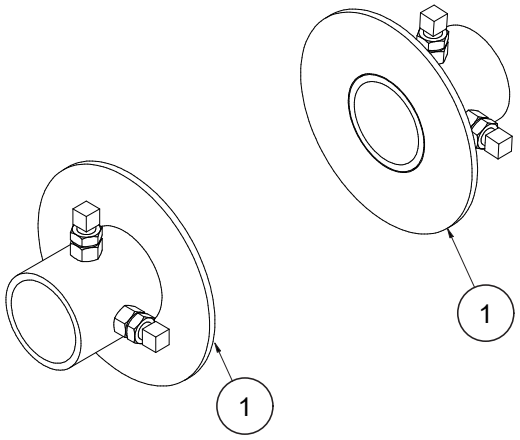

Parts List			
ITEM	QTY	PART #	DESCRIPTION
1	2	275024	Weldment, Arbor Lock, 3"
		205282	RT Arbor Locks (Pair)

RT & XRT SPINNER & RISER ASSEMBLY (PAIR)

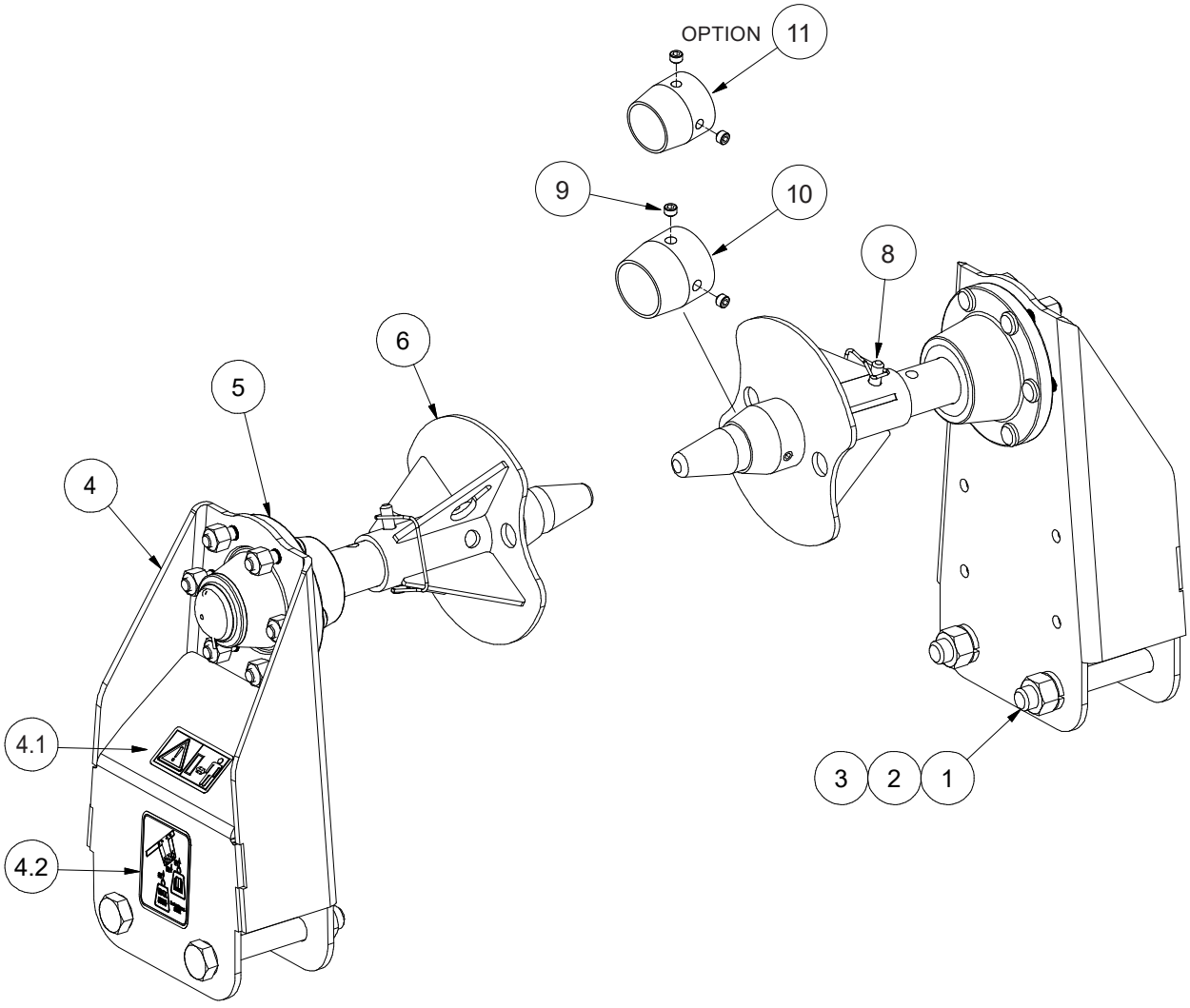

Parts List			
ITEM	QTY	PART #	DESCRIPTION
1	4	110364	Bolt, 1-8 X 7.0
2	4	110601	Nut, 1-8
3	4	110649	Washer, 1" Lock
4	2	205413	RT & XRT Spindle Riser
4.1	1	202144	Decal, Safe Distance, Horizontal
4.2	1	202190	Decal, Riser Position & Weight
5	2	214004	Spindle & Hub Assembly, RT & XRT
6	2	214010	Spinner Assembly, RT & XRT
8	2	102124	Pin, Lock, .50 x 3, Grade 8, Single Wire
9	4	111174	SetScrew, 1/2-13 X 0.375
10	2	270032	Centering Cone, 3" (Large)
11	Kit	205479	Centering Cones, 2.625" (Small)
12	Kit	205412	Spinner & Riser Assembly (Pair)

RT & XRT SPINDLE & HUB ASSEMBLY

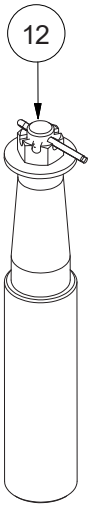

Wheel Spindle Assy	
410512	1ea. (1), 1ea. (2), 1ea. (5), 1ea. (11)

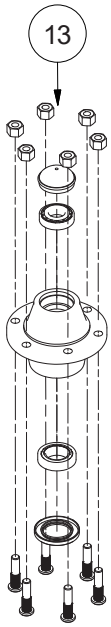

Wheel Spindle Assy	
413001	6ea. (3), 6ea. (4), 1ea. (6), 1ea. (8), 1ea. (9), 1ea. (10)

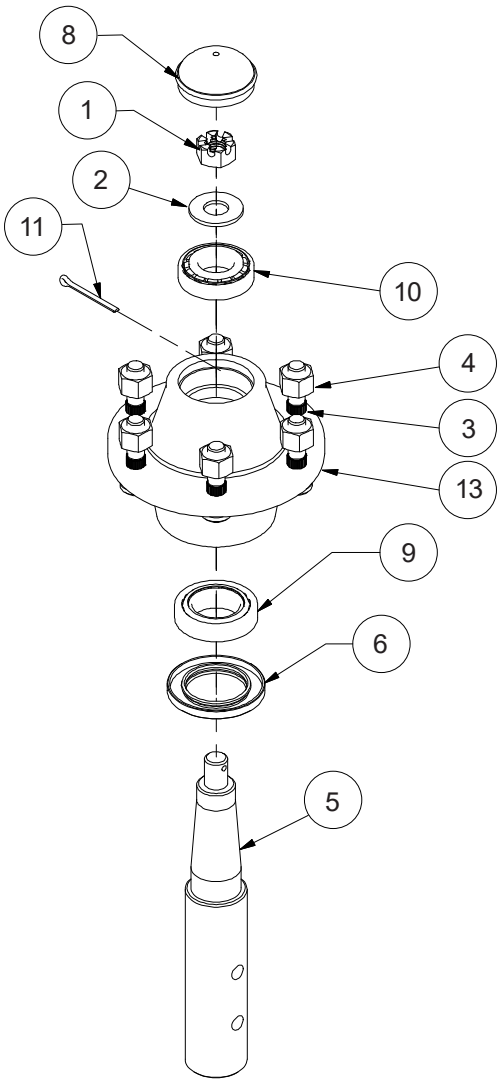

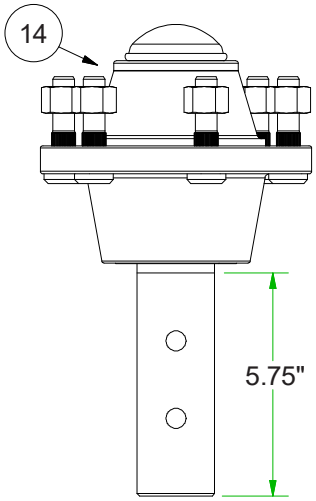

NOTE: While rotating the hub to ensure proper seating of the rollers, induce preload by using a torque wrench to tighten the adjusting nut to 50 foot pounds. Then loosen the adjusting nut one full turn. While continuing to rotate the hub, re-torque the nut, this time to 10 foot pounds. Once again, loosen the adjusting nut, until the next castle opening and hole line up. Properly install and secure the cotter pin to prevent the nut from backing off.

NOTE: Pack bearing cones and lubricate seal lip with grease before assembly.

Parts List			
ITEM	QTY	PART #	DESCRIPTION
1	1	110613	Nut, Castle 3/4 - 16
2	1	111230	Washer, 3/4" Flat Standard Gr 8
3	6	113006	Stud, 9/16-18
4	6	113007	Nut, 9/16-18
5	1	410040	Spindle 35-6LM-S
6	1	410105	Seal
8	1	410112	Dust Cap
9	1	410114	Inner Bearing 2.891 x .58
10	1	410115	Outer Bearing 2.328 x. 465
11	1	510175	Cotter Pin, 3/16 x 2
12	Kit	410512	Wheel Spindle ASSY
13	Kit	413001	Hub ASSY
14	Kit	214004	Spindle & Hub ASSY

RT WINDER

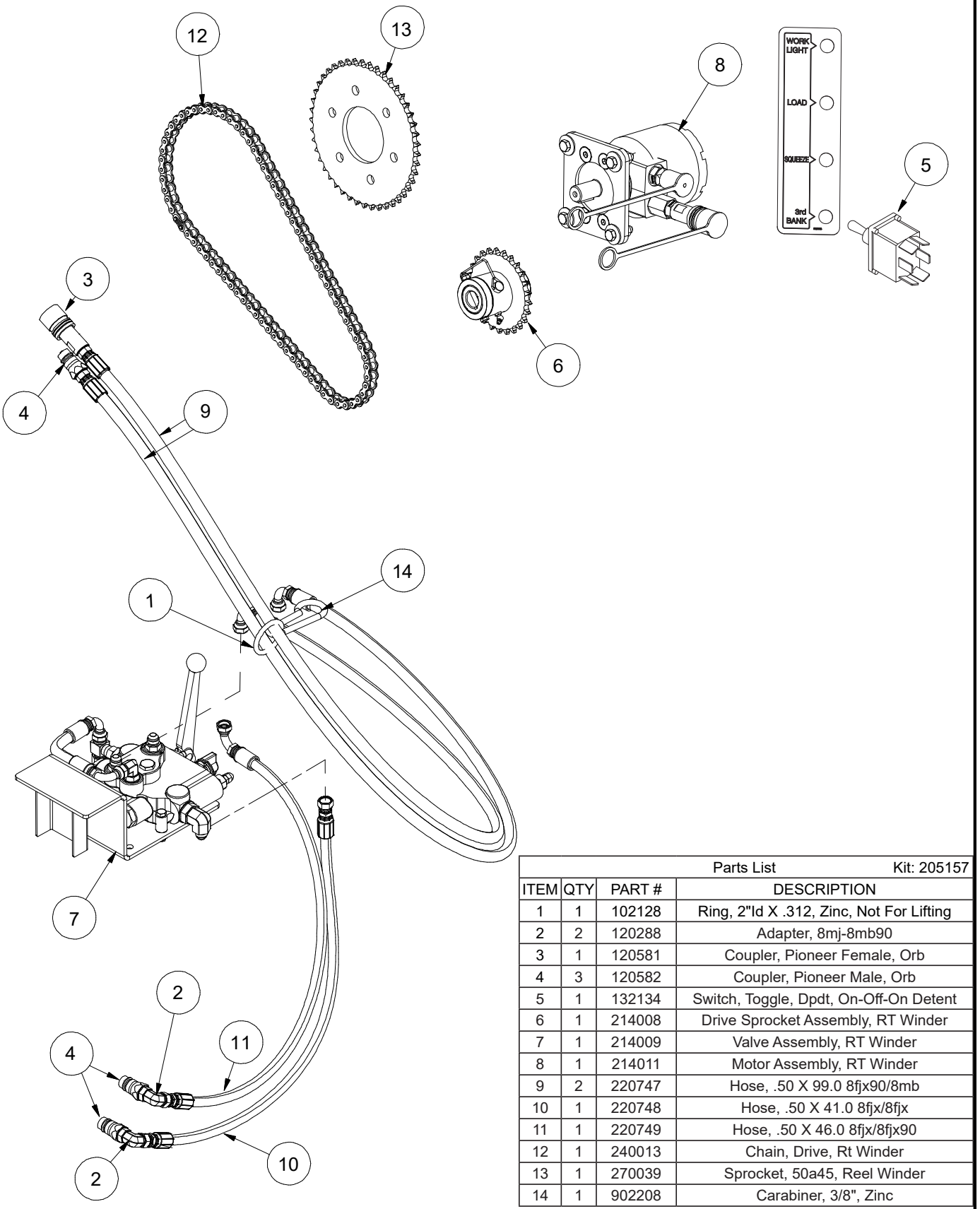

Parts List			Kit: 205157
ITEM	QTY	PART #	DESCRIPTION
1	1	102128	Ring, 2"Id X .312, Zinc, Not For Lifting
2	2	120288	Adapter, 8mj-8mb90
3	1	120581	Coupler, Pioneer Female, Orb
4	3	120582	Coupler, Pioneer Male, Orb
5	1	132134	Switch, Toggle, Dpdt, On-Off-On Detent
6	1	214008	Drive Sprocket Assembly, RT Winder
7	1	214009	Valve Assembly, RT Winder
8	1	214011	Motor Assembly, RT Winder
9	2	220747	Hose, .50 X 99.0 8fjx90/8mb
10	1	220748	Hose, .50 X 41.0 8fjx/8fjx
11	1	220749	Hose, .50 X 46.0 8fjx/8fjx90
12	1	240013	Chain, Drive, Rt Winder
13	1	270039	Sprocket, 50a45, Reel Winder
14	1	902208	Carabiner, 3/8", Zinc

XRT WINDER (DRIVER SIDE MOUNTING SHOWN)

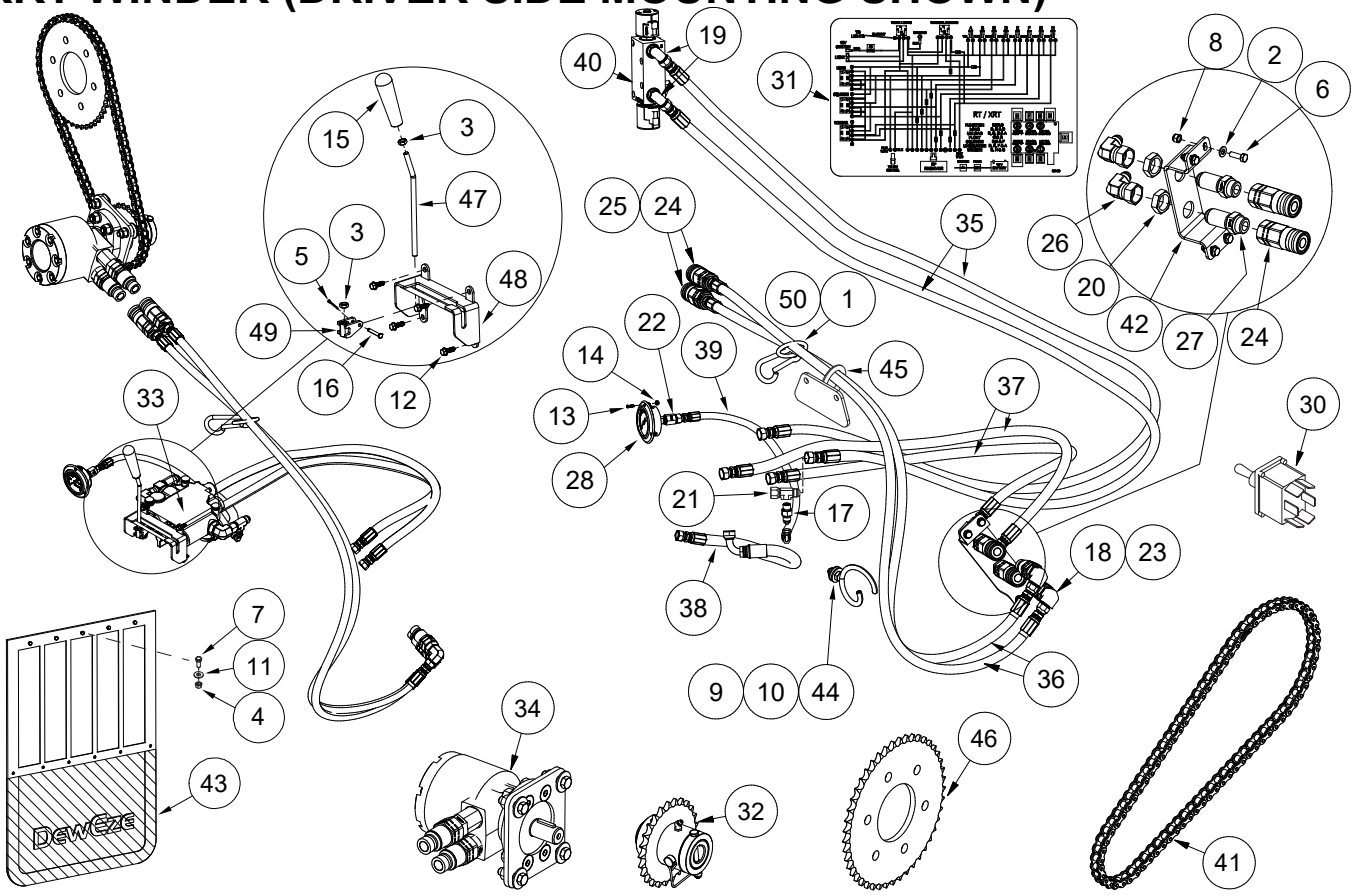

Parts List				Parts List Kit: 205487			
ITEM	QTY	PART #	DESCRIPTION	ITEM	QTY	PART #	DESCRIPTION
1	1	102128	Ring, 2"Id X .312, Zinc, Not For Lifting	26	2	120779	Adapter, 8mj-12fjx90
2	8	110069	Washer, 5/16" Flat Sae	27	2	120780	Adapter, 12mj-12mb Bulkhead
3	2	110158	Nut, 5/16-18 Jam	28	1	120781	Gauge, Flange Mount, 2.5in, 3000 Psi
4	5	110290	Nut, 1/4-20 Wiz Flange	29	1	132035	Switch Boot
5	1	110300	Cotter Pin, 3/32 X 0.75	30	1	132134	Switch, Toggle, Dpdt, On-Off-On
6	4	110423	Bolt, 5/16-18 X 1.0	31	1	202189	Decal, Wiring Diagram, Rt / Xrt Valve
7	5	110464	Bolt, 1/4-20 X 1.0	32	1	214008	Drive Sprocket Assembly, Rt
8	4	110603	Nut, 5/16-18 Lock (Nylon)	33	1	214016	Valve Assembly, Xrt Winder
9	1	110621	Nut, 3/8-16, Unitorque Lock	34	1	214019	Motor Assembly, Xrt Winder
10	2	110676	Washer, 3/8" Flat Standard	35	2	220697	Hose, .50 X 183.00, 8-8fjx
11	5	111033	Washer, 1/4" X 1" Od, Plain	36	2	220831	Hose, .50 X 81.0 8fjx/8mb
12	4	111220	Bolt, 1/4-20 X .75, Thread Cutting, SS	37	2	220832	Hose, .50 X 37.0 8fjx/8fjx
13	3	111273	Screw, 4-40 X .50, Phillip Oval Head, SS	38	1	220856	Hose Assy, .50 X 15, 8fjx/8fjx90
14	3	111274	Nut, 4-40, Nylon-Insert, Zinc	39	1	220857	Hose, .24 X 22.0 4fjx/4fjx90m
15	1	112142	Knob, Long Tapered	40	1	223045	Valve, 3rd Bank Add On (223044)
16	1	112146	Clevis Pin, 3/16" X 1.25", Zinc-Plated	41	1	240013	Chain, Drive, Rt Winder
17	1	120233	Adapter, 4mj-4mb	42	1	261425	Mounting Bracket, Ff Coupler
18	2	120246	Adapter, 8mj-12mb90	43	1	262001	Mudflap, Wide
19	2	120288	Adapter, 8mj-8mb90	44	1	265238	Hydraulic Hose Holder
20	2	120495	Nut, Bulkhead Locknut, -12	45	1	265241	XRT Hydraulic Hose Holder
21	1	120679	Adapter, 8fjx-8mj-4fb	46	1	270039	Sprocket, 50a45, Reel Winder
22	1	120704	Adapter, 4mj-4fp	47	1	270159	Valve Handle
23	2	120776	Coupler, Male Flat Face -12 Fb	48	1	275062	Weldment, Valve Eyebrow
24	4	120777	Coupler, Female Flat Face -12 Fb	49	1	275063	Weldment, Valve Handle Clevis
25	2	120778	Adapter, 12mb-8fb	50	1	902208	Carabiner, 3/8", Zinc

RT & XRT WINDER: DRIVE SPROCKET ASSEMBLY

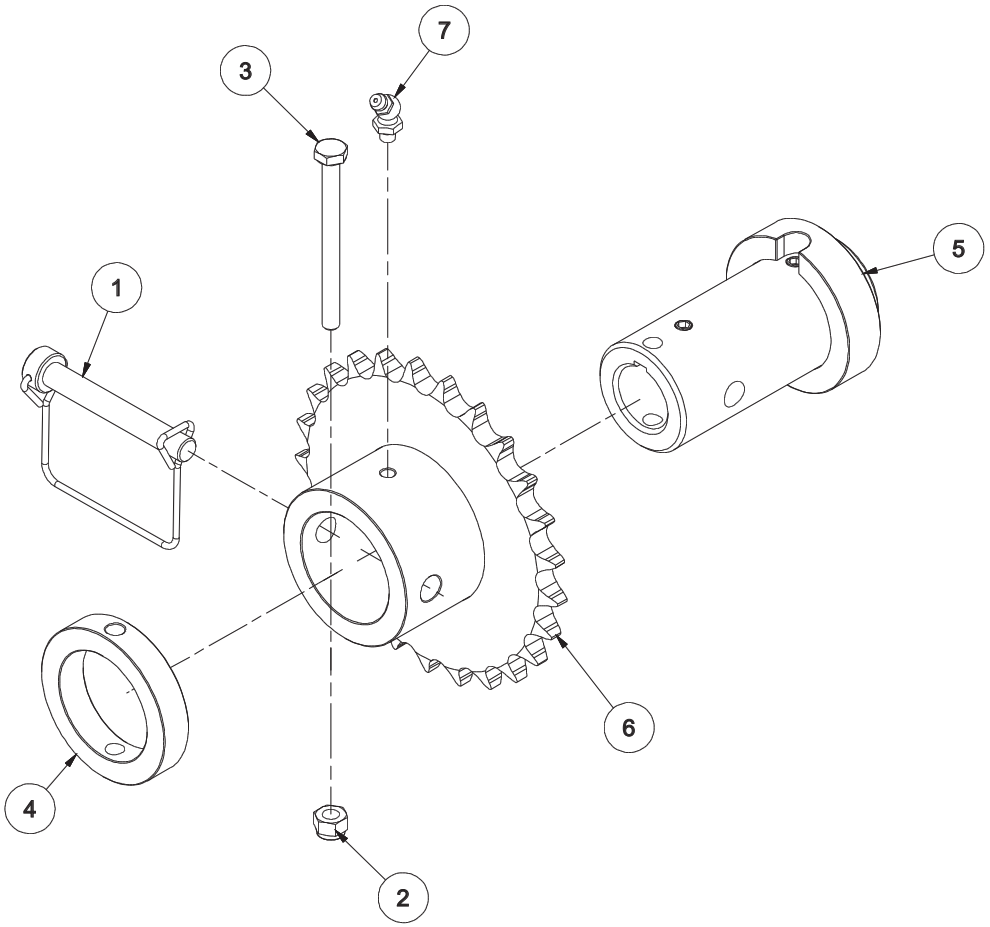

Parts List			Kit: 214008
ITEM	QTY	PART #	DESCRIPTION
1	1	102125	Pin, Lock, .375 X 2.5, Grade 8, Single Wire
2	1	110630	Nut, 1/4-20 Lock (Nylon Insert)
3	1	110844	Bolt, 1/4-20 X 3
4	1	270036	Stop Collar Outer, Drive Bushing, Rt
5	1	275022	Weldment, Rt Drive Bushing
6	1	275023	Weldment, Rt Drive Sprocket, 5025
7	1	500231	Grease Zerk, 1/4-28 45deg

214011	REV:

RT WINDER MOTOR ASSEMBLY

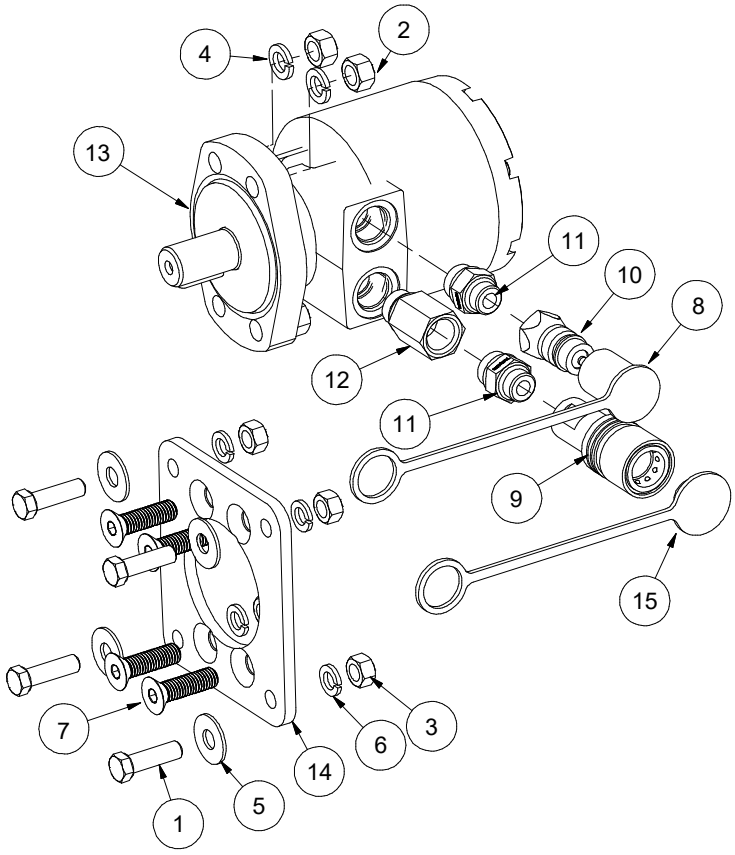

Parts List			Kit: 214011
ITEM	QTY	PART #	DESCRIPTION
1	4	110535	Bolt, 7/16-14 X 1.5
2	4	110610	Nut, 1/2-13
3	4	110641	Nut, 7/16-14
4	4	110666	Washer, 1/2" Lock
5	4	110670	Washer, 7/16" Flat Standard
6	4	110671	Washer, 7/16" Lock
7	4	111045	Bolt, 1/2-13 X 1.75 Fhcs
8	1	112127	Dust Cap, Male Pioneer
9	1	120581	Coupler, Pioneer Female, Orb
10	1	120582	Coupler, Pioneer Male, Orb
11	2	120735	Adapter, 10mb-8mb
12	1	120738	Adapter, 10mb-10fb, Extender
13	1	222065	Motor, Hydraulic, 15.68ci
14	1	270033	Mounting Plate, Rt Motor
15	1	420051	Dust Plug, Pioneer Coupler

214019	REV:

XRT WINDER MOTOR ASSEMBLY

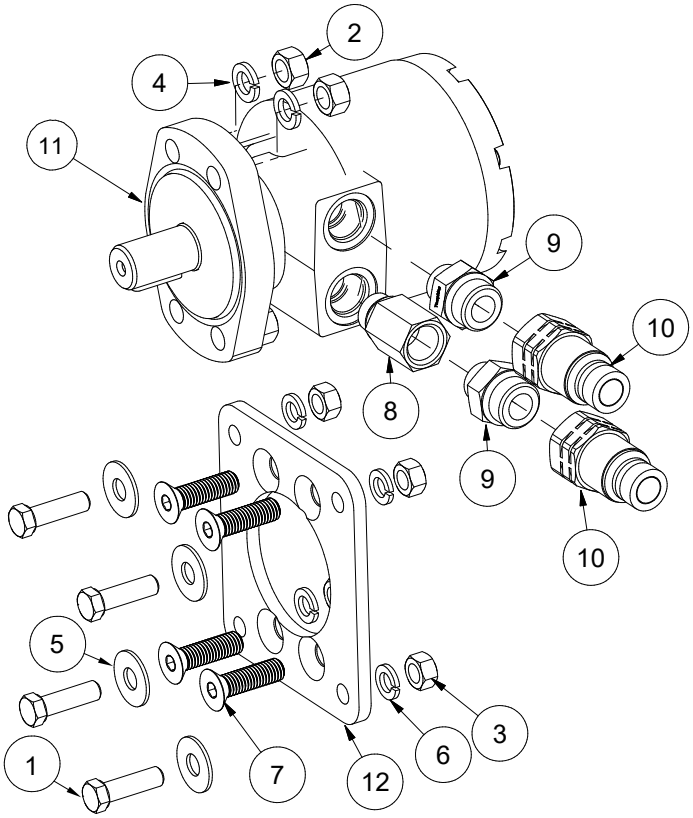

Parts List			Kit: 214019
ITEM	QTY	PART #	DESCRIPTION
1	4	110535	BOLT, 7/16-14 X 1.5
2	4	110610	NUT, 1/2-13
3	4	110641	NUT, 7/16-14
4	4	110666	WASHER, 1/2" LOCK
5	4	110670	WASHER, 7/16" FLAT STANDARD
6	4	110671	WASHER, 7/16" LOCK
7	4	111045	Bolt, 1/2-13 x 1.75 FHCS
8	1	120738	Adapter, 10mb-10fb, Extender
9	2	120775	Adapter, 12mb-10mb
10	2	120776	Coupler, Male Flat Face -12 FB
11	1	222065	Motor, Hydraulic, 15.68ci
12	1	270033	Mounting Plate, RT Motor

214009	REV:

RT WINDER: VALVE ASSEMBLY

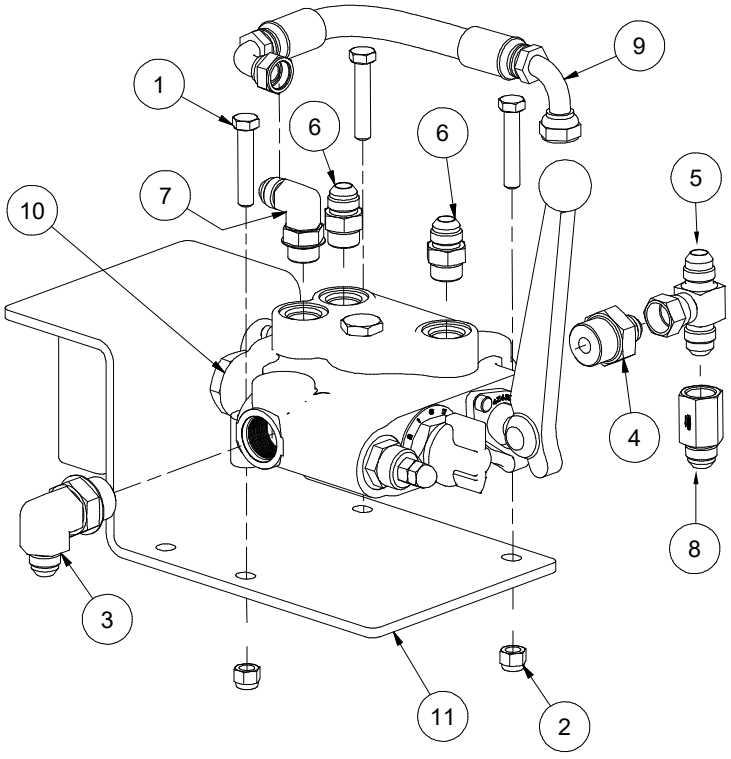

Parts List			Kit: 214009
ITEM	QTY	PART #	DESCRIPTION
1	3	110400	Bolt, 3/8-16 X 2.0
2	3	110618	Nut, 3/8-16 Lock Nylon Insert
3	1	120246	Adapter, 8mj-12mb90
4	1	120252	Adapter, 8mj-12mb
5	1	120270	Adapter, 8mj-8mj-8fjx
6	2	120277	Adapter, 8mj-8mb
7	1	120288	Adapter, 8mj-8mb90
8	1	120535	Valve, Check, 8fj-8mj
9	1	220746	Hose, .50 X 10.0 8fjx90/8fjx90
10	1	223072	Valve, Spool, 1 Bank W/Flow Control
11	1	275021	Weldment, Rt Valve Mount, Stake Pocket

214016	REV:

XRT WINDER: VALVE ASSEMBLY

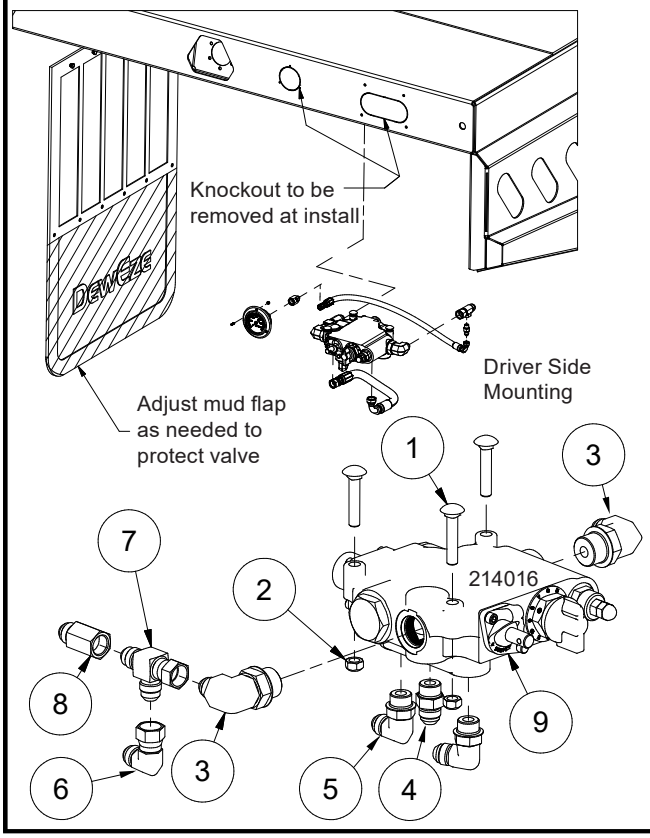

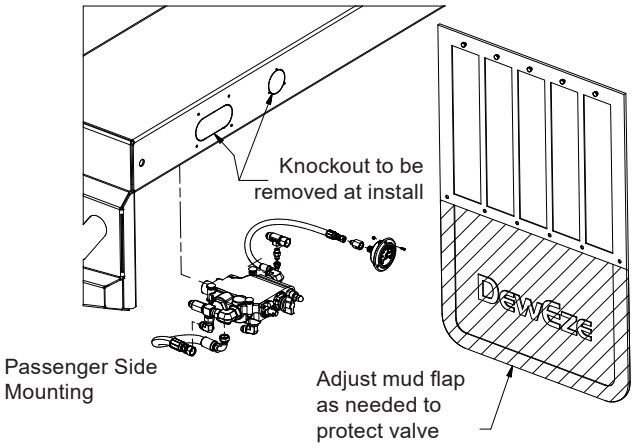

Parts List			Kit: 214016
ITEM	QTY	PART #	DESCRIPTION
1	3	110392	Bolt, 3/8-16 X 2 In Carriage
2	3	110621	Nut, 3/8-16, Unitorque Lock
3	2	120246	Adapter, 8mj-12mb90
4	1	120277	Adapter, 8mj-8mb
5	2	120288	Adapter, 8mj-8mb90
6	1	120368	Adapter, 8mj-8fjx90
7	1	120427	Adapter, 8mj-8fjx-8mj
8	1	120535	Valve, Check, 8fj-8mj
9	1	223107	Valve, Spool,1Bnk W/Flow Control, No Handle

205285 REV:

RT PRESSURE GUAGE OPTION

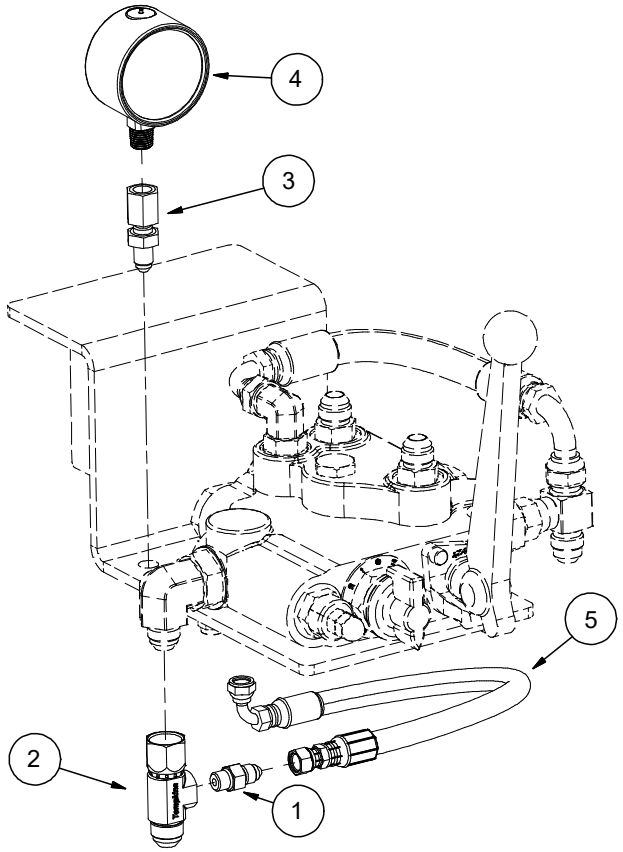

Parts List			Kit: 205285
ITEM	QTY	PART #	DESCRIPTION
1	1	120233	ADAPTER, 4MJ-4MB
2	1	120679	Adapter, 8FJX-8MJ-4FB
3	1	120736	Adapter, 4mj-4fp, Bulkhead, w/LN
4	1	120737	Pressure Gauge, 2.5in, 3000 psi
5	1	220750	Hose, .24 x 14.0 4fjx/4fjx90m

120781 REV:

XRT PRESSURE GUAGE

GAUGE PRESSURE READING RANGE: 0-3,000 PSI
GAUGE MUST WITHSTAND PRESSURE SPIKES UP TO 3,300 PSI
MAX WORKING PRESSURE: 2,900 PSI

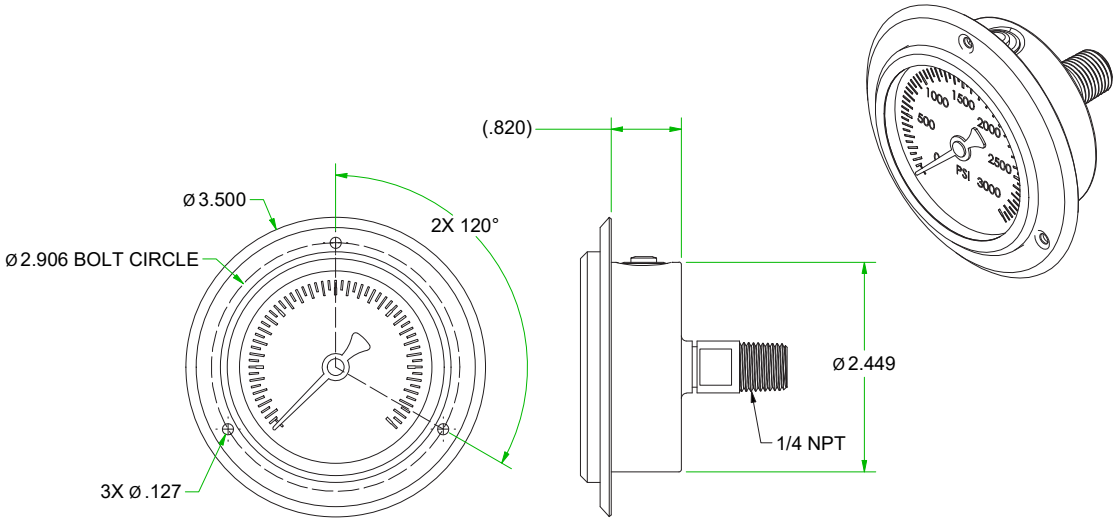

205500 REV:

RT & XRT BRAKE MOUNT NO POWER (PSS MOUNT)

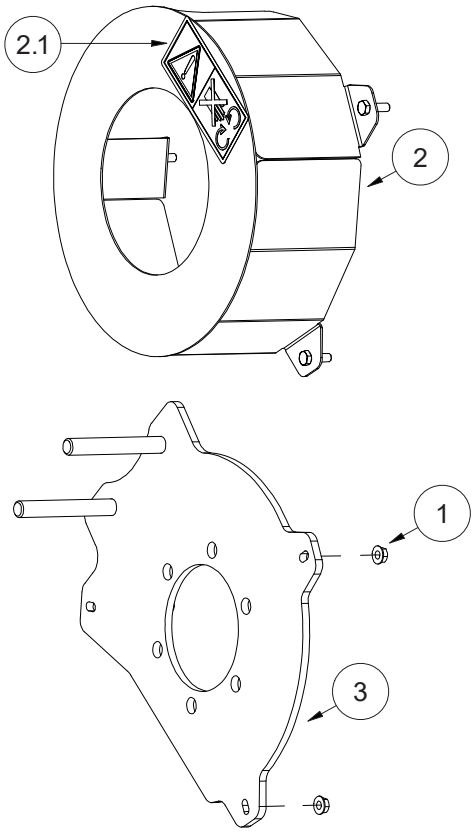

Parts List			Kit: 205500
ITEM	QTY	PART #	DESCRIPTION
1	3	110606	Nut, 5/16-18 Wiz Flange
2	1	205284	RT & XRT Brake Shield RHD
2.1	1	202146	Decal, Do Not Remove Shield, 5.50 X 2.50
3	1	275025	RT & XRT Brake Mount RHD

205499 REV:

XRT BRAKE MOUNT NO POWER (DRV MOUNT)

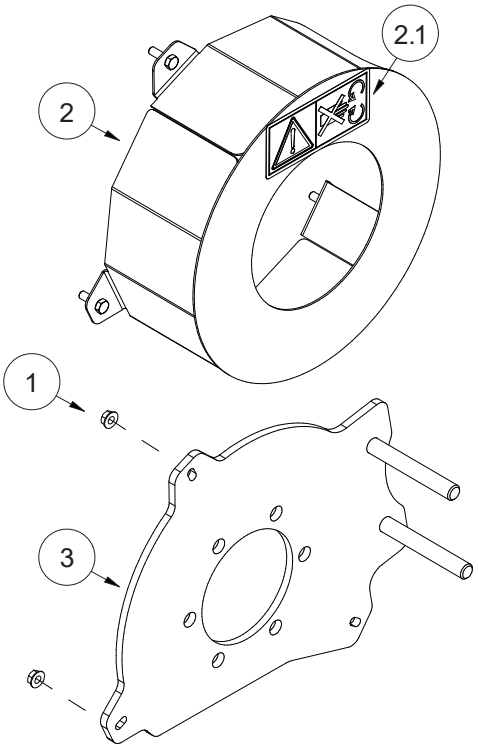

Parts List			Kit: 205499
ITEM	QTY	PART #	DESCRIPTION
1	3	110606	Nut, 5/16-18 Wiz Flange
2	1	205496	XRT Brake Shield LHD
2.1	1	202146	Decal, Do Not Remove Shield, 5.50 X 2.50
3	1	265214	XRT Brake Mount LHD

205502 REV:

RT & XRT BRAKE MOUNT POWERED (PSS MOUNT)

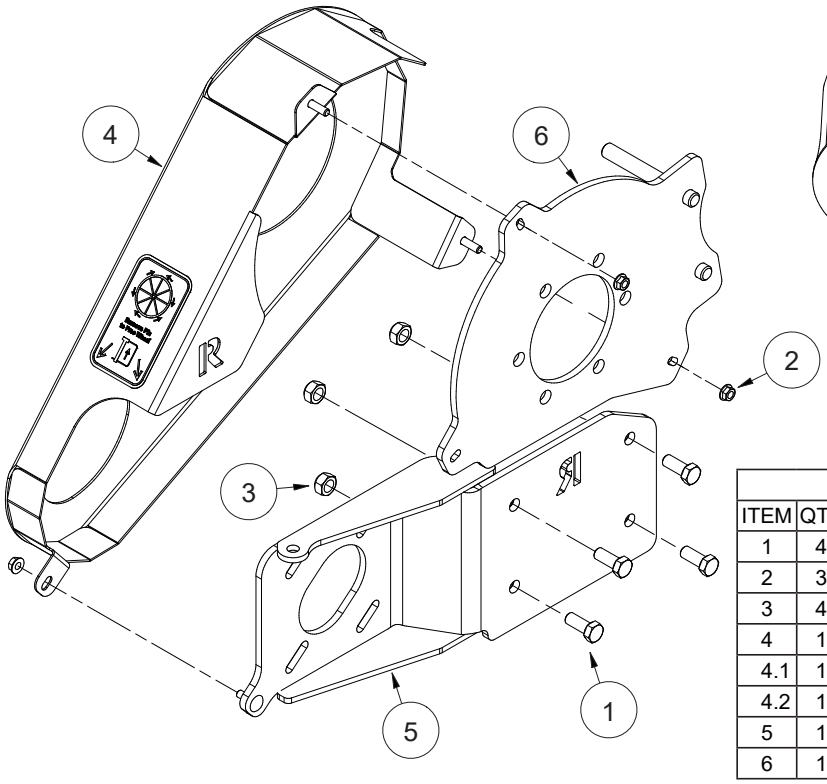

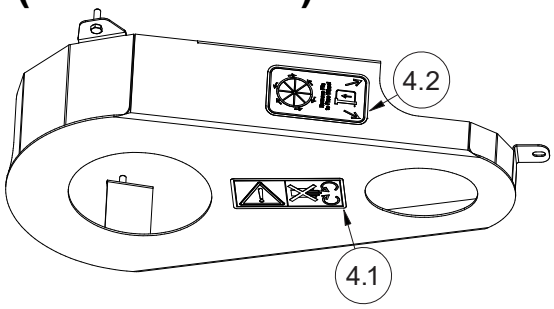

Parts List			Kit: 205502
ITEM	QTY	PART #	DESCRIPTION
1	4	110442	Bolt, 1/2-13 X 1.25
2	3	110606	Nut, 5/16-18 Wiz Flange
3	4	110615	Nut, 1/2-13, Unitorque Lock
4	1	205283	XRT Chain Shield, RHD,
4.1	1	202146	Decal, Do Not Remove Shield
4.2	1	202194	Decal, Free Rotation, L/R
5	1	275014	RT Drive Mount RHD
6	1	275025	RT Brake Mount RHD

205501 REV:

XRT BRAKE MOUNT POWERED (DRV MOUNT)

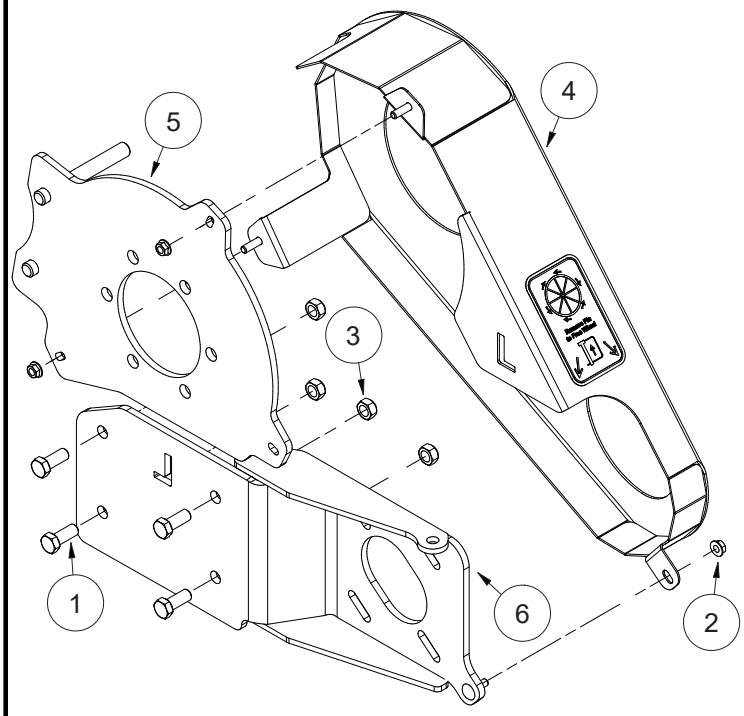

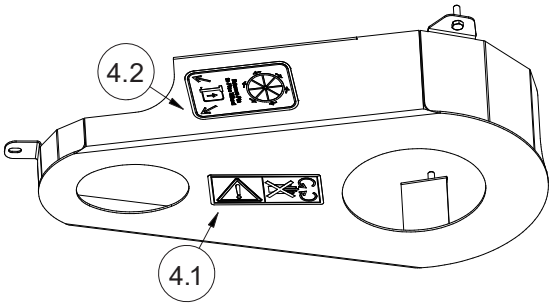

Parts List			Kit: 205501
ITEM	QTY	PART #	DESCRIPTION
1	4	110442	Bolt, 1/2-13 X 1.25
2	3	110606	Nut, 5/16-18 Wiz Flange
3	4	110615	Nut, 1/2-13, Unitorque Lock
4	1	205488	XRT Chain Shield, LHD,
4.1	1	202146	Decal, Do Not Remove Shield
4.2	1	202194	Decal, Free Rotation, L/R
5	1	265214	RT Brake Mount LHD
6	1	265215	RT Drive Mount LHD

RT & XRT BRAKE

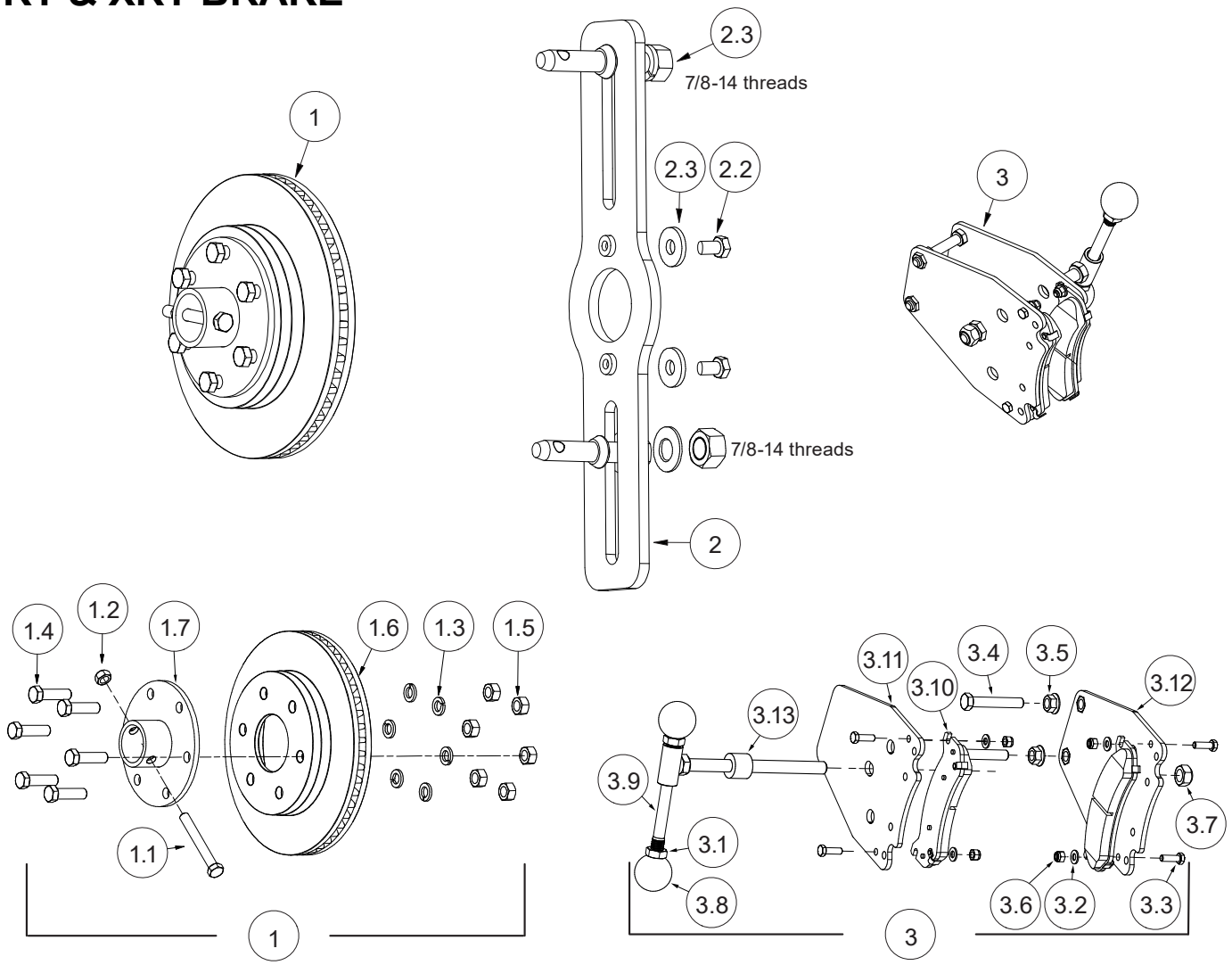

Parts List			
ITEM	QTY	PART #	DESCRIPTION
1	1	214005	Brake Rotor Assembly
1.1	1	110564	Bolt, 1/2-13 X 4, Gr8
1.2	1	110615	Nut, 1/2-13, Unitorque Lock
1.3	6	110937	Washer, M14 Lock
1.4	6	111177	Hex Cap 9-16x2 Unc
1.5	6	111178	Nut, 9/16-12, Gr 5, Zinc
1.6	1	242011	Brake Rotor, Rt
1.7	1	275018	Weldment, Disc Brake Rotor Mount
2	1	214007	Anti Spin Bar Assembly
2.1	2	110086	Bolt, 1/2-13 X 1.0
2.2	2	110660	Washer, 1/2" Flat Special 1 1.5od
2.3	2	910002	3-Point Pin W/ Hardware

Parts List Kit: 205486			
ITEM	QTY	PART #	DESCRIPTION
3	1	214017	Brake Pad Holder Assembly
3.1	2	110039	NUT, 5/8-11 JAM
3.2	4	110069	WASHER, 5/16" FLAT SAE
3.3	4	110423	BOLT, 5/16-18 X 1.0
3.4	2	110428	BOLT, 1/2-13 X 3.0
3.5	2	110588	NUT, 1/2-13 WIZ FLANGE
3.6	4	110603	NUT, 5/16-18 LOCK (NYLON)
3.7	1	111266	Nut, 5/8-18, Lock Automation Gr C, Zinc
3.8	2	111277	Knob, Ball, 5/8-11
3.9	1	111278	Stud, 5/8-11 x 8.0, Stainless
3.1	2	242012	Brake Pad, RT
3.11	1	261410	Brake Pad Holder, Outer
3.12	1	265218	Weldment, XRT Brake Pad Holder
3.13	1	265219	Weldment, XRT Brake Handle

205378 REV:

RT DUMP BOX

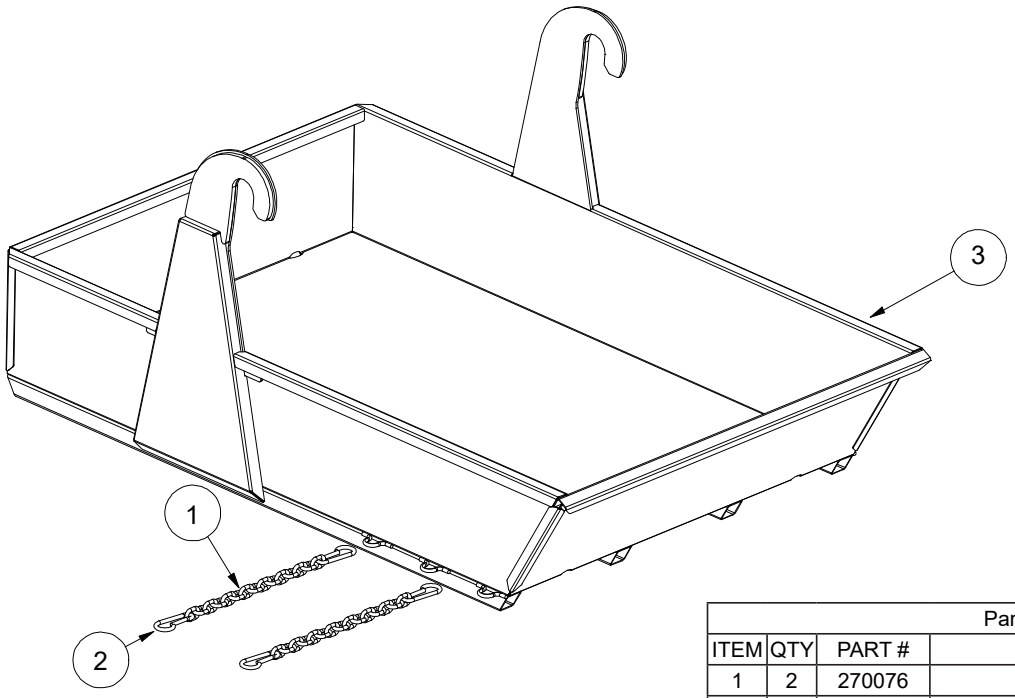

Parts List			Kit: 205378
ITEM	QTY	PART #	DESCRIPTION
1	2	270076	Chain, 3/8 Coil, 15 Links
2	4	902208	Carabiner, 3/8", Zinc
3	Kit	205378	RT Dump Box Assy

205383 REV: B

RT DUMP BOX SPINNER

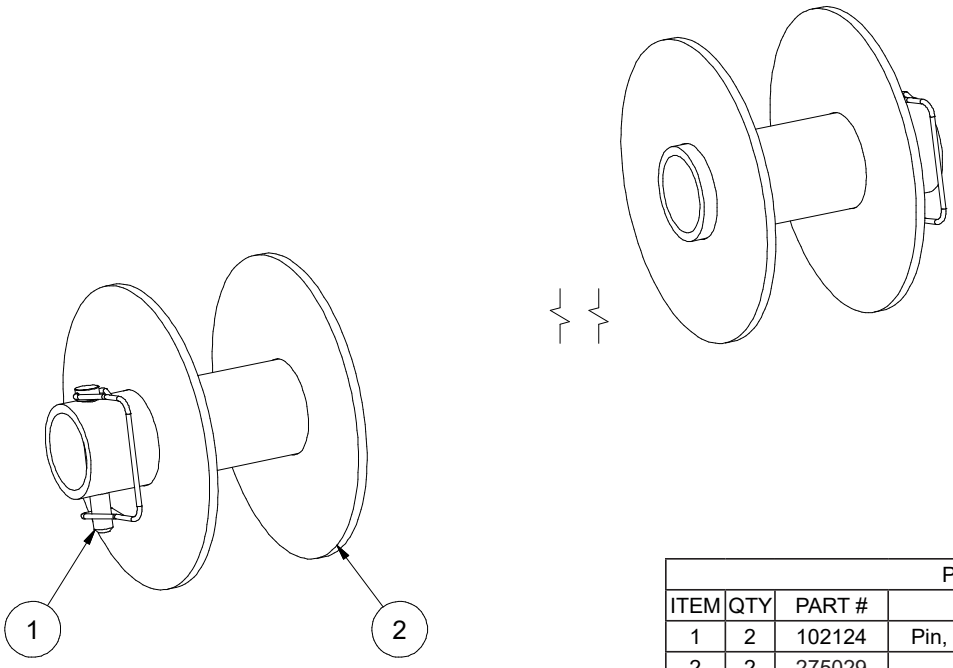

Parts List			
ITEM	QTY	PART #	DESCRIPTION
1	2	102124	Pin, Lock, .50 x 3, Grade 8, Single Wire
2	2	275029	Single, RT Dump Box Spinner
	Kit	205383	RT Dump Box Spinners Assembly

REAR VIEW CAMERA MOUNTING KITS *

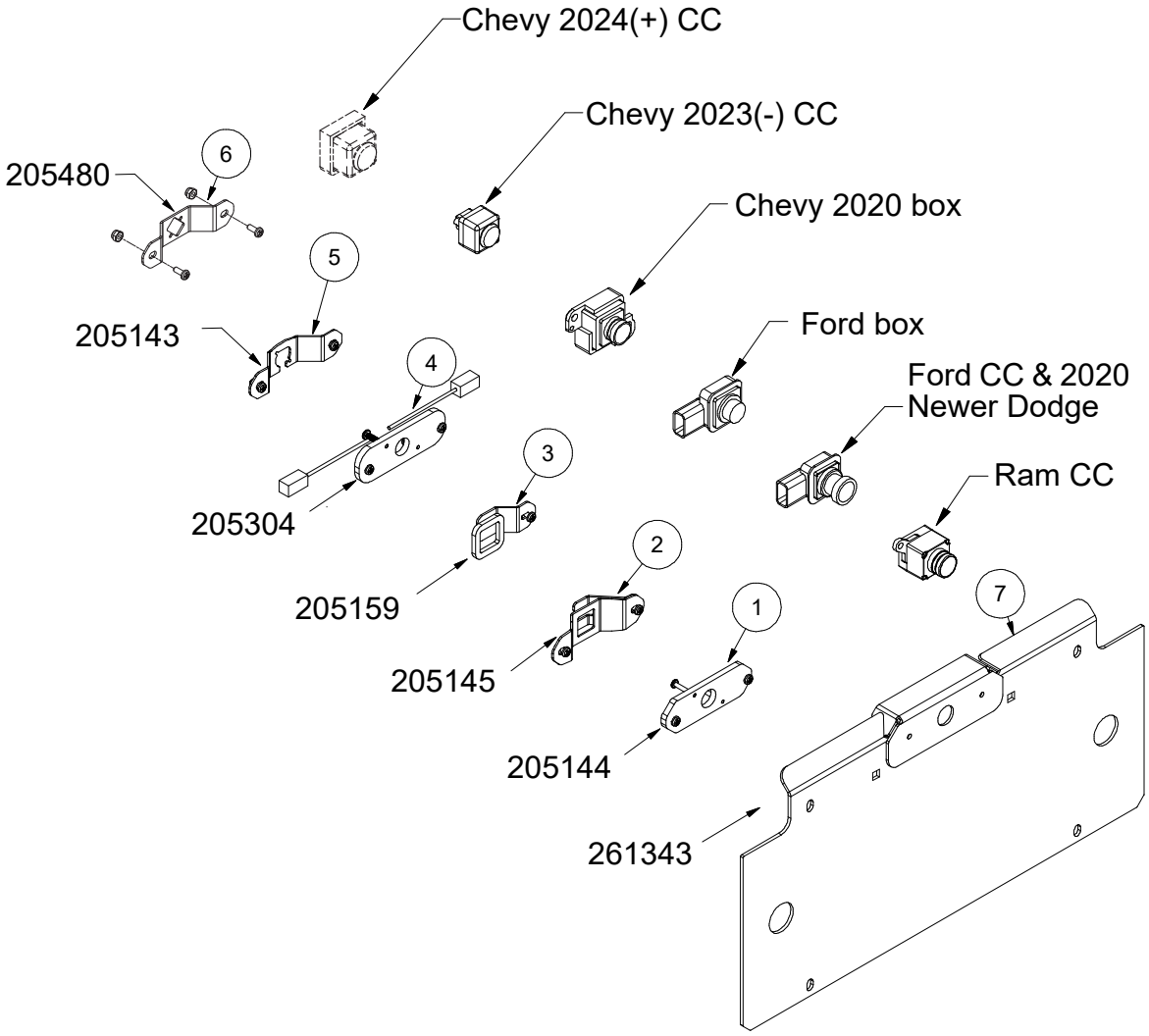

Item	Qty	Part #	DESCRIPTION
1	1	205144	DODGE/RAM camera mount kit
2	1	205145	FORD camera mount kit
3	1	205159	FORD BOX TAKE-OFF camera mount kit
4	1	205304	CHEVY/ GM 2020 BOX TAKE-OFF camera mount kit
5	1	205143	CHEVY/GM CC 2023- camera mount kit
6	1	205480	CHEVY/GM CC 2024+ camera mount kit
7	1	261343	CAMERA MOUNT WELDMENT

***Installer note:** DewEze does not engineer wiring nor harnesses for the camera. It is the installers' responsibility to trace the OEM cable to re-attach.

BED MOUNTING KITS

NOTE: Red highlighted kits have not been engineered. Examples of these trucks have not been made available to the factory engineers.

MAKE	PART #	YEAR	DESCRIPTION
FORD	205435	2017+	Ford BTO 871, 876, 976
	205441	1996-2016	Ford BTO 871
	205432	1999-2016	Ford BTO 876, 976
	205430	2017+	**Add-on** for **205459** or **205461** outboard DEF tank
	205459	2017+	Ford Cab-Chassis 879, 984
	205460	1999-2016	Ford Cab-Chassis 879, 984
	205461	2017+	Ford Cab-Chassis 988
	205462	1999-2016	Ford Cab-Chassis 988
CHEVY GMC	205453	2020+	Chevy BTO 871
	205451	2011-2019	Chevy BTO 871
	205468	2000-2010	Chevy BTO 871
	205452	2020+	Chevy BTO 876, 976
	205440	2011-2019	Chevy BTO 876, 976
	205442	2000-2010	Chevy BTO 876, 976
	205458	2011+	Chevy Cab-Chassis 984
	205465	2000-2010	Chevy Cab-Chassis 984
	205463	2011+	Chevy Cab-Chassis 988
	205466	2019+	Chevy Cab-Chassis 984 (4500-5500) XRT 60
	205467	2019+	Chevy Cab-Chassis 988 (4500-5500)
DODGE RAM	205434	2019+	Dodge BTO 870
	205437	2014-2018	Dodge BTO 870
	205469	2003-2013	Dodge BTO 870
	205439	2003-2013	Dodge BTO 876, 976
	205433	2019+	Dodge (3500) BTO 876, 976
	205436	2014+	Dodge (2500) BTO 876, 976
	205438	2014-2018	Dodge (3500) BTO 876, 976
	205455	2007+	Dodge Cab-Chassis 879, 984
	205457	2007+	Dodge Cab-Chassis 988
Misc.	205029		Yellow Bag & Contents *(applicable to older truck models not listed above)*

BED STRINGER MEASUREMENTS

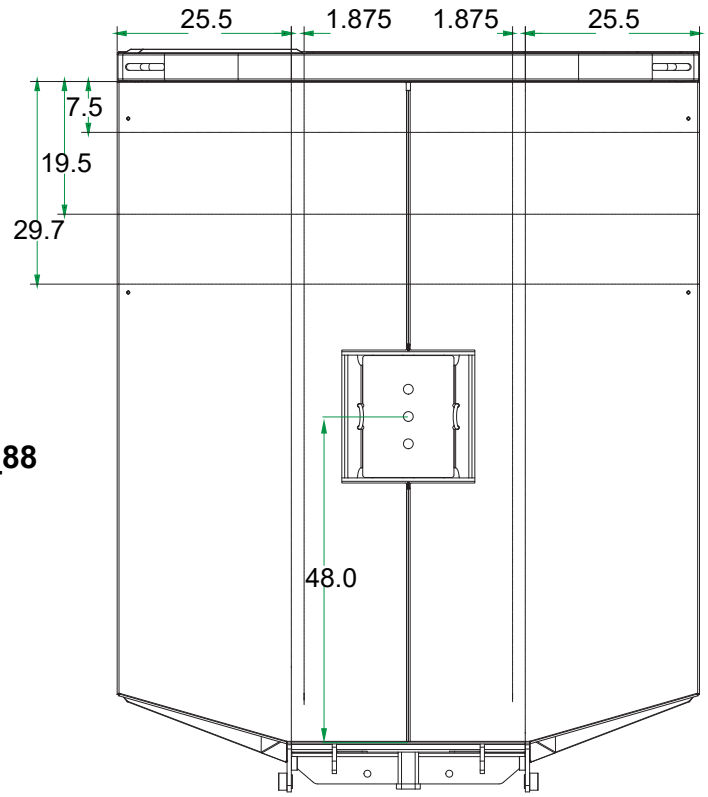

STRINGERS FOR: _79, _84, _88

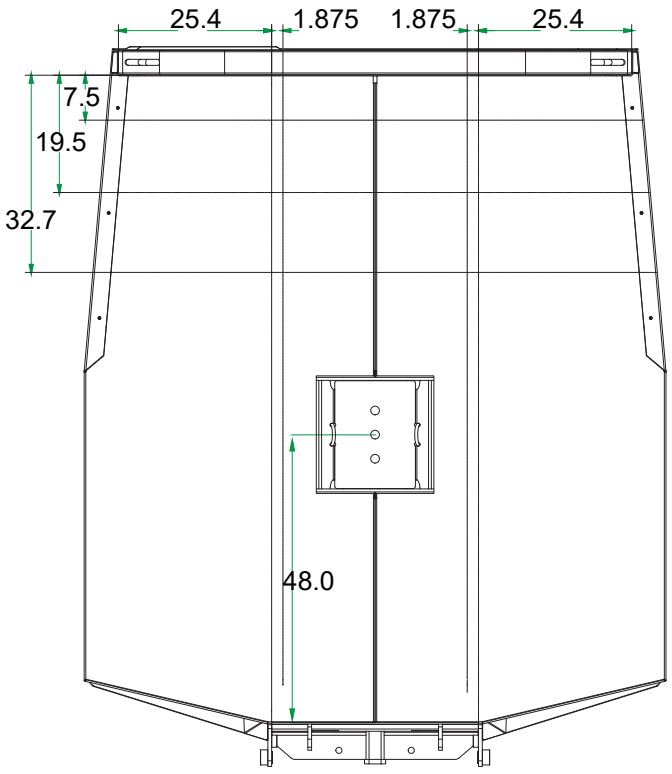

STRINGERS FOR: _76

232238 REV: A

CHEVY/GMC BD 2024+
Same as Butler GM BD 2024+

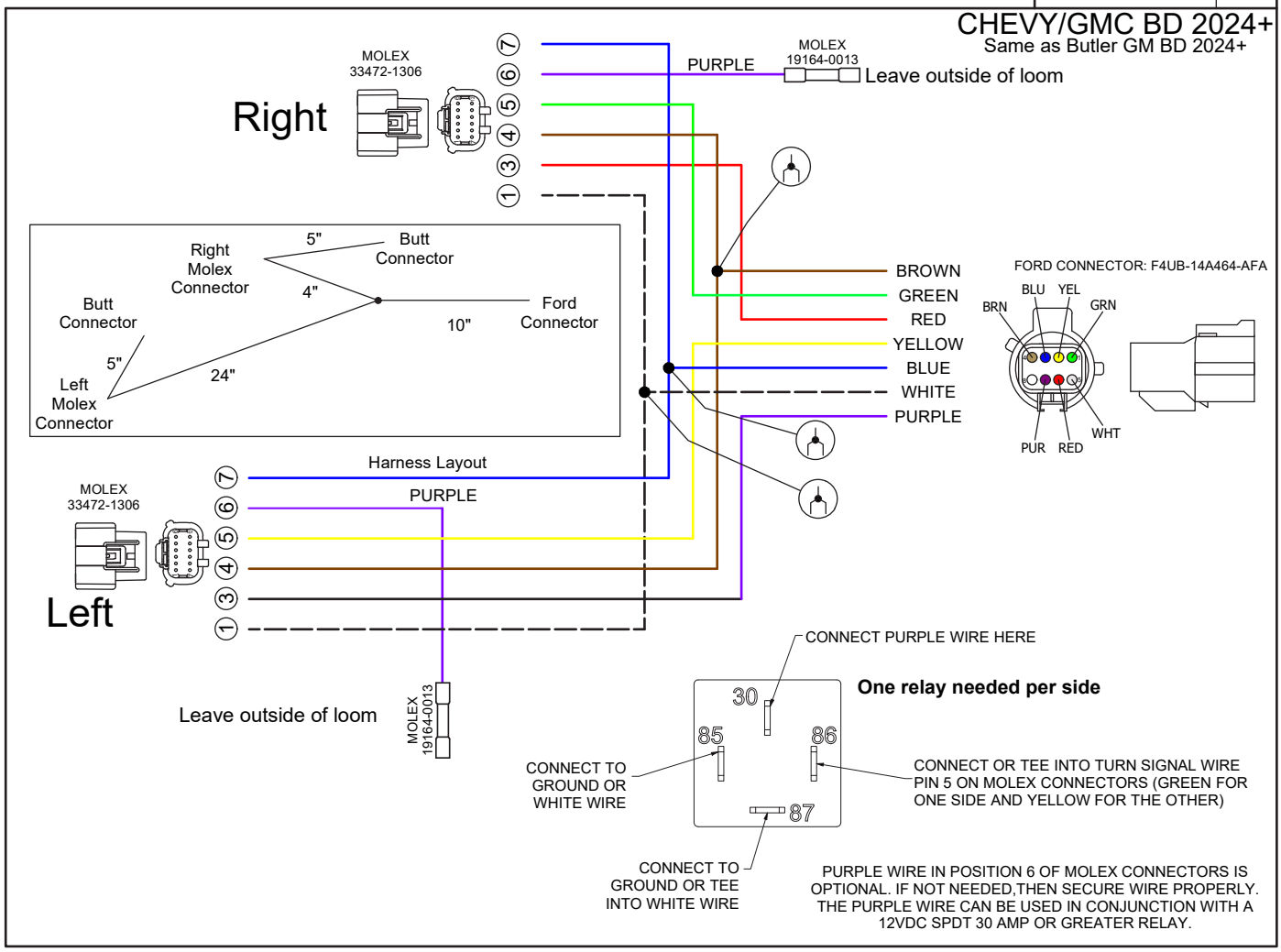

NOTES

Harper Industries, Inc.
151 E. Highway 160
Harper, KS 67058

Telephone: 620-896-7381
Toll-Free: 800-835-1042
Fax: 620-896-7129

Website: www.harperindustries.com

E-mail: info@harperindustries.com