BEEFCAKE

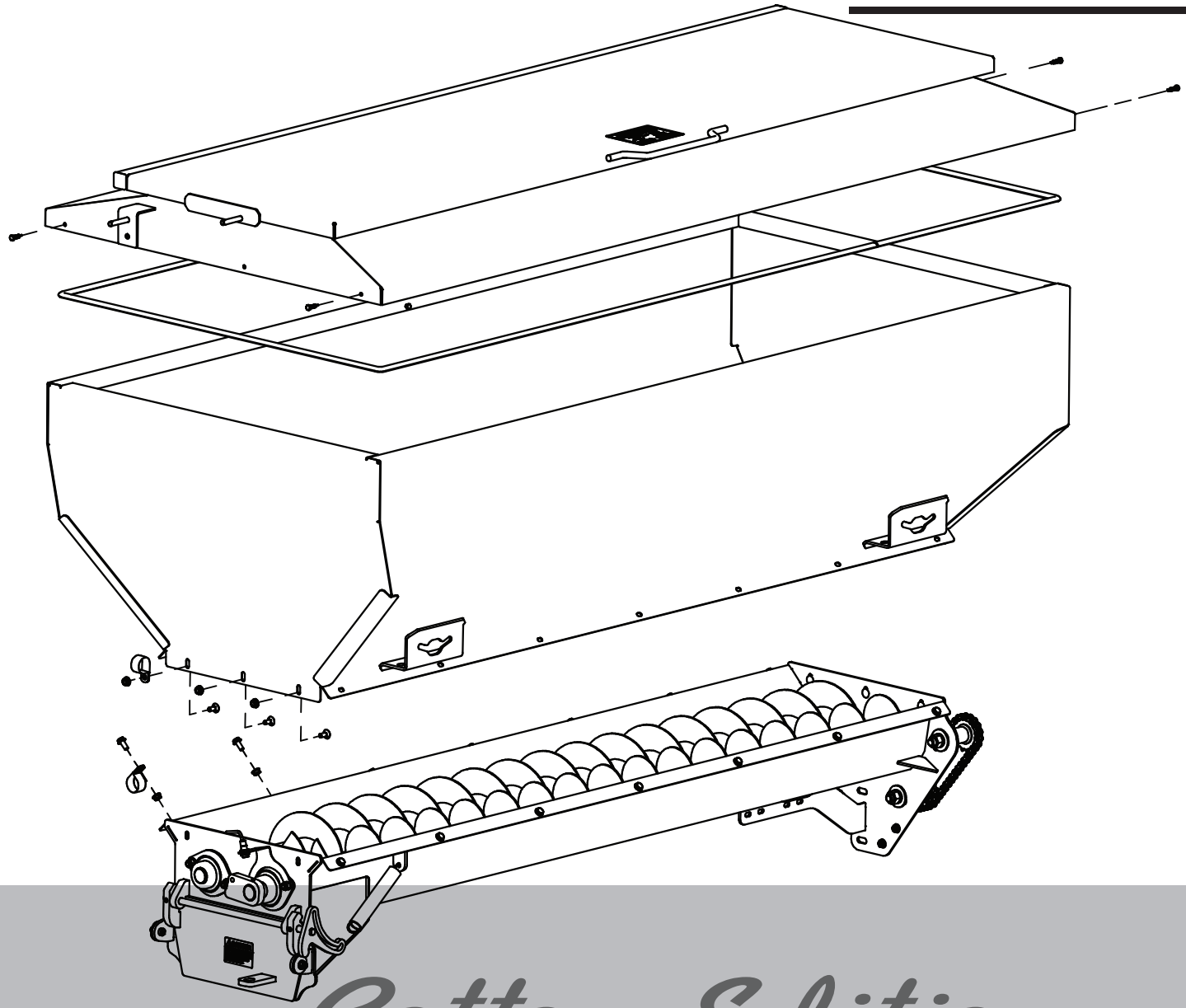

Cotton Edition

OPERATOR'S & PARTS MANUAL

10-2026

HARPER INDUSTRIES INC

Thank you for purchasing a Harper Beefcake.

TO THE OWNER OR OPERATOR:

As with all Harper products, the Harper Beefcake has been developed through tough design and testing procedures to produce a machine that can be relied on. This manual gives assembly, operating, and service information for models **BC1000, BC1500, and BC2000**. Please read and understand all instructional material included with the Beefcake and its components before assembling and operating the equipment.

A Beefcake cake feeder can present hazards to an operator who follows unsafe procedures in either the operation or maintenance of the unit. Therefore, **SAFETY WARNINGS** are presented at certain locations in the text.

SYMBOL: ⚠ **SAFETY WARNING!** ⚠

MEANING: Failure to understand and obey this warning may result in injury to you or others. Whenever this symbol is used, please pay very close attention to the information presented, and make sure you fully understand. If you do not, contact your dealer or Harper Industries for clarification.

⚠ **SAFETY WARNING!** ⚠

All shields and guards must be in place for proper and safe operation of this equipment. Where they are shown removed in this manual, it is for purposes of illustration and instruction only. Do not operate this equipment unless all shields and guards are in place.

Harper Industries, Inc. is continually striving to improve the design and performance of its products. We reserve the right to make changes in specifications and design without thereby incurring any obligation relative to previously manufactured products.

© 2026 Harper Industries, Inc.
The Harper and Beefcake names are registered trademarks of Harper Industries, Inc. All other brand and product names are trademarks or registered trademarks of their respective companies.

LIMITED WARRANTY

Harper Industries, Inc. (HII) warrants to each purchaser of a new Harper Beefcake from an authorized dealer or representative, that such equipment is free of manufacturer's defects in workmanship and materials which appear while in normal service for a period of ONE YEAR commencing with delivery to the original user.

The obligation of HII under this warranty is expressly limited, at our option, to replacement or repair at a service facility designated by Harper Industries or at the manufacturing plant in Harper, KS. A part will be replaced after inspection discloses it to have been defective. This warranty does not apply to defects caused by damage or unreasonable use (including failure to provide reasonable and necessary maintenance, or by performing functions without genuine Harper Beefcake accessories) while in the possession of the consumer.

Warranty is limited to parts, labor and ground freight delivery of replacement parts. HII shall not be liable for the consequential damages of any kind, including but not limited to consequential labor costs or transportation charges in connection with replacement or repair of defective parts.

This warranty does not apply to parts subjected to misuse, abuse, alteration, improper or inadequate maintenance, or normal wear (including chains, augers).

Harper Industries makes no warranty with respect to trade accessories. They are subject to the warranties of their respective manufacturers.

ANY IMPLIED OR STATUTORY WARRANTIES, INCLUDING ANY WARRANTY OR MERCHANTABILITY OR FITNESS FOR A PARTICULAR PURPOSE, ARE EXPRESSLY LIMITED TO THE DURATION OF THIS WRITTEN WARRANTY. HII makes no other express warranty, nor is anyone authorized to make any on behalf of HII.

For further information please contact your nearest Harper Beefcake dealer.

Date of Purchase _____/_____/_____

Dealer's Name _____

Dealer's Phone _____

Serial Number _____

Table of Contents

OPERATOR SECTION

To the Owner or Operator 1
Warranty Statement 2
Table of Contents 3
Specifications 4
Feature Identification 4-5

General Safety Guidelines
- Equipment and Controls 6
- Guards and Shields 6
- Replacement Parts 6
- Safety Decals 6
- Hydraulics 6

Installation 7

Operating Instructions
- Before Operating 8
- Transporting 8
- Operating
  - Hydraulic BC 8
  - Electric BC 9
  - Counter Issues 9

Optional Door Operations
- Door Lifting Mechanism 10
- Kicker 10

Optional Chute Operations
- Method 1 - Manual Chute Operations 11
- Method 2 - Actuator 11

Electric Models 12

PARTS SECTION

Structure
- Cake Feeder Assy. 15
- Cake Feeder Stand 16
- Auger & Trough Assy. 17
- Auger Orientation 18
- Drive Chains Adjustment & Tension 18
- Lid & Frame Assy. 19
- Lift Handle & Latch/Drive Shield 20
- Agitator Drive Assy. 21
- Agitator Assy. 22
- Chute Extension Assy. 23
- Cake Feeder Dummy Arms 24
- Drive Shield 25
- Decals 26

Hydraulic/Electric
- Hydraulic Drive 27
- Electric Drive (2021) 28
- Electric Drive (2017) 29
- Hand Control 30
- Electrical Harnesses 31
- Electrical Schematic 32

Optional
- Electric Actuator 33
- Door Operation Options (Kicker) 34
- Light Bar Option (800/900 Beds) 35
- Light Bar (Non-800/900 Beds) 36

Specifications

Power	Hydraulic Electric Motor - Leeson 3/4 hp
Capacity	BC2000 - 46 cu. ft. - about 2000 lbs. w/ 3/4” range cubes or 900 lbs. of cotton seed
Dimensions	BC2000 - Length: 80 in Width: 42 in Height: 50.3 in
Paint	Durable 2-part Polyurethane
Augers	Two 6 inch diameter augers Left - 76 3/4 in long Right - 78 in long
Options	- Electronic Actuator for chute - Kicker for chute door

NOTE: *Following publication of this manual, certain changes in standard equipment and options may have occurred which would not be included in these pages. Your Harper dealer is the best source for up-to-date information.*

Feature Identification

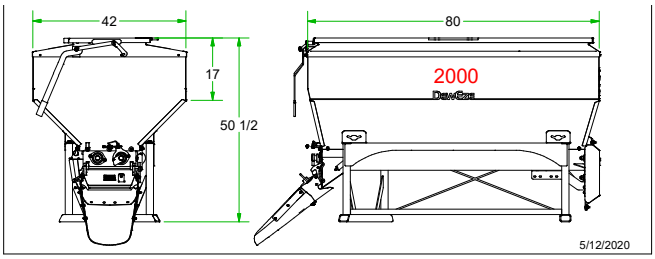

Agitator - when rotating, it keeps seed from bridging, and breaks up bunches before it is fed into the augers.

Agitator Pin - when inserted, the agitator is engaged. This should only be engaged when feeding cotton seeds.

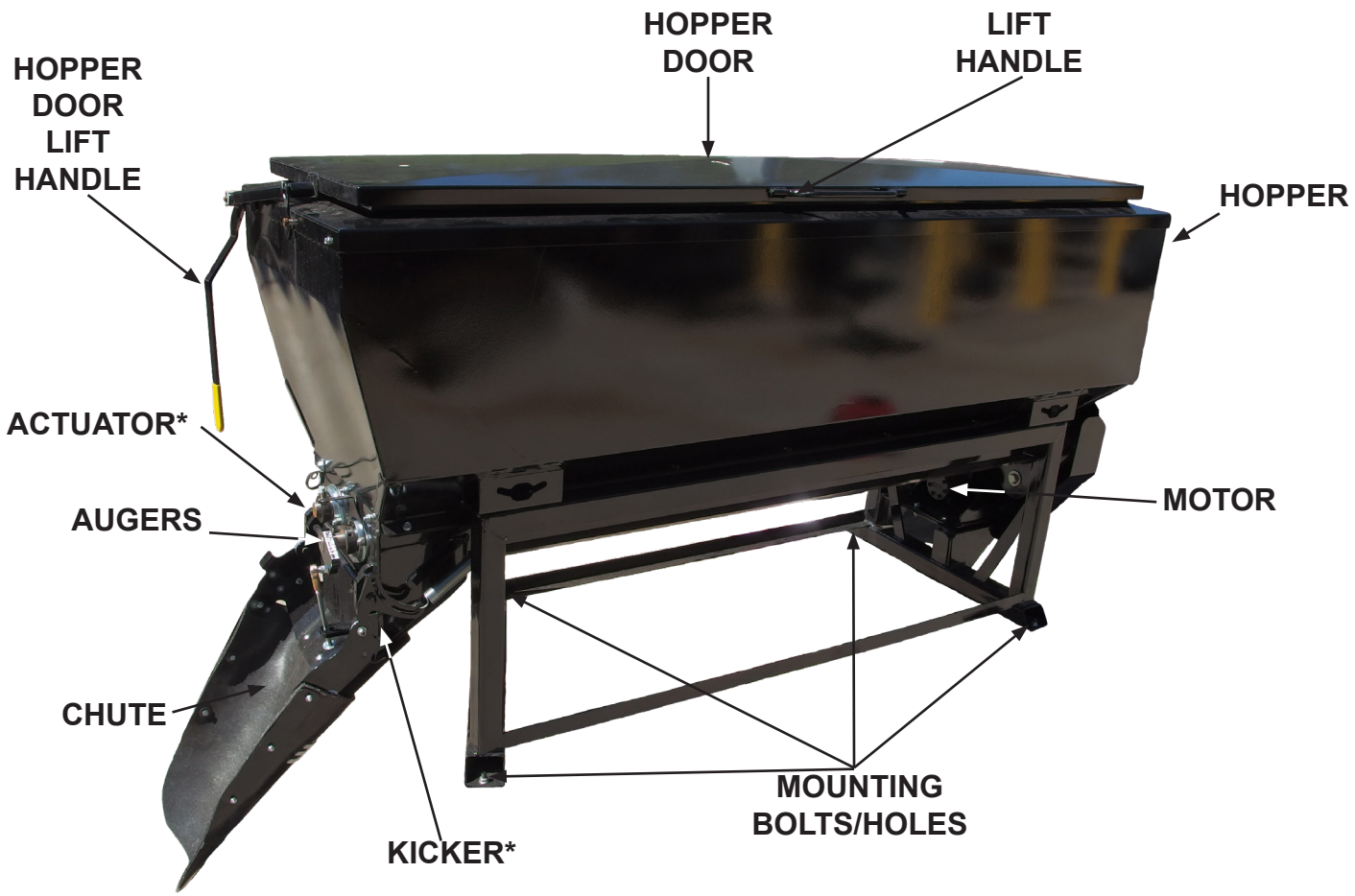

Hopper Door Lift Handle - used to open the hopper from the ground.

Actuator* - raises and lowers the chute.

Augers - when rotating, push the feed out of the hopper and down chute.

Chute - made of rubber and can be raised for transport or lowered for distribution of feed.

Kicker* - when attached it allows the door for the feed to be held in an open position.

Mounting Holes/Bolts - for mounting the **Beefcake** to the flatbed.

Motor - is a Leeson 3/4 hp used to power the dual augers.

Hopper - has three options of capacity: 1000, 1500, or 2000 lb limits based on choice of **BC**.

Hopper Door - has a weather proof strip on the inside edge of door to keep moisture out.

Lift Handle - used to open hopper when on the bale bed.

* denotes optional attachments of the **Beef-cake**.

General Safety Guidelines

Equipment & Controls

- Before operating this equipment, read and understand the Operator's Manual.
- Altering the unit in any way that adversely affects its safe operation, performance or durability will void the warranty and may cause hazardous conditions.
- Know the location and function of all controls and how to stop the equipment quickly in an emergency before you operate the unit.
- Keep all bolts, screws and fittings tight to ensure safe operation of equipment.

Guards & Shields

- Keep all safety devices in place and in good operating condition.
- Replace all worn, damaged, unusable, missing or lost safety shields and guards before operating unit.

Replacement Parts

- Use genuine factory parts or parts with equivalent characteristics including: type, strength and material.
- Replace locknuts and locking screws if they cannot be tightened without considerable resistance for several turns before they are completely tight.
- If hardware is not secure, or if fasteners are over-tightened, equipment failure may result posing possible safety hazards.
- Use proper torque specifications for all fasteners when they are replaced.

SAFETY WARNING!

Failure to use genuine factory parts may result in voiding of the warranty, product malfunction or possible injury.

Safety Decals

- If safety related or instructional decals become illegible or are removed, replace them immediately.
- If parts are replaced, make sure all safety related or instructional decals are present before the equipment is operated again.
- New decals may be obtained from your local Harper Dealer.

Hydraulics

To prevent serious injury or death:

- Relieve pressure on system before repairing, adjusting or disconnecting any hydraulic hose or fitting.
- Wear proper hand and eye protection when searching for leaks.
- Use wood or cardboard instead of hands when looking for leaks.
- Keep all hoses, fittings and components in good operating condition.
- Do not use any type of heat or flame (welding, soldering, cutting torch, etc.) near pressurized hydraulic lines.

SAFETY WARNING!

HIGH-PRESSURE FLUID HAZARD!

Escaping fluid under pressure can penetrate skin causing serious injury or death.

Installation

You can use select Deweze Balebeds to lift your new **Beefcake** on to the bed or one of many other options as long as safety, precaution and common sense are used.

SAFETY WARNING!

Keep any objects or body extremities from beneath the Beefcake when loading and do not stand under the feeder when it is raised.

Next, position the Beefcake into place so that you can mark on the flatbed floor the location of the mounting holes for attaching the **Beefcake.** Align the mounting holes with stringers of the flatbed, and mark the (4) mounting holes for drilling, rotate the Beefcake to the back of your flatbed, and drill the (4) mounting holes.

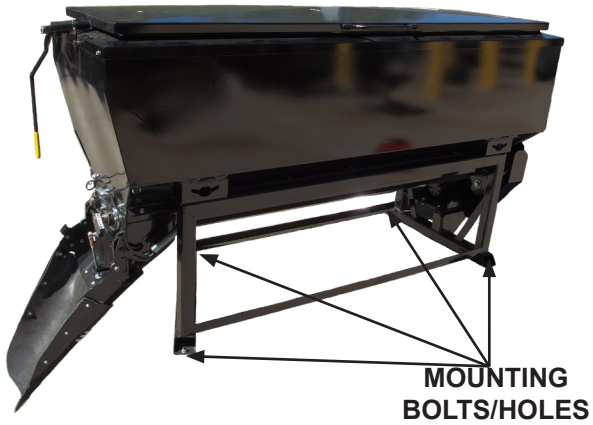

Put the Beefcake back in place where you marked and drilled the mounting holes. Attach with either the (4) mounting bolts included in your purchase or your own preferred size of mounting bolt that can fit into the predrilled mounting points on the Beefcake.

The final step depends on whether you have purchased the hydraulic or electric motor version of the Beefcake.

For the hydraulic, connect the hydraulic hoses that are attached to the Beefcake to your bed's hydraulic hookups located on the right side of the headache rack. There is a check valve pre-installed on your Beefcake. If by chance the augers do not run when activated, switch the hoses on the bed location. This will allow it to run correctly. There is also an electrical harness that will need positive and negative leads run from the feeder to the battery under the hood of the truck.

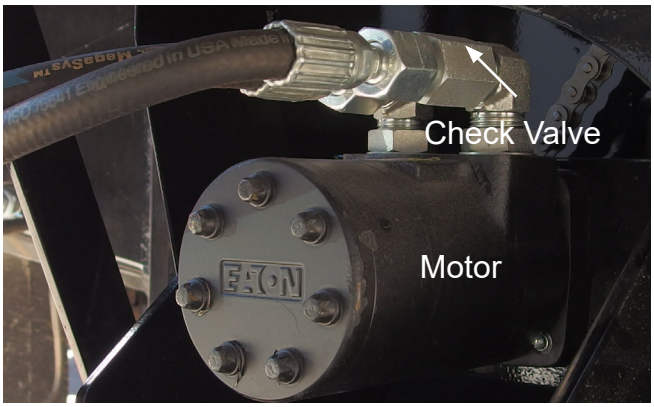

For the electric, attach the positive cable to the solenoid as depicted below, and run it to the positive end of the battery on the truck, and be sure to put the 200 Amp fuse on with the cable (this will protect the motor).

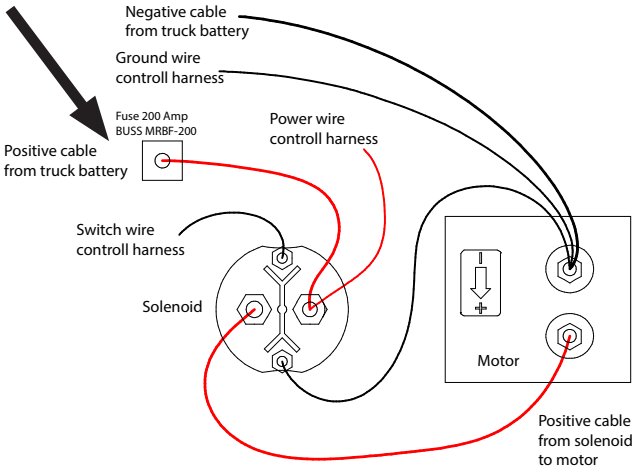

Also, If you prefer to operate either of the version (hydraulic or electric) from inside your truck, run the Beefcake controller to the inside of your truck.

DewEze Flatbed Stringer Locations

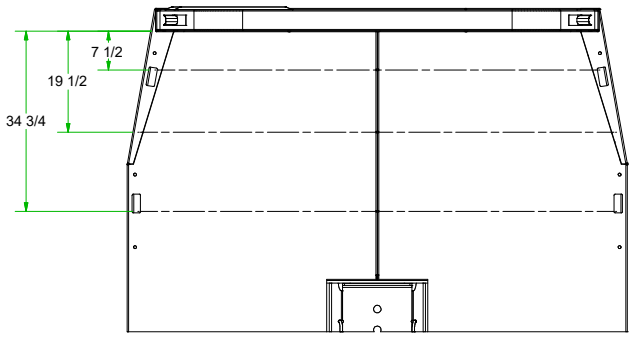

684 & 784

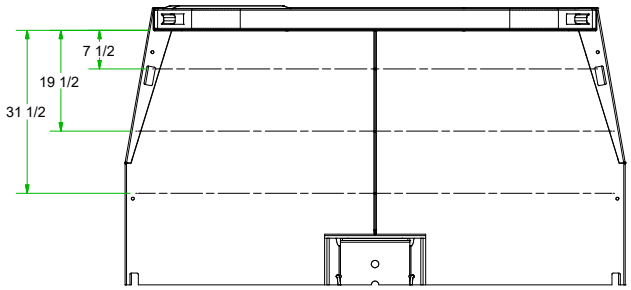

676 & 776
688 & 788

Operating Instructions

Before Operating

- Inspect inside the hopper and around the chain drive for the augers for any foreign objects. If any are found remove it/them.
- Be sure to check that all shields are in place and that all bolts or fasteners are tightened.

Transporting

- When transporting the Beefcake, be sure that the hopper lid's lift handle has the safety latch in place so that the lid does not rise during transport due to wind.

Operating

When feeding cotton seed, insert agitator pin, and for any other feed remove pin.
See page 4 for location.

Hydraulic Powered Beefcake

- Fill Beefcake with desired amount of feed or grain product.
- Lower the rubber chute to feeding position.
- Activate the hydraulic motor with the balebed's remote.

Due to the check valve on this product, if it becomes clogged or stalls, it cannot be reversed to dislodge it. You must stop the feeder, shut of the units power, and disconnect the hydraulic hoses to relieve any pressure on the system before seeing to the problem.

SAFETY WARNING!

Do not put hands into a plugged auger when there is pressure on the system. It can result in harm.

- Do not use the hopper for long term storage of feed. It could create a corrosive environment and cause unwarranted wear on your machine.

Electric Powered Beefcake

- Fill Beefcake with desired amount of feed or grain product.
- Lower the rubber chute to feeding position.
- Activate the electric motor with the Beefcake's remote.

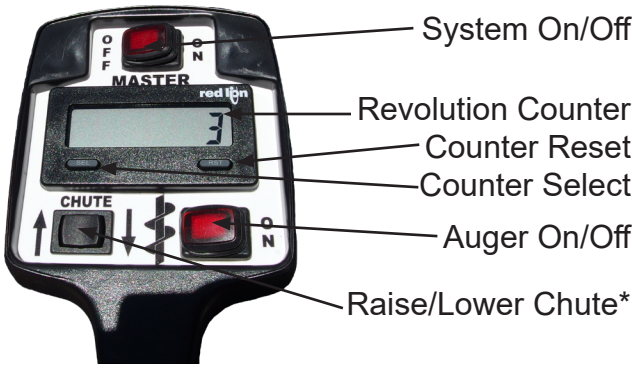

*Only available with the chute actuator option otherwise this switch serves no purpose.

For Your Information

The controller for the Beefcake is used in both the hydraulic and electric version of the feeder. Currently, the only difference is that the auger is activated differently between the two options. The electric uses the auger on/off switch on the Beefcake remote, and the hydraulic uses the flatbeds hydraulic function to activate the auger. Aside from the auger, everything else on the Beefcake remote is universal.

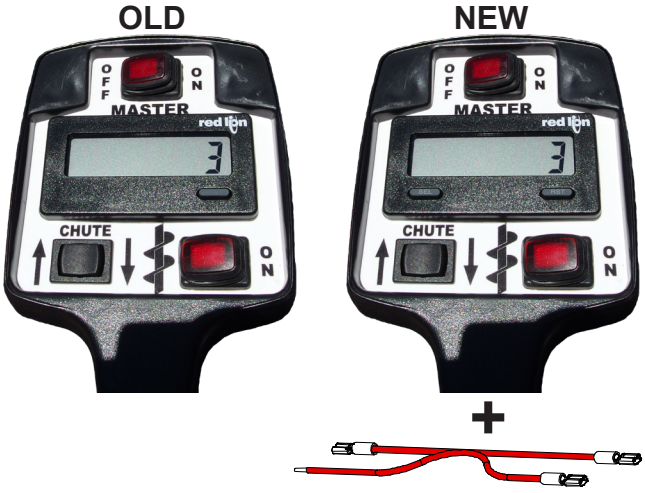

NOTE: Old ONE BUTTON counters had a soldered battery and are obsolete. New counters have TWO BUTTONS and require a jumper wire to add constant power: **Page 30**

Red Lion Cub5B Counter Factory Reset

RESET:

Press RST and hold for 3 seconds & release.

Press SEL 1 time.

REPROGRAM:

Power off hand control then turn back on.

Hold SEL for 3 seconds.

>>>>> Screen will display "Pro No"

Press RST 3 times.

>>>>> Screen will display "3-dsplay"

Press SEL 8 times.

>>>>> Screen will display "Fact Set", "No"

Press RST 1 time.

>>>>> Screen will display "Yes"

Press SEL 1 time.

>>>>> Screen will display "Pro No"

Press SEL 1 time.

Done

NOTE: Error code EE means an error occured between the counter and the sensor. Ensure all wires are tightend and free of corrosion. Also look for nicks that could cause intermittent ground faults.

NEW COUNTER NOT COUNTING?

99% of the time dip switches aren't set right

(Left to Right) 1 = DOWN 2,3,4 = UP

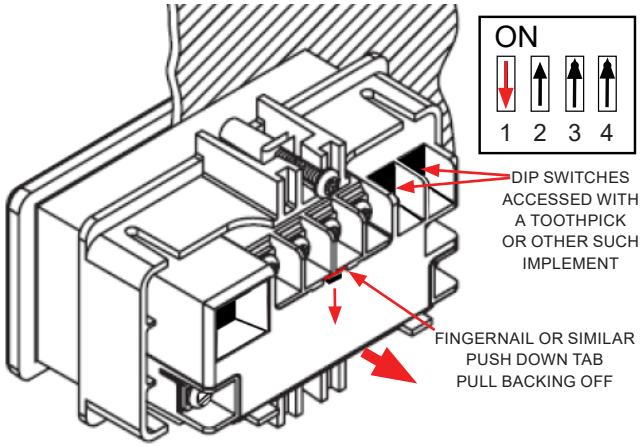

Optional Door Operations

Method #1
Door Lifting Mechanism and Operation

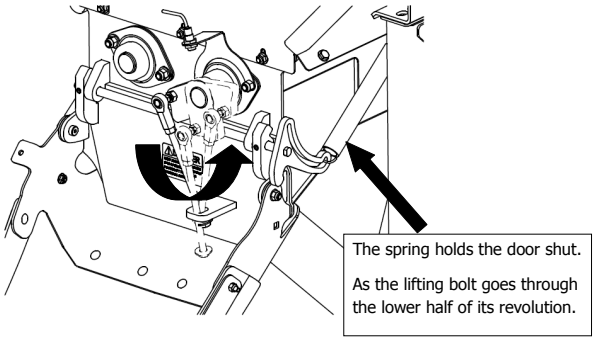

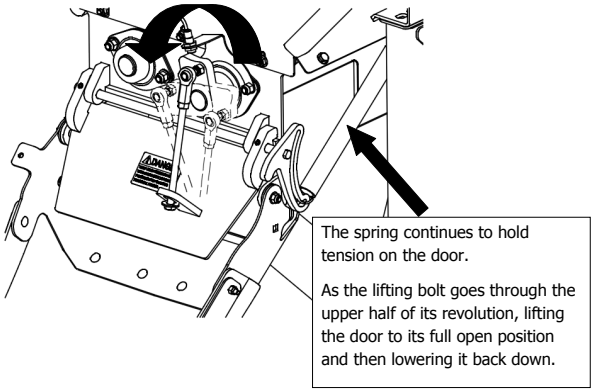

When it is in the closed position, it will create piles while operating. Where as if it is in the open position, it will create a row while operating.

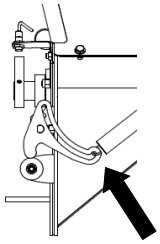

Changing the position of this spring holds the door **OPEN** or **CLOSED**

This is located on the right side of the chute as depicted by the image.

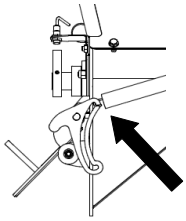

Reference **Page 34** for optional door lift parts

Method #2
Kicker

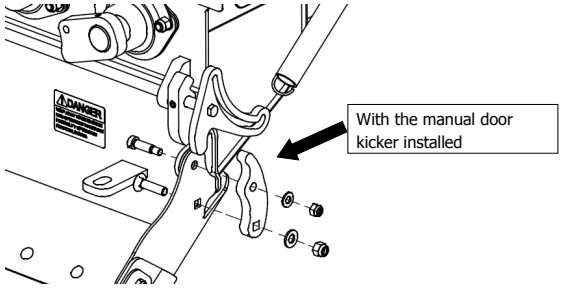

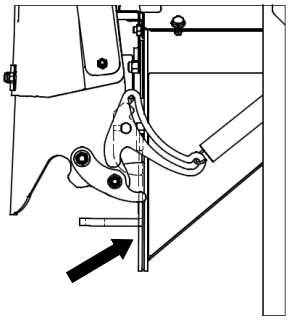

When the Chute is up the door is closed.

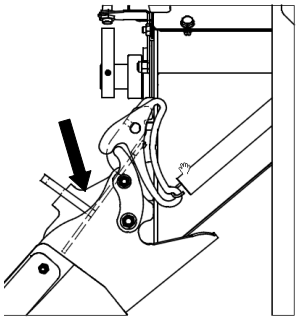

When the Chute is down the door is open.

The kicker is a great option for when you will always be making rows rather than piles with your feed.

NOTE: USE ONLY ONE METHOD.

CAUTION!

Using both optional methods at the same time will cause either the chain or actuator to fail.

Optional Chute Operations

Method #1
Standard

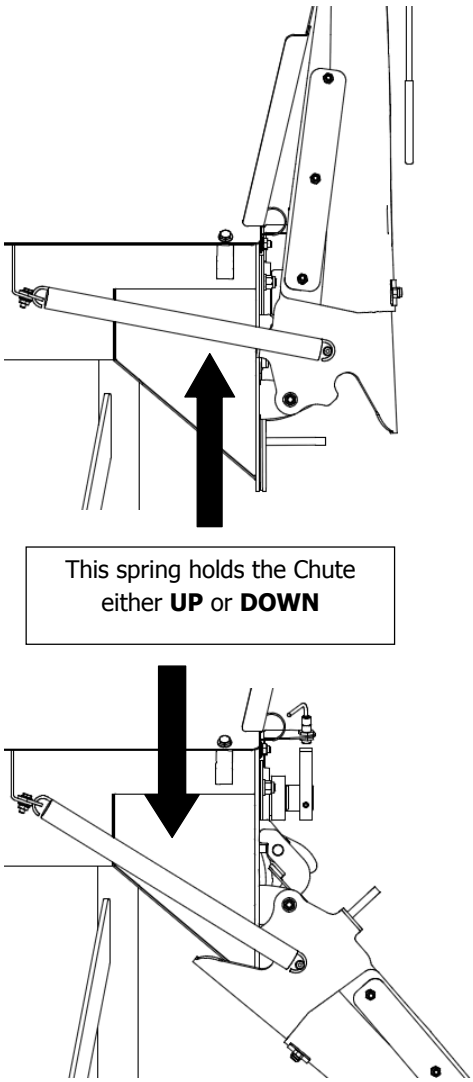

This is located on the left side of the chute as depicted by the image.

This is used for transportation so that the chute is not damaged in any way due to protruding from the side of the truck.

Method #2
Actuator

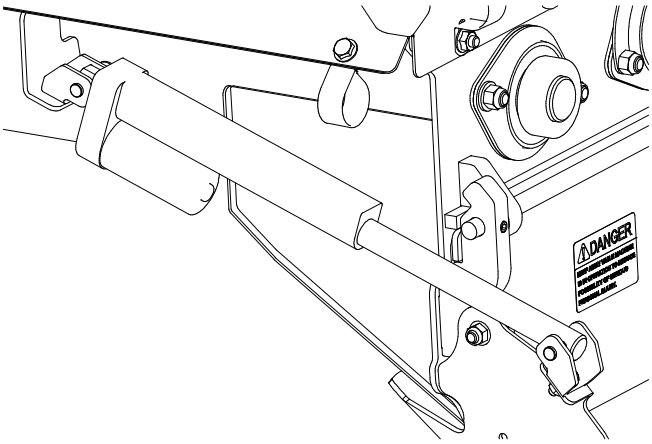

The actuator replaces the spring that holds the chute either an up or down position. It allows the operator to manage the chute from the comfort of the seat or whatever their location is. See page 7 for details on the switch for the actuator.

DewEze Electric Beefcake

Electrical Minimum Requirements

Cable Requirements

All Electric Beefcake models are supplied with 18FT 2GA welding cable leads for hook-up to truck battery — This is maximum length for this cable

If a longer length is desired refer to chart below for minimum cable size

18FT	25FT	30FT	35FT	40FT
Supplied	"0" Gauge	"00" Gauge	"00" Gauge	"000" Gauge

Cables of new length must be built from single cables without splices or connections — Cable ends must be properly crimped or soldered

Electrical Supply Requirements

Beefcake electric feeders require a stable power source:

- **Batteries must be in good condition and should be fully charged (12.7V standing)**
- **Truck Charging System must operational (14V+ if engine running)**
- **All electrical connections must be good (checked with voltmeter, not visually)**

Batteries at 12.1 Volts are not fully charged they are actually 50% discharged

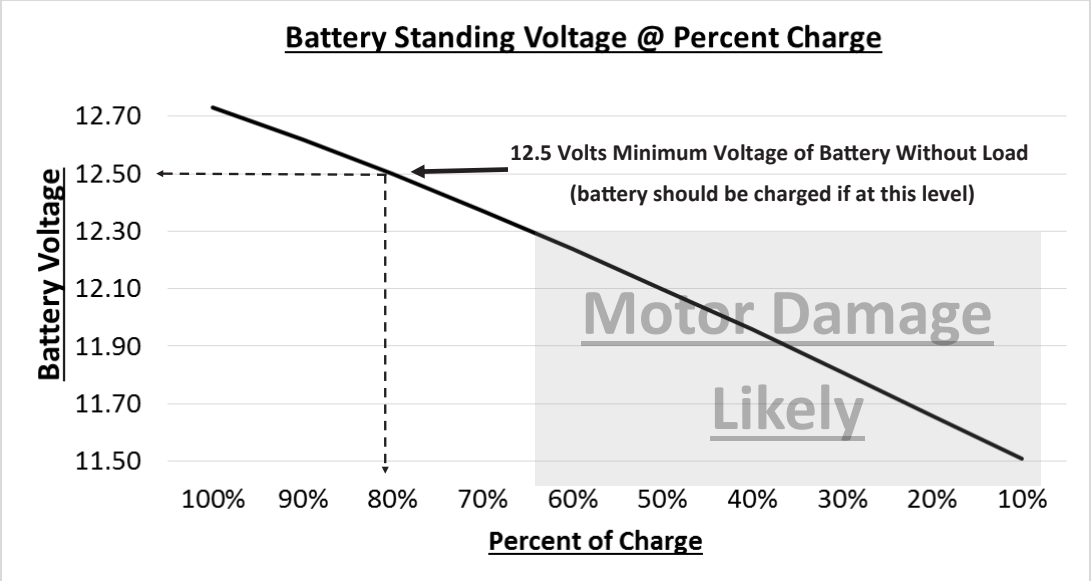

Chart Shows the unloaded voltage of a good battery at a particular charge level this is for reference only — actual battery charge and capacity should be determined by load testing of the battery

2/12/19

PARTS

Table of Contents

PARTS SECTION
Structure
Cake Feeder Assy..... 15
Cake Feeder Stand..... 16
Auger & Trough Assy..... 17
Auger Orientation..... 18
Drive Chains Adjustment & Tension..... 18
Lid & Frame Assy..... 19
Lift Handle & Latch/Drive Shield..... 20
Agitator Drive Assy..... 21
Agitator Assy..... 22
Chute Extension Assy..... 23
Cake Feeder Dummy Arms..... 24
Drive Shield..... 25
Decals..... 26

Hydraulic/Electric
Hydraulic Drive..... 27
Electric Drive (2021)..... 28
Electric Drive (2017)..... 29
Hand Control..... 30
Electrical Harnesses..... 31
Electrical Schematic..... 32

Optional
Electric Actuator..... 33
Door Operation Options (Kicker)..... 34
Light Bar Option (800/900 Beds)..... 35
Light Bar (Non-800/900 Beds)..... 36

CAKE FEEDER ASSEMBLY (COTTON EDITION)

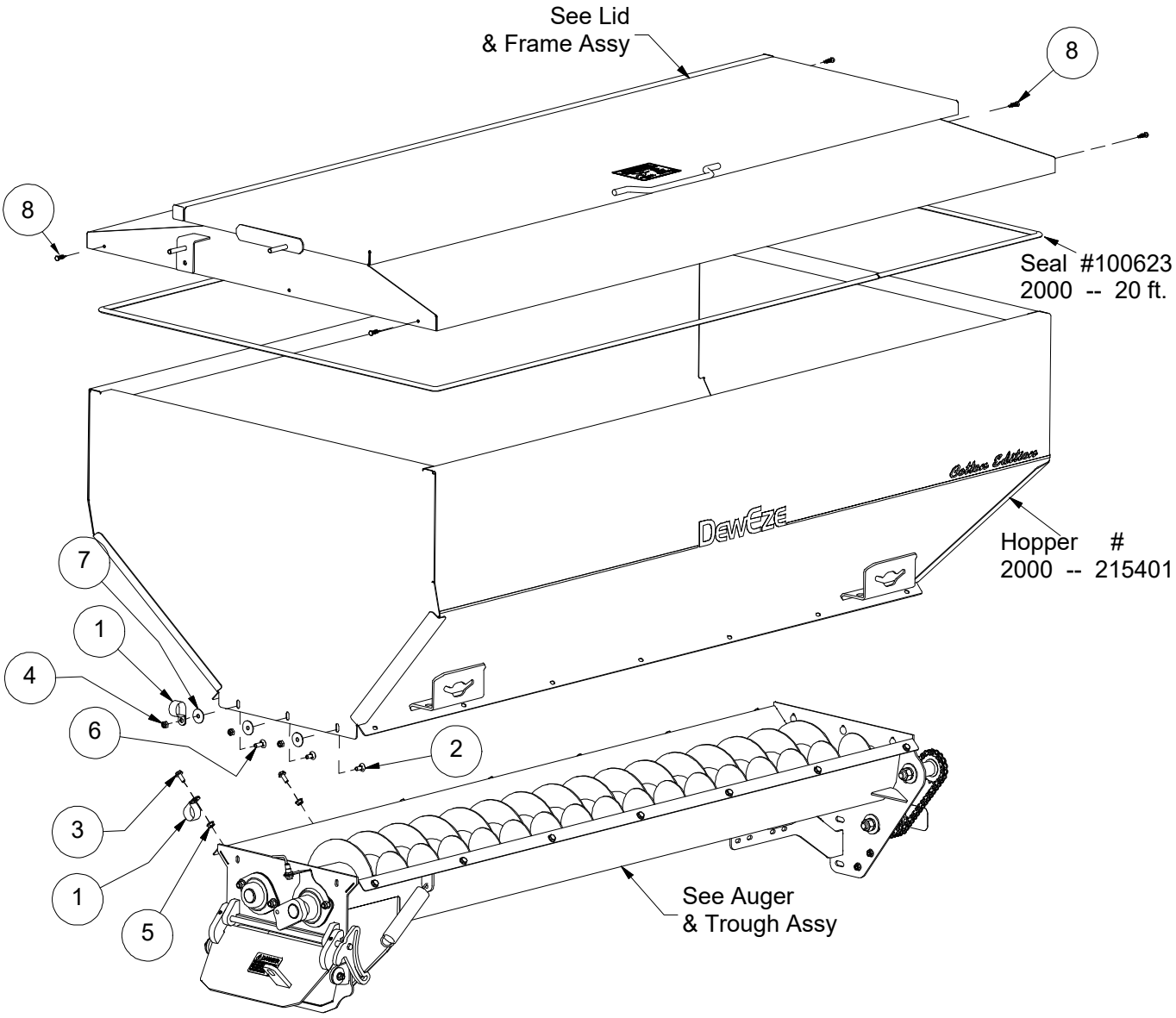

ITEM	QTY	PART #	DESCRIPTION
1	6	102074	Clamp, Adel .75w X 1.25id X .406 Hole
2	5	110020	Bolt, 5/16-18 X 0.75 In Carriage
3	14	110444	Bolt, 5/16-18 X 0.75, Wiz Flange
4	6	110603	Nut, 5/16-18 Lock (Nylon)
5	14	110606	Nut, 5/16-18 Wiz Flange
6	1	110871	Bolt, 5/16-18 X 1 In Carriage
7	6	111155	Washer, 5/16 Flat, Large Dia. 1-1/4 Zinc
8	7	710586	Screw, 1/4 X 1 Tek Self-Tap

CAKE FEEDER STAND

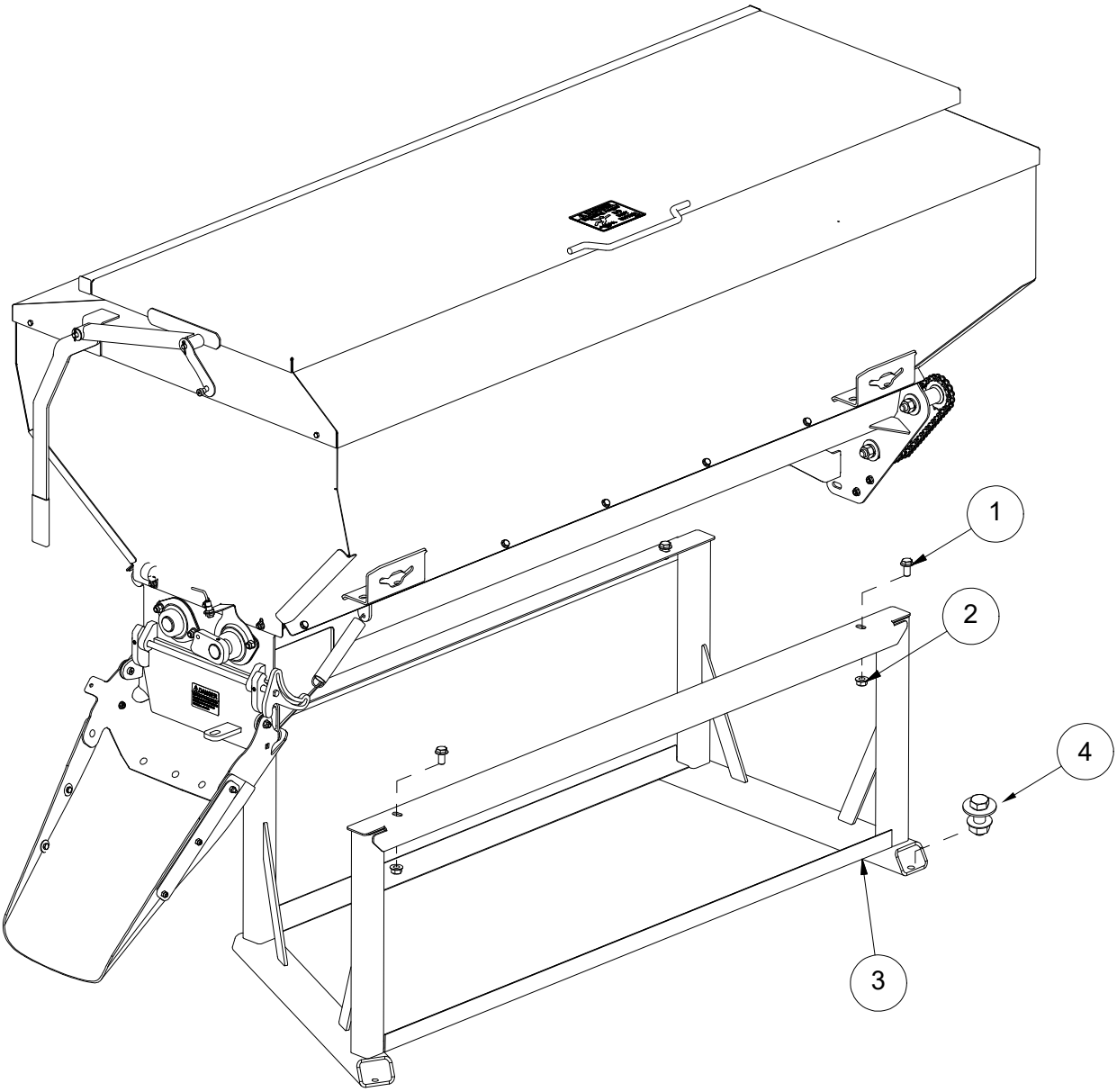

ITEM	QTY	PART #	DESCRIPTION
1	4	110220	Bolt, 1/2-13 X 1, Wiz Flange
2	4	110588	Nut, 1/2-13 Wiz Flange
3	1	215376	Weldment, Cake Feeder Stand, 2017
4	4	205136	Kit, Mounting Bolts

AUGER AND TROUGH ASSEMBLY

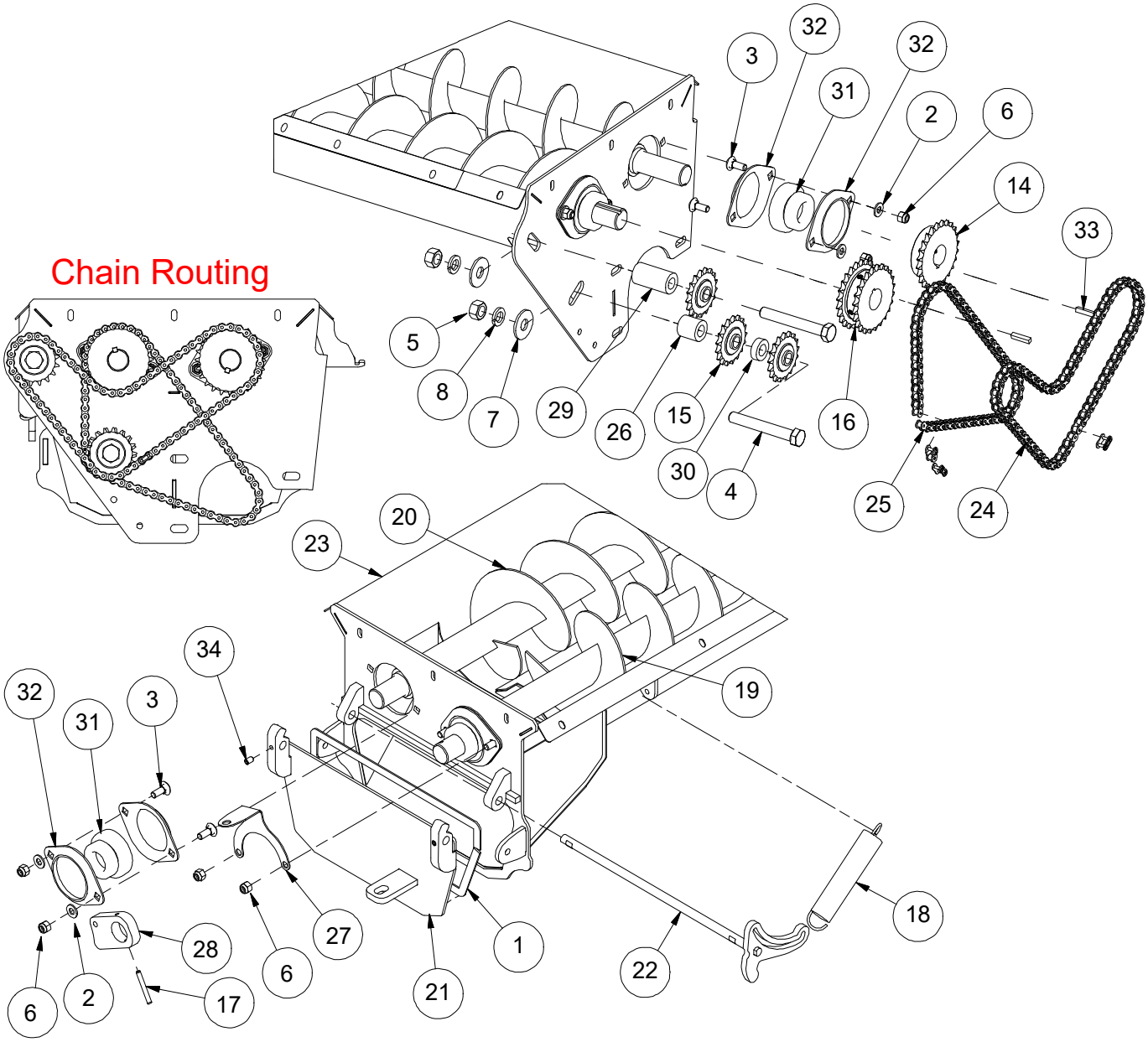

ITEM	QTY	PART #	DESCRIPTION	ITEM	QTY	PART #	DESCRIPTION
1	3ft	100613	Lid Seal, .50 X .187 X 36	22	1	215411	Hinge Rod, Twin Door
2	6	110155	Washer, 3/8" Flat Sae	23	1	215431	Cake Feeder Trough
3	8	110556	Bolt, 3/8-16 X 1 In Carriage	24	1	240008	Chain, Rear, #40 Roller, 38 Links
4	2	110562	Bolt, 5/8-11 X 4.5	24.1	1	140023	Connecting Link, #40 Chain
5	2	110597	Nut, 5/8-11 Hex	25	1	240011	Chain, Drive, #40 Roller, 32 Links
6	8	110618	Nut, 3/8-16 Lock Nylon Insert	25.1	1	140023	Connecting Link, #40 Chain
7	2	110650	Washer, 5/8" Flat Standard	25.2	1	140024	Offset Link, #40 Chain
8	2	110655	Washer, 5/8" Lock	26	1	260165	Spacer, 1.25 X .69 X 1.25
14	1	142011	Sprocket, 40bs24 X 1-1/4	27	1	260470	Sensor Mount, Feeder
15	3	142013	Sprocket, 4017 Idler, 5/8	28	1	260528	Feeder Door Arm
16	1	142016	Sprocket, Ds40a24 X 1-1/4	29	1	260678	Spacer, 1.25 X .69 X 2.38
17	1	200150	Roll Pin, 1/4 X 2	30	1	260679	Spacer, 1.25 X .69 X .4
18	1	202121	Spring, 1.28od X 7.0l X .135 Wire	31	4	410232	Bearing Insert, 2.83, 1.25" Ec Lk
19	1	215337	Auger, Left Hand, 6x4	32	8	410233	Flange, 2 Hole
20	1	215338	Auger, Right Hand, 6x4	33	2	510089	Key, 1/4 X 1/4 X 1.25, Under
21	1	215409	Chute Door	34	2	510254	Setscrew, 5/16-18 X 0.5

DRIVE CHAINS ADJUSTMENT & TENSION

Adjust This Chain .70"-.87"

Adjust This Chain Second .40"-.60"

Adjust This Chain First .30"-.50"

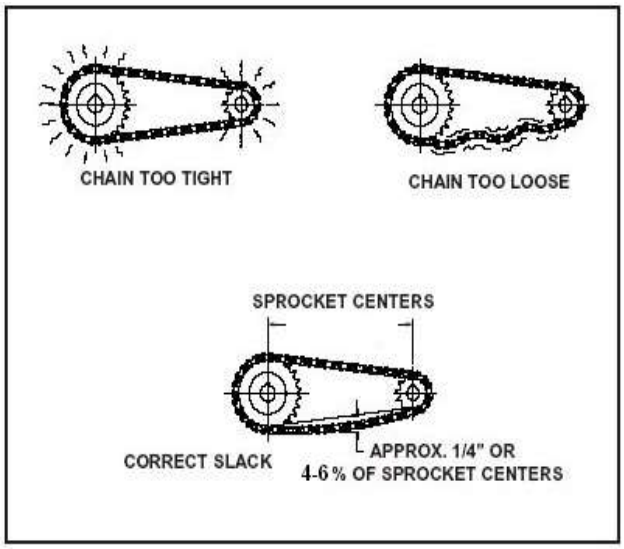

AUGER ORIENTATION

AUGER FLIGHTING ALIGNED

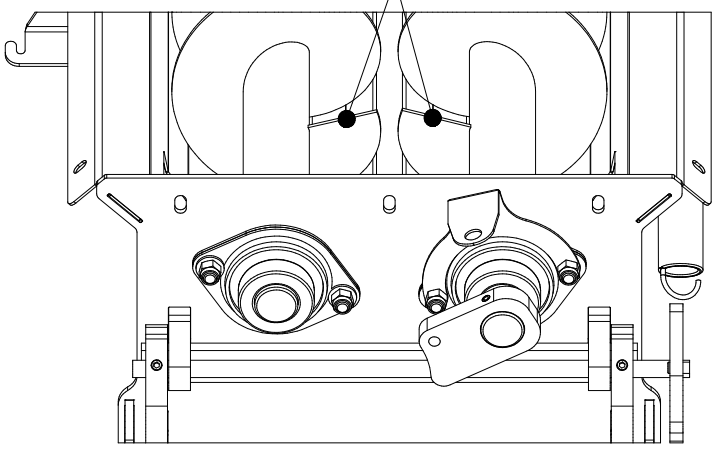

LID AND FRAME ASSEMBLY

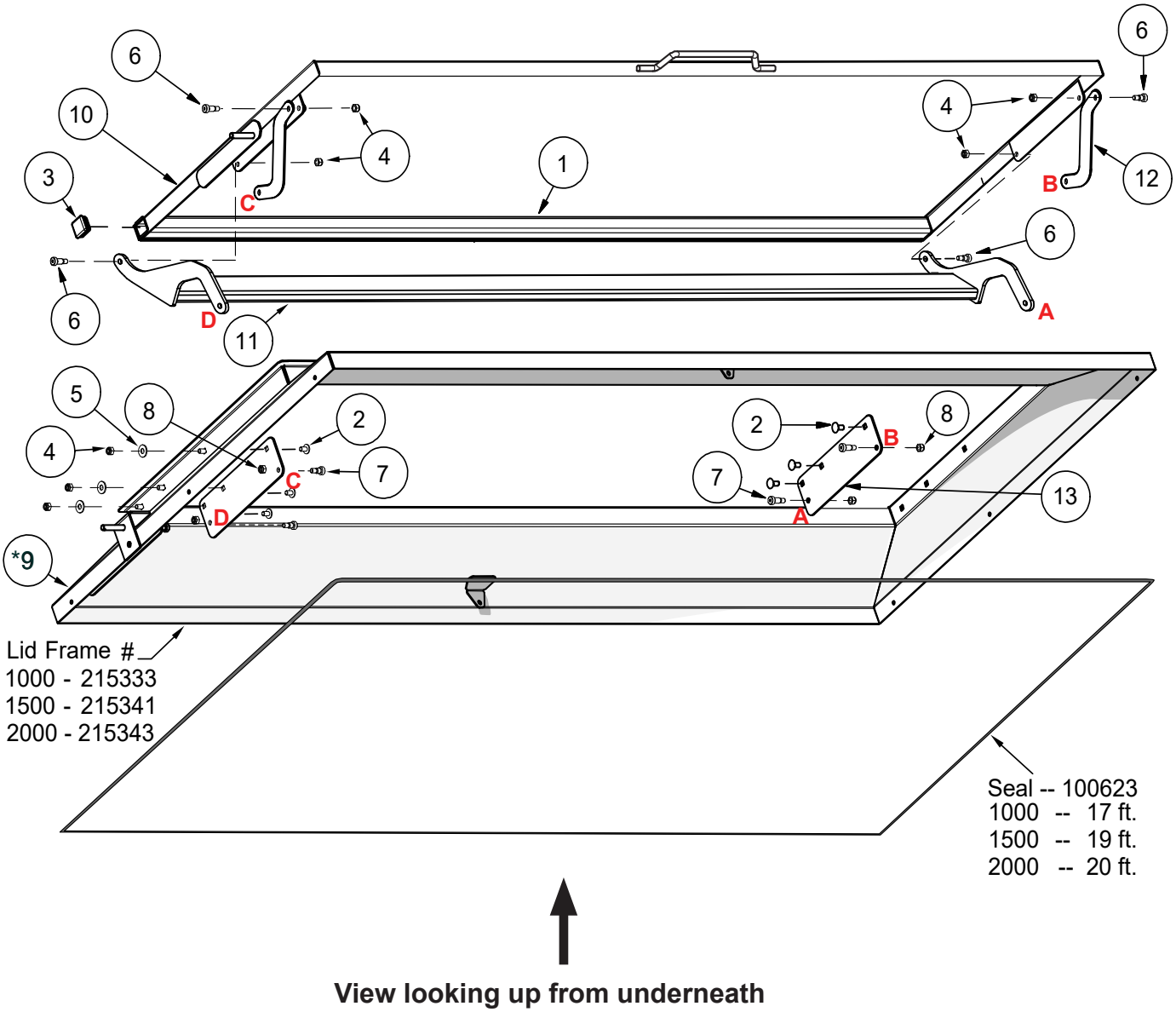

View looking up from underneath

NOTE: #6 & #7 Shoulder Bolts are Different Lengths

ITEM	QTY	PART #	DESCRIPTION
1	16ft	100613	Lid Seal, .50 X .187 X 192
2	6	110020	Bolt, 5/16-18 X 0.75 In Carriage
3	2	110313	1-1/4 Sq Plug
4	10	110600	Nut, 5/16-18, Hex Lock 2 Way
5	6	110665	Washer, 5/16" Flat Standard
6	4	111279	Bolt, 3/8 X 3/8 Shoulder Shcs, Zinc
7	4	111280	Bolt, 1/2 X 5/8 Shoulder Shcs, Zinc
8	4	111281	Nut, 3/8-16 Center Lock, Gr 2, Zinc
9	1	**See ***	Weldment, Lid Frame
10	1	215334	Weldment, Feeder Lid
11	1	215475	Weldment, Lid Hinge W/ Updated Holes
12	2	260947	Lid Hinge W/ Updated Holes, Short
13	2	260948	Lid Hinge W/ Updated Holes, Side Mount

DRIVE SHIELD

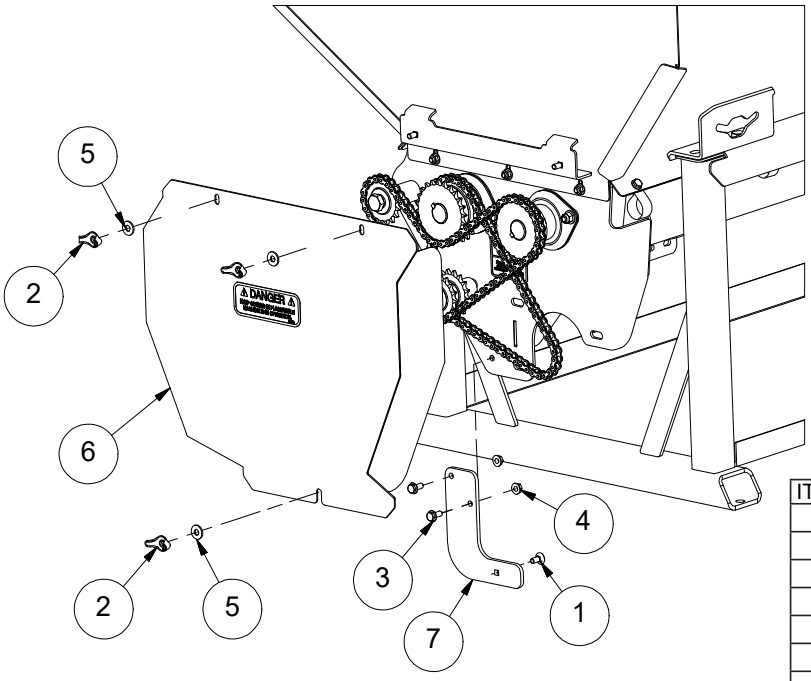

ITEM	QTY	PART #	DESCRIPTION
1	1	110020	Bolt, 5/16-18 X 0.75 In Carriage
2	3	110327	Nut, 5/16-18 Wing
3	2	110444	Bolt, 5/16-18 X 0.75, Wiz Flange
4	2	110606	Nut, 5/16-18 Wiz Flange
5	3	110665	Washer, 5/16" Flat Standard
6	1	215379	Shield, Feeder, 2017
7	1	260670	Shield Support

LIFT HANDLE & LATCH

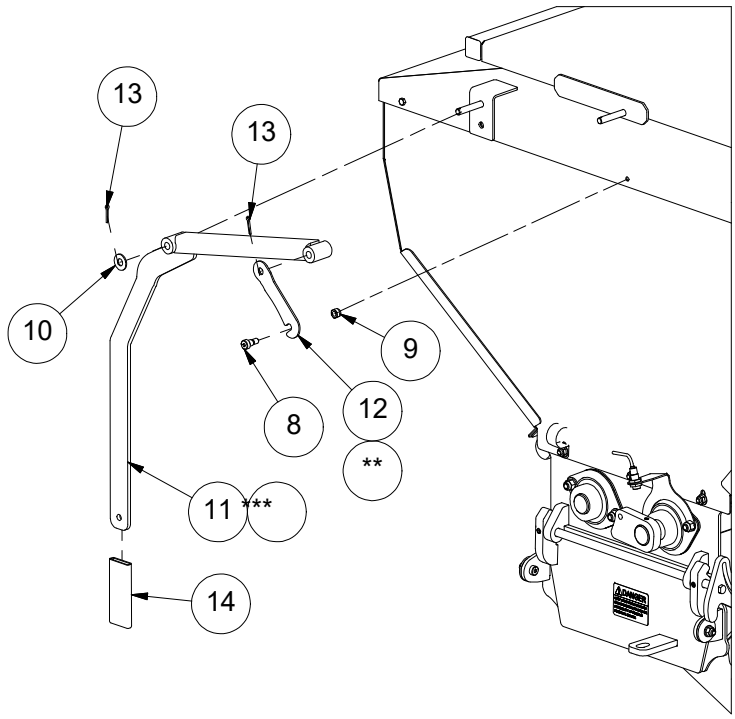

ITEM	QTY	PART #	DESCRIPTION
8	1	110439	Bolt, 3/8 X 3/8 Shoulder Shcs
9	1	110603	Nut, 5/16-18 Lock (Nylon)
10	1	110676	Washer, 3/8" Flat Standard
11	1	215318	Lid Lift Bar, External, 1000 & 1500
***	1	215346	Lid Lift Bar, External, 2000
12	1	260549	Lid Latch, 1500 & 2000
**	1	260529	Lid Latch, 1000
13	2	510249	Cotter Pin, 1/8 X 0.75
14	1	**910044**	Cover, Vinyl .25 X 1.5 X 4 Grip

AGITATOR DRIVE (COTTON EDITION)

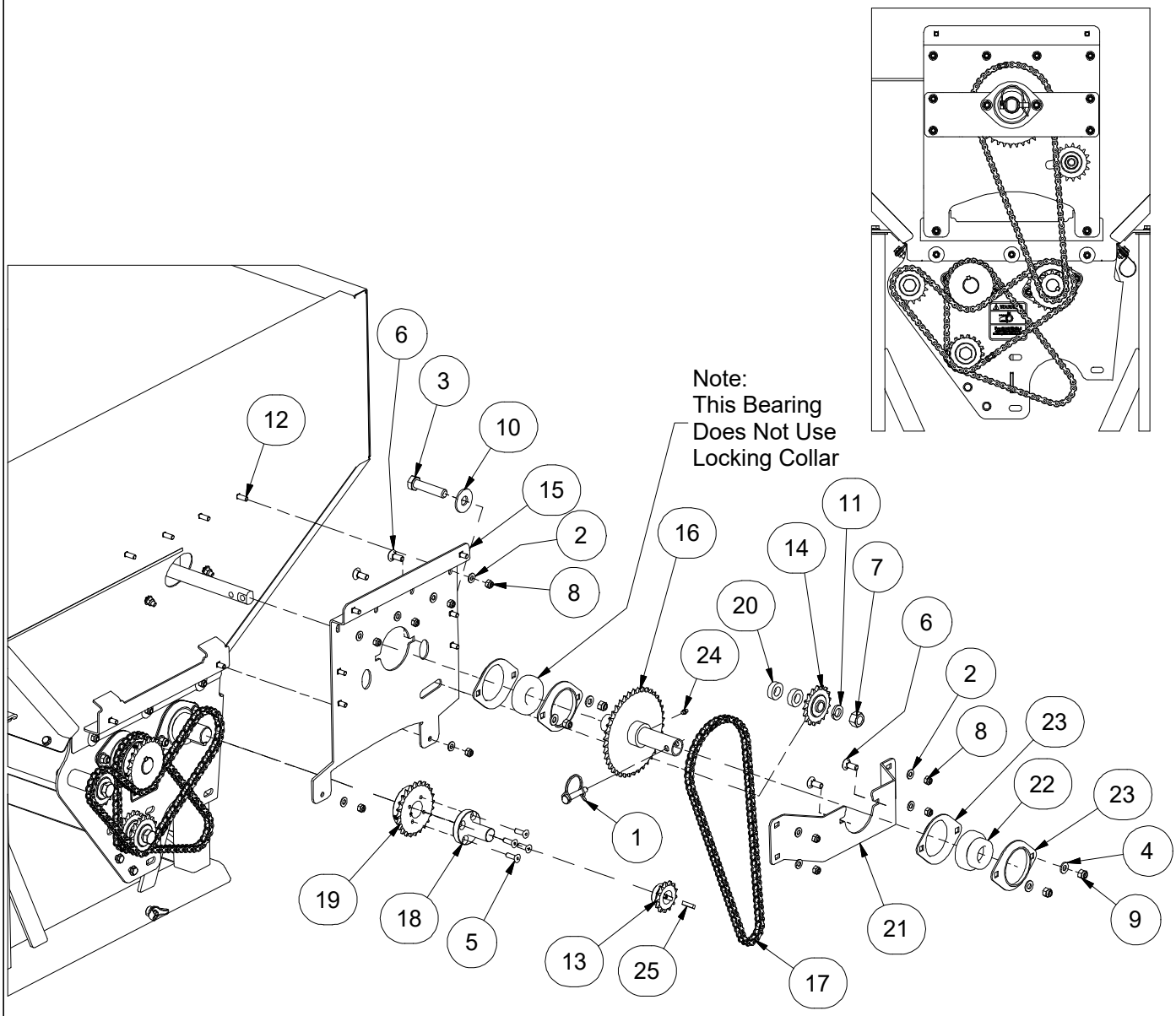

ITEM	QTY	PART #	DESCRIPTION	ITEM	QTY	PART #	DESCRIPTION
1	1	102118	Pin, Lock .375 X 1.5 , Rnd Wire	14	1	142013	Sprocket, 4017 Idler, 5/8
2	8	110069	Washer, 5/16" Flat Sae	15	1	215402	Bearing Mnt Plate, Agitator Drive
3	1	110087	Bolt, 5/8-11 X 2.75	16	1	215406	Agitator Drive Sprocket
4	4	110155	Washer, 3/8" Flat Sae	17	1	240012	Chain, Drive, Cotton Seed Agitator
5	4	110328	Bolt, 5/16-18 X 1 Flt Hd Skt	18	1	242008	Stub Shaft, Agitator Drive
6	4	110556	Bolt, 3/8-16 X 1 In Carriage	19	1	242009	Sprocket, 40b24 X 1-1/4, Agitator Drive
7	1	110597	Nut, 5/8-11 Hex	20	2	260679	Spacer, 1.25 X .69 X .4
8	8	110603	Nut, 5/16-18 Lock (Nylon)	21	1	260745	Bearing Support, Agitator Drive
9	4	110618	Nut, 3/8-16 Lock Nylon Insert	22	1	410232	Bearing Insert, 2.83, 1.25" Ec Lk
10	1	110650	Washer, 5/8" Flat Standard	23	4	410233	Flange, 2 Hole
11	1	110655	Washer, 5/8" Lock	24	1	510174	Grease Zerk, 1/4-28 St
12	2	110871	Bolt, 5/16-18 X 1 In Carriage	25	1	510228	Key, 1/4 X 1/4 X 1.0 Under
13	1	142012	Sprocket, 4013 X 1				

AGITATOR ASSEMBLY (COTTON EDITION)

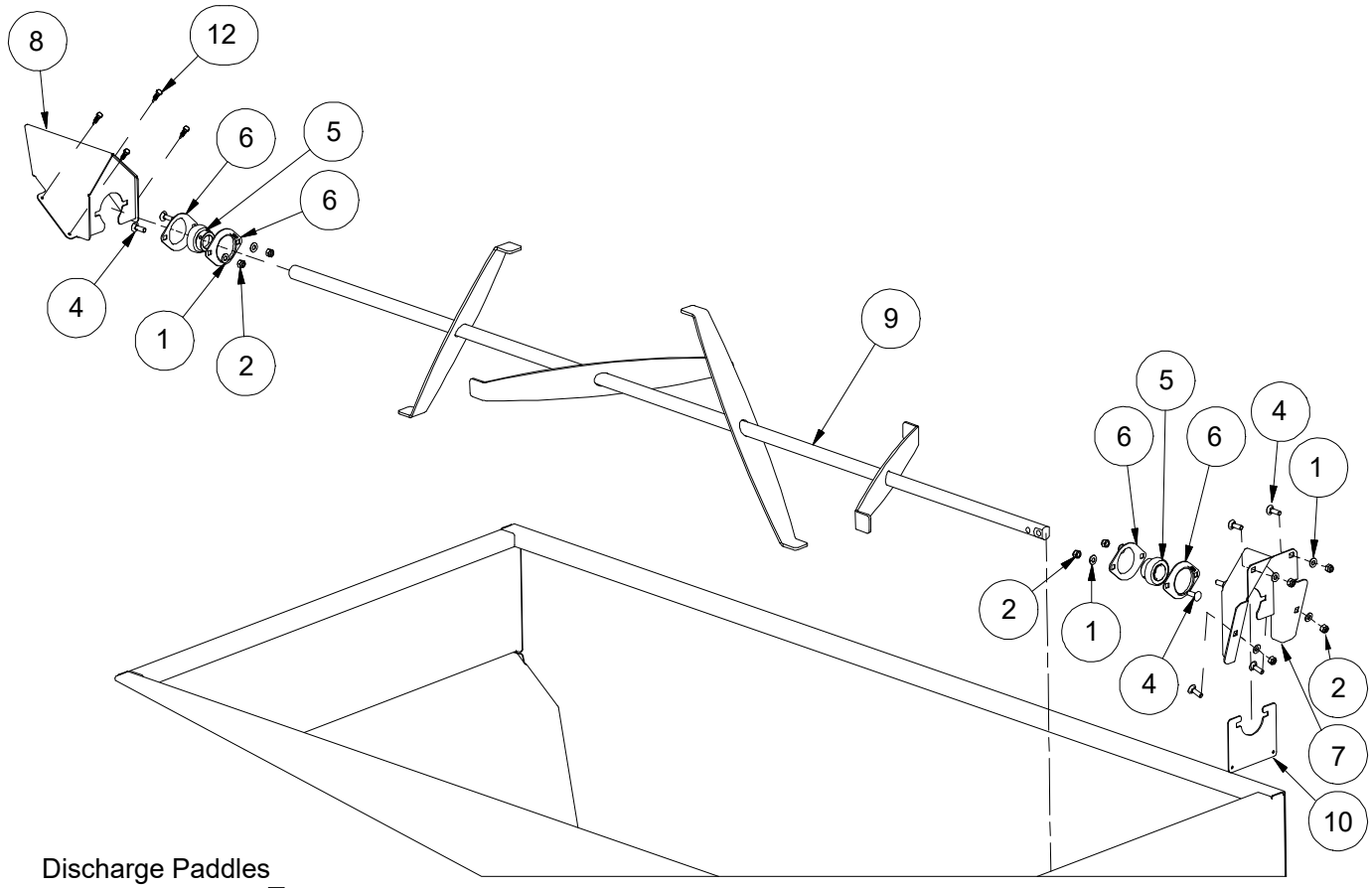

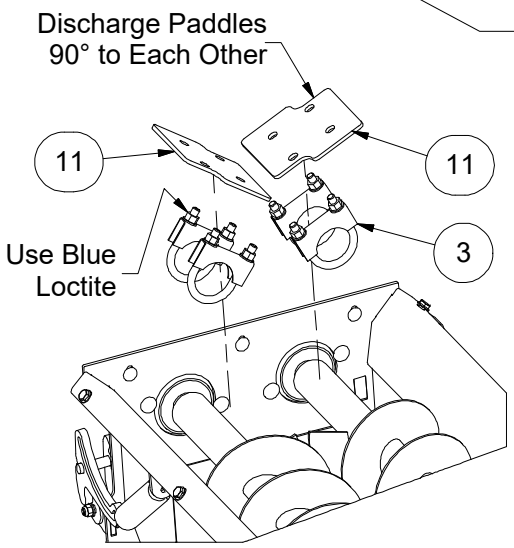

ITEM	QTY	PART #	DESCRIPTION
1	8	110069	Washer, 5/16" Flat Sae
2	8	110603	Nut, 5/16-18 Lock (Nylon)
3	4	110757	Clamp, 1 3/4" Exhaust
4	8	110871	Bolt, 5/16-18 X 1 In Carriage
5	2	142018	Bearing, 52mm Sphere OD, 1.0 ID, Ecc Lock
6	4	142019	Flange, 52mm, 2 Bolt
7	1	215403	Bearing Mnt Right, Agitator Shaft
8	1	215404	Bearing Mnt Left, Agitator Shaft
9	1	215405	Weldment, Agitator Shaft
10	1	260750	Bearing Shield
11	2	260751	Agitator, Discharge Plate
12	4	710586	Screw, 1/4 X 1 Tek Self-Tap

CHUTE EXTENSION ASSEMBLY

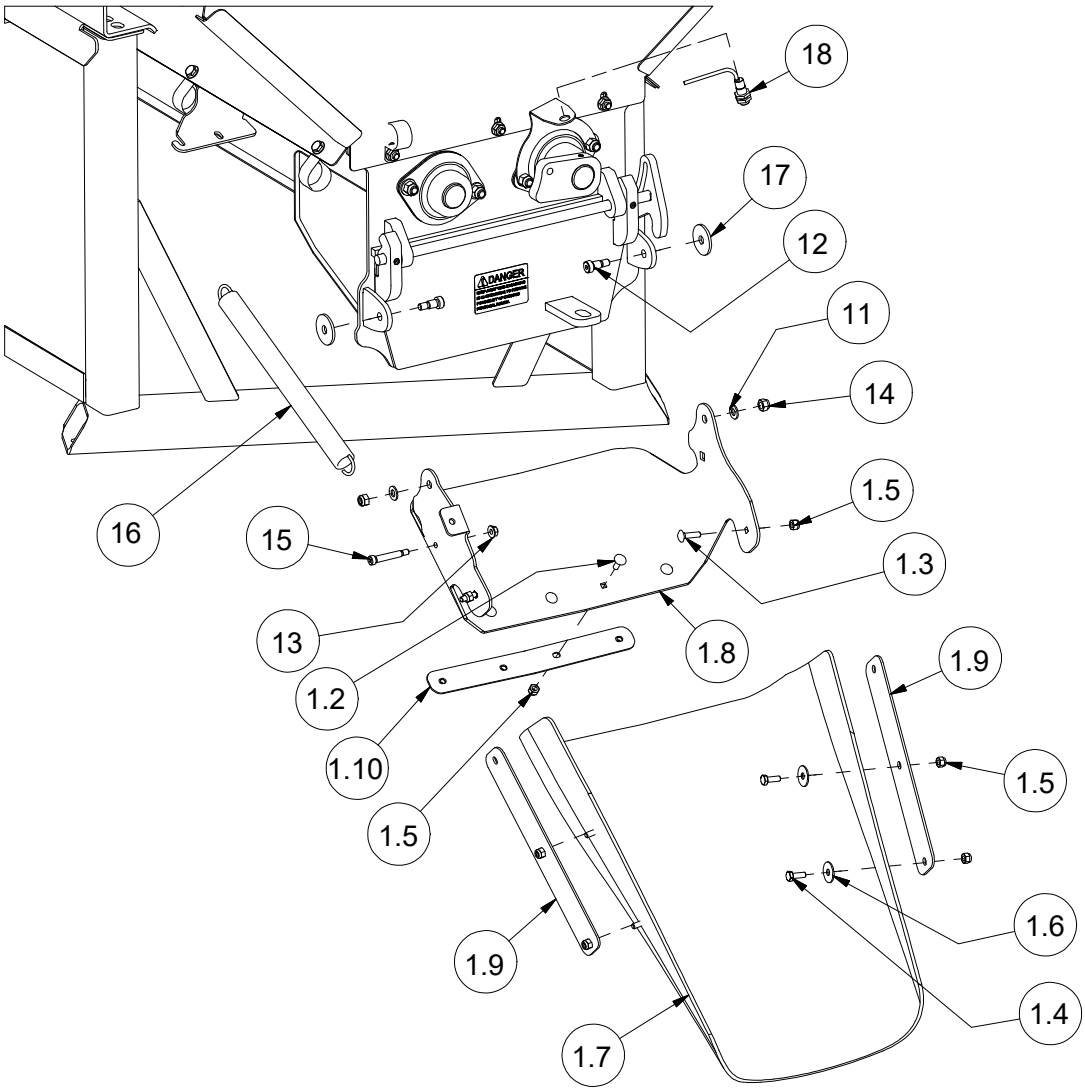

Proximity
Sensor
Part #235027

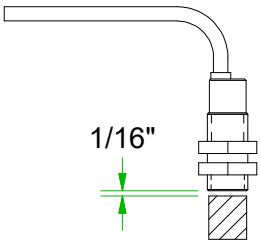

ITEM	QTY	PART #	DESCRIPTION
1	1	275006	Kit, Chute Extension
1.2	4	110154	Bolt, 1/4-20 X 0.75 In Carriage
1.3	2	110326	Bolt, 1/4-20 X 1 In Carriage
1.4	4	110561	Bolt, 1/4-20 X .75
1.5	10	110630	Nut, 1/4-20 Lock (Nylon Insert)
1.6	4	111033	Washer, 1/4" X 1" Od, Plain
1.7	1	260473	Rubber Chute
1.8	1	260534	Chute Extension
1.9	2	260536	Chute Extension, Side Support
1.10	1	260537	Chute Extension, Doubler Plate
11	2	110069	Washer, 5/16" Flat Sae
12	2	110289	Bolt, 3/8 X 1/2 Shoulder Shcs
13	1	110290	Nut, 1/4-20 Wiz Flange
14	2	110603	Nut, 5/16-18 Lock (Nylon)
15	1	110767	Bolt, 5/16 X 1.5 Shoulder Shcs
16	1	202088	Spring, 1.06od X 12l X .135 Wire
17	2	211747	Friction Washer 1.5"
18	1	235027	Sensor, Proximity, With Plug

Flatbed Model #	Standard Dummy Arm	Cake Feeder Dummy Arms			
		2000			
		Front Half	Back Half		
675	215150	**NA**	**NA**		
676	215249	**NA**	**NA**		
677	215191	**NA**	**NA**		
679	215208	215355	215356		
682	215145	**NA**	**NA**		
684	215193	215360	215356		
687	215198	215360	215361		
688	215200	215360	215362		
778	215160	**NA**	**NA**		
776	215257	**NA**	**NA**		
782	215158	**NA**	**NA**		
784	215202	215367	215372		
787	215204	215367	215373		
788	215206	215367	215374		

Decals Must Be Purchased Seperately

Decals	
Model #	Part #
675	202095
676	202096
677	202097
679	202098
682	202099
684	202100
687	202101
688	202102
778	202105
776	202104
782	202106
784	202107
787	202108
788	202109

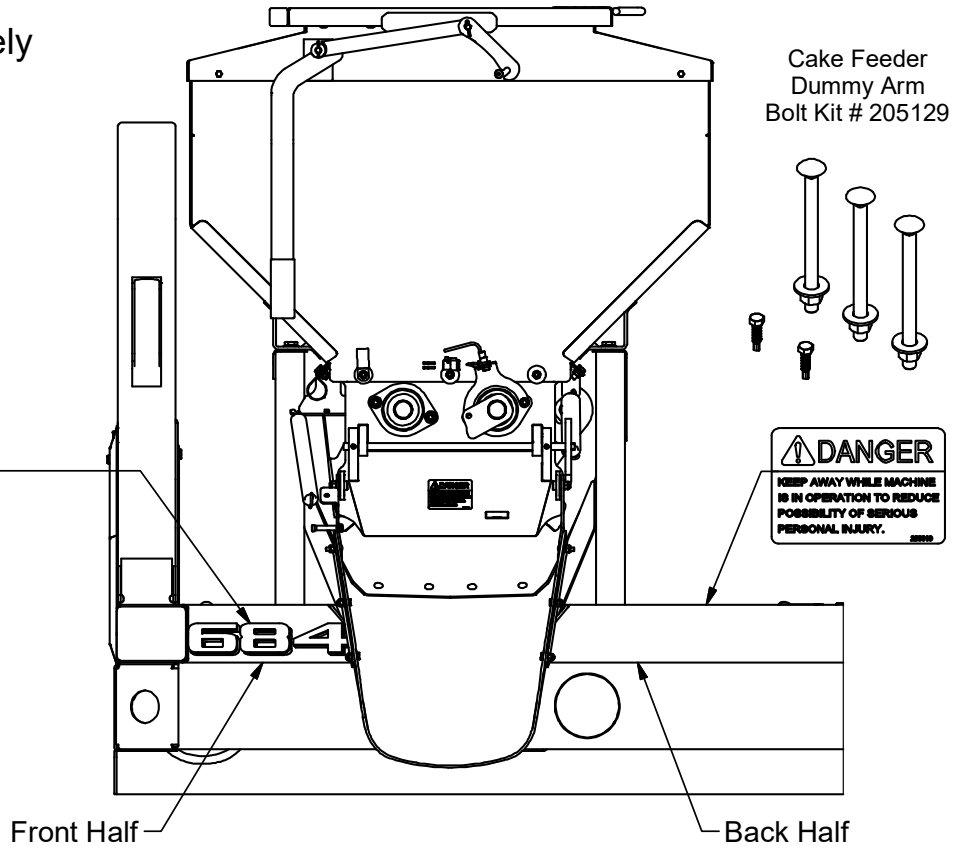

6/6/2018

DRIVE SHIELD (COTTON EDITION)

Parts List			
ITEM	QTY	PART #	DESCRIPTION
1	1	110020	Bolt, 5/16-18 X 0.75 in Carriage
2	3	110327	NUT, 5/16-18 WING
3	2	110444	BOLT, 5/16-18 X 0.75, WIZ FLANGE
4	2	110606	NUT, 5/16-18 WIZ FLANGE
5	3	110665	WASHER, 5/16" FLAT STANDARD
6	1	215407	Weldment, Shield, Agitator Drive
7	1	260670	Shield Support

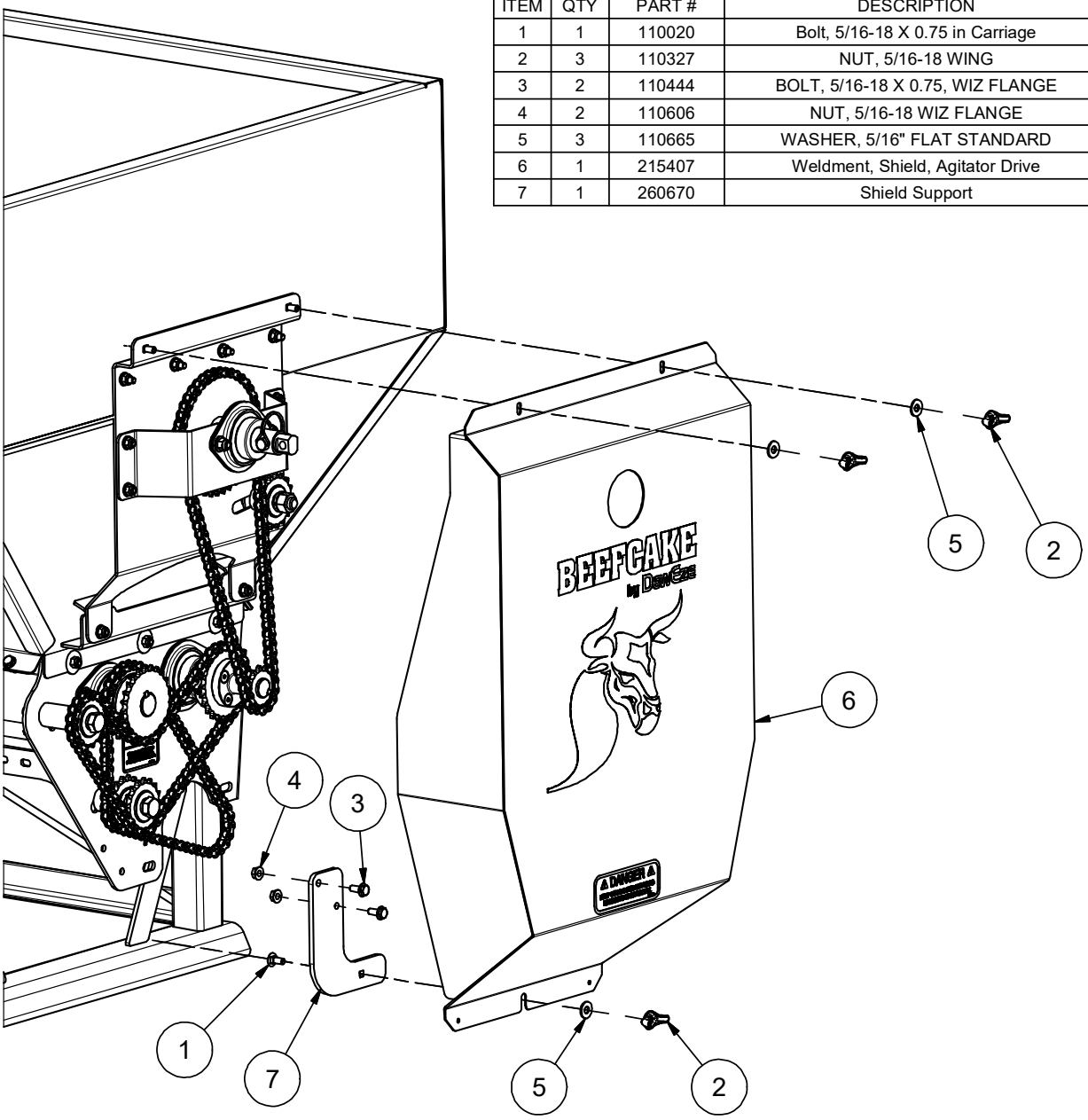

1/3/2019

DECALS (COTTON EDITION)

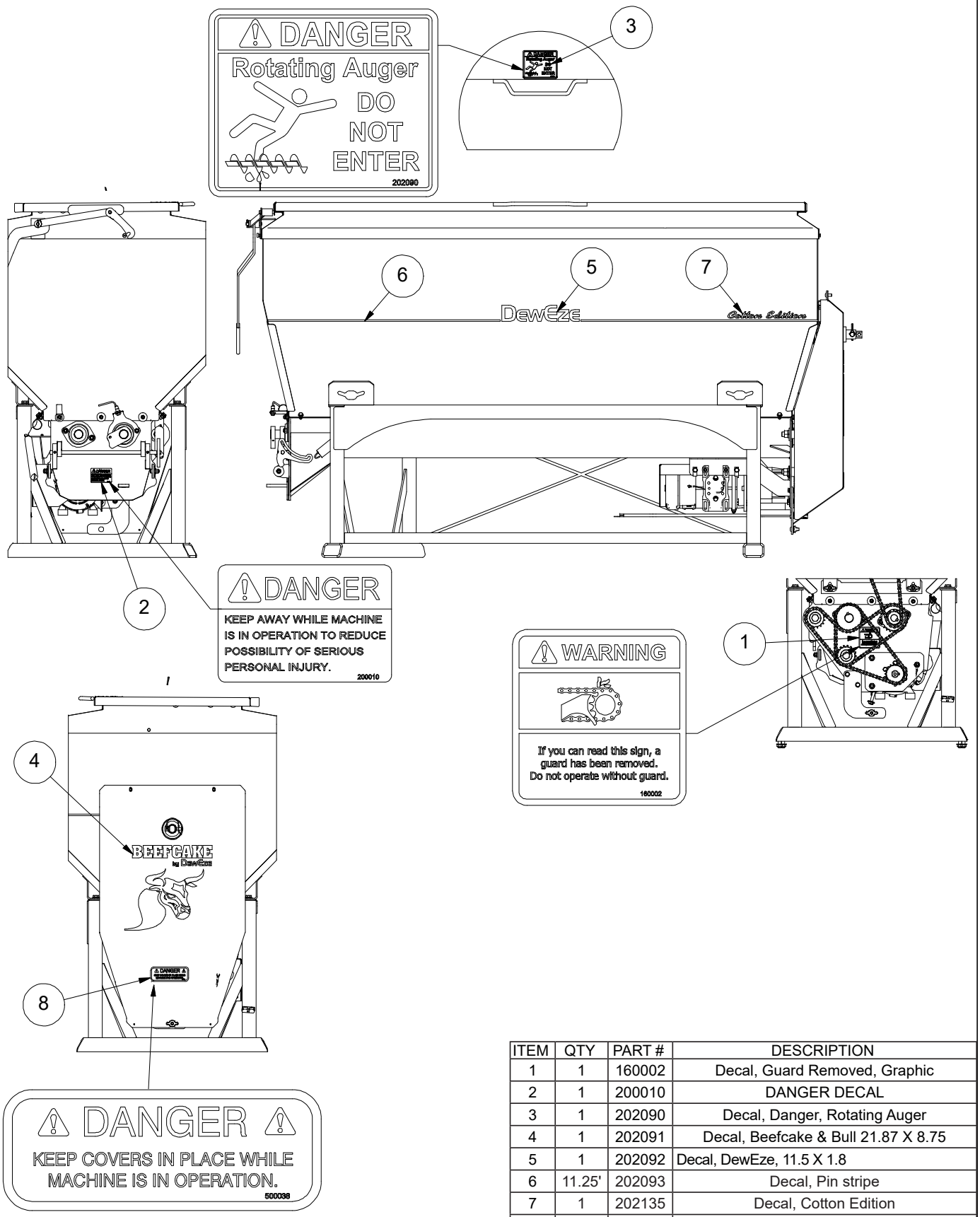

ITEM	QTY	PART #	DESCRIPTION
1	1	160002	Decal, Guard Removed, Graphic
2	1	200010	DANGER DECAL
3	1	202090	Decal, Danger, Rotating Auger
4	1	202091	Decal, Beefcake & Bull 21.87 X 8.75
5	1	202092	Decal, DewEze, 11.5 X 1.8
6	11.25'	202093	Decal, Pin stripe
7	1	202135	Decal, Cotton Edition
8	1	500038	Decal, Danger Keep Covers In Place

HYDRAULIC DRIVE

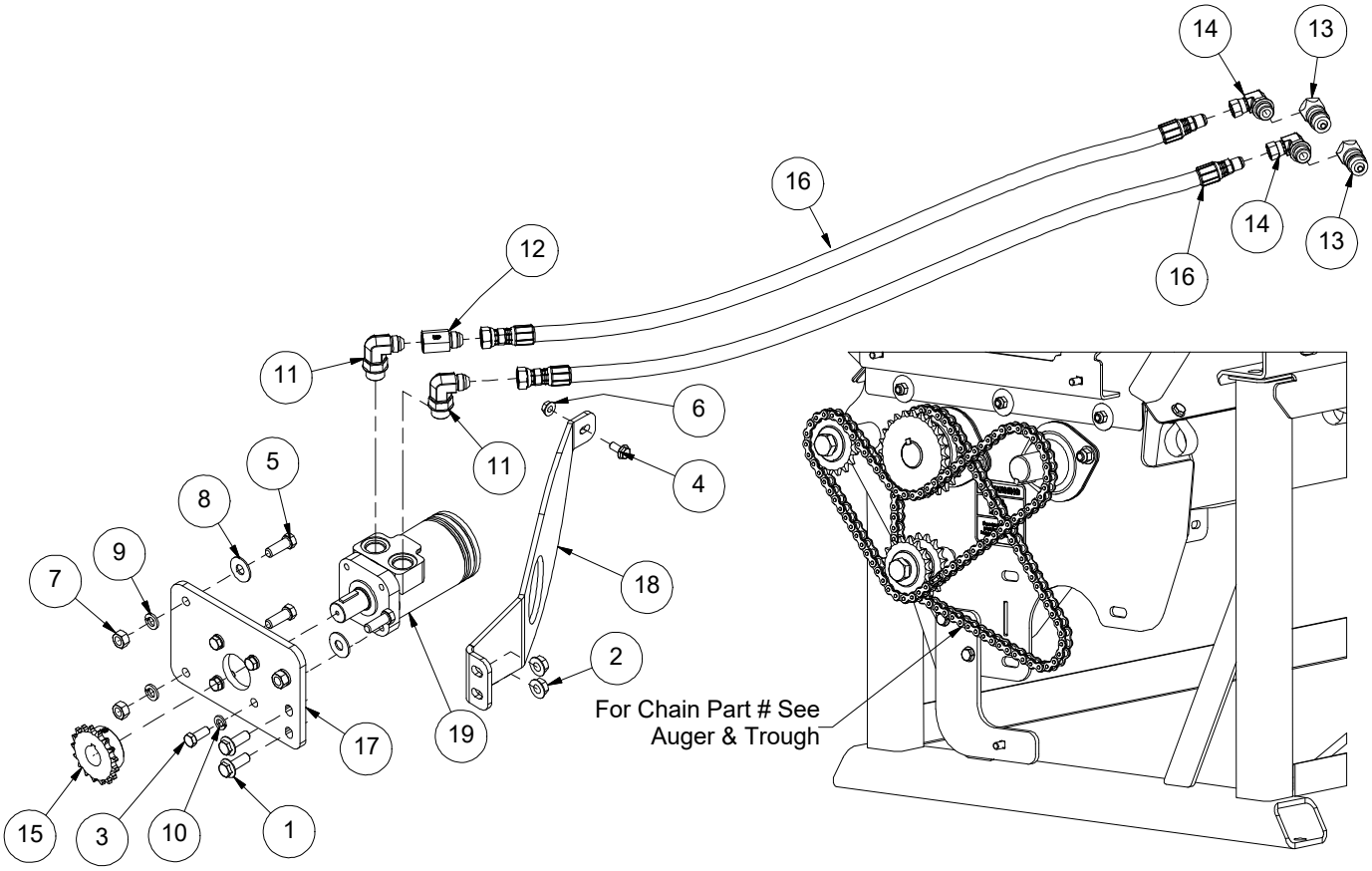

KIT, HYD DRIVE (14.1) **205127**			
ITEM	QTY	PART #	DESCRIPTION
1	2	110254	Bolt, 7/16-14 X 1.25, Wiz Flange
2	2	110337	Nut, 7/16-14 Wiz Flange
3	4	110420	Bolt, 3/8-16 X 1.0
4	1	110444	Bolt, 5/16-18 X 0.75, Wiz Flange
5	3	110539	Bolt, 7/16-14 X 1.25
6	1	110606	Nut, 5/16-18 Wiz Flange
7	3	110641	Nut, 7/16-14
8	3	110670	Washer, 7/16" Flat Standard
9	3	**110671**	Washer, 7/16" Lock
10	4	110672	Washer, 3/8" Lock
11	2	120245	Adapter, 8mj-10mb90
12	1	120535	Valve, Check, 8fj-8mj
13	2	120582	Coupler, Pioneer Male, Orb
14	2	120718	Adapter, 8mb-6fjx90
15	1	142017	Sprocket, 40bs17 X 1.0
16	2	220745	Hose, .375 X 36.0 6-8fjx/6mj
17	1	260669	Drive Mount, Hydraulic
18	1	260680	Hydraulic Mount Gusset
19	1	420128	Motor, Eaton 101-1014 (14.1 Ci)

ELECTRIC DRIVE (2021 +)

Brushes Springs & Retainers			
ITEM	QTY	PART #	DESCRIPTION
1	2	232189	Clip, Brush Leeson
2	2	232190	Spring, Brush Leeson
3	2	232191	Brush, Motor Leeson

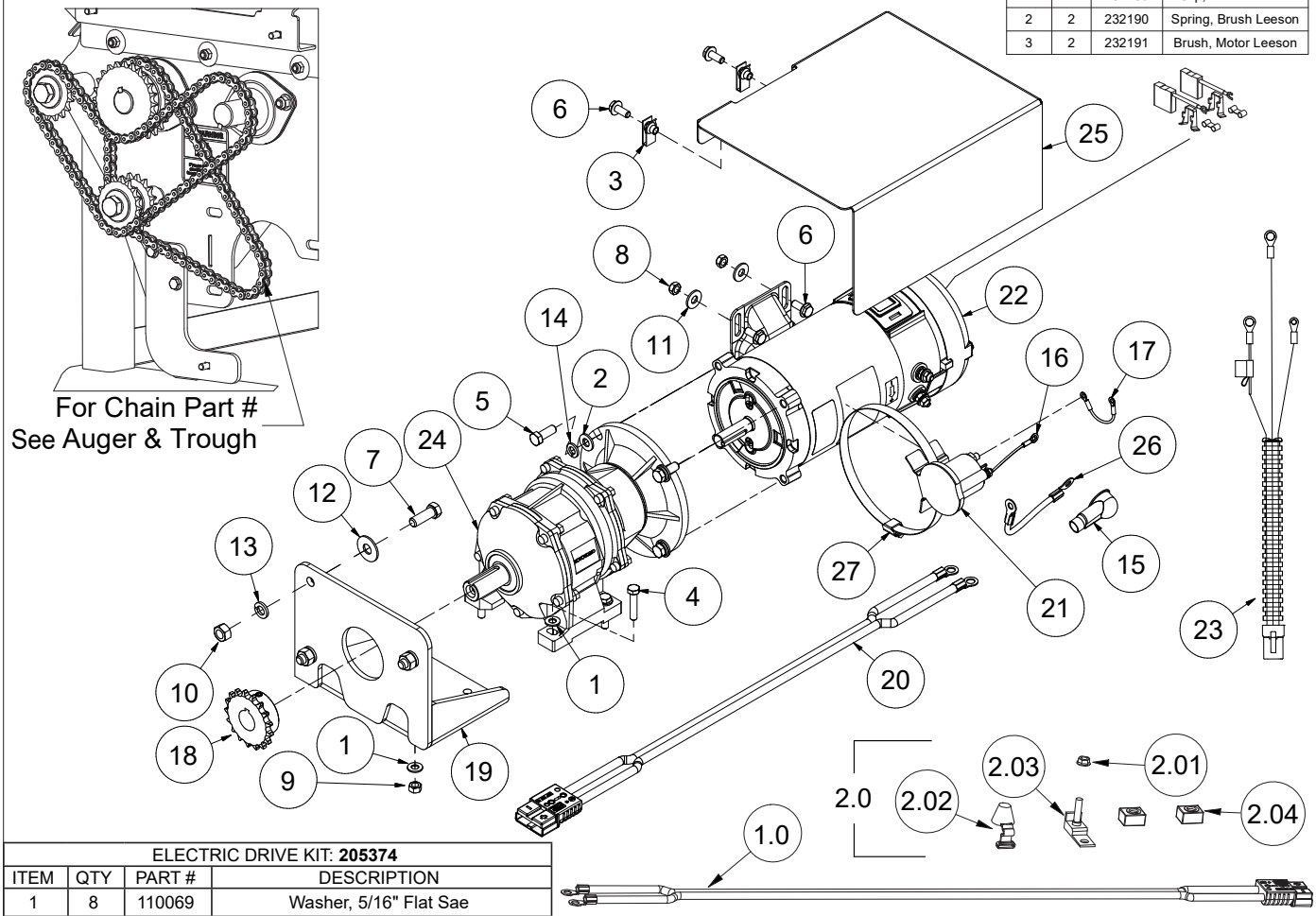

ELECTRIC DRIVE KIT: **205374**			
ITEM	QTY	PART #	DESCRIPTION
1	8	110069	Washer, 5/16" Flat Sae
2	4	110155	Washer, 3/8" Flat Sae
3	2	110319	Nut, 5/16-18 U-Type .75l
4	4	110377	Bolt, 5/16-18 X 1-1/2
5	4	110420	Bolt, 3/8-16 X 1.0
6	4	110444	Bolt, 5/16-18 X 0.75, Wiz Flange
7	3	110539	Bolt, 7/16-14 X 1.25
8	2	110600	Nut, 5/16-18, Unitorque Lock
9	4	110608	Nut, 5/16-18
10	3	110641	Nut, 7/16-14
11	2	110665	Washer, 5/16" Flat Standard
12	3	110670	Washer, 7/16" Flat Standard
13	3	110671	Washer, 7/16" Lock
14	4	110672	Washer, 3/8" Lock
15	1	130068	Terminal Protector, Red, 1-2ga
16	1	132148	Terminal, Ring, 16-14, 1/4, Heat Shrink
17	1	132163	Flyback Diode Assembly, Cake Feeder
18	1	142017	Sprocket, 40bs17 X 1.0
19	1	215429	Bracket, Gear Reducer
20	1	230169	Battery Cable Qc, 2ga Twin Lead, 30"
21	1	232103	Solenoid, 4 Post, 12vdc Contactor
22	1	232110	Motor, 12v Dc, 3/4 Hp
23	1	232113	Harness, Cake Feeder, Electric
24	1	242013	Gear Reducer, Inline, 30.55:1
25	1	260674	Motor Shield, Electric, 2017
26	1	532084	Cable, 4 Ga. 9", Red
27	1	940028	Clamp, Hose #88 6.00"

ITEM	QTY	PART #	DESCRIPTION
1.0	1	230168	Battery Cable Qc, 2ga Twin Lead, 216"
2.0	1	205137	Kit, Beefcake Fuse And Holder
2.01	1	110141	Nut, M8 X 1.25 Wizflange
2.02	2	132092	Fuse Cover, Buss Cfcover-1r
2.03	1	132093	Fuse Holder, Buss Cfbar1-M8xsp
2.04	1	132094	Fuse 200 Amp, Buss Mrbf-200

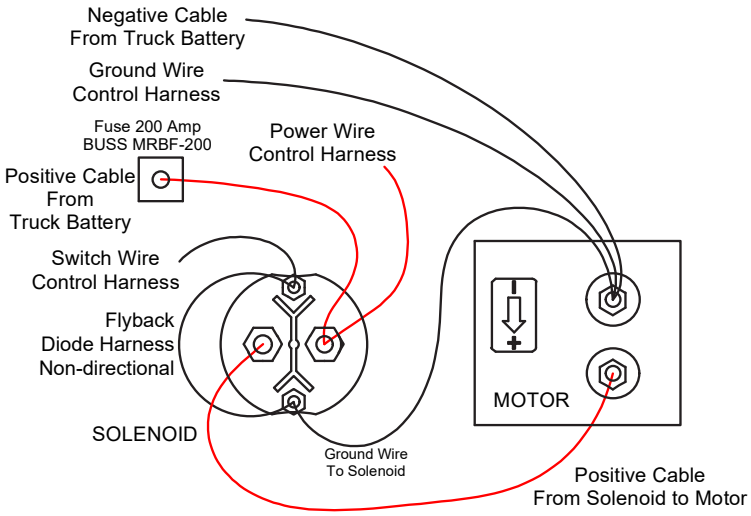

ELECTRIC DRIVE (2017)

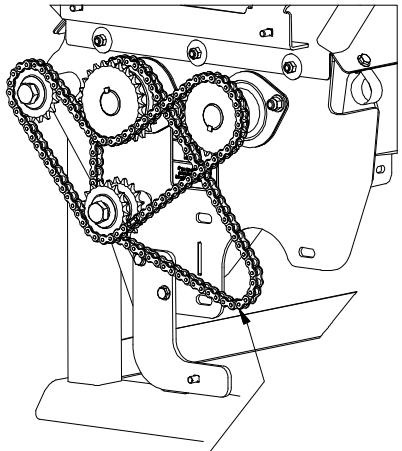

For Chain Part #
See Auger & Trough

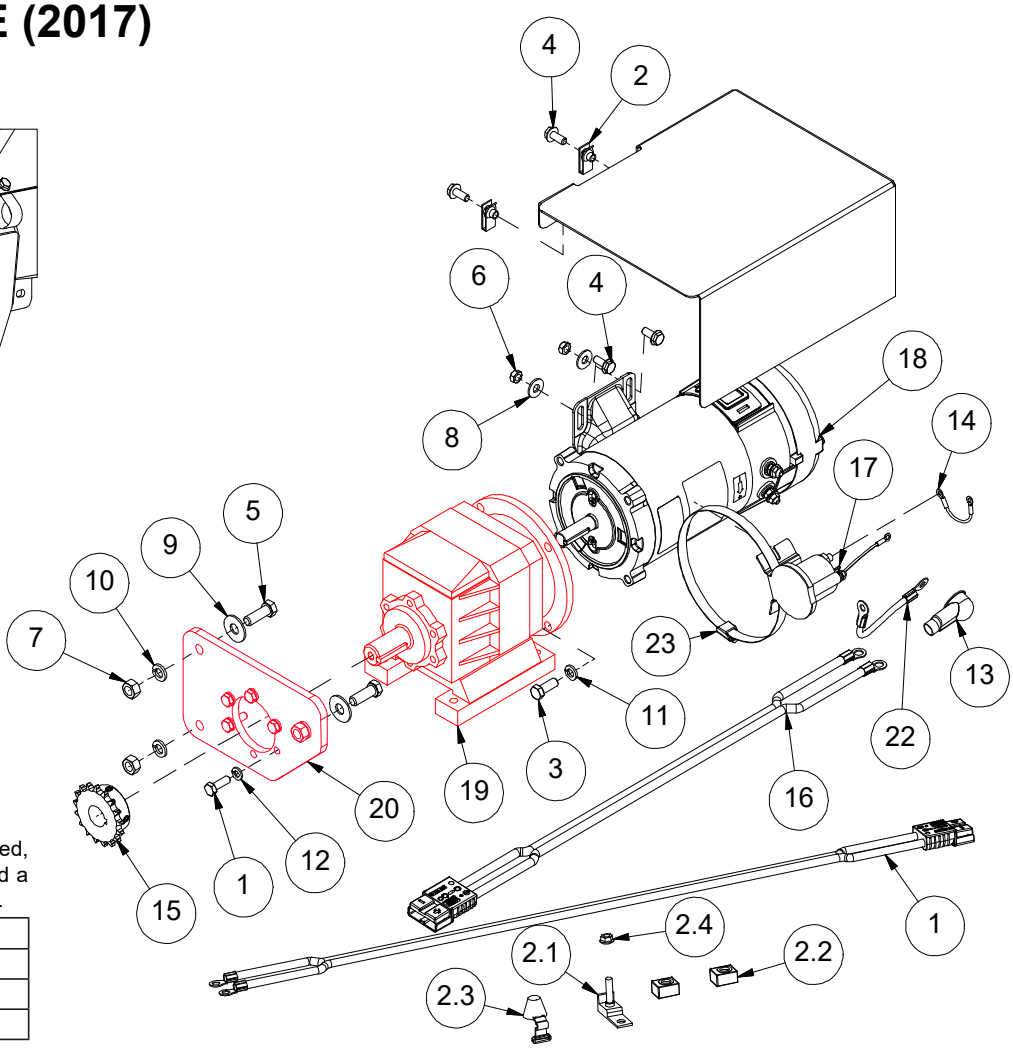

Bulletin: 2012214
*(19) If OBS gear reducer needs replaced, must buy 2021 reducer, it's bracket and a new trough with proper mounting holes.

PART #	DESCRIPTION
215431	Cake Feeder Trough (2021)
242013	Gear Reducer (2021)
215429	Bracket, Gear Reducer (2021)

ITEM	QTY	PART #	DESCRIPTION
1	5	110260	Bolt, M8x1.25 X 25 Gr 10.9
2	2	110319	Nut, 5/16-18 U-Type .75l
3	2	110420	Bolt, 3/8-16 X 1.0
4	4	110444	Bolt, 5/16-18 X 0.75, Wiz Flange
5	3	110539	Bolt, 7/16-14 X 1.25
6	2	110600	Nut, 5/16-18, Unitorque Lock
7	3	110641	Nut, 7/16-14
8	2	110665	Washer, 5/16" Flat Standard
9	3	110670	Washer, 7/16" Flat Standard
10	3	110671	Washer, 7/16" Lock
11	2	110672	Washer, 3/8" Lock
12	5	110674	Washer, 5/16" Lock
13	1	130068	Terminal Protector, Red, 1-2ga
14	1	132163	Flyback Diode Assembly, Cake Feeder
15	1	142017	Sprocket, 40bs17 X 1.0
16	1	230169	Battery Cable Qc, 2ga Twin Lead, 30"
17	1	232103	Solenoid, 4 Post, 12vdc Contactor
18	1	232110	Motor, 12v Dc, 3/4 Hp
*19	1	242006	OBS Gear Reducer, Inline, 29.4:1
20	1	260668	Drive Mount, Electric
21	1	260674	Motor Shield, Electric, 2017
22	1	532084	Cable, 4 Ga. 9", Red
23	1	940028	Clamp, Hose #88 6.00"

ITEM	QTY	PART #	DESCRIPTION
1	1	230168	Battery Cable Qc, 2ga Twin Lead, 216"
2	1	205137	Kit, Beefcake Fuse And Holder
2.1	1	132093	Fuse Holder, Buss Cfbar1-M8xsp
2.2	2	132094	Fuse 200 Amp, Buss Mrbf-200
2.3	1	132092	Fuse Cover, Buss Cfcover-1r
2.4	1	110141	Nut, M8 X 1.25 Wizflange

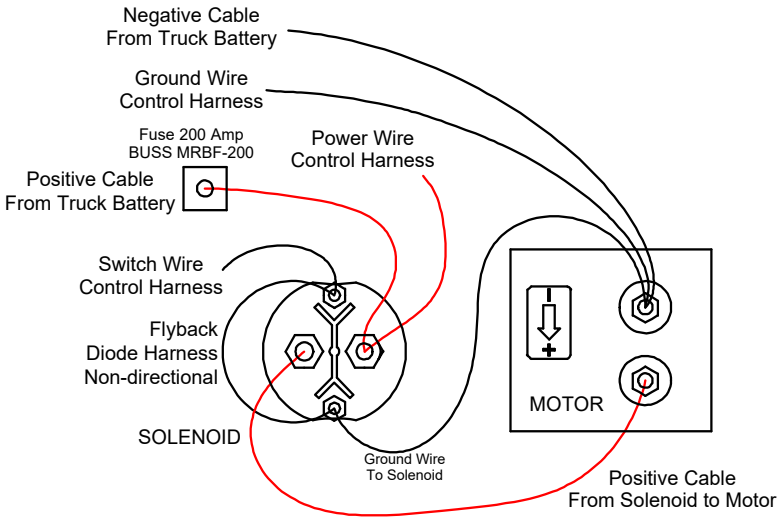

CORDED: BEEFCAKE

Parts List			
ITEM	QTY	PART #	DESCRIPTION
1	1	132131	Switch, Rocker Min. Dpdt, (On)-Off-(On)
2	2	132132	Switch, Rocker Min. Spst, On-Off, Ilum.
3	1	132176	Counter, Display, Backlight Display
4	1	230174	Top Housing, Hand Control
5	1	150001	Top Housing, Hand Control
6	1	150003	Bottom Housing, Hand Control
7	4	150013	Screw, #6 X 1/4 Type F
8	2	150014	Screw, #6 X 1 Sheetmetal
9	2	150015	Screw, #6 X 1.5 Sheetmetal
10	1	150046	Switch Plate, Feeder, Hand Control
11	1	202089	Decal, Cake Feeder Hand Control
12	1	230173	Cable, Hand Control, Feeder
13	1	230174	Jumper Wire, Display Power

KITS			
ITEM	QTY	PART #	DESCRIPTION
1	1	150048	Kit, Hand Control Corded

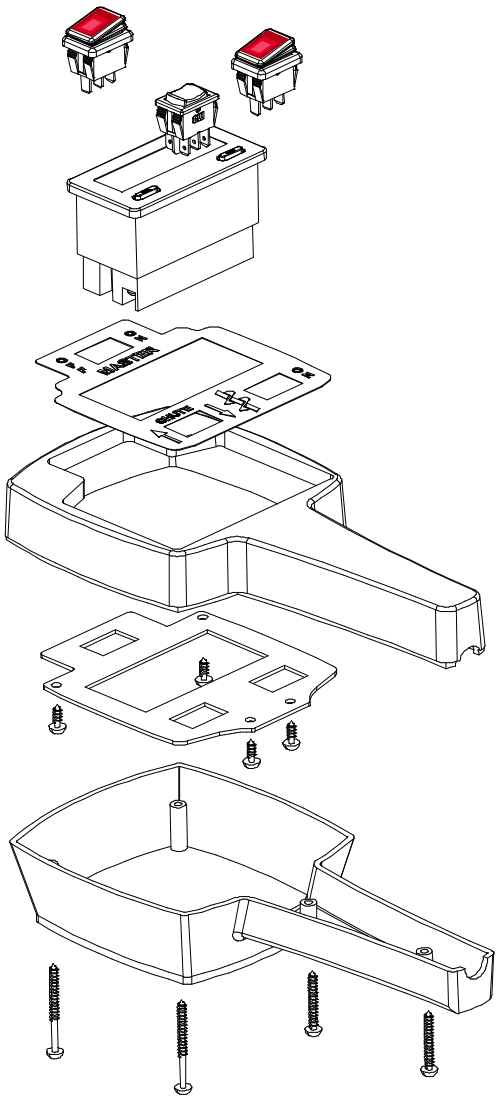

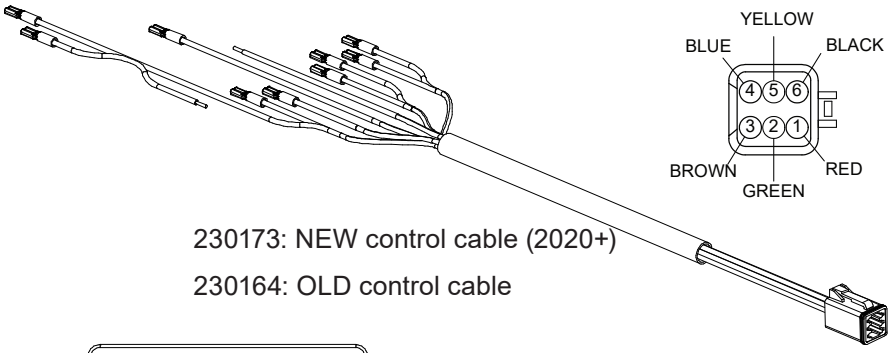

230173: NEW control cable (2020+)

230164: OLD control cable

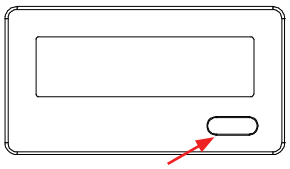

These were battery powered & the batteries are soldered in place.

OBSOLETE = 1 BUTTON ON FACE

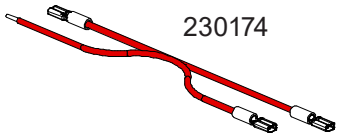

230174

132176

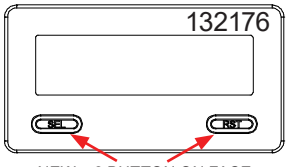

New displays ADD A POWER WIRE. Deweze provides a pre-made JUMPER.

NEW = 2 BUTTON ON FACE

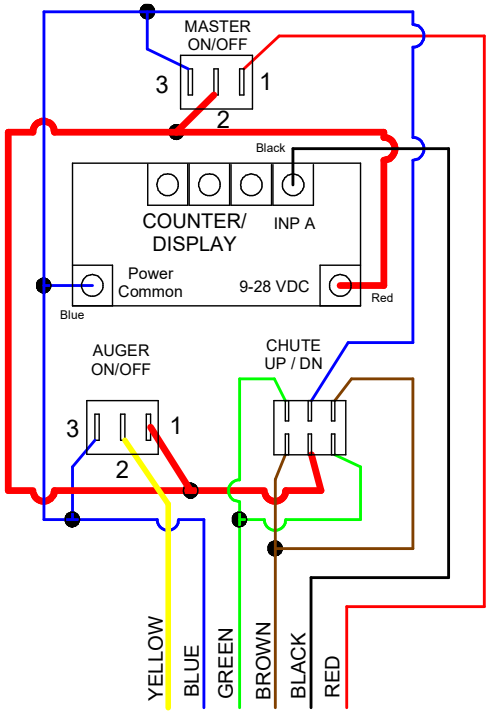

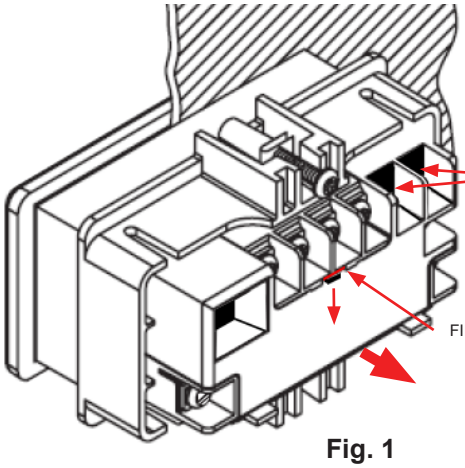

NOTE: DIP SWITCHES need to be:

1 = DOWN 2,3,4 = UP
(see **Fig. 1**)

DIP SWITCHES ACCESSED WITH A TOOTHPICK OR OTHER SUCH IMPLEMENT

FINGERNAIL OR SIMILAR PUSH DOWN TAB PULL BACKING OFF

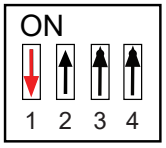

Fig. 1

ELECTRICAL HARNESSES

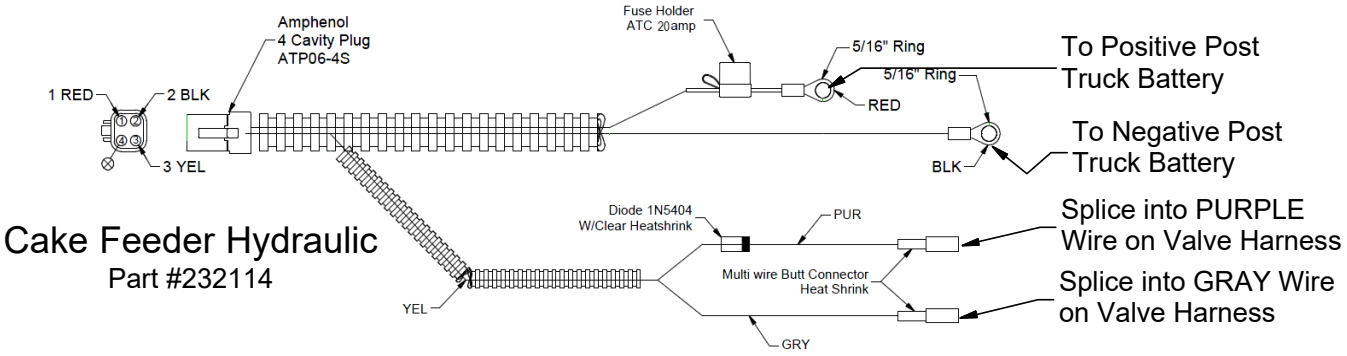

Cake Feeder Hydraulic
Part #232114

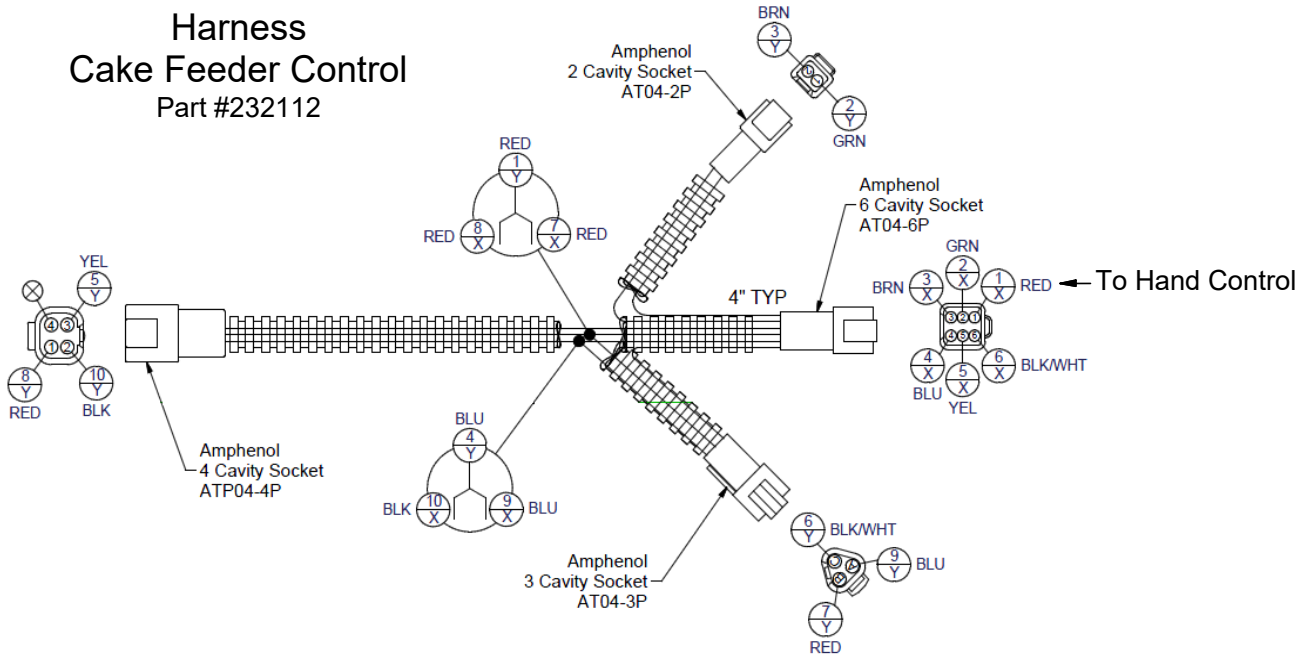

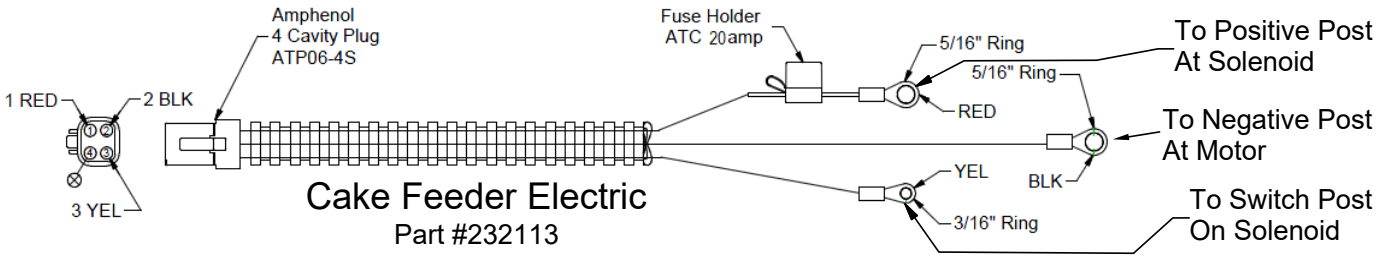

Cake Feeder Electric
Part #232113

SCHEMATIC

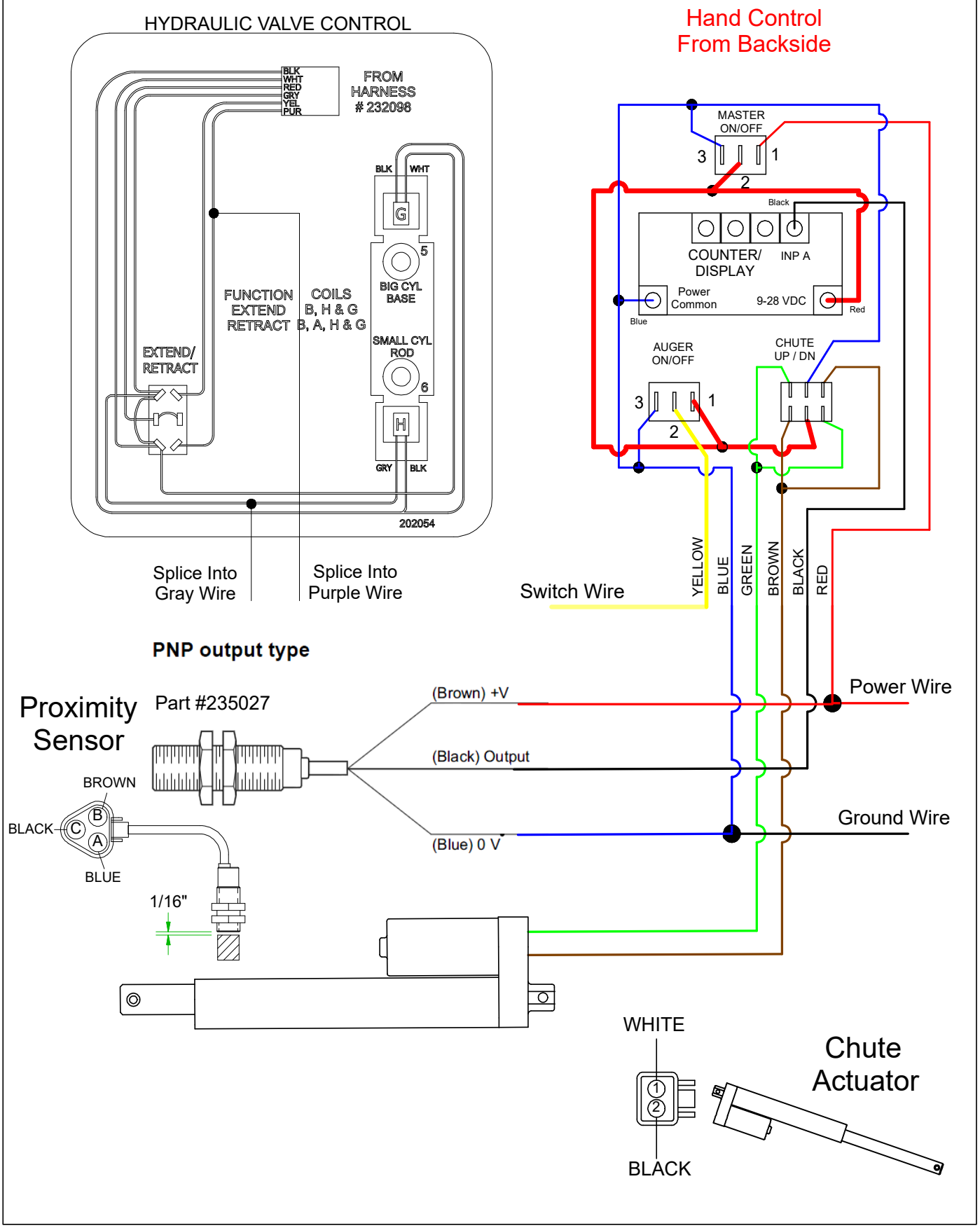
HYDRAULIC VALVE CONTROL
BLK
WHT
RED
GRY
YEL
PUR
FROM HARNESS # 232098
BLK
WHT
G
5
BIG CYL BASE
FUNCTION
EXTEND
RETRACT
COILS
B, H & G
B, A, H & G
SMALL CYL ROD
6
H
GRY
BLK
EXTEND/ RETRACT
202054
Splice Into Gray Wire
Splice Into Purple Wire
Hand Control From Backside
MASTER ON/OFF
3
1
2
Black
COUNTER/ DISPLAY
INP A
Power Common
9-28 VDC
Blue
Red
AUGER ON/OFF
CHUTE UP / DN
3
1
2
Switch Wire
YELLOW
BLUE
GREEN
BROWN
BLACK
RED
PNP output type
Proximity Sensor
Part #235027
(Brown) +V
(Black) Output
(Blue) 0 V
Power Wire
Ground Wire
BROWN
BLACK
BLUE
B
C
A
1/16"
WHITE
BLACK
1
2
Chute Actuator

ACTUATOR

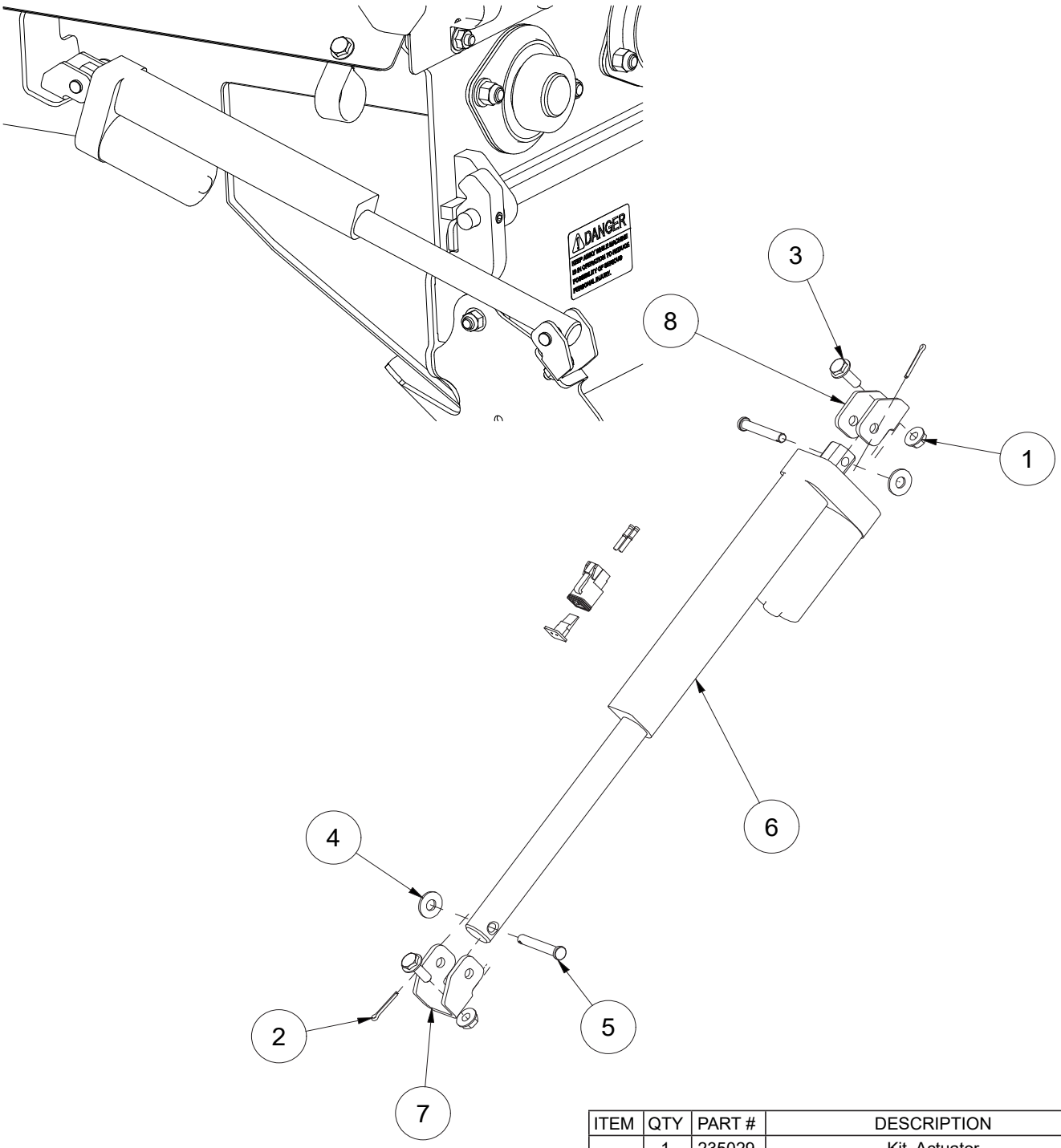

ITEM	QTY	PART #	DESCRIPTION
	1	235029	Kit, Actuator
1	2	110290	Nut, 1/4-20 Wiz Flange
2	2	110300	Cotter Pin, 3/32 X 0.75
3	2	110468	Bolt, 1/4-20 X 0.75, Wiz Flange
4	2	110673	Washer, 1/4" Flat Standard
5	2	112095	Clevis Pin, Std Zp 1/4 X 1 5/8
6	1	235028	Actuator, 5.9", With Plug
7	1	270135	Tool Box Door Hinge, Outer Half
8	1	270139	Tool Box Door Hinge, Inner Half

DOOR OPERATION METHODS

Parts List			
ITEM	QTY	PART #	DESCRIPTION
		205134	Kit, Beefcake Ball Joint
8	2	110083	Nut, 3/8-24
9	1	110289	Bolt, 3/8 X 0.5 Shoulder Shcs
10	1	110676	Washer, 3/8" Flat Standard
11	1	111068	Bolt, 3/8-24 X 7.0
12	1	142015	Ball Joint Linkage, 3/8-24 Rh

METHOD ONE
205134

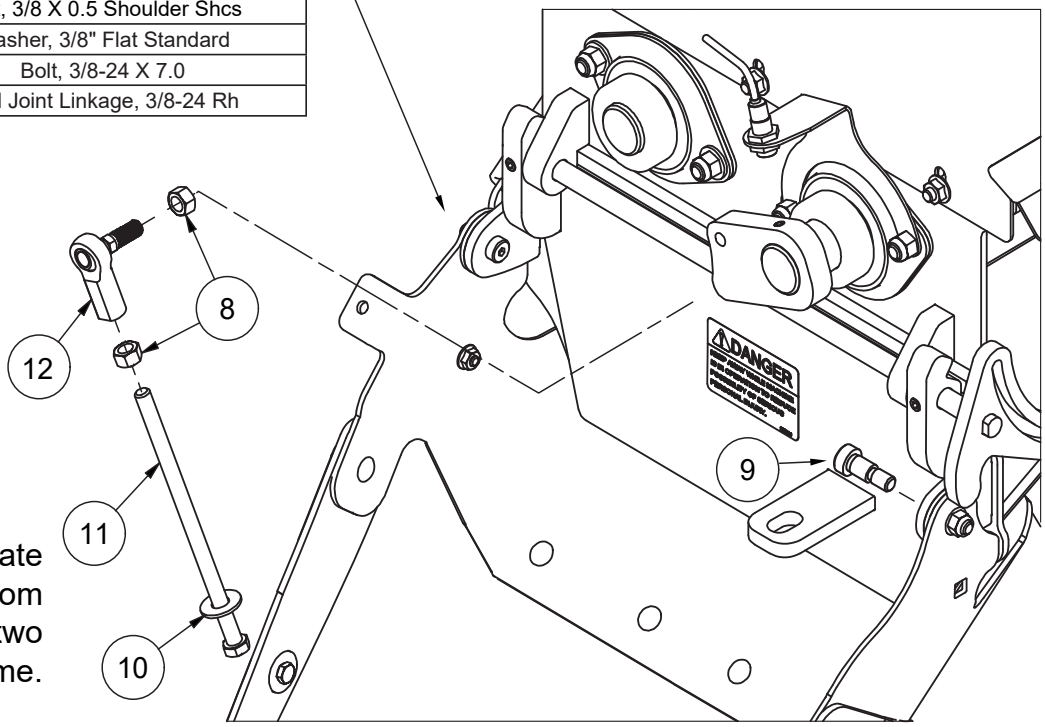

***Note: Do not operate feeder with parts from both method one and two installed at the same time. Failure will result.

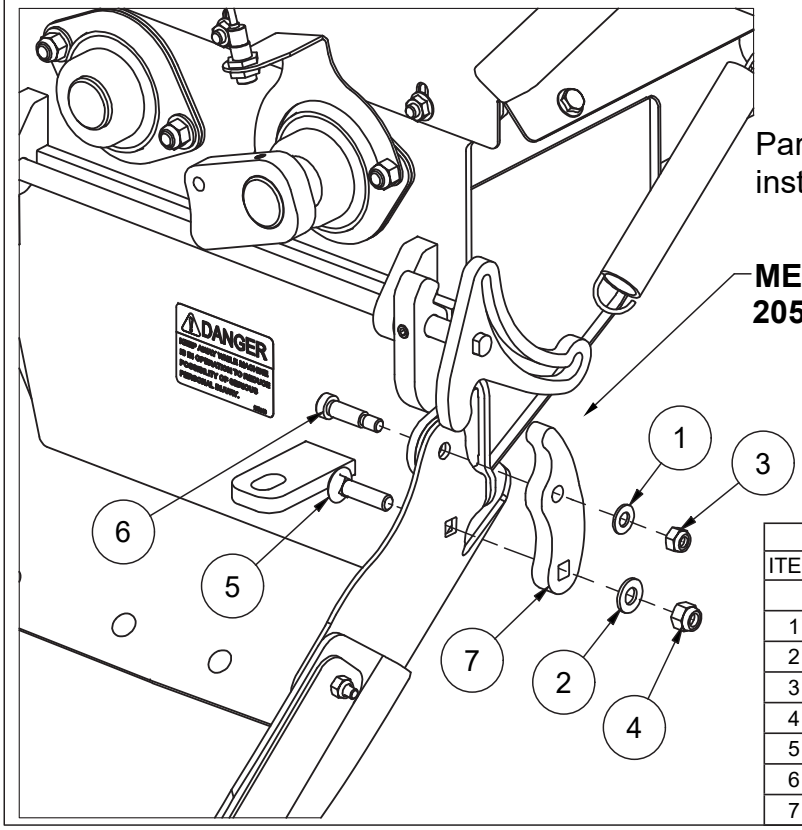

Parts for method two are installed from the factory.

METHOD TWO
205151

Parts List			
ITEM	QTY	PART #	DESCRIPTION
		205151	Kit, Beefcake Manual Door Kicker
1	1	110069	Washer, 5/16" Flat Sae
2	1	110155	Washer, 3/8" Flat Sae
3	1	110603	Nut, 5/16-18 Lock (Nylon)
4	1	110618	Nut, 3/8-16 Lock Nylon Insert
5	1	110916	Bolt, 3/8-16 X 1.5 In Carriage
6	1	111071	Bolt, 3/8 X 1.0 Shoulder Shcs
7	1	260757	Manual Door Kicker

LIGHT BAR KIT 800/900

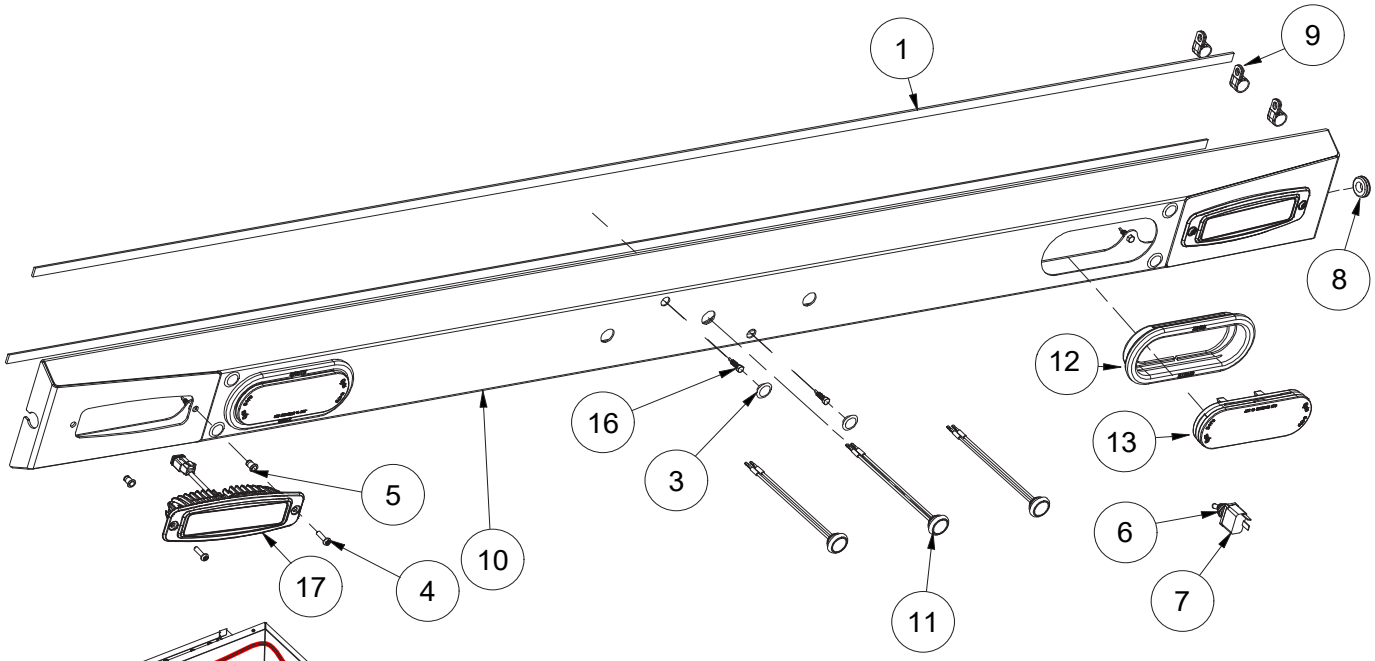

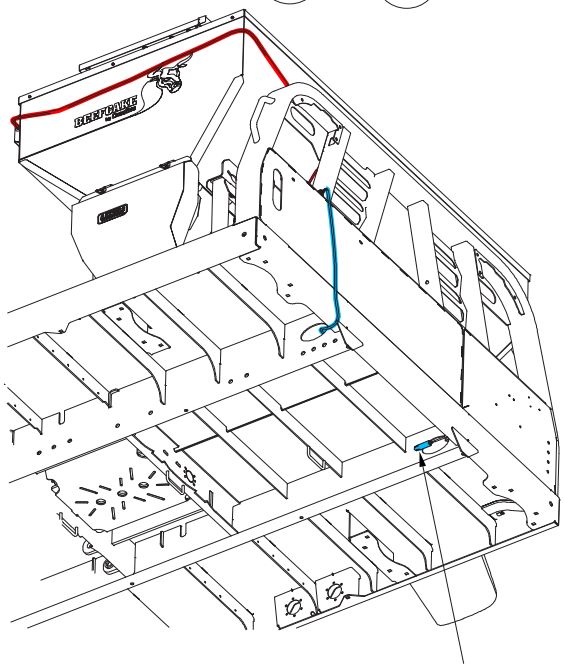

232246 connects between the front-back and headache rack harness. Blunt cut wire is for the work lights.

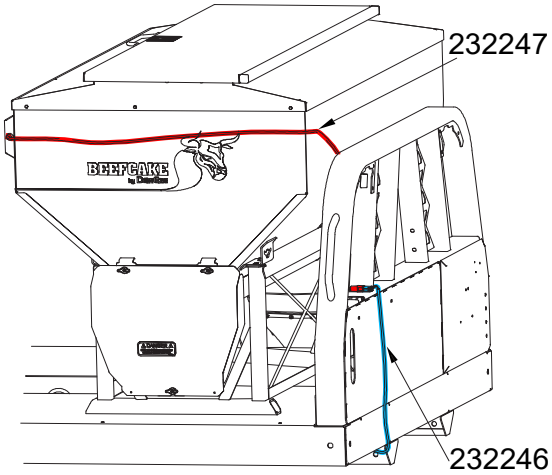

Parts List LIGHTBAR KIT: **205498**			
ITEM	QTY	PART #	DESCRIPTION
1	13ft	100613	Seal, .50 X .187 X 156
2	5	102117	Cable Tie, Edge Clip, Top Mount, 7.9" Black
3	6	110753	Plug, 1/2" Button Plastic
4	4	110834	Screw, 10-24 X 3/4 SS Phillips Pan Head
5	4	110835	Nut, 10-24 Rivet Aluminum
6	1	132035	Switch Boot
7	1	132135	Switch, Toggle, Spst, On-Off
8	1	150018	Grommet, 9/16 X 1" Od
9	3	200019	Clamp, Adel Ac10 .265 Hole
10	1	215399	Weldment, Light Bar, Cake Feeder
11	3	232091	Light, 3/4" Round, Led, Red
12	2	232125	Grommet, 6" Oval, Grote
13	2	232127	Light, Oval, S/T/T, Male Pin, Grote
14	1	232246	Harness, Light Bar Splice, 800/900
15	1	232247	Harness, Light Bar, 800/900
16	6	710587	Screw, 3/16 X .75 Tek Self-Tap
17	2	835027	Headlight Assembly, Flush Mount Led

LIGHT BAR KIT NON-800/900

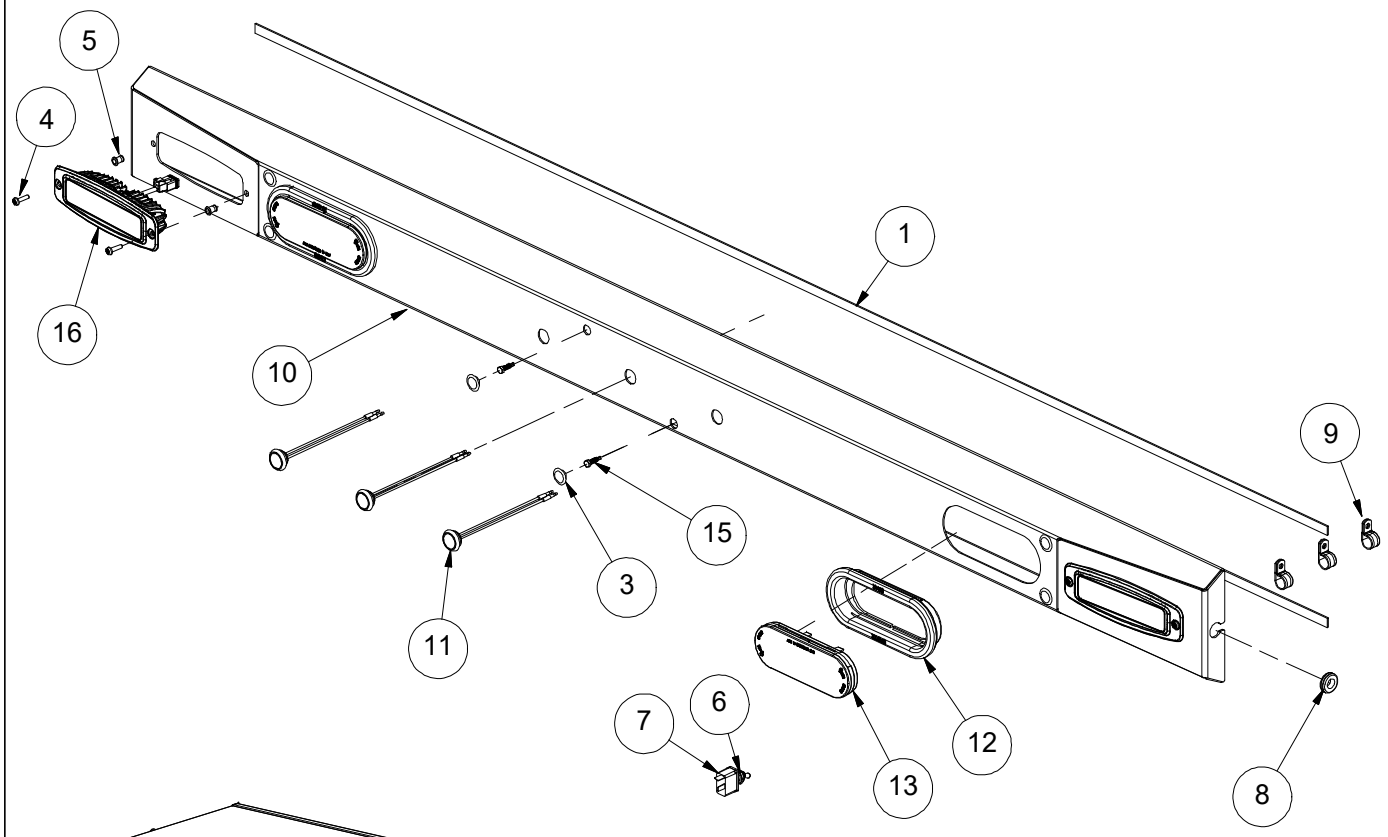

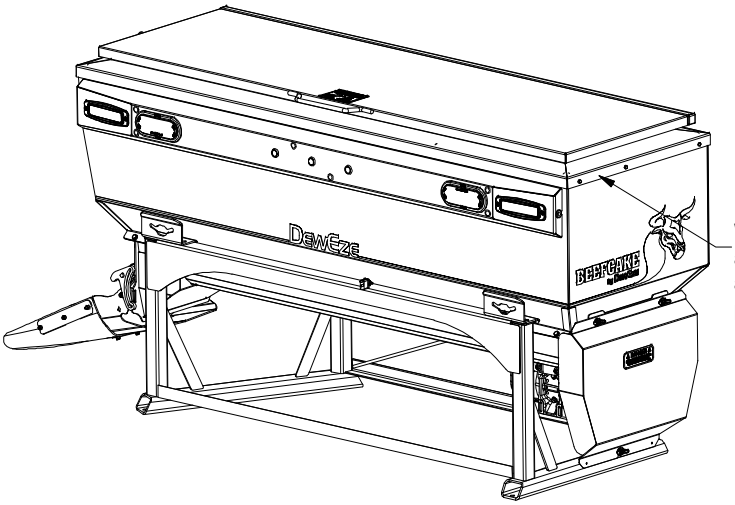

Wiring harness will run along right side then across headache rack and plug into place of tail lights.

If you are putting in on an older bed you will need to order the Adapter Harness Kit: 235033.

The Light Bar Harness: 232142 plugs directly into the Grote harness on your DEWEZE flatbed after June 2018.

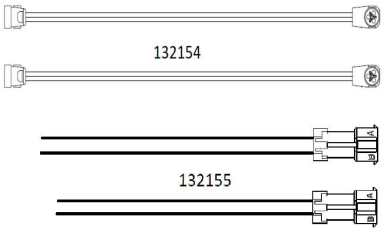

Adapter Kit # 235033

			Parts List LIGHTBAR KIT: **205142**
ITEM	QTY	PART #	DESCRIPTION
1	13ft.	100613	Seal, .50 X .187 X 156
2	5	102117	Cable Tie, Edge Clip, Top Mount, 7.9" Black
3	6	110753	Plug, 1/2" Button Plastic
4	4	110834	Screw, 10-24 X 3/4 Stainless Phillips Pan Head
5	4	110835	Nut, 10-24 Rivet Aluminum
6	1	132035	Switch Boot
7	1	132135	Switch, Toggle, Spst, On-Off
8	1	150018	Grommet, 9/16 X 1" Od
9	3	200019	Clamp, Adel Ac10 .265 Hole
10	1	215399	Weldment, Light Bar, Cake Feeder
11	3	232091	Light, 3/4" Round, Led, Red
12	2	232125	Grommet, 6" Oval, Grote
13	2	232127	Light, Oval, S/T/T, Male Pin, Grote
14	1	232142	Harness, Cake Feeder Light Bar
15	6	710587	Screw, 3/16 X .75 Tek Self-Tap
16	2	835027	Headlight Assembly, Flush Mount Led

NOTES

Harper Industries, Inc.
151 E. Highway 160
Harper, KS 67058

Telephone: 620-896-7381
Toll-Free: 800-835-1042
Fax: 620-896-7129

Website: www.harperindustries.com

E-mail: info@harperindustries.com