600/700 SERIES

PARALLEL SQUEEZE

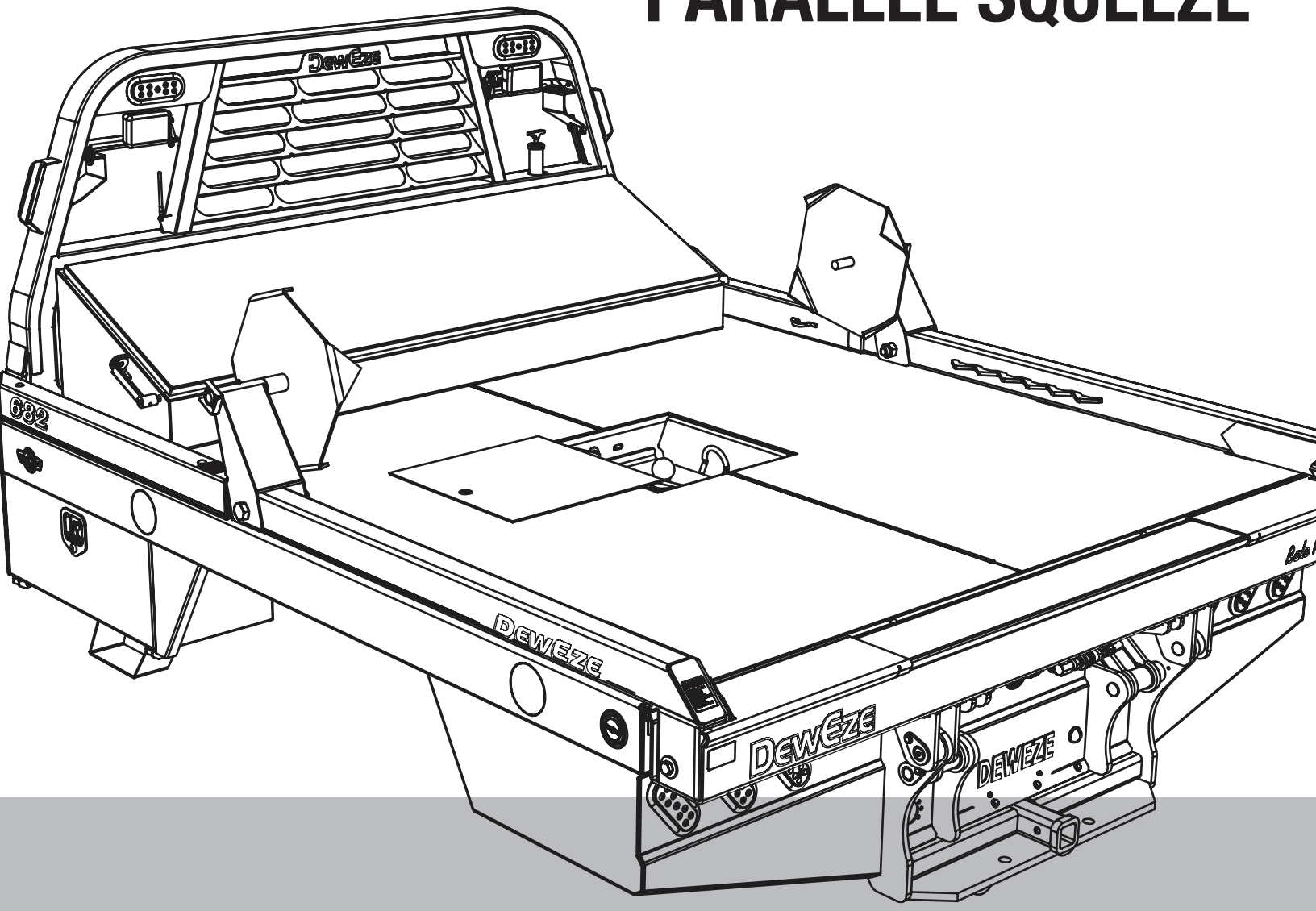

DewEze®

3-2025

HARPER INDUSTRIES INC

Thank you for purchasing a DewEze Flatbed.

TO THE OWNER OR OPERATOR:

As with all Harper products, the 600 and 700 Series Flatbeds have been thoroughly tested and built to provide a sturdy, dependable product. The Flatbed is equipped with live hydraulics, which allows it to be used for a wide range of lifting and hauling tasks. This manual is written as an aid to operating and maintaining the DewEze Flatbed. Read and understand the manual thoroughly before operation to avoid damage to the unit or injury to the operator or bystanders.

A Flatbed can present hazards to an operator who follows unsafe procedures in either the operation or maintenance of the unit. Therefore, **SAFETY WARNINGS** are present at certain locations in the text. Harper Industries is not responsible for accidents or injuries that result from the misuse or lack of maintenance of the Flatbed.

SYMBOL: ⚠ **SAFETY WARNING!** ⚠

MEANING: Failure to understand and obey this warning may result in injury to you or others. Whenever this symbol is used, please pay very close attention to the information presented, and make sure you fully understand. If you do not, contact your dealer or Harper Industries for clarification.

HARPER INDUSTRIES, INC.

151 E. HWY. 160 Harper, KS 67058
(620) 896-7381 • **Fax** (620) 896-7129
Toll Free 800-835-1042
Email info@deweze.com
Website www.deweze.com

© 2025 Harper Industries, Inc.
The Harper and DewEze names and the ATM logo are registered trademarks of Harper Industries, Inc. All other brand and product names are trademarks or registered trademarks of their respective companies.

Statement of Warranty

Harper Industries, Inc. (HII) warrants to each purchaser of a new DewEze Flatbed from an authorized dealer or representative, that such equipment is free of manufacturer's defects in workmanship and materials which appear while in normal service for a period of TWO YEARS commencing with delivery to the original user. The Flatbed hydraulic and electrical systems are warranted for a period of ONE YEAR.

The obligation of HII under this warranty is expressly limited, at our option, to replacement or repair at a service facility designated by Harper Industries or at the manufacturing plant in Harper, KS. A part will be replaced after inspection discloses it to have been defective. This warranty does not apply to defects caused by damage or unreasonable use (including failure to provide reasonable and necessary maintenance, or by performing functions without genuine DewEze Flatbed accessories) while in the possession of the consumer.

Warranty is limited to parts, labor and ground freight delivery of replacement parts. Labor for repair to hydraulic and electrical power systems from HII installed with bed purchase/installation is covered under this warranty. HII shall not be liable for the consequential damages of any kind, including but not limited to consequential labor costs or transportation charges in connection with replacement or repair of defective parts.

This warranty does not apply to parts subjected to misuse, abuse, alteration, improper or inadequate maintenance, or normal wear.

Harper Industries makes no warranty with respect to trade accessories. They are subject to the warranties of their respective manufacturers.

ANY IMPLIED OR STATUTORY WARRANTIES, INCLUDING ANY WARRANTY OR MERCHANTABILITY OR FITNESS FOR A PARTICULAR PURPOSE, ARE EXPRESSLY LIMITED TO THE DURATION OF THIS WRITTEN WARRANTY. HII makes no other express warranty, nor is anyone authorized to make any on behalf of HII.

For further information please contact your nearest DewEze Flatbed dealer.

RECORDS

Date of Purchase _____ / _____ / _____

Dealer's Name _____

Dealer's Phone _____

Serial Number Bed____ _____

Serial Number Pump_ _____

Table of Contents

OPERATOR SECTION

To the Owner or Operator..... 1
Warranty Statement..... 2
Table of Contents..... 3
Specifications..... 4
Feature Identification..... 5
Safety Guidelines
- General Equipment Safety..... 6
- Flatbed Operation Safety..... 6
- Hydraulic Safety..... 7

Operating Instructions
- Beginning Operation..... 7
- Loading..... 7
- Extending (option)..... 7
- Unloading..... 7
- Unrolling..... 8
- Storing the arms..... 8
- Turning System Off..... 8

Maintenance
- Check Daily or Before Use..... 8
- Lubrication..... 8
- Hydraulic Oil..... 9
- Hydraulic System..... 9
- GatorHyde Protective Coating..... 9
- Remote Control..... 9
- Power Unit..... 9
- Troubleshooting..... 10

PARTS SECTION

Standard Parts
- Dual Lift Standard Parts..... 14-17
- 600/700 Common Parts..... 18-19
- Parallel Squeeze Crosstube/Arms..... 20
- Squeeze Cylinder Chart..... 21

Hydraulics
- Dual Lift Hydraulic Assembly..... 22-23
- Dual Lift Common Hydraulics-Gen 3..... 24-25
- Dual Lift Hydraulics Valve and Filter..... 26
- Valve and Filter-Gen 3 Double Poppet..... 27
- Valve Service Parts-Gen 2..... 28
- Gen 3 -08 Hydac Deutch 2014..... 29
- Gen 3 -08 Eaton Deutch 2015..... 30
- Gen 3 -08 Hydac Deutch 2016..... 31
- Hydraulic Assembly Reservoir..... 32
- Hydraulic Schematic Non-Proportional..... 33

XRM
- Dual Lift XRM Parts..... 35
- XRM Hydraulics..... 36
- XRM Hydraulics Update 2012..... 37
- XRM Hose Chart & Routing..... 38
- XRM Cylinder Assembly..... 39

Controls and Lights
- RF Control and Manual Switches..... 40
- Clutch Control Switch..... 41
- Hand Control Option..... 42-43
- Lights & Harness 12A01 thru Jun 2018..... 44
- Lights & Harness after Jun 2018..... 45

Decals
- Decals-Safety/Operation..... 46
- 600/700 Series Decals..... 47

Accessories
- Swingout Lights..... 48
- Cargo Lights..... 49
- LED Swingout Lights..... 50
- LED Cargo Lights..... 51
- Harness Adapters..... 52
- Rear View Camera Option..... 53
- Bed Mounting Kits..... 54
- 30” Toolbox & Fender Skirts..... 55
- 20” Toolbox..... 56
- 17” Toolbox..... 57
- 12” Toolbox..... 58
- 770 Toolbox..... 59
- Across the Bed Toolbox..... 60
- Spinners and Risers..... 61
- Other..... 62
- Front Skirt Toolbox Replacement..... 63

Appendices
- I
  - GatorHyde Repair..... 64
- II
  - Remote Control..... 65-66
  - 2-Bank Wiring - Kar-Tech Remote... 67-70
  - 3rd Bank Wiring - Kar-Tech Remote 71-72
  - 2-Bank - Gen 2 w/ Remote..... 73-74
  - 3-Bank - Gen 3 w/ Remote..... 75-76
- III
  - Standard E/H..... 77-84
- IV
  - HD E/H..... 85-95
- V
  - XRM Adapter Update..... 96

Specifications

DewEze flatbeds are specifically designed to transport and feed round hay bales.

Model Specifications

MODEL	670	671	675	676	677	679	682	684
WIDTH	7’ 1”	7’ 1”	7’ 1”	7’ 1”	7’ 1”	7’ 1”	7’ 9”	7’ 9”
LENGTH	7’ 2”	7’ 7”	8’ 6”	8’ 11”	9’ 4”	9’ 8”	9’ 4”	9’ 8”
WEIGHT	2020#		2070#	2120#	2170#	2220#	2270#	2420#

687	688
7’ 9”	7’ 9”
11’ 6”	11’ 10”
2540#	2670#

MODEL	770	778	776	782	784	787	788
WIDTH	8’	8’	8’	8’	8’	8’	8’
LENGTH	7’ 2”	8’ 6”	8’ 11”	9’ 4”	9’ 8”	11’ 6”	11’ 10”
WEIGHT	2070#	2120#	2195#	2270#	2420#	2540#	2670#

*** Length of all flatbeds includes 6” for crosstube.**

**** Add 250 lbs. for extendable arm option.**

Hydraulic System Specifications

HYDRAULIC	Powered by engine driven pump or self contained battery-powered electric/hydraulic unit
SYSTEM PRESSURE	2450 psi
OIL RESERVOIR CAPACITY	10 gallons
OIL FILTER	Deweze 720043, WIX 51551 (10 micron)
CYLINDER, LIFT (2)	3.50” x 16.62”
CYLINDER, SQUEEZE	2.00” x 34.00” (670, 675, 676, 677, & 679) 2.00” x 35.75” (682, 684, 687, & 688) 2.00” x 39.25” (770, 776, 778, 782, 784, 787, & 788)
CYLINDER, EXTENDIBLE*	2.00” x 20.0” (left side)
CYLINDER, EXTENDIBLE*	2.50” x 20.0” (left side)

*** Cylinders used for extendible arms are optional.**

Protective Coating

PAINT	Heat-treated, polyurethane based paint
GATORHYDE	Long-lasting, textured polyurea surface

Feature Identification

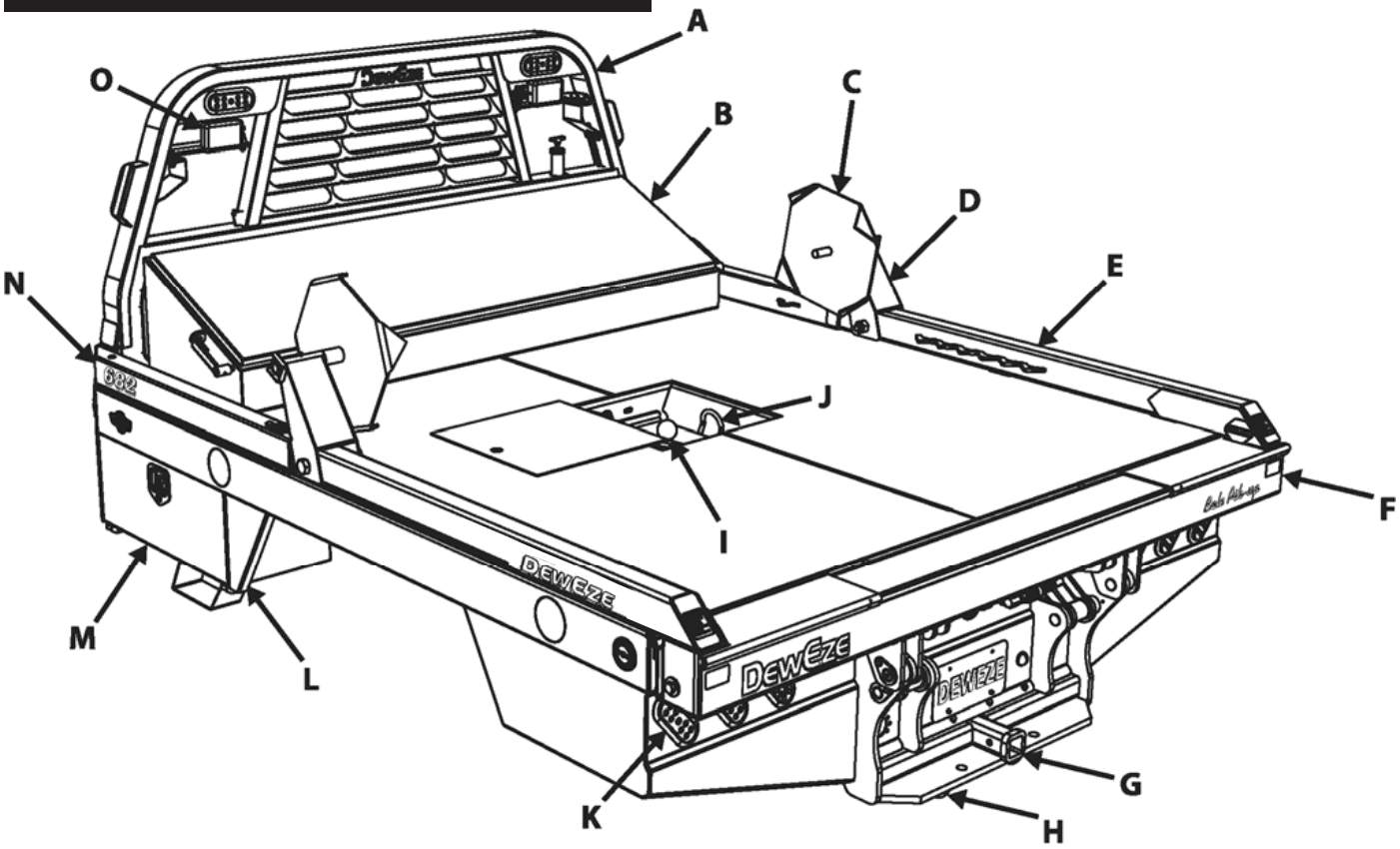

A. Headache Rack – protects the rear pickup window. The hydraulic oil tank and valve are located in the headache rack.

B. Across-the-bed Toolbox (optional) – measures 78” wide, 15.5” tall and 21.5” deep and has a shelf mounted inside.

C & D. Spinners & Risers (optional) – used to unroll hay. The risers allow the hugger arms to lie flat on the bed with the spinners attached.

E. Hugger Arms – squeeze together to grip the bale and lift it onto the flatbed. When the arms are stored they serve as side rails for the flatbed.

F. Crosstube – houses the squeeze cylinder and guides the hugger arms.

G. Hitch Plate – allows for a 2” square receiver hitch and has holes for hitch pins.

H. Safety Chain Loops – always use safety chains when towing.

I. Gooseneck Hitch – located under a cover plate in the middle of the bed.

J. Safety Chain Loops – always use safety chains when towing.

K. Lights – LED lighting for stop-tail-turn has long life and low current draw.

L & M. Skirts & Toolboxes (optional) – mount under front of bed on both sides. The Electric/Hydraulic Power unit mounts inside the left toolbox.

N. Dummy Arms – serve as side rail along with hugger arms.

O. Swing Lights (optional) – lights can be pivoted out wider than the bale when working at night.

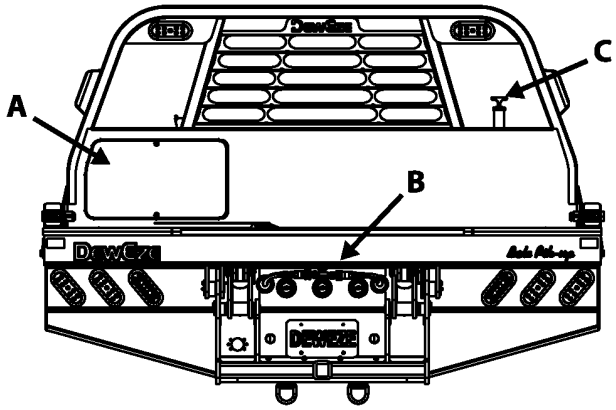

A. Valve Compartment – houses the hydraulic control valve, hydraulic oil filter and the radio frequency receiver.

B. Pioneer Couplers – connect hydraulic hoses to the squeeze cylinder – may also be used to connect to implements.

C. Hydraulic Oil Fill & Dipstick – check hydraulic oil level with dipstick – fill here when necessary.

Remote Control Transmitter – operates all functions of the flatbed – uses two AA batteries.

SAFETY WARNING!

Do not stand under the hugger arms when operating the bale pickup unit, even when arms are empty.

Specifications

Operator safety is of upmost concern when designing and developing a new piece of equipment. Designers and manufacturers build in as many safety features as possible. However, every year many accidents occur which could have been avoided by a few seconds of thought and a more careful approach to handling equipment. Most accidents can be avoided by observing the precautions in this section. To avoid personal injury, study the safety warnings and cautions listed in this manual and follow them.

General Equipment Safety

- This equipment can be dangerous to children and persons unfamiliar with its operation. The operator should be a responsible adult familiar with farm machinery and trained for this unit.
- Do not attempt to operate equipment under the influence of drugs or alcohol.
- Do not allow persons to operate or assemble this unit until they have read this manual and have developed a thorough understanding of the safety precautions and how the unit works.
- Review the safety warnings and cautions with all users annually.

If you have any questions not answered in this manual or require additional copies, contact your dealer or Harper Industries.

Flatbed Operation Safety

- Replace any CAUTION, WARNING, DANGER or instruction decal that is not readable or is missing.
- Make sure all safety pins are in place and flatbed mounting bolts are secure to the truck frame.
- Make sure hinges, joints, and sliding parts are well greased, especially during off season to prevent rusting and binding.

- Check with truck dealer for any load limits, additional suspension or tire requirements. The flatbed's lifting capability may exceed the truck's load capacity in some instances.

Hydraulic Safety

- Do not operate the hydraulic system with the hood open.
- Do not activate the electric clutch unless the truck engine is at idle. Operating the clutch at road speeds can damage the hydraulic system.

SAFETY WARNING!

Hydraulic system operates under high pressure and escaping fluid can penetrate the skin.

Operating Instructions

Beginning Operation

- Turn the pump switch on the dash to the "ON" position. (Red light will indicate that pump is on).

CAUTION: In cold weather, let engine idle for 5-10 minutes with pump on before operating arms to warm oil. Neglecting to do so may cause hydraulic pump failure.

- Press and hold the power button on the transmitter until both LEDs turn on, then release.
- The green LED will flash rapidly when the communication has been established. If the receiver is off, the red LED will flash slowly.
- Press the corresponding buttons on the transmitter keypad to turn on and off each of the outputs.

Loading

- Back truck against bale with the arms wide apart and tilted slightly upward.
- Squeeze arms firmly against the bale.
- Lift the bale onto the truck.
- Release the bale and repeat the operation for the second bale.

CAUTION: When hauling one bale, make sure it is held tightly and rests on the bed. When hauling two bales make sure the second bale is as far forward as possible (Fig. 1). Carrying a bale behind the bed, as show in Fig 2, places excessive stress on the cylinder, linkage, and pins.

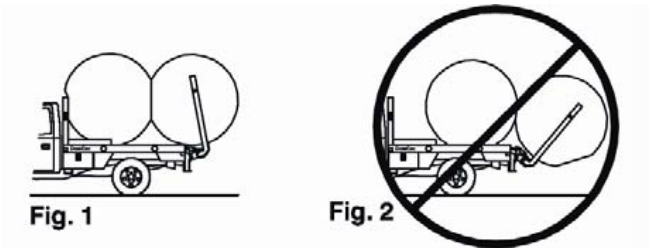

CAUTION: Do not exceed GVRW rating of truck when loading.

Extending (option)

- Always squeeze the bale with the arms in the retracted position.
- Extend the arms and release the bale.
- Fully retract the arms before laying them on the bed.

CAUTION: Squeezing the bale when the arms are extended puts excessive force on the arms and cross-tube and may result in bending the unit.

Unloading

- To unload, do the reverse of the loading operation.
- Spinners may sometimes be needed to grip the front bale for unloading.

Unrolling (option)

- Use risers and spinners to unroll a bale.
- Position the arms over the bale so the spinners are at the center of the bale.
- To unroll, lower the bale to the ground.
- Turn the pump off and push the FLOAT switch on the remote control.
- Slowly drive STRAIGHT forward. The bale will gradually unroll.

CAUTION: Turning while unrolling a bale may cause hugger arms to bend.

CAUTION: Failure to use FLOAT while unrolling may damage flatbed frame or lift cylinder. The FLOAT switch on the remote transmitter stays on until it is pressed a second time or another switch is activated. To avoid power loss, always deactivate the FLOAT when not in use.

Storing the Arms

- Close the arms partially and lay them on the flatbed.
- Open the arms until they are flush with the side of the bed. They now function with the dummy arms as side rails.

Turning System Off

- Turn the pump off when it is not in use.
- The remote control turns itself off automatically after 10 minutes.

CAUTION: Operating truck at road speeds or above 2,000 RPM with pump engaged may cause hydraulic pump failure.

Maintenance

Check Daily or Before Use

- Check the hydraulic oil level. Keep the level to “FULL” on the dipstick.
- Check the belt, belt tensioner and idler pulleys on engine clutch pump system.
- Examine the hydraulic hoses for leaks with an object such as cardboard.

SAFETY WARNING!

Hydraulic fluid escaping under pressure can penetrate the skin and may cause death if not treated immediately.

Lubrication

Grease the locations indicated in the illustrations below once per week while the unit is in use and at the end of each season (same locations on right and left).

1. Lift cylinder – rod end
2. Cross-tube hinge
3. Idler arm base
4. Idler link pin

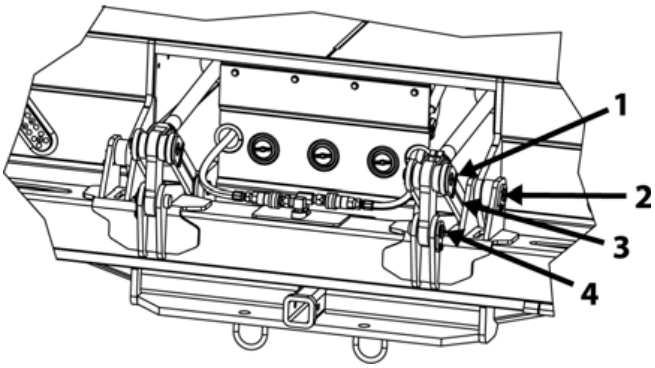

SAFETY WARNING!

Use extreme caution when greasing the flatbed. Completely lower arms to expose rear zerks and turn off ignition.

5. Riser (option)
6. Lift cylinder – base end

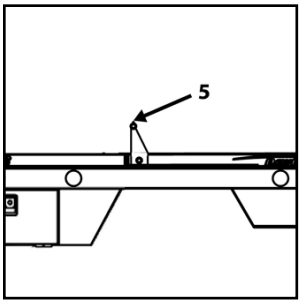

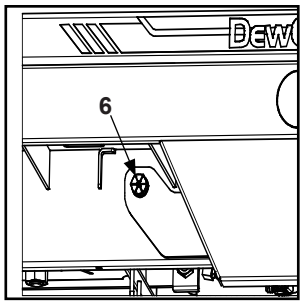

Hydraulic Oil

- Hydraulic fluid selection will affect the performance of the hydraulic system.

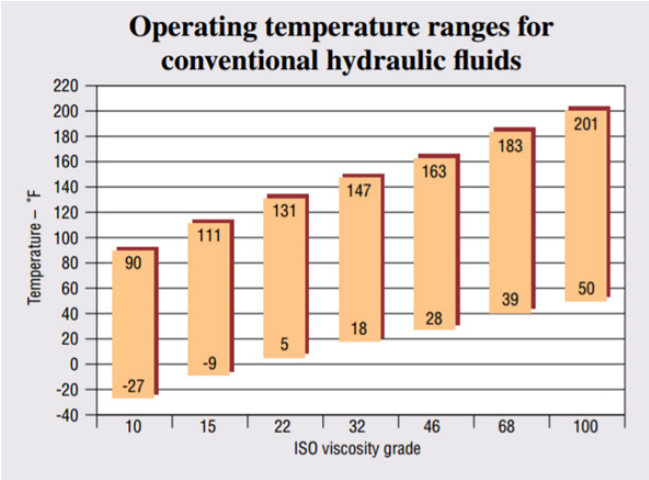

- Consult your local oil supplier for help in selection of a hydraulic fluid appropriate for your area. Consideration will also need to be given as to whether the system is a clutch pump or electric over hydraulic.
- Change the hydraulic oil filter after the first 40 hours of use and then every 250 hours, or annually thereafter.
- Change the hydraulic oil if it becomes contaminated or turns milky in appearance.
- If other hydraulic equipment is connected to the system, the oil will intermix and cold weather viscosity may be lost.

Hydraulic System

- If the quick-couplers leak, the o-rings may need to be replaced.
- High heat, 190° or greater, can be damaging to the hydraulic system. Feel various parts of the system to make sure there are no “hot spots” which may indicate a problem.
- In the off season, run the bed at least twice a month to prevent valve condensation.
- For easy hookup of the couplers, turn the pump switch off and activate the control valve switches with the ignition on. This will release pressure in the lines.

GatorHyde Protective Coating

- In the event that damage should occur to the GatorHyde protective coating, repair materials are available from your DewEze dealer to fix small areas. Follow the instructions provided in Appendix I.

Remote Control

- The remote control transmitter has two LED indicators, the green TRANSMIT indicator and the red BATTERY / DIAGNOSTIC indicator.
- The green TRANSMIT indicator flashes rapidly whenever there is communication between the transmitter and the receiver.
- The red BATTERY / DIAGNOSTIC indicator starts blinking once every second when the battery voltage is low and requires replacement. It also blinks when there is a problem with the system in the form of an error code. Refer to the ERROR CODE CHART in Appendix II.
- To synchronize a new transmitter and receiver together, refer to the TEACH ID CODE instructions in Appendix II.

Power Unit

- If the flatbed is powered with a DewEze Under-the-Hood hydraulic system, refer to the following chart when troubleshooting.
- See Appendix III if the flatbed is powered with the Electric/Hydraulic power unit.

Troubleshooting

Problem	Symptom	Possible Solutions
Hydraulic Pump	No Oil Flow	• CHECK OIL LEVEL IN RESERVOIR. If oil level is low, check for leaks in system then re-fill to FULL. • CHECK BELT TENSION. Replace tensioner or tighten idlers if needed. Replace belt if worn. • CHECK FOR SHEARED KEY ON PUMP SHAFT. Replace key. • CHECK IF SUCTION HOSE COLLAPSES IN SUCTION. Locate and remove obstruction. • CLUTCH NOT FUNCTIONING. See possible clutch solutions. • INTERNAL PUMP DAMAGE. **Seek assistance from dealer.**
Hydraulic Pump	No Oil Pressure	• HYDRAULIC OIL LEAKS IN SYSTEM. Take safety precautions and check for leaks. Tighten fittings and replace damaged hoses. • CHECK FOR MALFUNCTIONING SWITCH. Replace switches. • BELT OR CLUTCH MAY BE SLIPPING. Replace tensioner or tighten idlers if needed. Replace belt if worn. • VALVE NOT FUNCTIONING. Check for disconnected wires at solenoid or rusted ground wires. **Seek assistance from dealer if valve continues to be unresponsive.** • PRESSURE RELIEF MAY BE SET TOO LOW OR BROKEN. **Seek assistance from dealer. CAUTION: PRESSURE EXCEEDING 2,750 PSI CAN DAMAGE THE PUMP.** • PUMP IS WORN OR DAMAGED. **Seek assistance from dealer.**
Clutch	Does Not Engage	• CHECK FOR BLOWN FUSE. Replace fuse. **CAUTION: FUSE SHOULD NOT EXCEED 30 AMPS** • CHECK WIRE TO CLUTCH. Insure there are no breaks or shorts. • CHECK FOR BAD SWITCHES IN SYSTEM. Replace switches. • CLUTCH IS WORN OUT. **Seek assistance from dealer.**
Belt(s)	Jumps Off Pulley	• BELT(S) TOO LOOSE. Replace tensioner or tighten idler pulleys. • CHECK FOR EXCESSIVE BELT WEAR. Replace worn belt(s). • CHECK FOR LOOSE PUMP BRACKET. Tighten loose bolts. Replace broken bolts. • CHECK CRANKSHAFT PULLEY FOR LOOSE OR BROKEN BOLTS. Tighten loose bolts. Replace broken bolts. • CHECK ALIGNMENT OF IDLER PULLEYS AND CONDITION OF BEARINGS. Re-align idler pulleys or replace worn idler pulleys. • CHECK ALIGNMENT OF CLUTCH AND CRANKSHAFT PULLEY. **If misalignment is visible, seek assistance from dealer.**

SAFETY WARNING!

Use extreme caution when inspecting an engine. Serious injury or death could result from getting too close! Remove key from ignition when servicing.

DewEze®

600/700 SERIES

PARTS

Table of Contents

PARTS SECTION

Standard Parts
- Dual Lift Standard Parts..... 14-17
- 600/700 Common Parts..... 18-19
- Parallel Squeeze Crosstube/Arms..... 20
- Squeeze Cylinder Chart..... 21

Hydraulics
- Dual Lift Hydraulic Assembly..... 22-23
- Dual Lift Common Hydraulics-Gen 3..... 24-25
- Dual Lift Hydraulics Valve and Filter..... 26
- Valve and Filter-Gen 3 Double Poppet..... 27
- Valve Service Parts-Gen 2..... 28
- Gen 3 -08 Hydac Deutch 2014..... 29
- Gen 3 -08 Eaton Deutch 2015..... 30
- Gen 3 -08 Hydac Deutch 2016..... 31
- Hydraulic Assembly Reservoir..... 32
- Hydraulic Schematic Non-Proportional..... 33

XRM
- Dual Lift XRM Parts..... 35
- XRM Hydraulics..... 36
- XRM Hydraulics Update 2012..... 37
- XRM Hose Chart & Routing..... 38
- XRM Cylinder Assembly..... 39

Controls and Lights
- RF Control and Manual Switches..... 40
- Clutch Control Switch..... 41
- Hand Control Option..... 42-43
- Lights & Harness 12A01 thru Jun 2018..... 44
- Lights & Harness after Jun 2018..... 45

Decals
- Decals-Safety/Operation..... 46
- 600/700 Series Decals..... 47

Accessories
- Swingout Lights..... 48
- Cargo Lights..... 49
- LED Swingout Lights..... 50
- LED Cargo Lights..... 51
- Rear View Camera Option..... 52
- 30” Toolbox & Fender Skirts..... 53
- 20” Toolbox..... 54
- 17” Toolbox..... 55
- 12” Toolbox..... 56
- 770 Toolbox..... 57
- Across the Bed Toolbox..... 58
- Spinners and Risers..... 59
- Other..... 60
- Front Skirt Toolbox Replacement..... 61

Appendices

I
- GatorHyde Repair..... 62

II
- Remote Control..... 63-64
- 2-Bank Wiring - Kar-Tech Remote... 65-68
- 3rd Bank Wiring - Kar-Tech Remote 69-70
- 2-Bank - Gen 2 w/ Remote..... 71-72
- 3-Bank - Gen 3 w/ Remote..... 73-74

III
- Standard E/H..... 75-87

IV
- HD E/H..... 88-98

V
- XRM Adapter Update..... 99

DUMMY ARMS & CROSSTUBE

CROSSTUBES		
BED WIDTH	BED #'s	PART #
85.375	670, 675, 677, & 679	215149
93.0	682, 684, 687 & 688	215162
96.5	770, 778, 782, 784, 787, & 788	215138

BED MODELS	STANDARD	BEEFCAKE 1000		BEEFCAKE 1500		BEEFCAKE 2000	
	Drv & Pass	Drv Front	Drv Rear	Drv Front	Drv Rear	Drv Front	Drv Rear
670	215189	NA	NA	NA	NA	NA	NA
671	215384	NA	NA	NA	NA	NA	NA
675	215150	215353	215354	NA	NA	NA	NA
676	215249	215353	215356	215355	215354	NA	NA
677	215191	215353	215357	215355	215356	NA	NA
679	215208	215353	215358	215355	215357	215355	215356
682	215145	215359	215357	215360	215356	NA	NA
684	215193	215359	215358	215360	215357	215360	215356
687	215198	NA	NA	215360	215361	215360	215361
688	215200	NA	NA	215360	215362	215360	215362
770	215210	NA	NA	NA	NA	NA	NA
778	215160	215363	215364	NA	NA	NA	NA
776	215257	215363	215365	215367	215366	NA	NA
782	215158	215363	215368	215367	215369	NA	NA
784	215202	215363	215370	215367	215371	215367	215372
787	215204	NA	NA	215367	215373	215367	215373
788	215206	NA	NA	215367	215374	215367	215374

Dual Lift Standard Parts

Parts List			
ITEM	QTY	PART #	DESCRIPTION
1	2	110244	BOLT, 1/2-13 X 1.5 SHCS
2	8	110319	NUT, 5/16-18 U-TYPE .75L
3	4	110336	WASHER, 1-1/4" FLAT MACHINE
4	2	110365	BOLT, 5/8-18 X 1.5 GR 5
5	2	110437	BOLT, 3/8-16 X 0.75, WIZ FLANGE
6	11	110444	BOLT, 5/16-18 X 0.75, WIZ FLANGE
7	2	110588	NUT, 1/2-13 WIZ FLANGE
8	2	110658	WASHER, 1/2" FLAT STANDARD
9	2	110663	WASHER, 5/8" FLAT SAE
10	4	110672	WASHER, 3/8" LOCK
11	4	110676	WASHER, 3/8" FLAT STANDARD
12	8	110794	BOLT, 5/16-18 X 0.75, GR8 BLK HEX FLANGE
13	4	110826	NUT, 3/8-16 GR 5
14	4	110846	Bolt, 3/8-16 X 5 in Carriage
15	2	200150	ROLL PIN, 1/4 X 2
16	2	202023	BUSHING, 1.5 X 1.25 X 2.0 SPLIT CG/ID
17	1	205043	INSTALL HARDWARE
18	1	210459	HITCH BALL AND NUT
19	2	210935	IDLER ARM, MACHINE DWG.
20	1	211202	VALVE COVER
21	2	211292	SHIELD, CROSSARM
22	1	211481	EDGE TRIM, VALVE COVER
23	2	214002	PUSH ARM ASSY, DUAL LIFT
24	1	215128	BALL WELL DOOR WELDMENT
25	1	215139	CENTER TAILBOARD DOOR WELDMENT
26	2	215140	PIN WELDMENT, 1-1/4 X 3
27	2	215141	PIN WELDMENT, 1-1/4 X 7
28	2	215142	PIN WELDMENT, 1-1/4 X 4
29	2	215148	PIN WELDMENT, CROSSTUBE LINK
30	1	215167	WELDMENT, HUGGER ARM LEFT
31	1	215168	WELDMENT, HUGGER ARM RIGHT
32	8	510174	GREASE ZERK, 1/4-28 ST

2/24/2011

Dual Lift Standard Parts

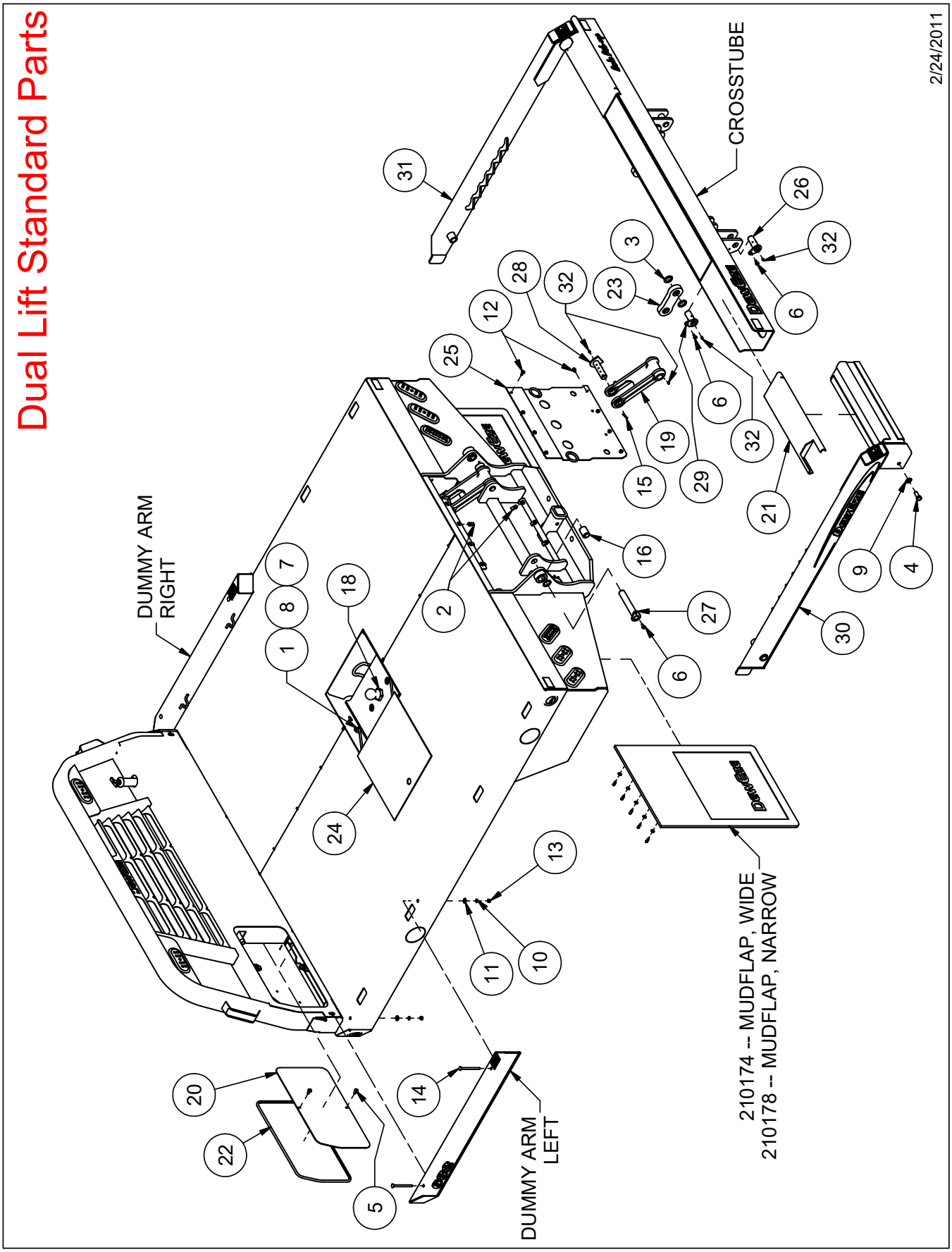

Dual Lift Standard Parts

For S/N's after 12A01

Parts List			
ITEM	QTY	PART #	DESCRIPTION
1	10	110069	WASHER, 5/16" FLAT SAE
2	2	110244	BOLT, 1/2-13 X 1.5 SHCS
3	10	110319	NUT, 5/16-18 U-TYPE .75L
4	4	110336	WASHER, 1-1/4" FLAT MACHINE
5	2	110365	BOLT, 5/8-18 X 1.5 GR 5
6	10	110422	BOLT, 5/16-18 X .75
7	2	110437	BOLT, 3/8-16 X 0.75, WIZ FLANGE
8	11	110444	BOLT, 5/16-18 X 0.75, WIZ FLANGE
9	2	110588	NUT, 1/2-13 WIZ FLANGE
10	2	110658	WASHER, 1/2" FLAT STANDARD
11	2	110663	WASHER, 5/8" FLAT SAE
12	4	110672	WASHER, 3/8" LOCK
13	4	110676	WASHER, 3/8" FLAT STANDARD
14	2	110804	NUT, 3/8-16 U-TYPE .75L
15	4	110826	NUT, 3/8-16 GR 5
16	4	110846	Bolt, 3/8-16 X 5 in Carriage
17	2	200150	ROLL PIN, 1/4 X 2
18	2	202023	BUSHING, 1.5 X 1.25 X 2.0 SPLIT CG/ID
19	1	205043	INSTALL HARDWARE
20	1	210459	HITCH BALL AND NUT
21	2	210935	IDLER ARM, MACHINE DWG.
22	1	211202	VALVE COVER
23	2	211292	SHIELD, CROSSARM
24	1	211481	EDGE TRIM, VALVE COVER
25	2	214002	PUSH ARM ASSY, DUAL LIFT
26	1	215128	BALL WELL DOOR WELDMENT
27	2	215140	PIN WELDMENT, 1-1/4 X 3
28	2	215141	PIN WELDMENT, 1-1/4 X 7
29	2	215142	PIN WELDMENT, 1-1/4 X 4
30	2	215148	PIN WELDMENT, CROSSTUBE LINK
31	1	215167	WELDMENT, HUGGER ARM LEFT
32	1	215168	WELDMENT, HUGGER ARM RIGHT
33	1	215230	CENTER TAILBOARD DOOR WELDMENT, UPPER
34	1	260253	CENTER TAILBOARD, LOWER, ARM BED
35	8	510174	GREASE ZERK, 1/4-28 ST

9/13/2011

Dual Lift Standard Parts

For S/N's after 12A01

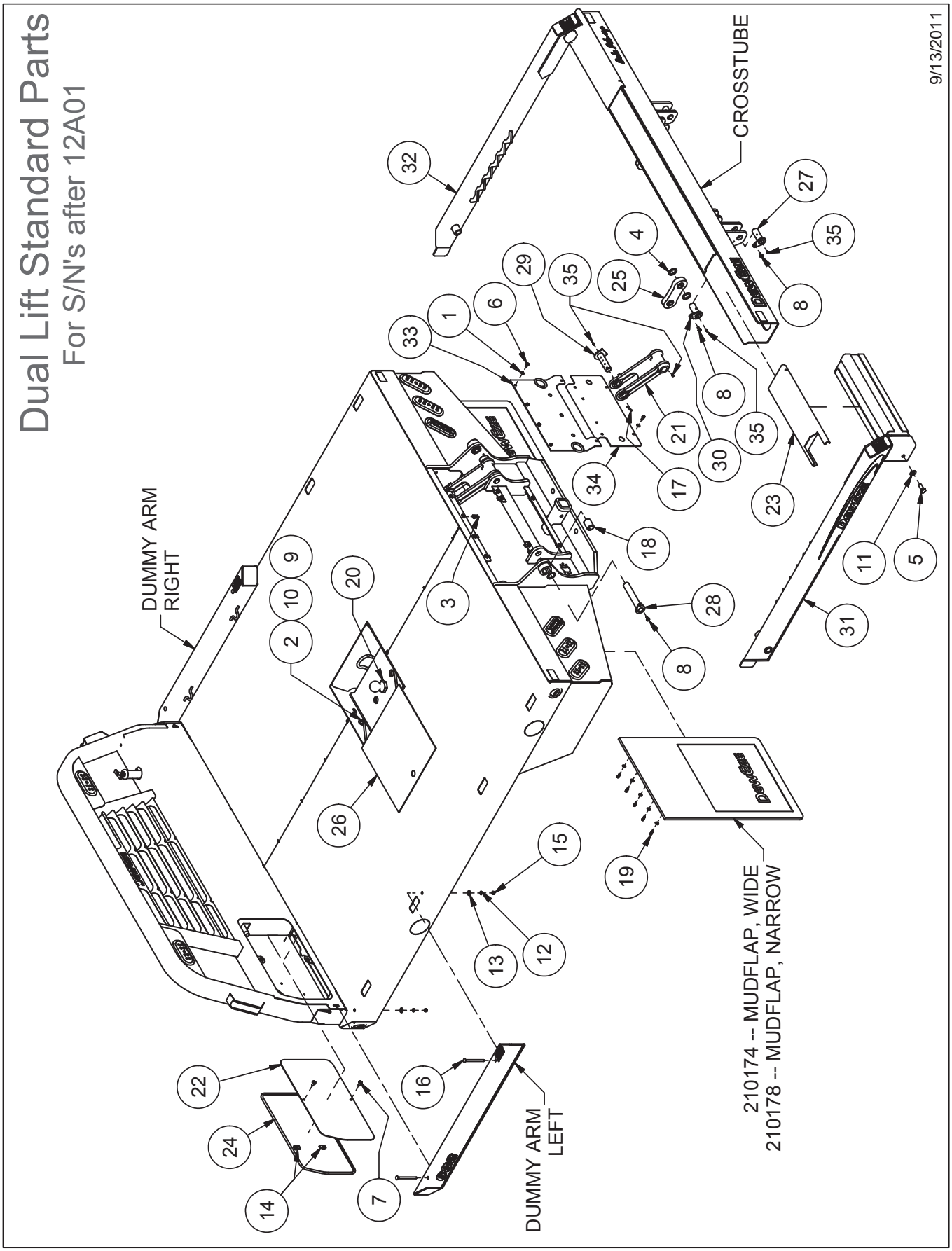

600 & 700 Series Common Parts

Parts List			
ITEM	QTY	PART #	DESCRIPTION
1	2	110440	BOLT, 3/8-16 X 1, WIZ FLANGE
2	4	110672	WASHER, 3/8" LOCK
3	4	110676	WASHER, 3/8" FLAT STANDARD
4	2	110804	NUT, 3/8-16 U-TYPE .75L
5	4	110826	NUT, 3/8-16 GR 5
6	4	110846	Bolt, 3/8-16 X 5 in Carriage
7	10	110069	WASHER, 5/16" FLAT SAE
8	2	110244	BOLT, 1/2-13 X 1.5 SHCS
9	10	110319	NUT, 5/16-18 U-TYPE .75L
10	10	110423	BOLT, 5/16-18 X 1.0
11	2	110588	NUT, 1/2-13 WIZ FLANGE
12	2	110658	WASHER, 1/2" FLAT STANDARD
13	1	205043	INSTALL HARDWARE
14	1	210459	HITCH BALL AND NUT
15	1	215128	BALL WELL DOOR WELDMENT
16	1	211202	VALVE COVER
17	1	211481	Molding, Valve Cover (200249)
18	1	215230	CENTER TAILBOARD DOOR WELDMENT, UPPER
19	1	215400	Weldment, Tailboard Camera Mount
20	1	210892	Hinge Rod, Lid Recessed Well
21	2	210920	Hinge Clip

12/7/2021

600 & 700 Series Common Parts

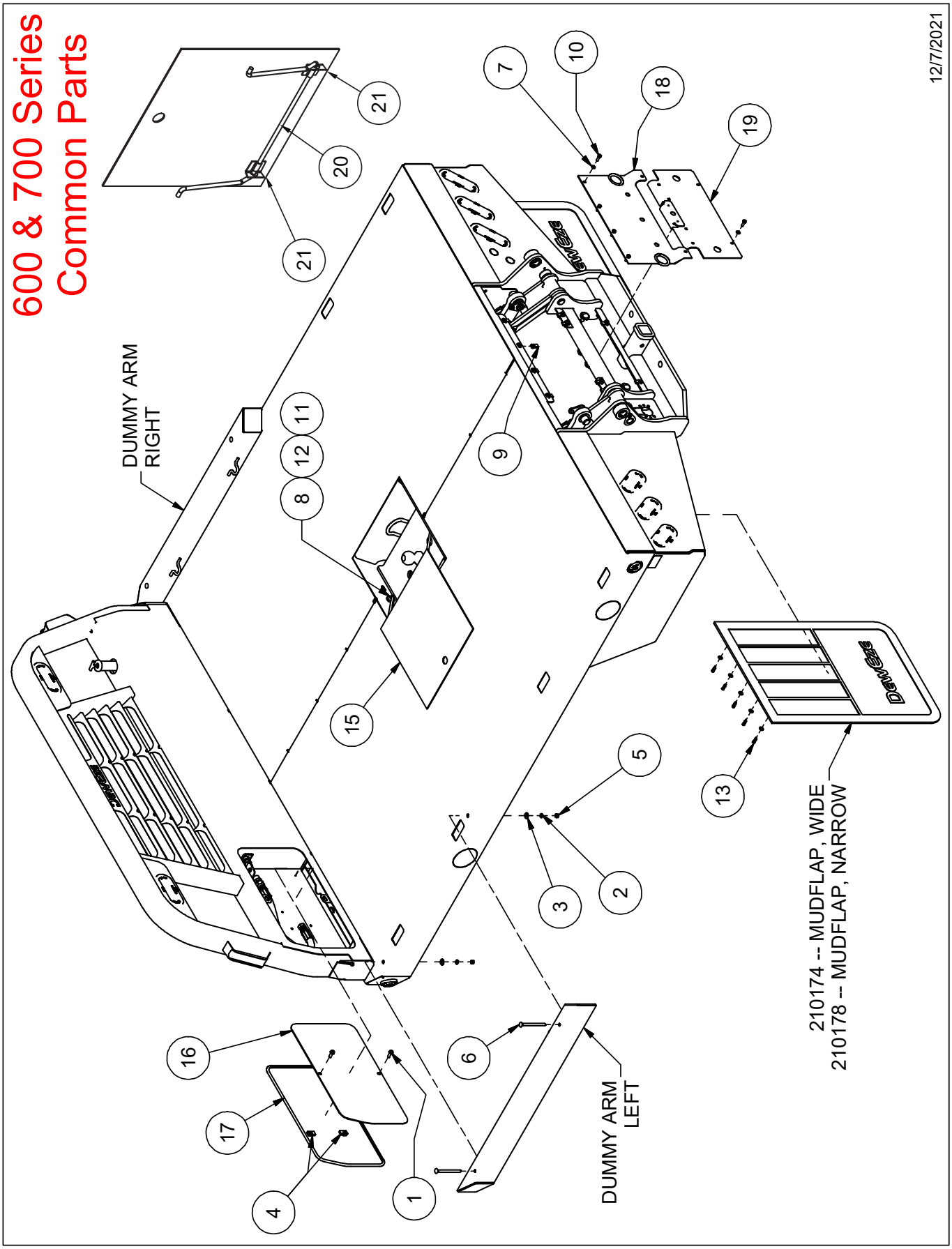

12/7/2021

Crosstubes, Arms & Squeeze Cylinders

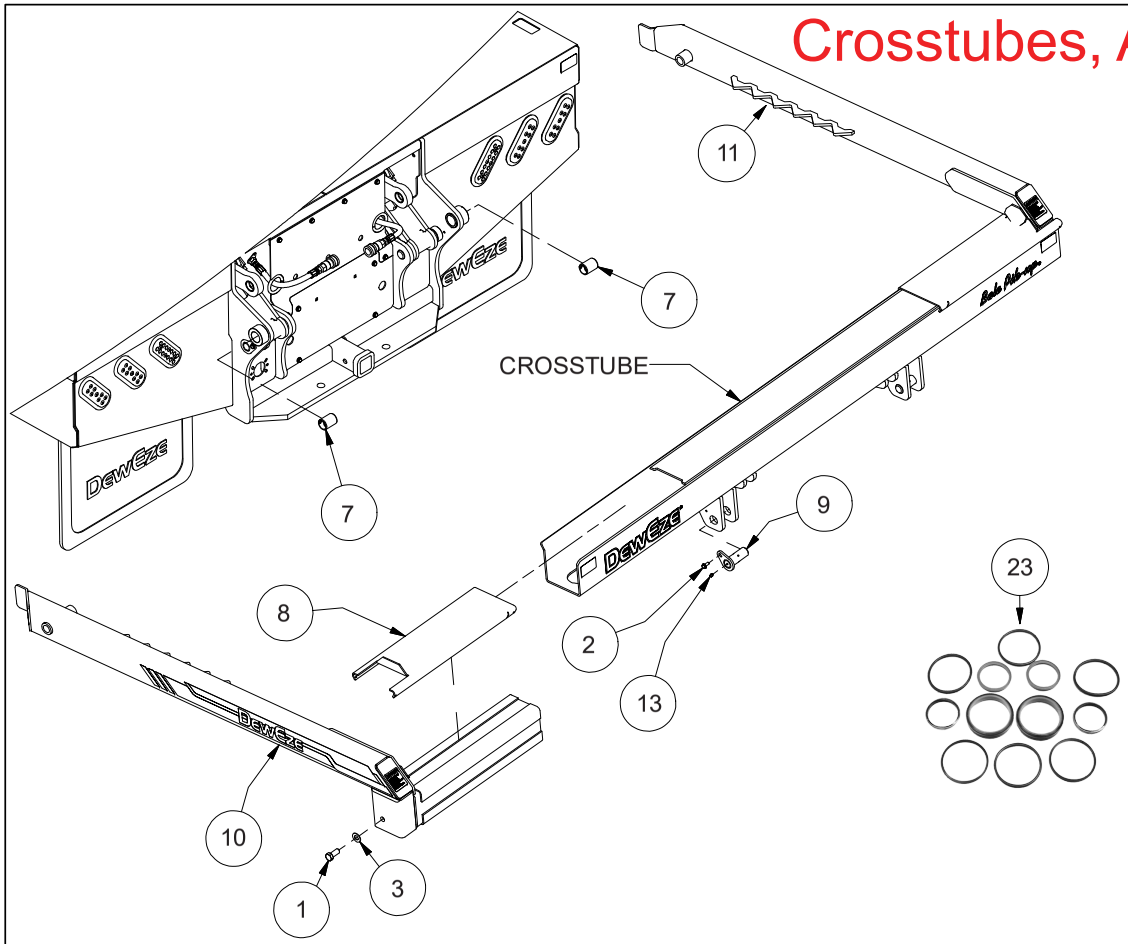

PARTS LIST			
ITEM	QTY	PART #	DESCRIPTION
1	2	110365	Bolt, 5/8-18 X 1.5 Gr 5
2	10	110444	Bolt, 5/16-18 X 0.75, Wiz Flange
3	2	110663	Washer, 5/8" Flat Sae
4	1	120078	Adapter, 6mb-6mp (3/8 X 2-1/2)
5	1	120147	Adapter, 6mb-8mp90
6	1	120311	Adapter, 8mp-6fpx90
7	2	202023	Bushing, 1.5 X 1.25 X 2.0 Split Cg/ld
8	2	211292	Shield, Crossarm
9	2	215140	Pin Weldment, 1-1/4 X 3
10	1	215167	Weldment, Hugger Arm Left
11	1	215168	Weldment, Hugger Arm Right
12	2	420005	Coupler, Pioneer Male
13	8	510174	Grease Zerk, 1/4-28 St
14	2	120582	Coupler, Pioneer Male, ORB
15	2	120756	Adapter, 8mb-6mb Adjustable
16	1	220002	OLD (Short) Cylinder, 2 x 34 Center Port
17	1	223032	OLD (Med) Cylinder, 2 x 35.75 Center Port
18	1	223001	OLD (Long) Cylinder, 2 x 39.25 Center Port
19	1	223119	NEW (Short) Cylinder, 2 x 34 Side Port
20	1	223121	NEW (Long) Cylinder, 2 x 39.25 Side Port
21	1	223026	OLD (SSQ) Cylinder, 2 x 39.25 Center Port
22	1	223110	NEW (SSQ) Cylinder, 2 x 39.25 Side Port
23	KIT	220056	Seal Kit, Squeeze Cylinders

OLD (Center Port) SQUEEZE: SHORT, MEDIUM, LONG

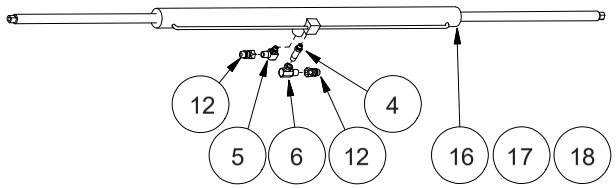

NEW (Side Port) SQUEEZE: SHORT or LONG

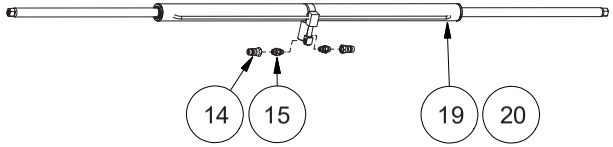

OLD (Center Port) SSQ

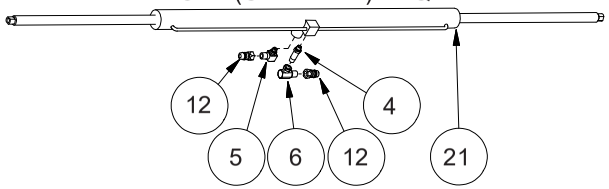

NEW (Side Port) SSQ

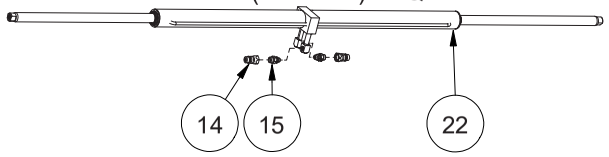

CROSSTUBES		
Bed Width	PART #	Models
85.375”	215149	670, 671, 675, 676, 677, & 679
93.0”	215162	682, 684, 687, & 688
96.5”	215138	770,778,776,782,784,787,& 788

NOTE: New SIDE PORT cylinders are available for short, long and SSQ configurations. They use fewer fittings, are less hassle, and decrease the possiblity of leakage.

Flatbed Squeeze Cylinders

Bed Width	Model #		Squeeze Cylinder	Model #	
85.375"	670		220002	470	
	675			475	
	676				
	677			477	
	679			479	
91.375"			220002	482	
				482	XRM
				484	
				484	XRM
				487	
				487	XRM
				488	
				488	XRM
93.0"	682		223032		
	682	XRM			
	684				
	684	XRM			
	687				
	687	XRM			
	688				
	688	XRM			
96.5"	770		223001		
	770	XRM			
	778			578	
	778	XRM		578	XRM
	776				
	776	XRM			
	782			582	
	782	XRM		582	XRM
	784				
	784	XRM			
	787			587	
	787	XRM		587	XRM
	788				
	788	XRM			
85.375	670	XRM	223001	470	XRM
	675	XRM		475	XRM
	676	XRM			
	677	XRM		477	XRM
	679	XRM		479	XRM

A **Synchronized Squeeze Cylinder**

Part # **223026**

is available as an option for all beds.

This cylinder is the same length as # **223001.**

Squeeze Cylinder Seal Kit Part # 220056

10/28/2016

Dual Lift Hydraulics Assy

Squeeze Cylinders		
Bed Width	Bed #'s	Part #
85.3.75	675	220002
93.0	682	223032
96.5	778	223001

SEE CHART FOR MORE DETAILS

Synchronized Squeeze Cylinder
Part # 223026

Squeeze Cyl Seal Kit
Part# 220056

Dual Lift Cylinders
Anniversary Part# 223030
Production Part# 223038
Seal Kit Part# 212012

Parts List			
ITEM	QTY	PART #	DESCRIPTION
1	2	110352	BOLT, 1-8 X 10, GR8
2	2	110649	WASHER, 1" LOCK
3	1	120078	ADAPTER, 6MB-6MP (3/8 X 2-1/2)
4	1	120147	ADAPTER, 6MB-8MP90
5	2	120242	ADAPTER, 8MJ-8MJ-8MJ
6	1	120311	ADAPTER, 8MP-6FPX90
7	4	120319	ADAPTER, 6MJ-6MB
8	2	202022	SPRING, 1" O.D. X 12" L X .105 WIRE
9	2	215144	KEEPER, 1 IN NUT, WELDMENT
10	2	220084	COUPLER, PIONEER FEMALE
11	4	220681	HOSE ASSY, FLATBED DUAL LIFT
12	2	220682	HOSE ASSY, FLATBED SQUEEZE SHORT
13	2	223038	LIFT CYLINDER 3.50 X 16.6
14	2	260111	MOUNT, HOSE SPRING
15	2	420005	COUPLER, PIONEER MALE

600 - 700 WITH GENERATION 2 VALVES

COMMON HOSES		SQUEEZE HOSES SHORT	LIFT HOSES SHORT	RESERVOIR RETURN	HYDRAULIC HOSE KIT #
		6MTF3 - 8FJX / 8MP	8M3K - 6FJX / 8FJX	12-10FJX / 12-12MPX90	
		2 ea.	4 ea.	1 ea.	
		220682 (17 in.)	220681 (17 in.)	220691 (12.25 in.)	**223033**
FLATBED LENGTH		**SQUEEZE HOSES**	**LIFT HOSES**		
		8M3K - 8FJX / 8MJ	8M3K - 6FJX / 8FJX		
		2 ea.	2 ea.		
80 in.	_70	220683 (106 in.)	220687 (76 in.)		**223034**
96 in.	_75 & _78	220684 (132 in.)	220689 (111 in.)		**223036**
106-110 in.	_77 & _82, _79 & _84	220685 (132 in.)	220689 (111 in.)		**223036**
132-136 in.	_87 & _88	220686 (158 in.)	220690 (137 in.)		**223037**

6/15/2012

Dual Lift Hydraulics Assy

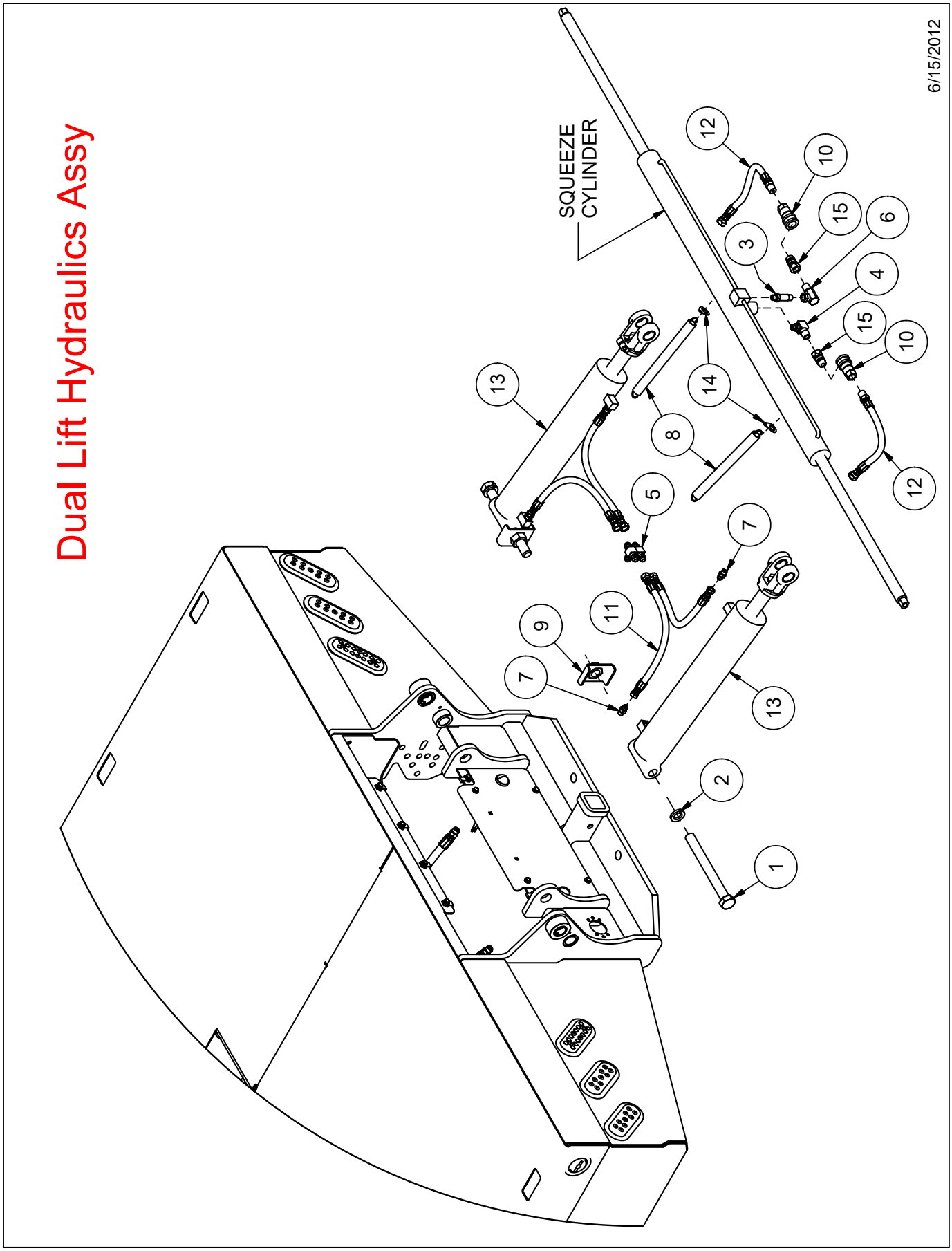

Dual Lift Common Hydraulics
With Generation 3 Valve

Dual Lift Cylinders
Production Part# 223038
Seal Kit Part# 212012

Parts List			
ITEM	QTY	PART #	DESCRIPTION
1	4	110336	WASHER, 1-1/4" FLAT MACHINE
2	10	110444	BOLT, 5/16-18 X 0.75, WIZ FLANGE
3	2	110649	WASHER, 1" LOCK
4	2	120242	ADAPTER, 8MJ-8MJ-8MJ
5	4	120319	ADAPTER, 6MJ-6MB
6	2	200150	ROLL PIN, 1/4 X 2
7	2	202022	SPRING, 1" O.D. X 12" L X .105 WIRE
8	2	210935	IDLER ARM, MACHINE DWG.
9	2	214002	PUSH ARM ASSY, DUAL LIFT
10	2	215141	PIN WELDMENT, 1-1/4 X 7
11	2	215142	PIN WELDMENT, 1-1/4 X 4
12	2	215144	KEEPER, 1 IN NUT, WELDMENT
13	2	215148	PIN WELDMENT, CROSSTUBE LINK
14	2	220084	COUPLER, PIONEER FEMALE
15	4	220681	HOSE ASSY, FLATBED DUAL LIFT
16	2	220682	HOSE ASSY, FLATBED SQUEEZE SHORT
17	2	223038	LIFT CYLINDER 3.50 X 16.6
18	2	260111	MOUNT, HOSE SPRING
19	2	260760	Bolt, 1-8 x 10, Greasable
20	10	510174	GREASE ZERK, 1/4-28 ST

600 - 700 WITH GENERATION 3 VALVES

COMMON HOSES		SQUEEZE HOSES SHORT	LIFT HOSES SHORT	RESERVOIR RETURN	HYDRAULIC HOSE KIT #
		6MTF3 - 8FJX / 8MP	8M3K - 6FJX / 8FJX	12-10FJX / 12-12FJX	
		2 ea.	4 ea.	1 ea.	
		220682 (17 in.)	220681 (17 in.)	220723 (25 in.)	**223051**
FLATBED LENGTH		**SQUEEZE HOSES**	**LIFT HOSES**		
		8M3K - 8FJX / 8MJ	8M3K - 6FJX / 8FJX		
		2 ea.	2 ea.		
80 in.	_70, _71	220683 (106 in.)	220687 (76 in.)		**223034**
96 &101 in.	_75, _76 & _78	220685 (132 in.)	220689 (111 in.)		**223036**
106-110 in.	_77 & _82, _79 & _84	220685 (132 in.)	220689 (111 in.)		**223036**
132-136 in.	_87 & _88	220686 (158 in.)	220690 (137 in.)		**223037**

12/4/2019

Dual Lift Common Hydraulics

With Generation 3 Valve

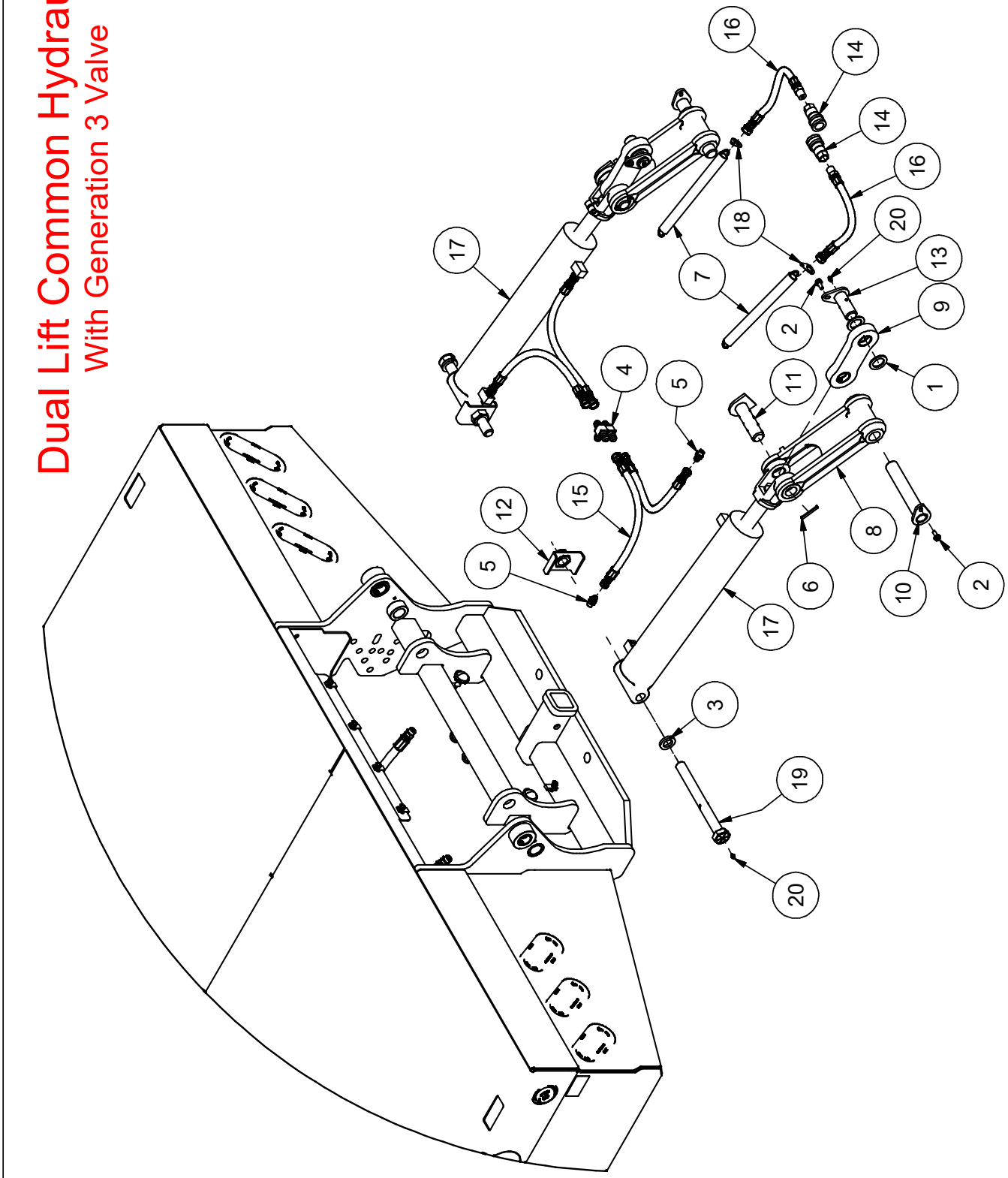

12/4/2019

Dual Lift Hydraulics
Valve & Filter

Parts List			
ITEM	QTY	PART #	DESCRIPTION
1	1	223016	VALVE, FLATBED MONOBLOCK
2	1	120493	ADAPTER, 10MJ-8MB
3	2	120288	ADAPTER, 8MJ-8MB90
4	2	120134	ADAPTER, 6MJ-8MB90
5	2	110674	WASHER, 5/16" LOCK
6	2	110608	NUT, 5/16-18
7	2	110538	BOLT, 5/16-18 X 3.0
8	1	720043	FILTER, 10 MICRON
9	1	720041	FILTER HEAD
10	1	260265	MOUNTING BRACKET, FILTER
11	1	222039	Valve, Check With .075 Orifice
12	1	220691	RESERVOIR RETURN
13	1	120244	ADAPTER, 12MJ-12MP
14	4	110434	BOLT, 1/4-20 X 0.5, WIZ FLANGE
15	2	110290	NUT, 1/4-20 WIZ FLANGE

****

5,7 & 9 Gallon System
120277 -- Adapter 8MJ-8MB

12 & 17 Gallon System
120174 -- Adapter 8MB-12FPX

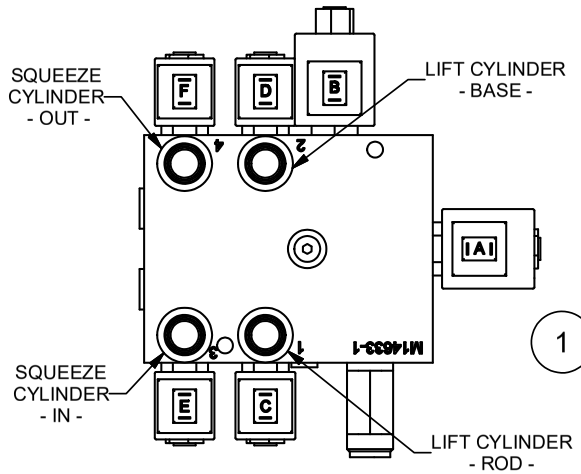

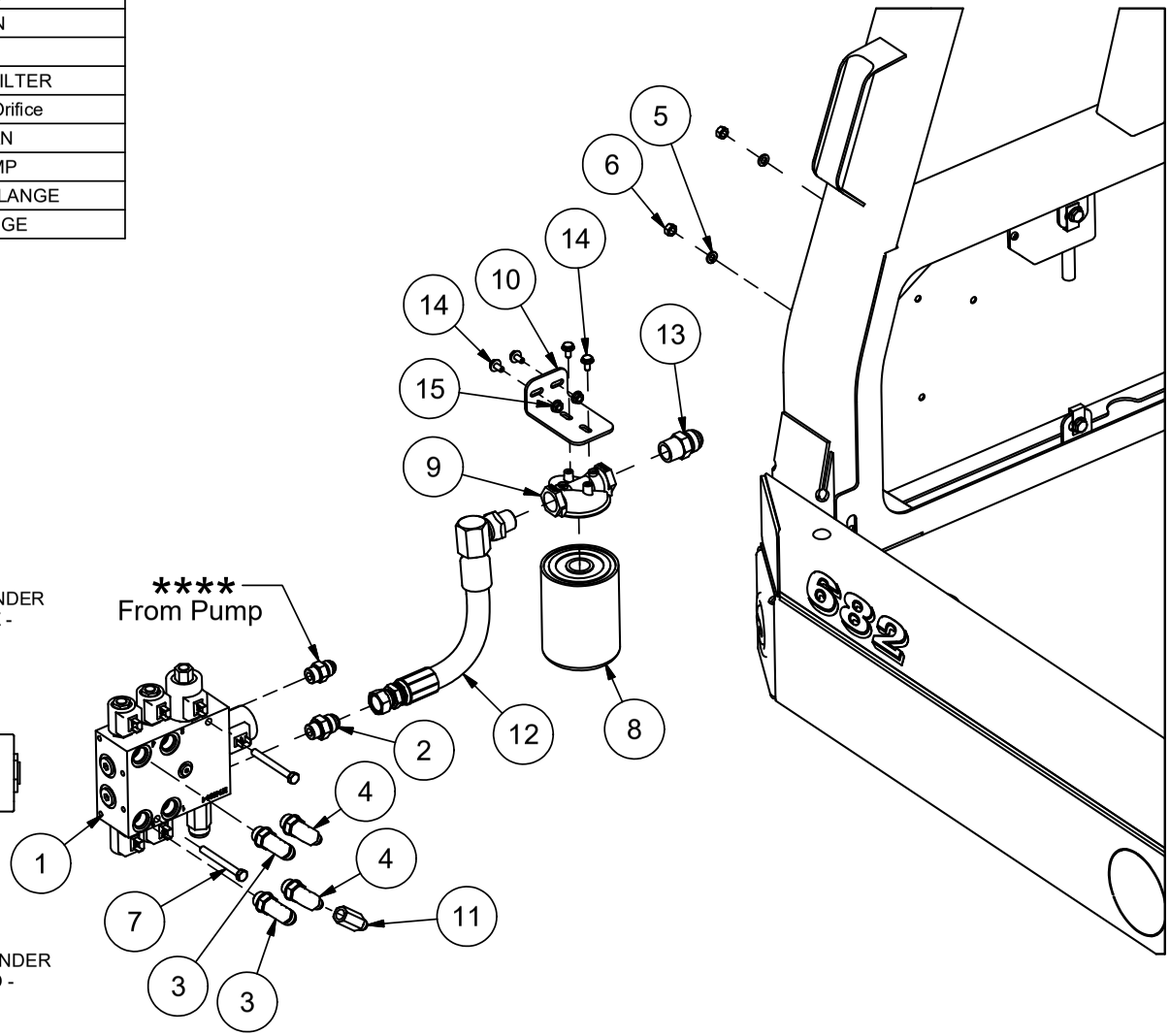

6/6/2012

Valve & Filter

Gen 3 Double Poppet

Parts List			
ITEM	QTY	PART #	DESCRIPTION
1	2	110538	BOLT, 5/16-18 X 3.0
2	2	110608	NUT, 5/16-18
3	2	110674	WASHER, 5/16" LOCK
4	2	120134	ADAPTER, 6MJ-8MB90
5	1	120277	ADAPTER, 8MJ-8MB
6	2	120288	ADAPTER, 8MJ-8MB90
7	1	120493	ADAPTER, 10MJ-8MB
8	2	110290	NUT, 1/4-20 WIZ FLANGE
9	4	110434	BOLT, 1/4-20 X 0.5, WIZ FLANGE
10	2	120244	ADAPTER, 12MJ-12MP
11	1	260265	MOUNTING BRACKET, FILTER
12	1	720041	FILTER HEAD
13	1	720043	FILTER, 10 MICRON
14	1	220723	HOSE, VALVE TO FILTER
15	1	222039	Valve, Check With .075 Orifice
16	1	223044	Flatbed Valve, Small, Monoblock Ver II

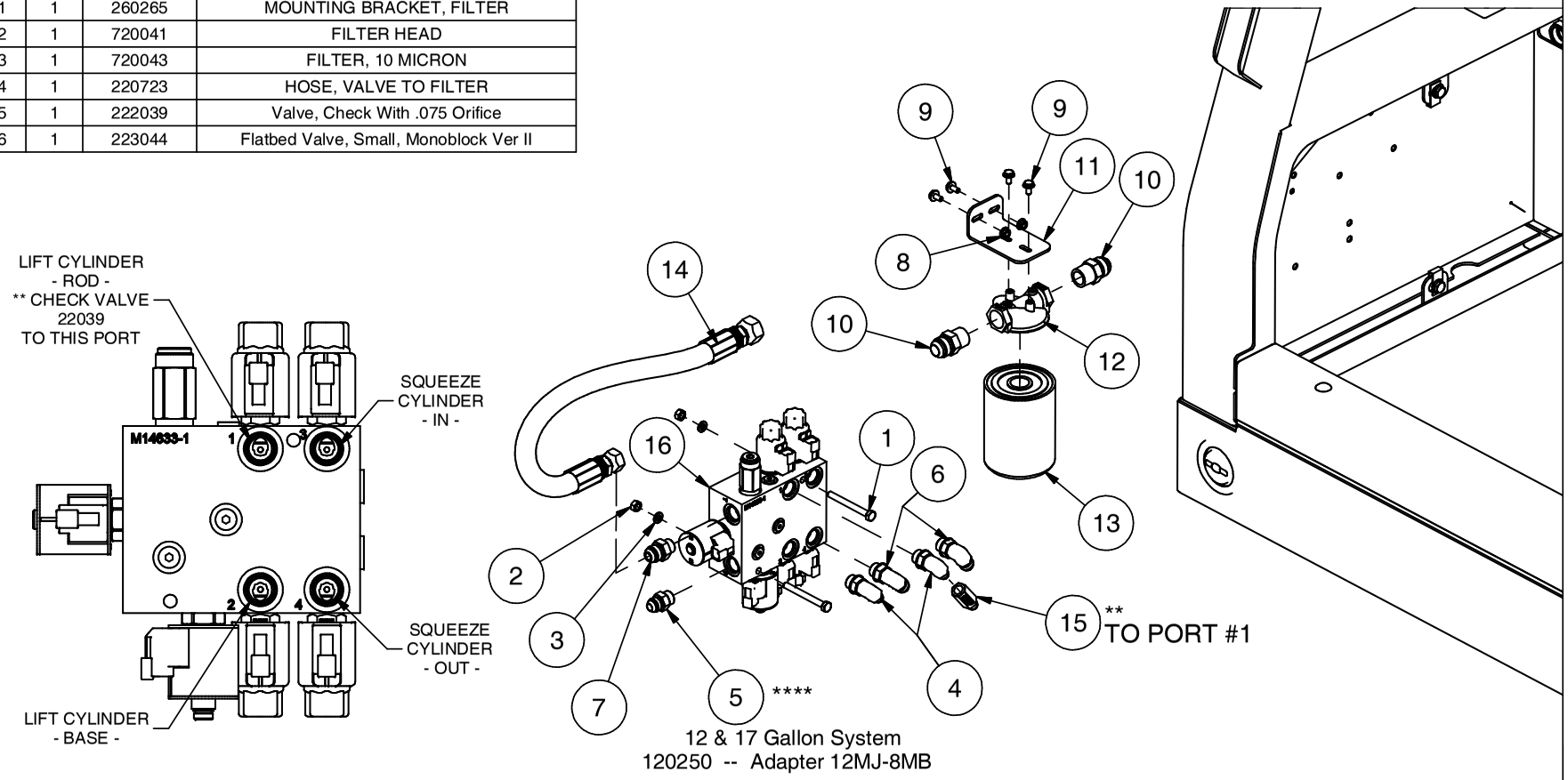

12 & 17 Gallon System
120250 -- Adapter 12MJ-8MB

Also As Required
120368 -- Adapter 8mj-8fjx90
120267 -- Adapter 12mj-12fjx90

9/18/2014

GEN 2 VALVE - SERVICE PARTS

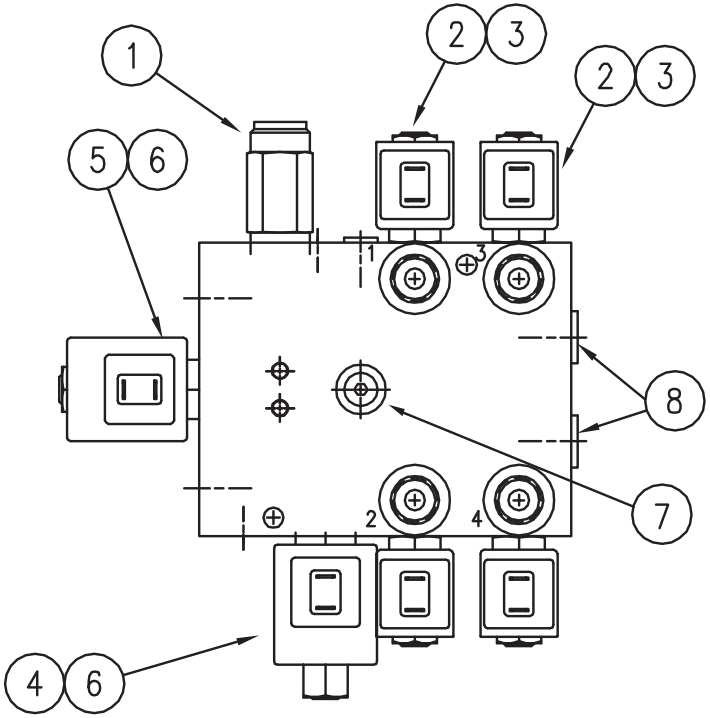

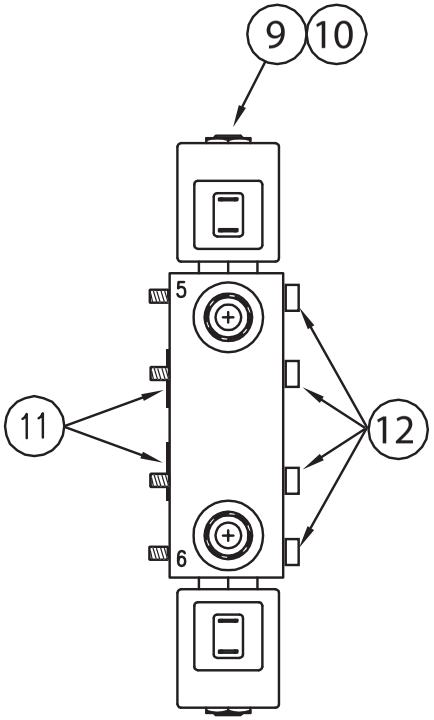

ITEM NO	DESCRIPTION	PART NO.	QUAN
1	VALVE, PRESSURE RELIEF	222004	1
2	CARTRIDGE, #8 VALVE, W/O COIL	720015	4
3	COIL, #8 VALVE, 12 VOLT	820143	4
4	SPOOL, #10 VALVE	820232	1
5	VALVE, DIRECTIONAL, 4-WAY	222002	1
6	COIL, #10 VALVE, 12 VOLT	820229	2
7	O-RING, ADAPTER #4 7/16-20	120062	2
8	O-RING, ADAPTER #8 3/4-16	720164	2
	VALVE, MONOBLOCK, COMPLETE	**223016**	1

VALVE FOR ADDITIONAL THIRD BANK

ITEM NO	DESCRIPTION	PART NO.	QUAN
9	VALVE, POPPET FOR 223017	222003	2
10	COIL, #10 VALVE, 12 VOLT	820229	2
11	O-RING, -219, 90 DURO	120376	2
12	BOLT, 5/16-18 X 2 SHCS	110168	4
	VALVE, 3RD BANK ADD ON (223016)	**223017**	**1**

GEN 3 VALVE
-08 HYDAC DEUTSCH
SERVICE PARTS

Starting S/N's 2014

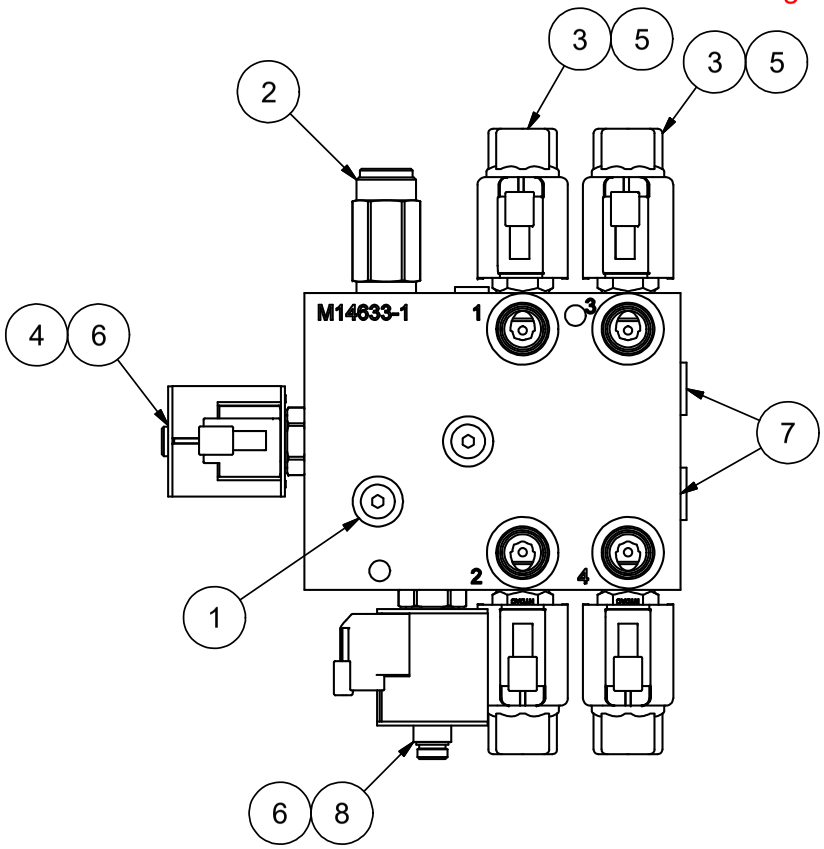

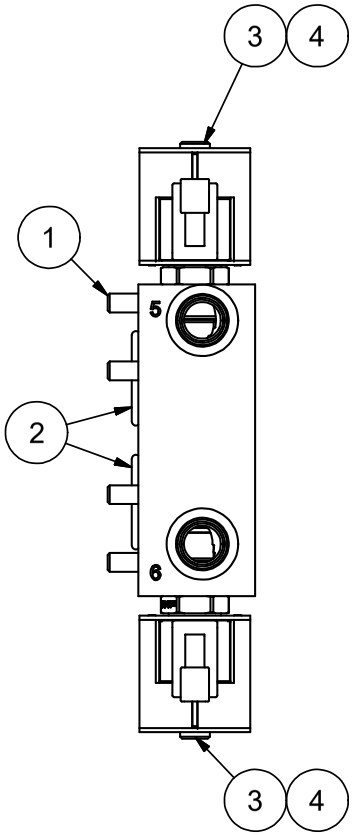

Flatbed Valve, Small, Hydac Deutsch P/N 223044			
ITEM	QTY	PART #	DESCRIPTION
1	2	120062	O-Ring Plug, #4 7/16-20
2	1	222004	Valve, Pressure Relief
3	4	222010	Cartridge, #8 HYDAC Double Poppet
4	1	222045	#10 SOLENOID, 2 POSITION 4 WAY
5	4	222050	Coil, #8 Hydac, Deutsch DT04-2P
6	2	522163	#10 E-COIL, 12 VDC, DEUTSCH DT04-2P
7	2	720164	O-Ring Plug, #8 3/4-16
8	1	820232	Spool, #10 Valve

Valve, 3rd Bank add on P/N 223045			
ITEM	QTY	PART #	DESCRIPTION
1	4	110168	BOLT, 5/16-18 X 2.0 SHCS
2	2	120376	O'RING, -219, 90 DURO
3	2	222003	Valve, Poppet N.C. SOL VALVE
4	2	522163	#10 E-COIL, 12 VDC, DEUTSCH DT04-2P

12/5/2014

GEN 3 VALVE
-08 EATON DEUTSCH
SERVICE PARTS

Starting S/N's Late 2015

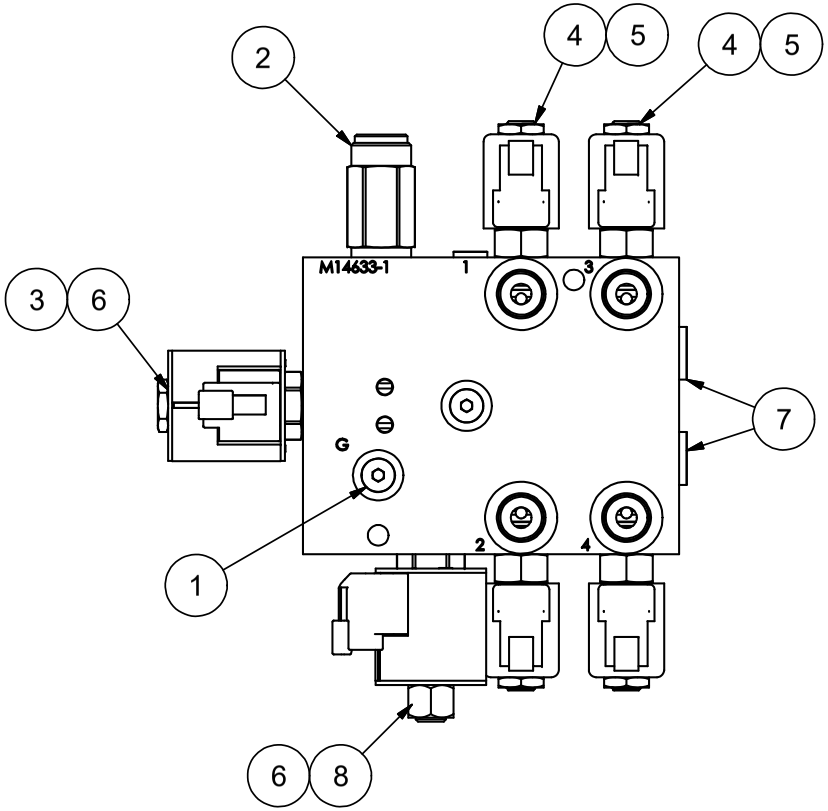

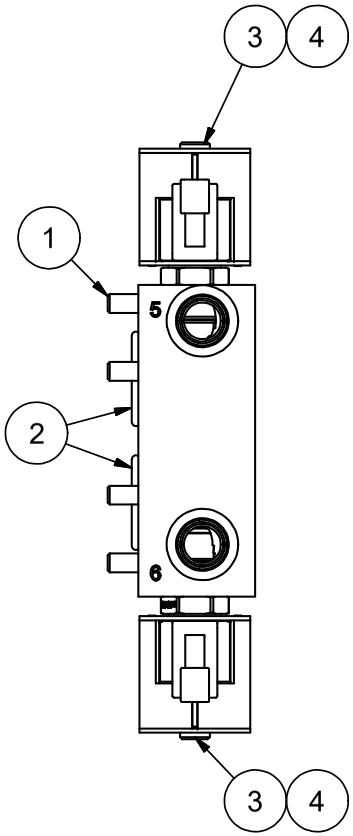

Flatbed Valve, Small, Eaton Deutsch P/N 223044			
ITEM	QTY	PART #	DESCRIPTION
1	3	120062	O-Ring Plug, #4 7/16-20
2	1	222004	Valve, Pressure Relief
3	1	222045	#10 SOLENOID, 2 POSITION 4 WAY
4	4	222056	Valve, #8 Eaton, Dbl Poppet
5	4	222057	Coil, #8 Eaton, 12V, Deutsch DT04-2P
6	2	522163	#10 E-COIL, 12 VDC, DEUTSCH DT04-2P
7	2	720164	O-Ring Plug, #8 3/4-16
8	1	820232	Spool, #10 Valve

Valve, 3rd Bank add on P/N 223045			
ITEM	QTY	PART #	DESCRIPTION
1	4	110168	BOLT, 5/16-18 X 2.0 SHCS
2	2	120376	O'RING, -219, 90 DURO
3	2	222003	Valve, Poppet N.C. SOL VALVE
4	2	522163	#10 E-COIL, 12 VDC, DEUTSCH DT04-2P

8/24/2015

Flatbed Valve -08 Hydac Deutsch Service Parts

Starting S/N's Late 2016

Flatbed Valve, Small, Hydac Deutsch P/N 223044			
ITEM	QTY	PART #	DESCRIPTION
1	3	120062	O-Ring Plug, #4 7/16-20
2	1	222004	Valve, Pressure Relief
3	4	222010	Cartridge, #8 HYDAC Double Poppet
4	1	222045	#10 SOLENOID, 2 POSITION 4 WAY
5	4	222059	Coil, #8 Hydac, DT04-2P Suppressed
6	2	720164	O-Ring Plug, #8 3/4-16
7	1	820232	Spool, #10 Valve
8	2	922119	Coil, #10 Hydraforce, DT04-2P Suppressed

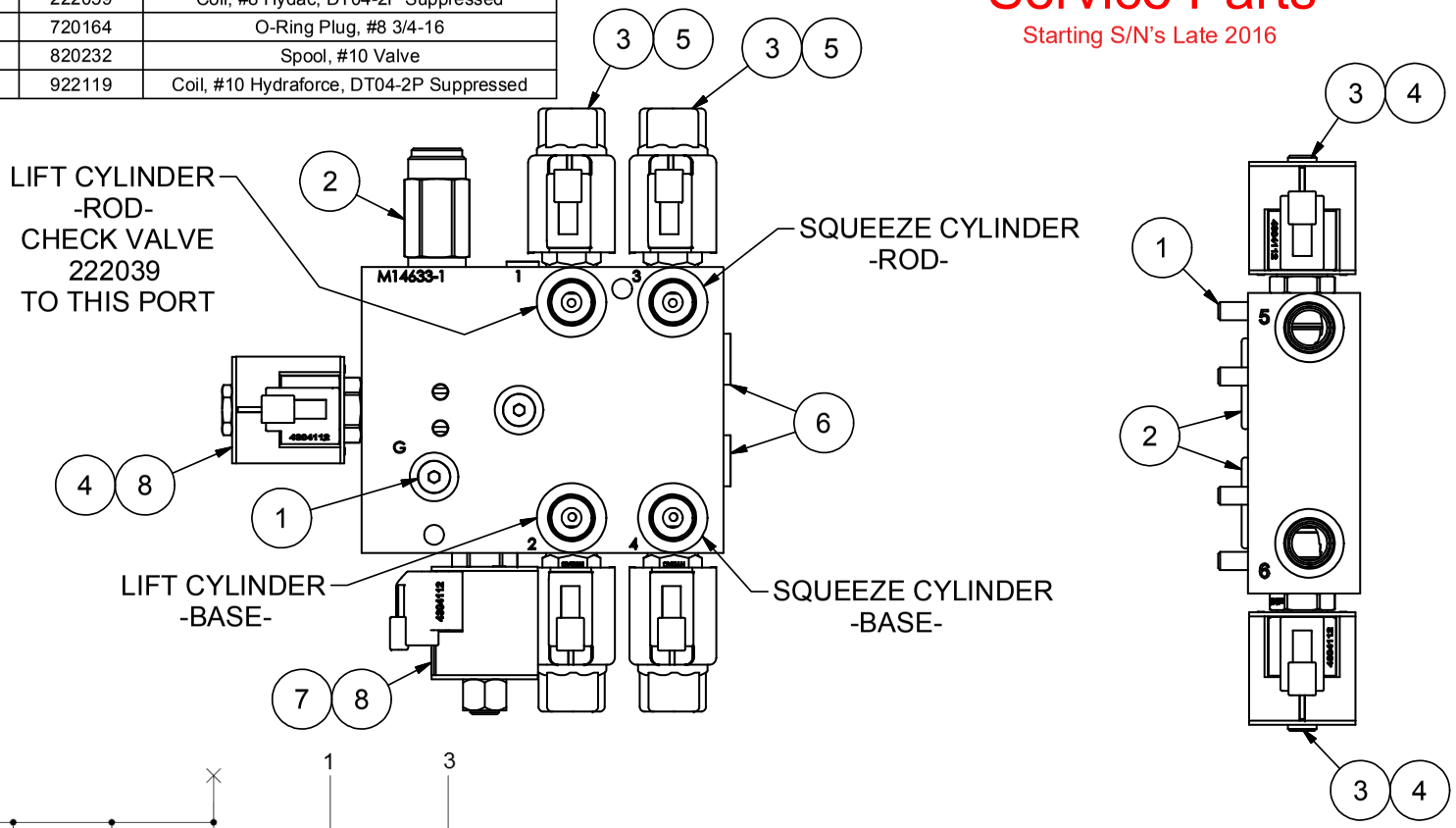

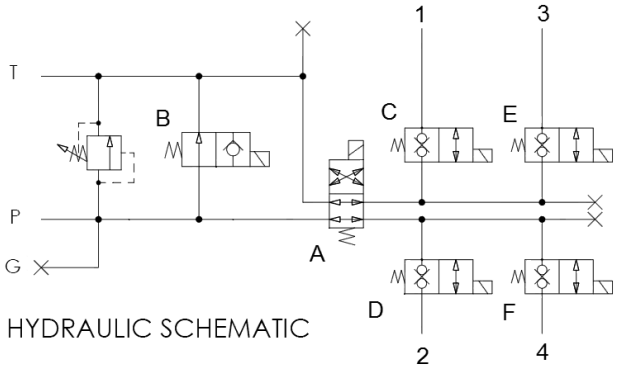

Valve, 3rd Bank add on P/N 223045			
ITEM	QTY	PART #	DESCRIPTION
1	4	110168	BOLT, 5/16-18 X 2.0 SHCS
2	2	120376	O'RING, -219, 90 DURO
3	2	222003	Valve, Poppet N.C. SOL VALVE
4	2	922119	Coil, #10 Hydraforce, DT04-2P Suppressed

11/9/2016

HYDRAULIC ASSEMBLY RESERVOIR

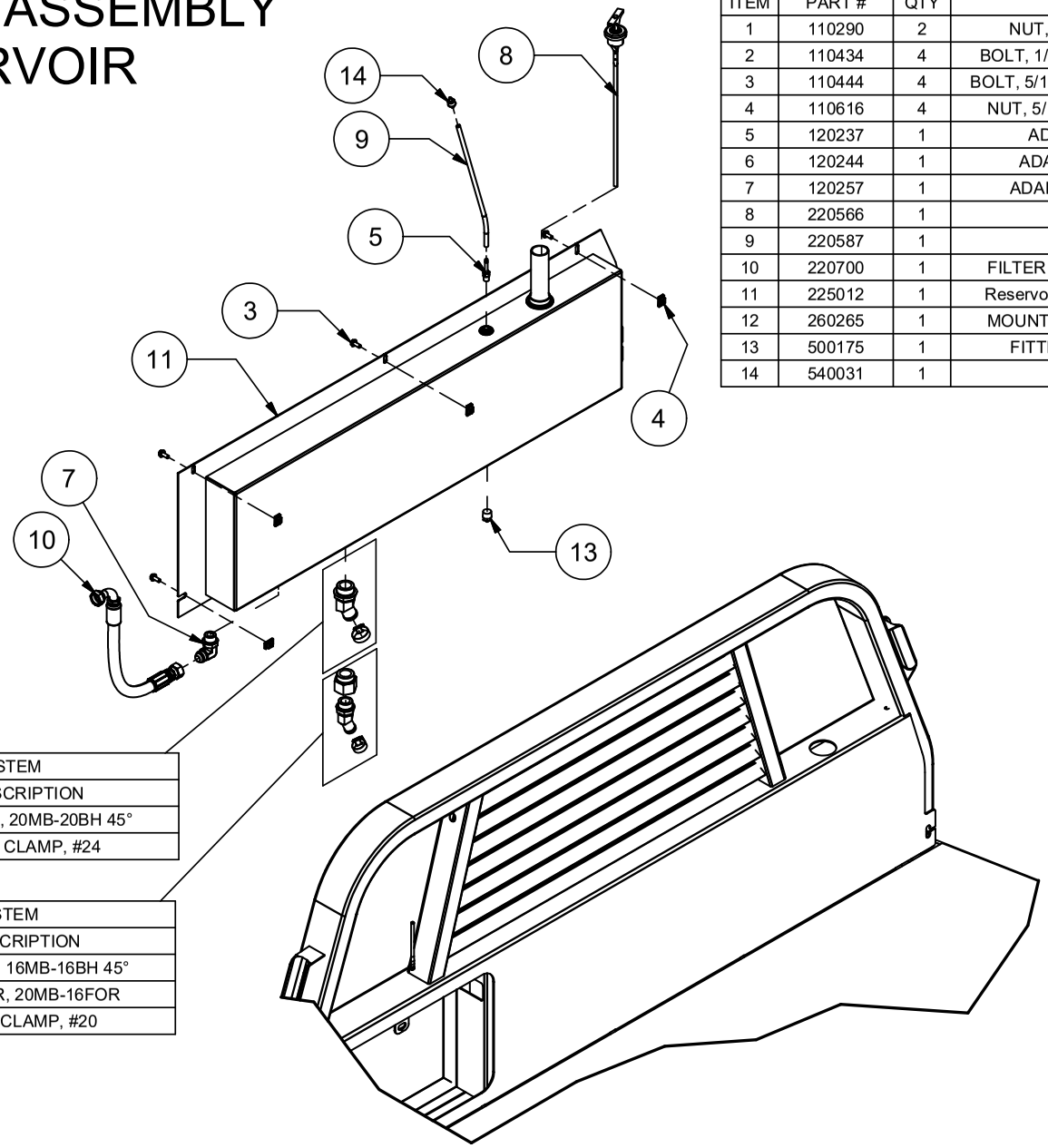

Parts List			
ITEM	PART #	QTY	DESCRIPTION
1	110290	2	NUT, 1/4-20 WIZ FLANGE
2	110434	4	BOLT, 1/4-20 X 0.5, WIZ FLANGE
3	110444	4	BOLT, 5/16-18 X 0.75, WIZ FLANGE
4	110616	4	NUT, 5/16", J-TYPE, CAGE, .5C
5	120237	1	ADAPTER, 4BH-4MP
6	120244	1	ADAPTER, 12MJ-12MP
7	120257	1	ADAPTER, 12MJ-12MB90
8	220566	1	DIP STICK
9	220587	1	VENT HOSE
10	220700	1	FILTER TO RESERVOIR HOSE
11	225012	1	Reservoir, Flatbed, Remote Filter
12	260265	1	MOUNTING BRACKET, FILTER
13	500175	1	FITTING, PLUG 1/2" PIPE
14	540031	1	FUEL FILTER

12 & 17 GALLON SYSTEM		
PART #	QTY	DESCRIPTION
120189	1	ADAPTER, 20MB-20BH 45°
511002	1	HOSE CLAMP, #24

5, 7 & 9 GALLON SYSTEM		
PART #	QTY	DESCRIPTION
120188	1	ADAPTER, 16MB-16BH 45°
120511	1	ADAPTER, 20MB-16FOR
720107	1	HOSE CLAMP, #20

6/15/2012

Flatbed Non-Proportional Hydraulic Schematic

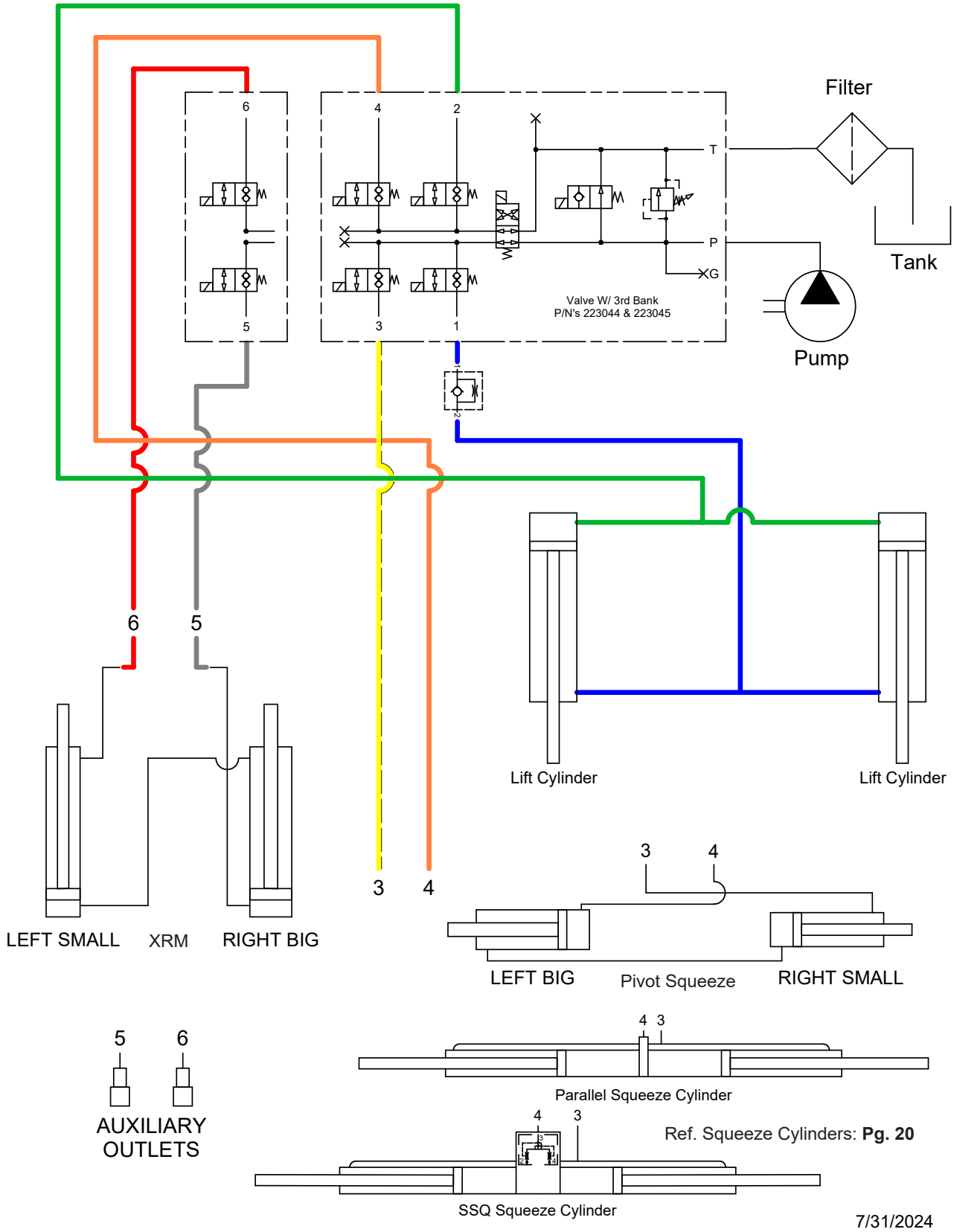

Ref. Squeeze Cylinders: **Pg. 20**

7/31/2024

Dual Lift XRM Parts

Dummy Arms	
Left & Right	Part #
670	215189
671	215384
675	215150
676	215249
677	215191
679	215208
682	215145
684	215193
687	215198
688	215200
770	215210
778	215160
776	215257
782	215158
784	215202
787	215204
788	215206

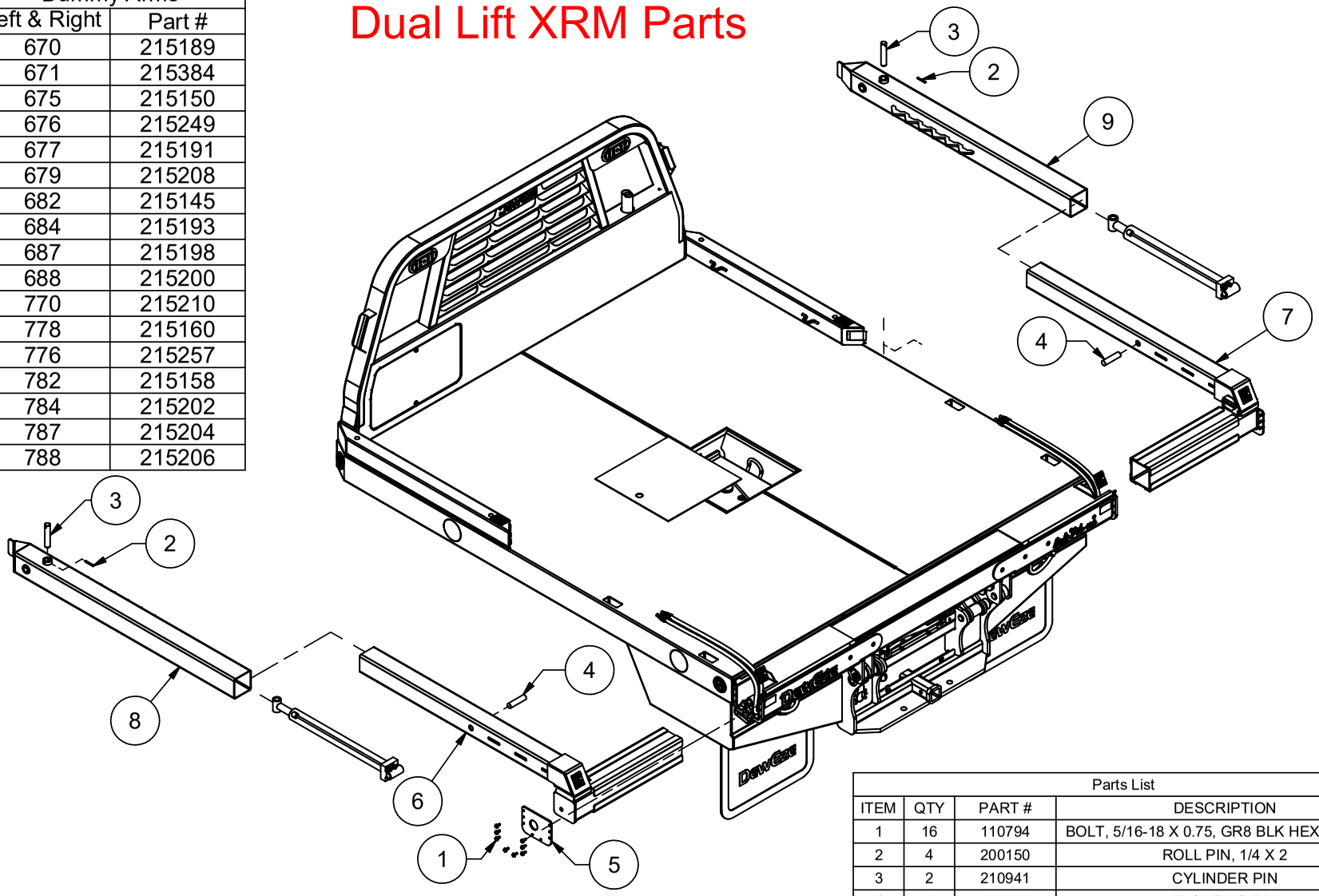

Crosstubes		
Bed Width	Bed #'s	Part #
85.375	670, 671, 675, 676, 677 & 679	212050
93.0	682, 685, 687 & 688	212051
96.5	770, 778, 776, 782, 784, 787 & 788	212049

Parts List			
ITEM	QTY	PART #	DESCRIPTION
1	16	110794	BOLT, 5/16-18 X 0.75, GR8 BLK HEX FLANGE
2	4	200150	ROLL PIN, 1/4 X 2
3	2	210941	CYLINDER PIN
4	2	210942	FLOATING PIN
5	2	211755	CROSSTUBE ENDCAP
6	1	215085	Left, Squeeze Arm XRM, Service Part
7	1	215086	Right, Squeeze Arm XRM, Service Part
8	1	215173	Left, Ext Squeeze Arm, Service Part
9	1	215174	Right, Ext Squeeze Arm, Service Part

6/29/2021

XRM HYDRAULICS

Parts List			
ITEM	PART #	QTY	DESCRIPTION
1	110168	4	BOLT, 5/16-18 X 2.0 SHCS
2	120102	4	ADAPTER, BULKHEAD, 6MJ-6MJ, W/LOCKNUT
3	120123	4	ADAPTER, 6FP-6FJX
4	120134	2	ADAPTER, 6MJ-8MB90
5	120186	4	ADAPTER, 4MB-4FPX
6	120376	2	O-RING, -119, 90 DURO
7	132035	1	SWITCH BOOT
8	220455	1	EXTENDABLE ARM CYLINDER, 2.5
9	220456	1	EXTENDABLE ARM CYLINDER, 2.0
10	223017	1	VALVE, 3rd BANK ADD ON
11	232086	1	SWITCH, DPDT, M, 6 PIN, PUSH ON

SEAL KITS

2.5 CYLINDER	220532
2.0 CYLINDER	220533

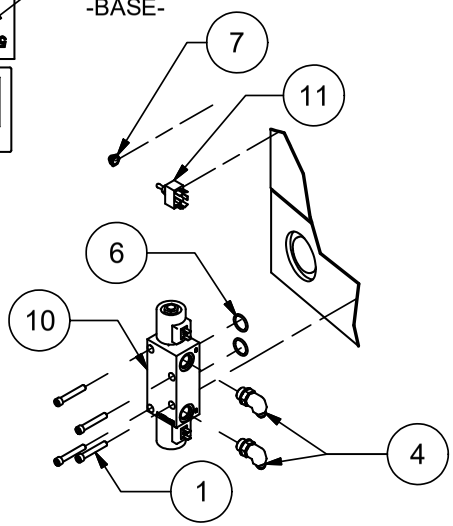

DETAIL C

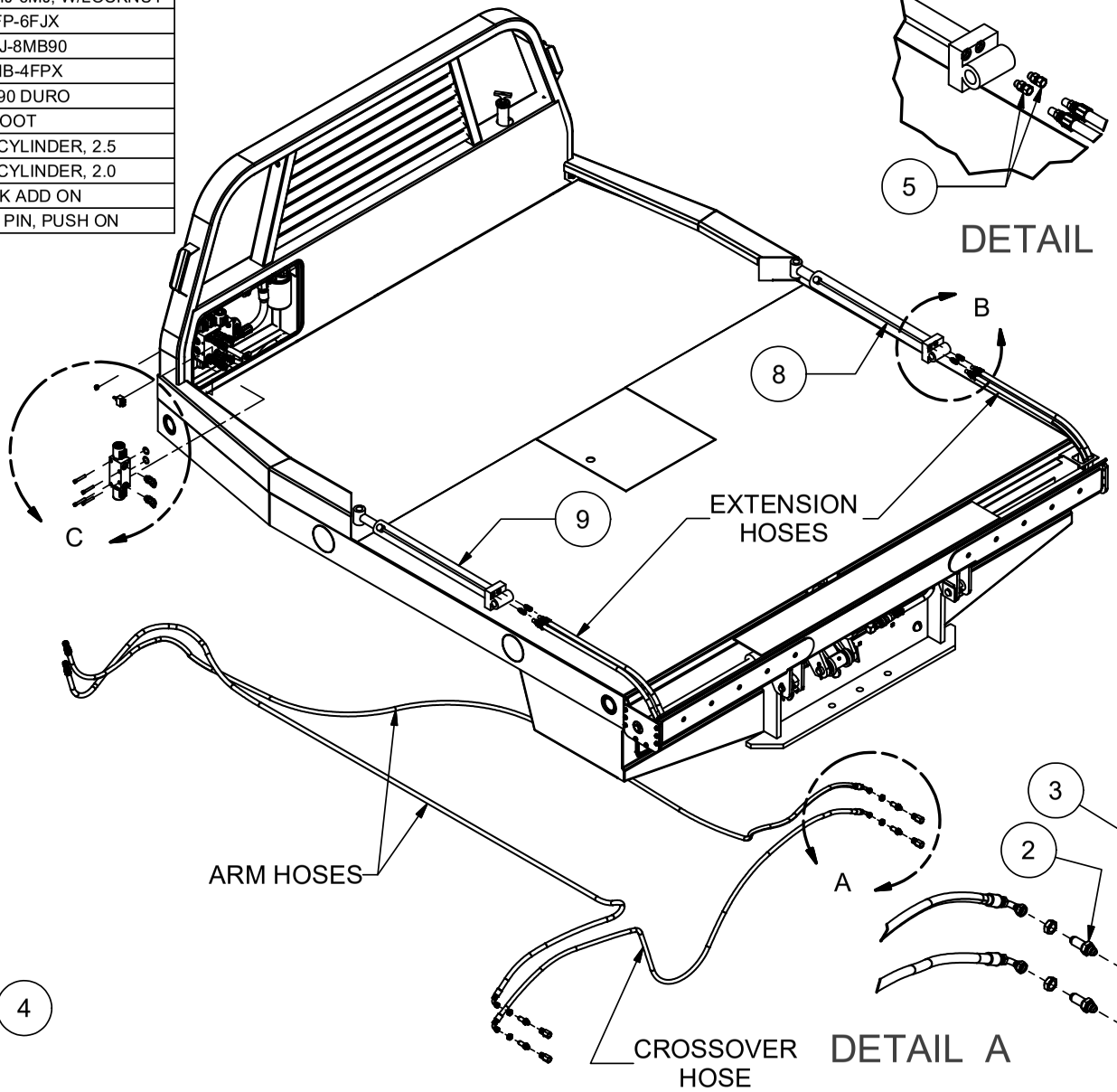

DETAIL B

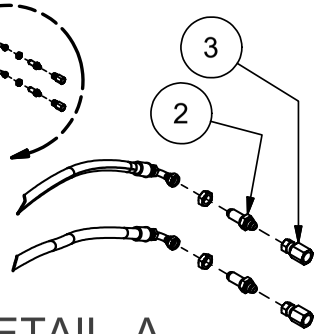

DETAIL A

3/2/2011

XRM Hydraulics
update 2012

Parts List			
ITEM	QTY	PART #	DESCRIPTION
1	4	110168	BOLT, 5/16-18 X 2.0 SHCS
2	2	120134	ADAPTER, 6MJ-8MB90
3	2	120376	O'RING, -219, 90 DURO
4	1	132035	SWITCH BOOT
5	1	132127	Switch, Toggle, DPDT, (On)-OFF-(ON)
6	4	120102	ADAPTER, BULKHEAD, 6MJ-6MJ
7	4	120123	ADAPTER, 6FP-6FJX
8	4	120186	ADAPTER, 4MB-4FPX
9	2	120598	ADAPTER, 6MJ-6FJX 90 BENT TUBE
10	2	120599	ADAPTER, 6MJ-6FJX 90 LONG BENT TUBE
11	1	220455	EXTENSION CYLINDER 2.5
12	1	220456	EXTENSION CYLINDER 2.0
13	1	223017	VALVE, 3rd BANK ADD ON

SEAL KITS

2.5 CYLINDER	220532
2.0 CYLINDER	220533

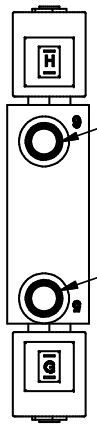

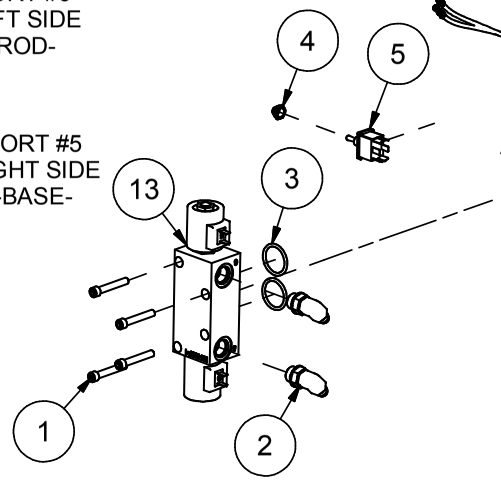

DETAIL C

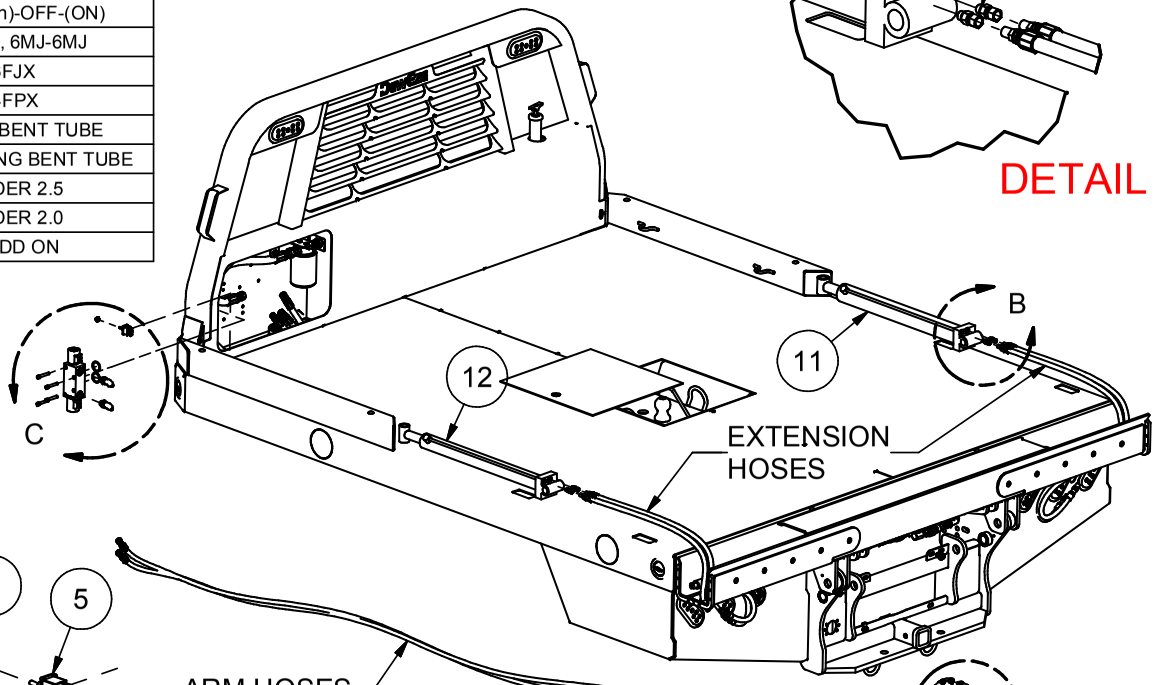

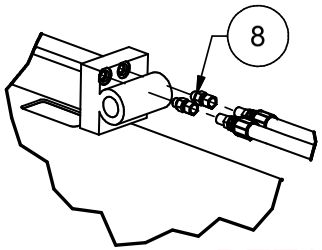

DETAIL B

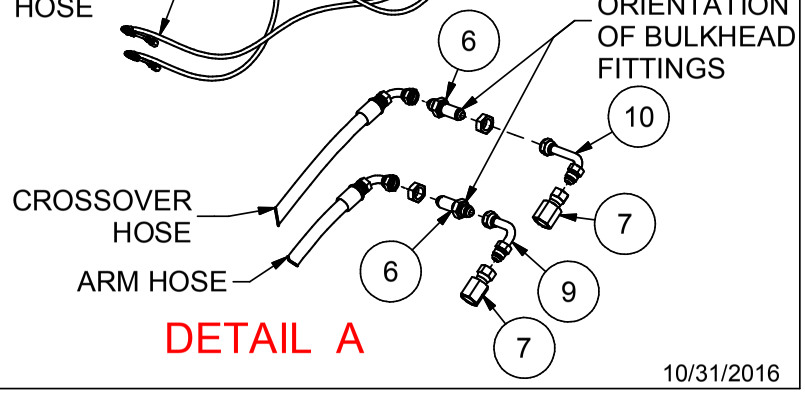

DETAIL A

10/31/2016

XRM HYDRAULICS

XRM SERIES	ARM HOSES 6M3K - 6FJX90M / 6FJX	EXTENSION HOSES 6M3K - 6-4MP / 6MPX	CROSSOVER HOSE 6M3K - 6FJX90M	HYDRAULIC HOSE KIT #
470, 670	2ea 220625 (148in)	4ea 220605 (54.3in)	220601 (79.6in)	**223011**
475, 675, 676	2ea 220626 (164in)	4ea 220605 (54.3in)	220601 (79.6in)	**223010**
477, 479, 482, 484, 677, 679	2ea 220627 (174in)	4ea 220605 (54.3in)	220601 (79.6in)	**223009**
487, 488	2ea 220629 (200in)	4ea 220605 (54.3in)	220601 (79.6in)	**223007**
578, 770, 778, 776	2ea 220626 (164in)	4ea 220605 (54.3in)	220645 (94.0in)	**223021**
582, 682, 684, 782, 784	2ea 220627 (174in)	4ea 220605 (54.3in)	220645 (94.0in)	**223022**
587, 687, 688, 787, 788	2ea 220629 (200in)	4ea 220605 (54.3in)	220645 (94.0in)	**223023**

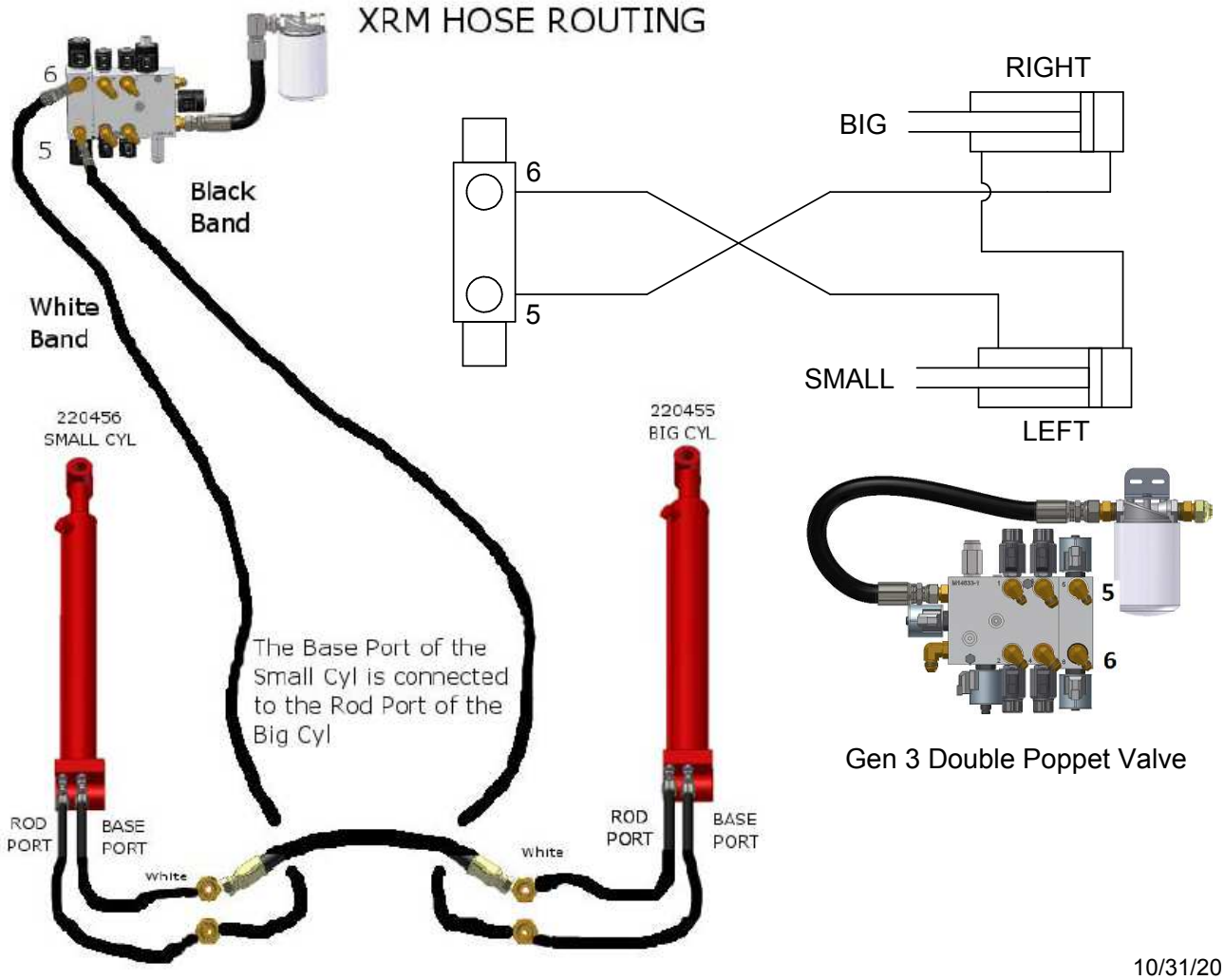

10/31/2016

Deweze Parallel XRM Cylinder Assembly

Dual Lift Cylinders
Production Part# 223038
Seal Kit Part# 212012

Squeeze Cylinders		
Bed Width	Bed #'s	Part #
85.3.75	67--	220002
93.0	68--	223032
96.5	7----	223001
SSQ		223026

Squeeze Cyl Seal Kit
Part# 220056

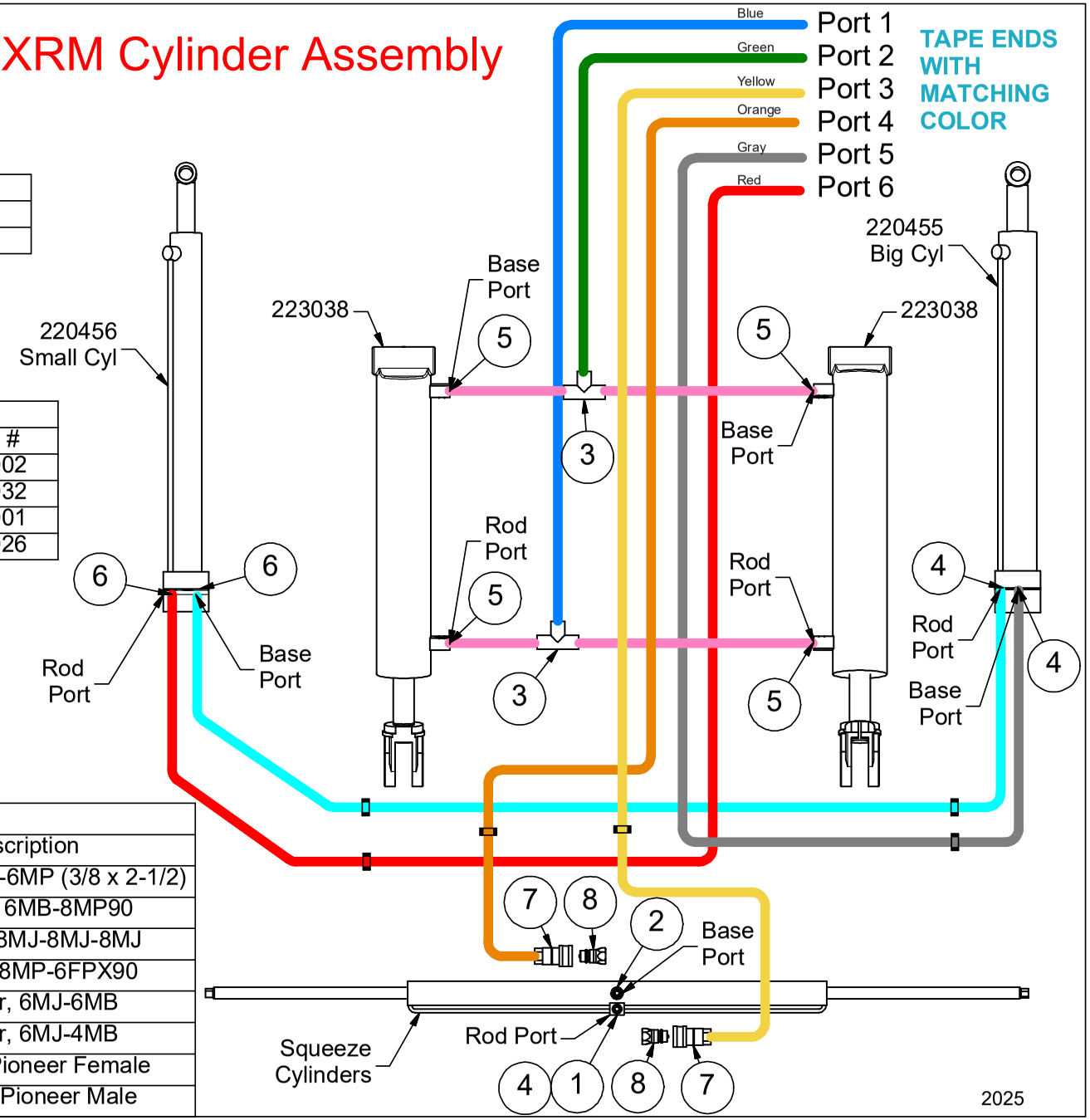

Fittings Table			
Item	Qty	Part #	Description
1	1	120078	Adapter, 6MB-6MP (3/8 x 2-1/2)
2	1	120147	Adapter, 6MB-8MP90
3	2	120242	Adapter, 8MJ-8MJ-8MJ
4	1	120311	Adapter, 8MP-6FPX90
5	8	120319	Adapter, 6MJ-6MB
6	4	120665	Adaptor, 6MJ-4MB
7	2	220084	Coupler, Pioneer Female
8	2	420005	Coupler, Pioneer Male

RF Control & Manual Switches

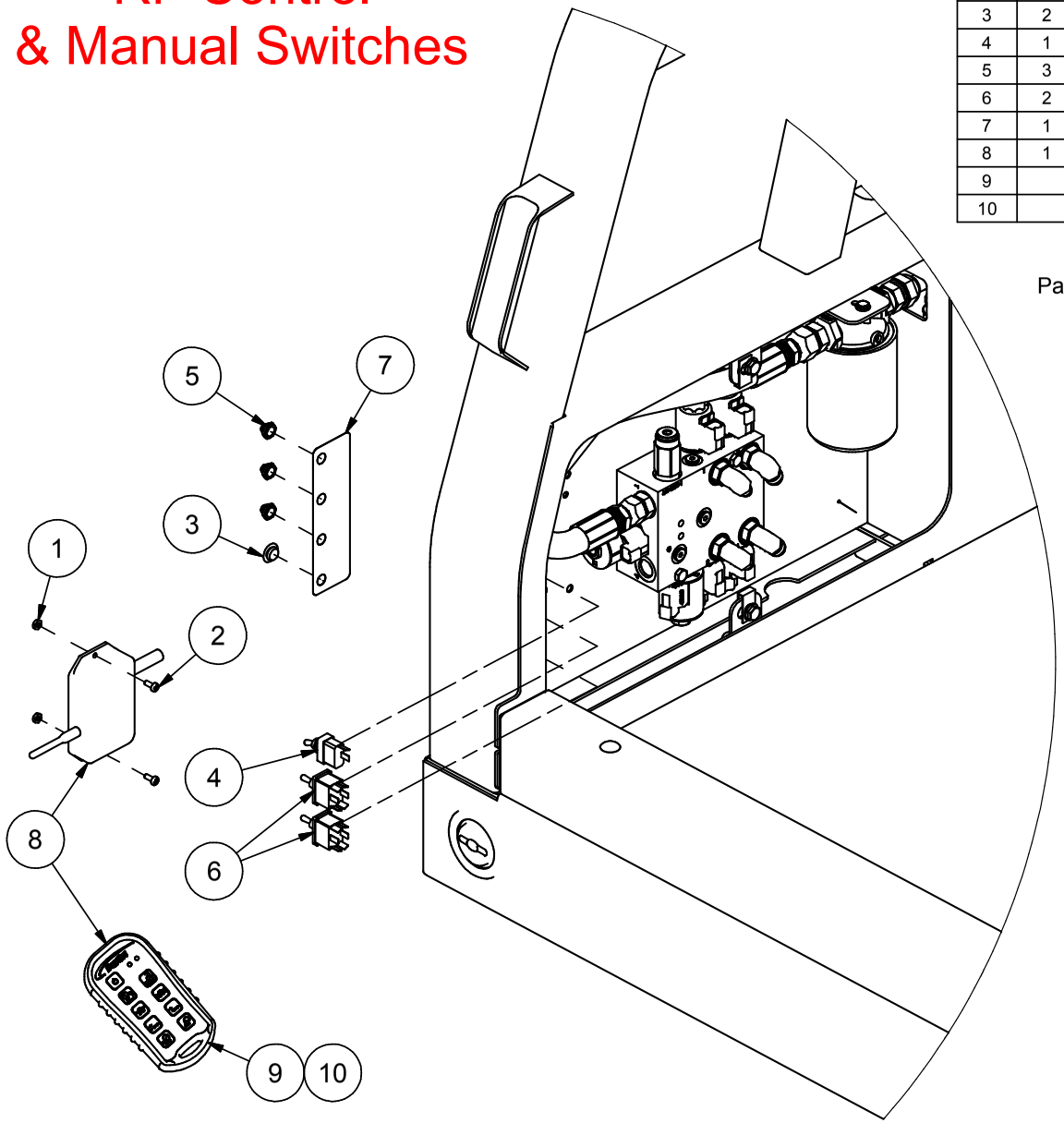

Parts List			
ITEM	QTY	PART #	DESCRIPTION
1	3	110119	NUT, 10-24 LOCK
2	3	110264	BOLT, 10-24 X .5 STAINLESS, PHILLIPS
3	2	110753	PLUG, 1/2" BUTTON PLASTIC
4	1	132027	Switch, Spst, Toggle .250 Tab
5	3	132035	SWITCH BOOT
6	2	132127	Switch, Toggle, DPDT, (On)-OFF-(ON)
7	1	202003	DECAL, SWITCH IDENTIFICATION
8	1	233003	Transmitter & Receiver, Kar-Tech
9		233004	Transmitter, Kar-Tech
10			Two AA Batteries

Part # 132134

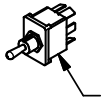

Note: Optional Latching Switch On-Off-On is Available

11/15/2016

ITEM	QUAN	PART #	NAME
1	1	132044	SWITCH, SPST ROCKER LED
2	1	702002	DECAL, DEWEZE HYDRAULICS
3	1	702061	DECAL, PUMP CLUTCH
4	1	732002	HARNESS, CLUTCH CONTROL

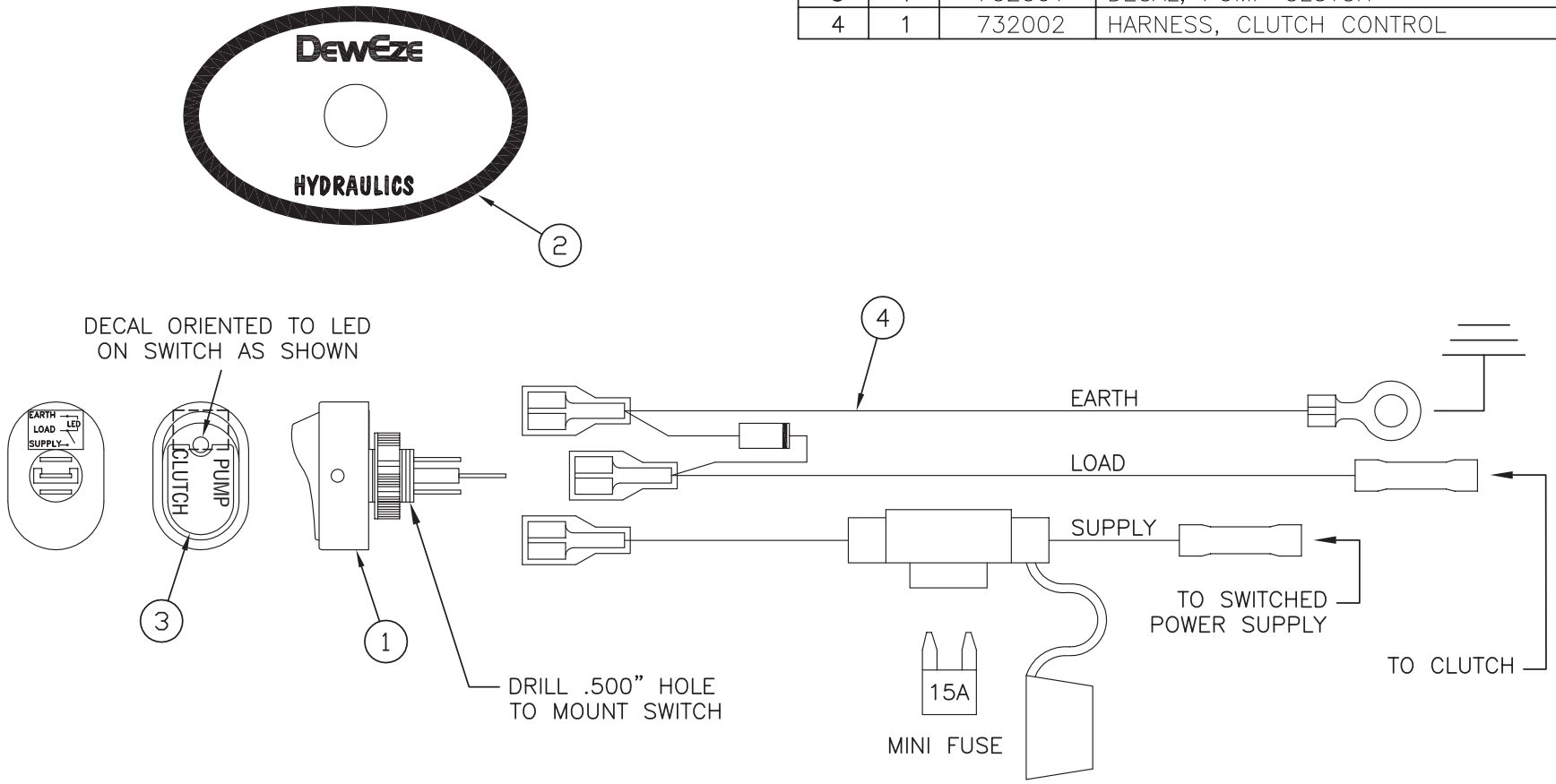

SWITCH, CLUTCH CONTROL ASSY 735001

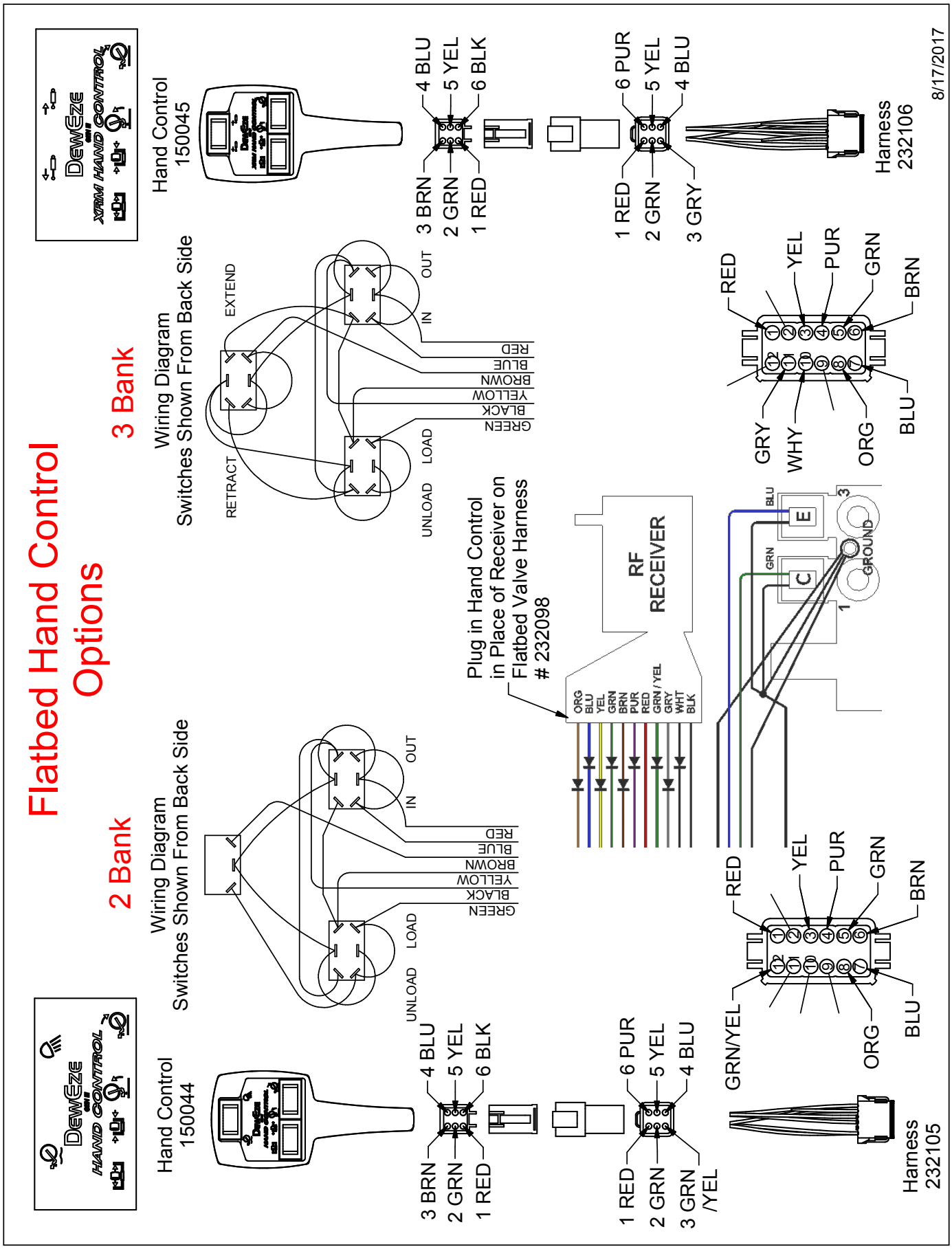
Flatbed Hand Control Options
2 Bank
Wiring Diagram
Switches Shown From Back Side
Hand Control
150044
3 Bank
Wiring Diagram
Switches Shown From Back Side
Hand Control
150045
EXTEND
RETRACT
UNLOAD
LOAD
IN
OUT
GREEN
BLACK
YELLOW
BROWN
BLUE
RED
3 BRN
2 GRN
1 RED
4 BLU
5 YEL
6 BLK
1 RED
2 GRN
3 GRN /YEL
6 PUR
5 YEL
4 BLU
1 RED
2 GRN
3 GRY
Harness
232105
Harness
232106
GRN/YEL
ORG
BLU
RED
YEL
PUR
GRN
BRN
GRY
WHY
ORG
BLU
Plug in Hand Control
in Place of Receiver on
Flatbed Valve Harness
232098
RF
RECEIVER
ORG
BLU
YEL
GRN
BRN
PUR
RED
GRN / YEL
GRY
WHT
BLK
E
C
GROUND
8/17/2017

150044 REV:

HAND CONTROL & CABLE: 2 BANK

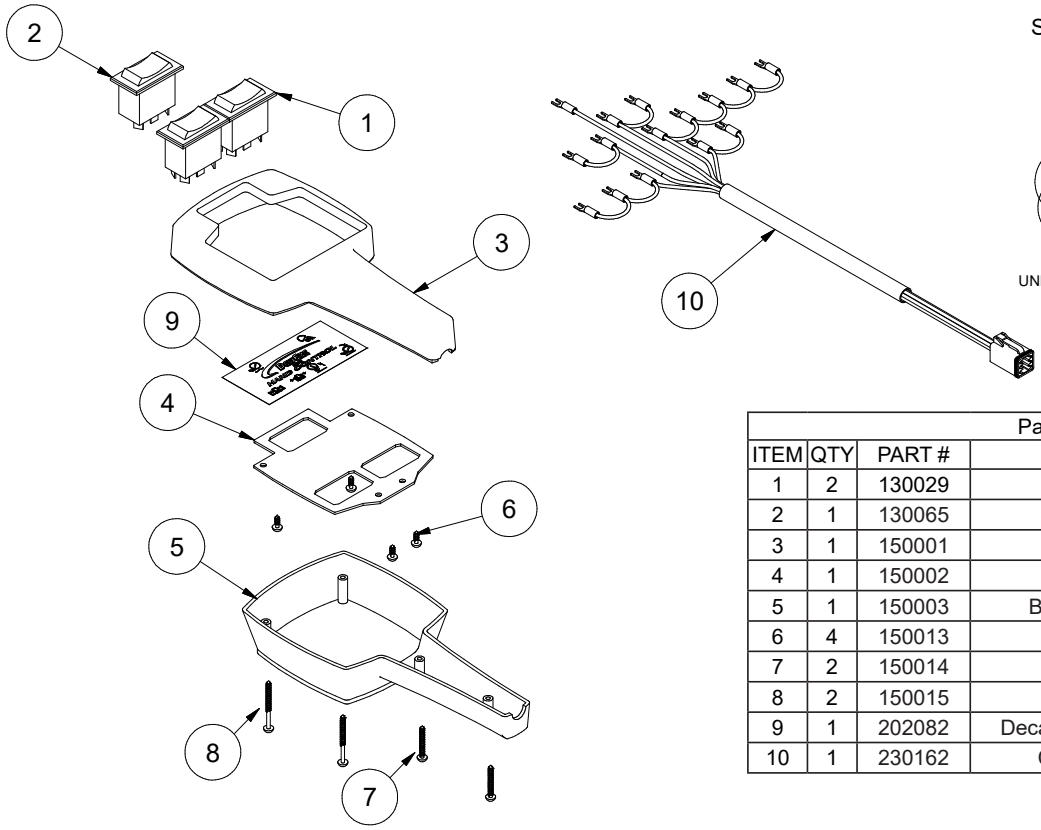

Wiring Diagram
Switches Shown From Back Side

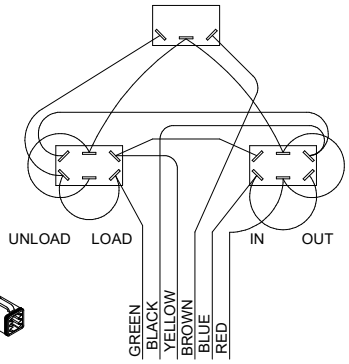

Parts List Kit: 150044

ITEM	QTY	PART #	DESCRIPTION
1	2	130029	Switch, Rocker, DPDT
2	1	130065	Switch, Rocker, On-Off-(On)
3	1	150001	Top Housing, Hand Control
4	1	150002	Switch Plate, Hand Control
5	1	150003	Bottom Housing, Hand Control
6	4	150013	Screw, #6 X 1/4 Type F
7	2	150014	Screw, #6 X 1 Sheetmetal
8	2	150015	Screw, #6 X 1.5 Sheetmetal
9	1	202082	Decal, Hand Control, 2 Bank, Gen III
10	1	230162	Cable, Hand Control, 2 Bank

150045 REV:

HAND CONTROL & CABLE: 3 BANK

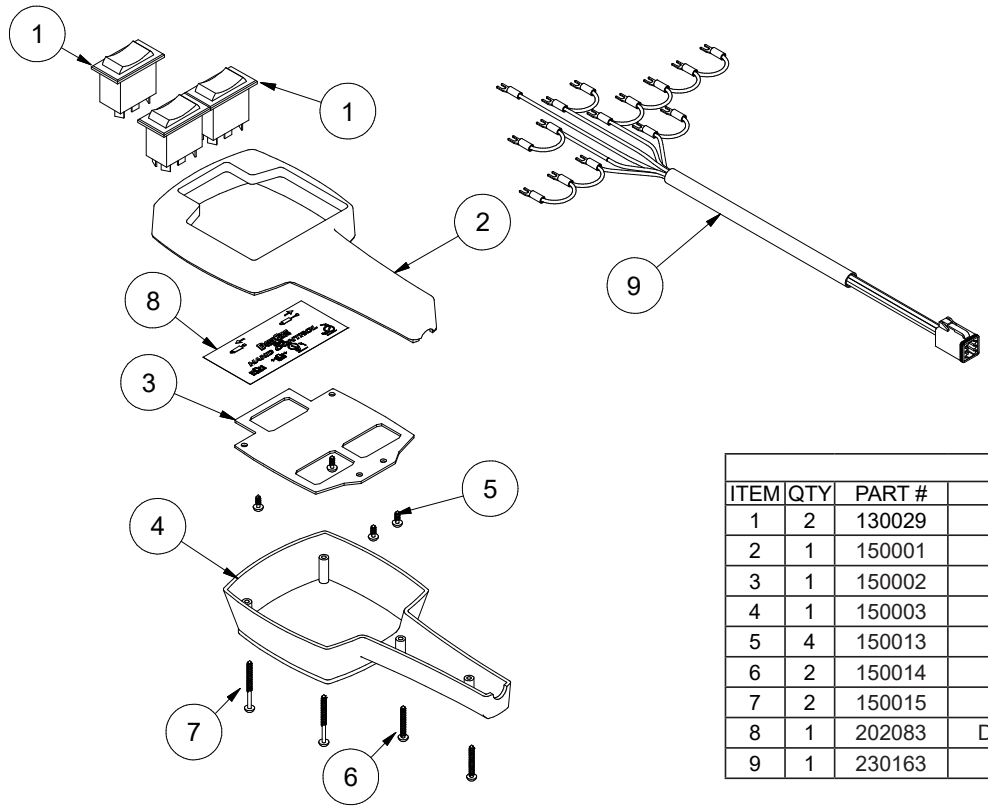

Wiring Diagram
Switches Shown From Back Side

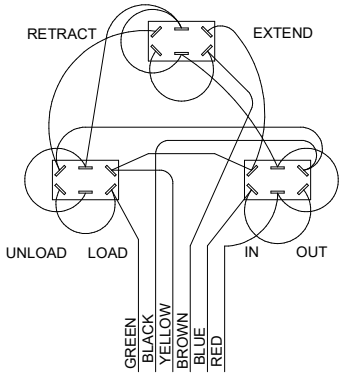

Parts List Kit: 150045

ITEM	QTY	PART #	DESCRIPTION
1	2	130029	Switch, Rocker, DPDT
2	1	150001	Top Housing, Hand Control
3	1	150002	Switch Plate, Hand Control
4	1	150003	Bottom Housing, Hand Control
5	4	150013	Screw, #6 X 1/4 Type F
6	2	150014	Screw, #6 X 1 Sheetmetal
7	2	150015	Screw, #6 X 1.5 Sheetmetal
8	1	202083	Decal, Hand Control, 3 Bank, Gen III
9	1	230163	Cable, Hand Control, 3 Bank

Lights & Harness

For S/N's after 12A01
Thru June 2018

Parts List			
ITEM	QTY	PART #	DESCRIPTION
1	4	230135	GROMMET, 2"
2	8	232060	LIGHT, GROMMET OVAL
3	6	232070	LIGHT, OVAL LED, S/T/T
4	2	232071	LIGHT, OVAL LED, BACK-UP
5	2	232072	LIGHT, 2" ROUND LED, AMBER
6	2	232073	LIGHT, 2" ROUND LED, RED
7	3	232091	LIGHT, 3/4" ROUND, LED, RED
8	2	235016	LIGHT, LICENSE PLATE, LED W/.180 BULLETS

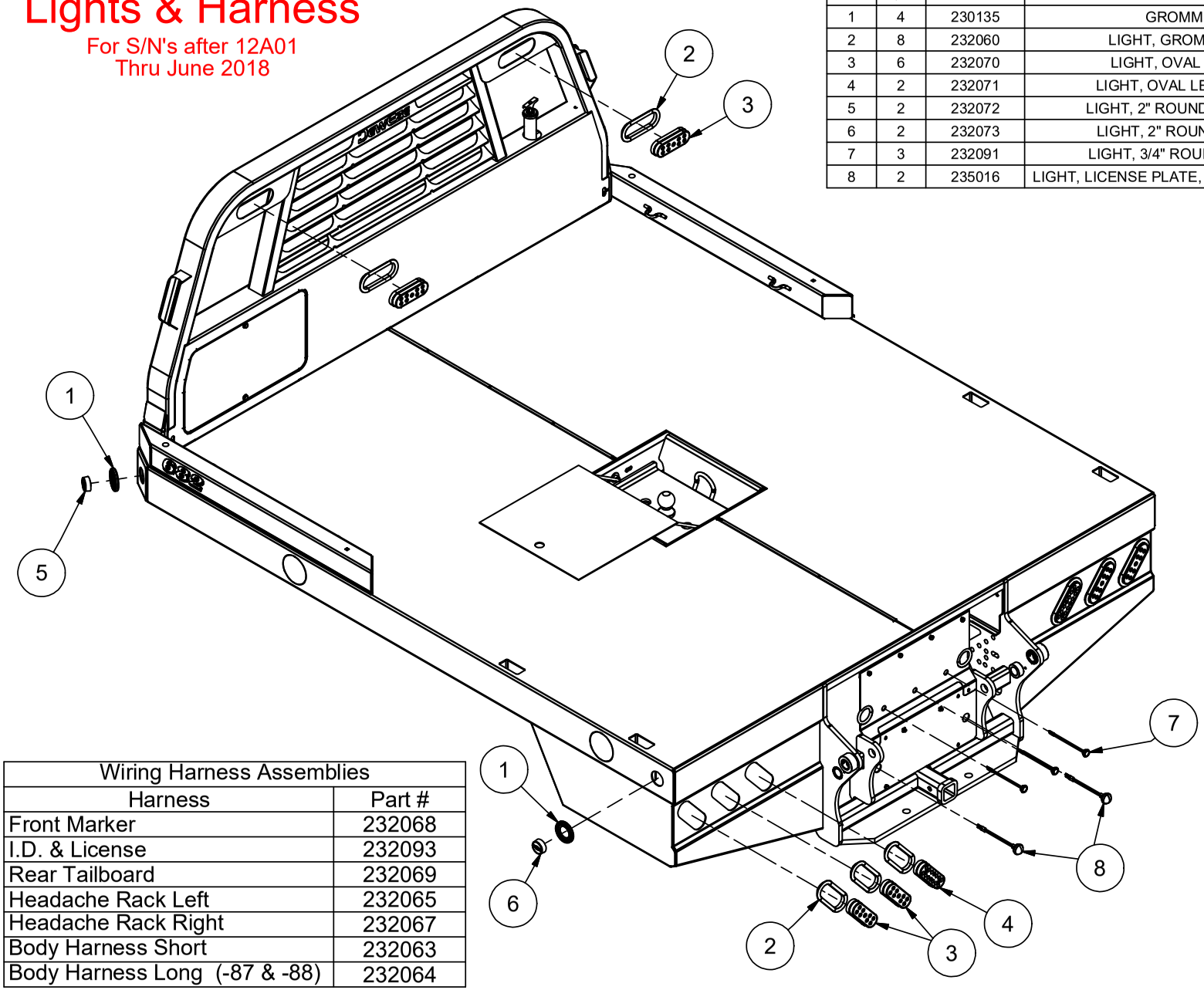

Wiring Harness Assemblies	
Harness	Part #
Front Marker	232068
I.D. & License	232093
Rear Tailboard	232069
Headache Rack Left	232065
Headache Rack Right	232067
Body Harness Short	232063
Body Harness Long (-87 & -88)	232064

9/18/2014

Lights & Harness

For S/N's after June 2018

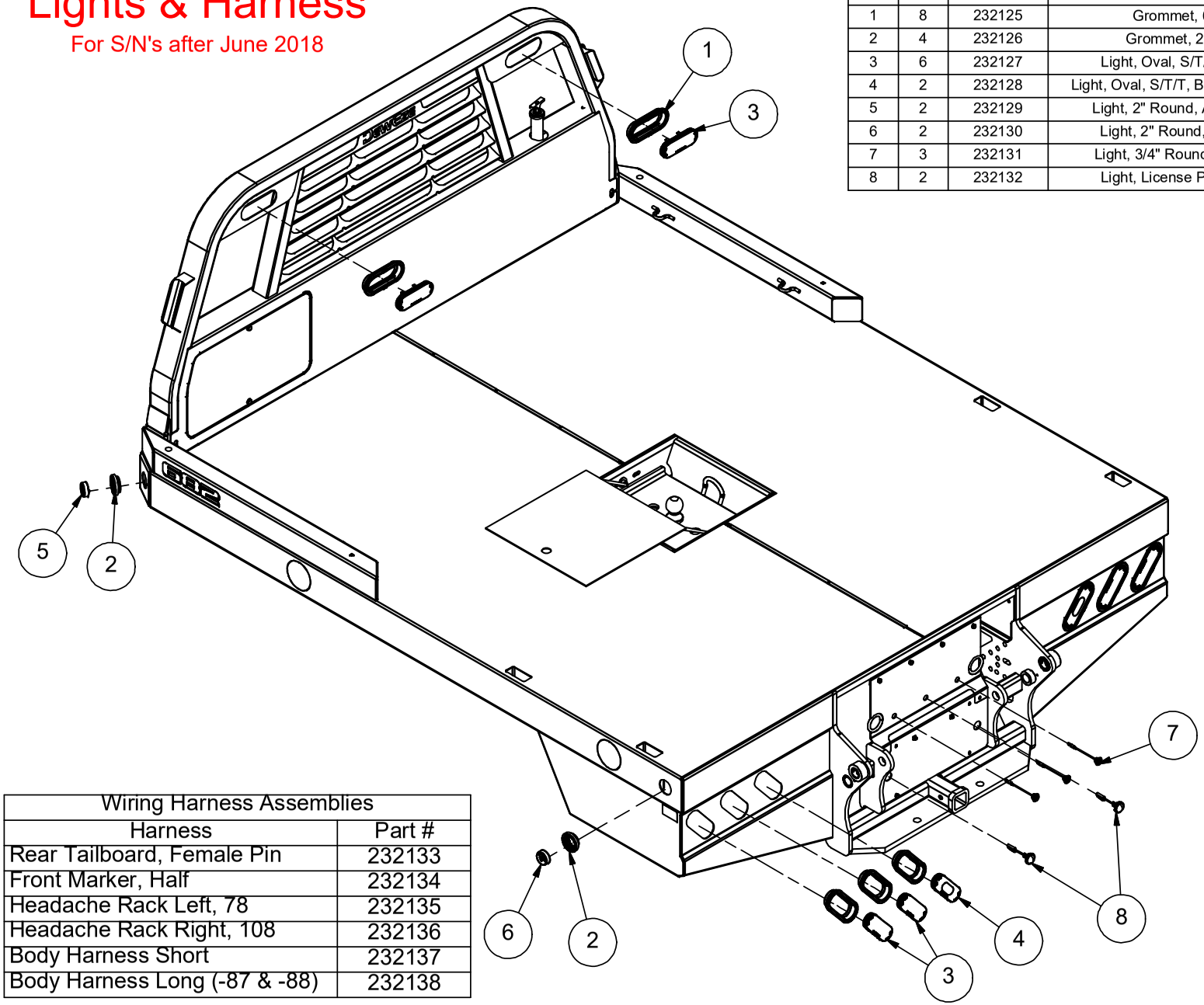

Parts List			
ITEM	QTY	PART #	DESCRIPTION
1	8	232125	Grommet, 6" Oval, Grote
2	4	232126	Grommet, 2" Round, Grote
3	6	232127	Light, Oval, S/T/T, Male Pin, Grote
4	2	232128	Light, Oval, S/T/T, BackUp, Male Pin, Grote
5	2	232129	Light, 2" Round, Amber, Grote 47113
6	2	232130	Light, 2" Round, Red, Grote 47112
7	3	232131	Light, 3/4" Round, Red, Grote 49332
8	2	232132	Light, License Plate, w/Plug, Grote

Wiring Harness Assemblies	
Harness	Part #
Rear Tailboard, Female Pin	232133
Front Marker, Half	232134
Headache Rack Left, 78	232135
Headache Rack Right, 108	232136
Body Harness Short	232137
Body Harness Long (-87 & -88)	232138

6/8/2018

Decals
Safety & Operation

PART #	QTY	DESCRIPTION
200010	4	DANGER DECAL, HORIZONTAL
202114	1	BALE PIK-UP, SCRIPT, WARM SILVER
200144	2	DANGER DECAL, VERTICAL
202118	1	DEWEZE, OUTLINE, WARM SILVER
200190	6	REFLECTIVE DECAL
202003	1	DECAL, SWITCH IDENTIFICATION
202052	1	DECAL, DOUBLE POPPET VALVE
202053	1	DECAL, WIRING DIAGRAM, KAR-TECH REMOTE
202054	1	DECAL, 3rd BANK OPTION, KAR-TECH REMOTE
300002	1	FEMA DECAL

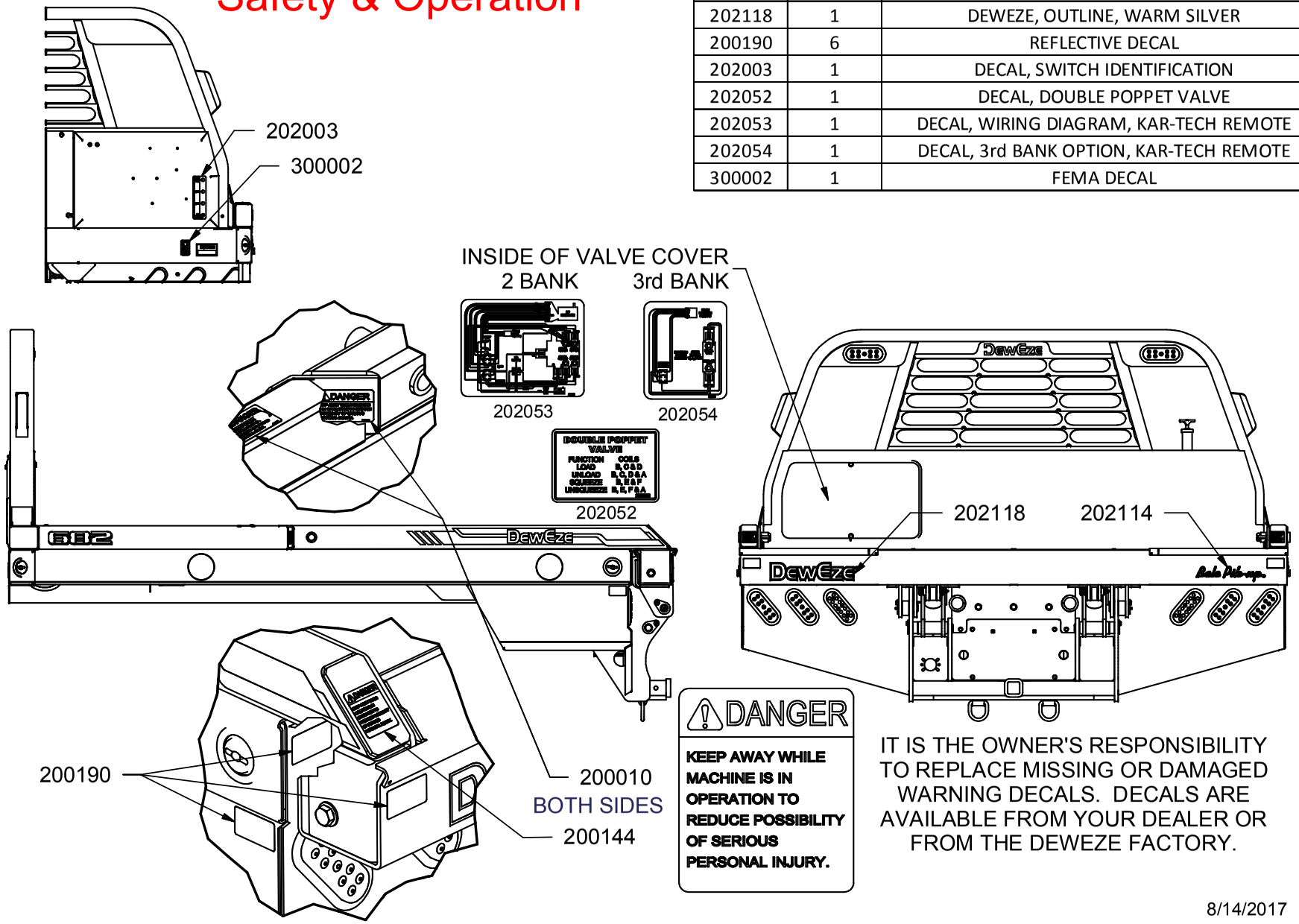

DANGER

KEEP AWAY WHILE MACHINE IS IN OPERATION TO REDUCE POSSIBILITY OF SERIOUS PERSONAL INJURY.

IT IS THE OWNER'S RESPONSIBILITY TO REPLACE MISSING OR DAMAGED WARNING DECALS. DECALS ARE AVAILABLE FROM YOUR DEALER OR FROM THE DEWEZE FACTORY.

8/14/2017

600 & 700 Series Decals

* Model # Decals Must be Ordered Seperately

Model # Decals		
Left & Right	Part #	Qty
670	202094	2
671	202129	2
675	202095	2
676	202096	2
677	202097	2
679	202098	2
682	202099	2
684	202100	2
687	202101	2
688	202102	2
770	202103	2
778	202105	2
776	202104	2
782	202106	2
784	202107	2
787	202108	2
788	202109	2

Decal Kit, 6-700 Series Part # 205133		
Part #	Qty	Description
200010	4	Decal, Danger Red On White
202114	1	Decal, Bale Pik-up Script, Warm Silver
200144	2	Decal, Danger Vertical
202118	1	Decal, Deweze Outline, Warm Silver
200190	6	Decal, Red Reflector, Rectangle
202093	34 ft.	Decal, Pin Stripe, Warm Silver
202111	1	Decal, Squeeze Arm, Left
202112	1	Decal, Squeeze Arm, Right
400014	2	Decal, Shield Removed

XRM
202115

SSQ
202006

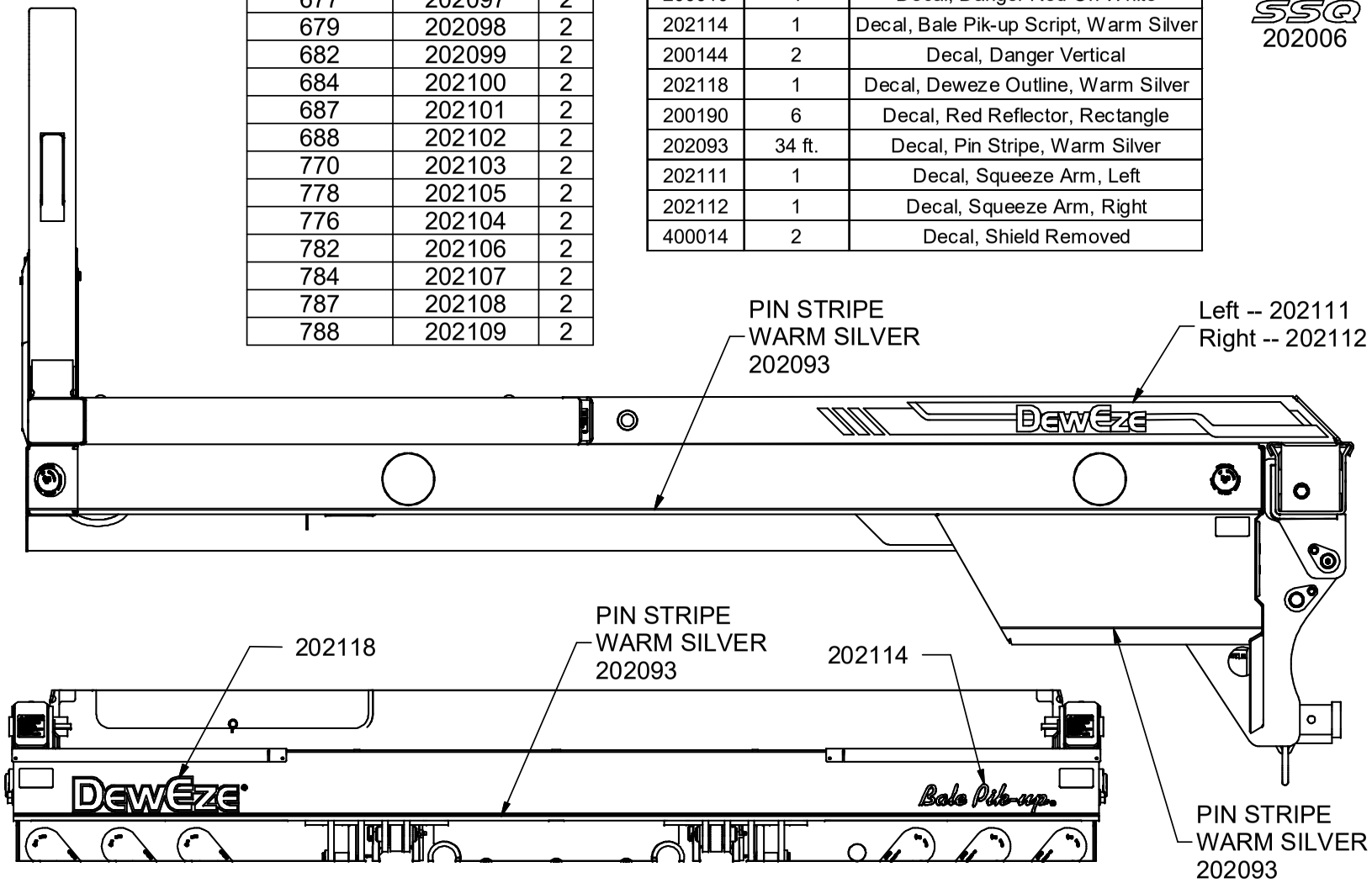

12/7/2021

Flatbed Accessories
Swingout Lights

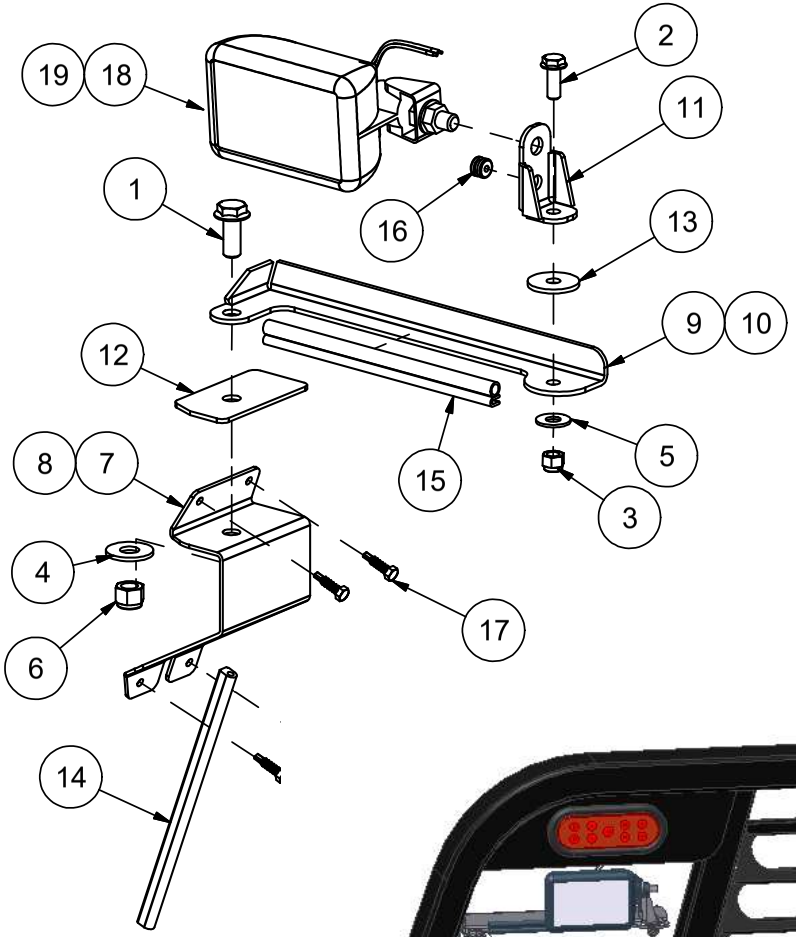

Swing Light Kit, Part# 205013			
ITEM	QTY	PART #	DESCRIPTION
1	2	110001	BOLT, 1/2-13 X 1.25, WIZ FLANGE
2	2	110440	BOLT, 3/8-16 X 1, WIZ FLANGE
3	2	110618	NUT, 3/8-16 LOCK NYLON INSERT
4	2	110658	WASHER, 1/2" FLAT STANDARD
5	2	110676	WASHER, 3/8" FLAT STANDARD
6	2	111034	NUT, 1/2-13 LOCK NYLON
7	1	211741	SWING LIGHT MOUNT, LEFT
8	1	211742	SWING LIGHT MOUNT, RIGHT
9	1	211743	SWING LIGHT ARM, LEFT
10	1	211744	SWING LIGHT ARM, RIGHT
11	2	211745	LIGHT MOUNT
12	2	211746	FRICTION MOUNTING PLATE
13	2	211747	FRICTION WASHER 1.5"
14	2	211748	SWING LIGHT, RUBBER SEAL
15	2	211749	SWINGLIGHT EDGE TRIM
16	2	230146	GROMMET, 3/16 ID X 9/16 OD
17	8	710586	SCREW, 1/4 X 1 TEK SELF-TAP
18	1	830031	WORK LIGHT, LEFT
19	1	830035	WORK LIGHT, RIGHT
			NOT SHOWN
	20'	130004	WIRE, 14GA BLACK
	2	130023	TERMINAL, RING, 14-16GA 3/8"
	1	132027	Switch, Spst, Toggle .250 Tab
	1	132035	Boot, 1/2 Toogle Switch Seal
	2	730008	TERMINAL, BUTT CONNECTOR, 14-16
	2	730010	TERMINAL, RING, 14-16GA. 10-32

8/29/2013

Flatbed Accessories
Cargo Lights

Cargo Light Assy, Part# 211391			
ITEM	QTY	PART #	DESCRIPTION
1	1	211389	LIGHT BRACKET, RIGHT
2	1	211390	LIGHT BRACKET, LEFT
3	1	230146	GROMMET, 3/16 ID X 9/16 OD
4	4	710587	SCREW, 3/16 X .75 TEK SELF-TAP
5	1	830031	WORK LIGHT, LEFT
6	1	830035	WORK LIGHT, RIGHT
NOT SHOWN			
	20	130004	Wire, 14ga, Black
	1	130010	Terminal, Scotch Lock
	1	132027	Switch, Spst, Toggle .250 Tab
	1	132035	Boot, 1/2 Toogle Switch Seal
	3	530071	Terminal, Ring, 10-12 Ga, 5/16
	3	730008	Terminal, Butt Connector,14-16
	2	730010	Terminal, Ring, 14-16ga, 10-32

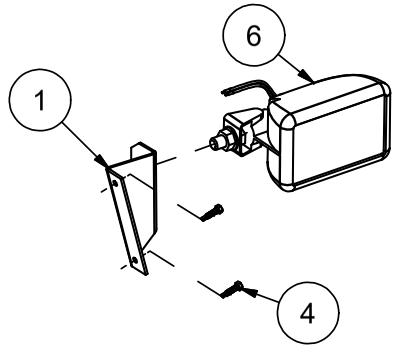

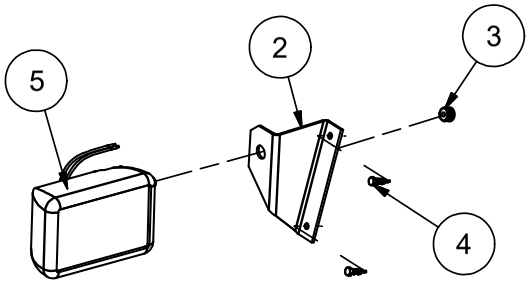

8/29/2013

Flatbed Accessories
Swingout Lights
LED

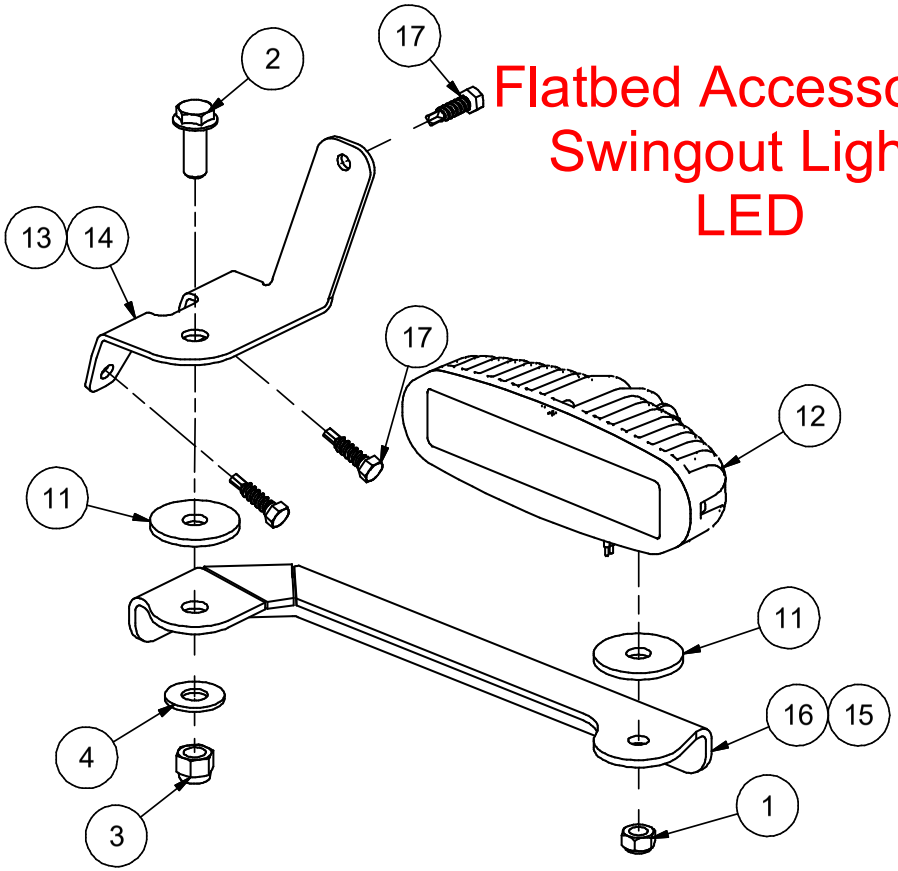

Swingout Light Kit, Part# 205114			
ITEM	QTY	PART #	DESCRIPTION
1	2	110230	NUT, M8 X 1.25, LOCK NYLON
2	2	110440	BOLT, 3/8-16 X 1, WIZ FLANGE
3	2	110618	NUT, 3/8-16 LOCK NYLON INSERT
4	2	110676	WASHER, 3/8" FLAT STANDARD
5	5 ft	130004	Wire, 14ga Black
6	1	132035	SWITCH BOOT
7	1	132135	Switch, Toggle, SPST, On-Off
8	3	132147	Terminal, Butt Connector, 16-14, Heat Shrink
9	2	132148	Terminal, Ring, 16-14, 1/4", Heat Shrink
10	1	132149	Terminal, Multi-Wire Butt Connector, Heat Shrink
11	4	211747	FRICTION WASHER 1.5"
12	2	232139	Light, LED, 5" Rect, Flood, W/Connector
13	1	260622	Bracket, Swing Light, Base, Right
14	1	260623	Bracket, Swing Light, Base, Left
15	1	260624	Bracket, Swing Light, Arm, Right
16	1	260625	Bracket, Swing Light, Arm, Left
17	6	710586	SCREW, 1/4 X 1 TEK SELF-TAP

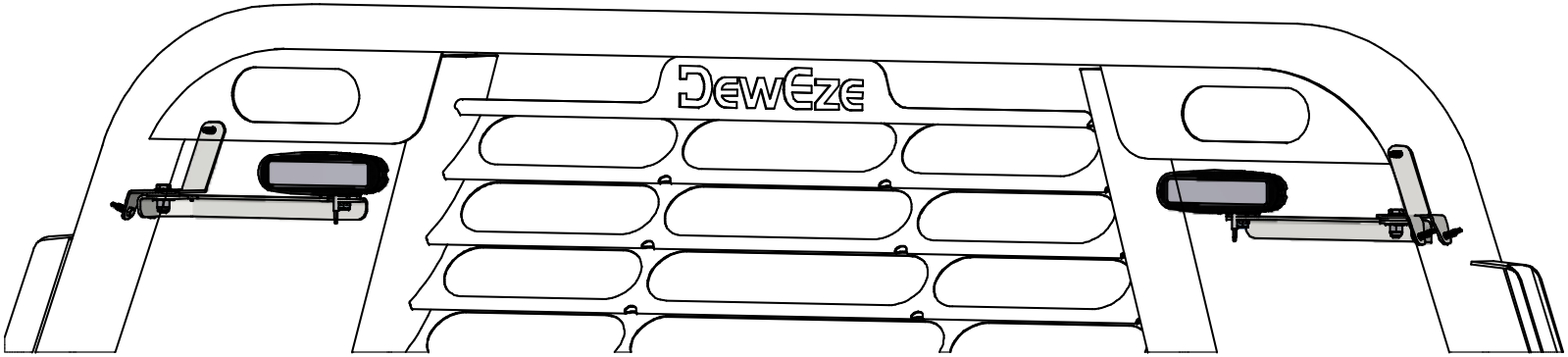

12/14/2018

Flatbed Accessories
Cargo Lights
LED

Cargo Light Kit, Part# 205113			
ITEM	QTY	PART #	DESCRIPTION
1	5 ft	130004	Wire, 14ga Black
2	1	132035	SWITCH BOOT
3	1	132135	Switch, Toggle, SPST, On-Off
4	3	132147	Terminal, Butt Connector, 16-14, Heat Shrink
5	2	132148	Terminal, Ring, 16-14, 1/4", Heat Shrink
6	1	132149	Terminal, Multi-Wire Butt Connector, Heat Shrink
7	2	232139	Light, LED, 5" Rect, Flood, W/Connector
8	2	260626	Bracket, Cargo Light
9	4	710586	SCREW, 1/4 X 1 TEK SELF-TAP

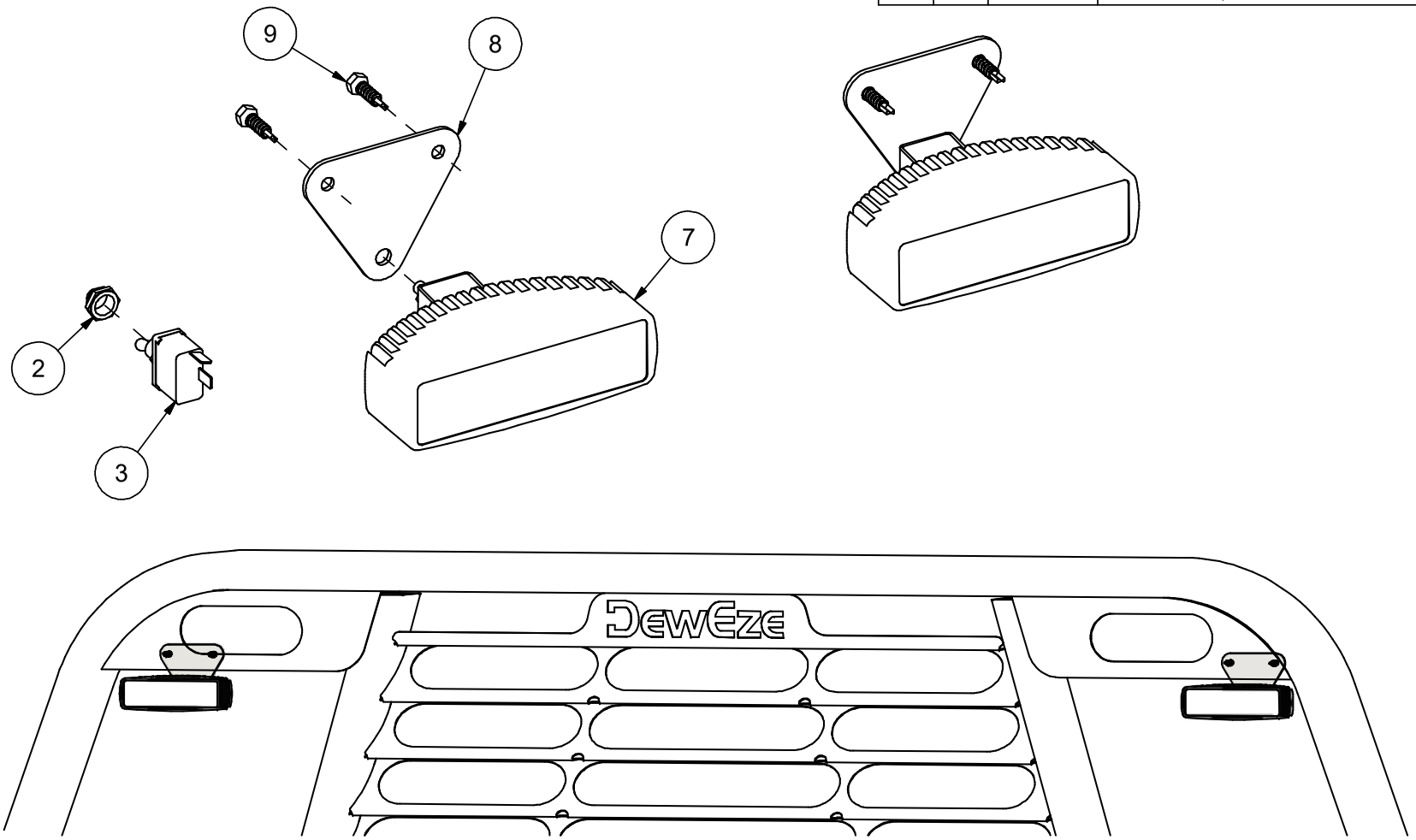

10/2/2018

HARNESS ADAPTERS: OEM TO DEWEZE

ITEM		DESCRIPTION	YEAR
232235	FORD	Harness Adapter Ford BTO	2023 - 2024
232235		Harness Adapter Ford BTO	2020 - 2022
232119		Harness Adapter Ford BTO	2017 - 2019
232118		Harness Adapter Ford BTO	2011 - 2016
232046		Harness Adapter Ford BTO	2000 - 2010
232192		Harness, Ford with BLIS (Add-on Harness)	-
232047		Harness Adapter Ford CC	2000 - 2024
232237	CHEVY	Harness Adapter Chevy / GMC BTO	2024
232181		Harness Adapter Chevy / GMC BTO	2020 - 2023
232117		Harness Adapter Chevy / GMC CC & BTO	2016 - 2019
232116		Harness Adapter Chevy / GMC CC & BTO	2015
232050		Harness Adapter Chevy / GMC BTO	2002 - 2014
232050		Harness Adapter Chevy / GMC CC	2002 - 2014
232186		Harness Adapter Chevy / GMC CC	2020 - 2023
232194	DODGE	Harness Adapter Dodge / Ram BTO Incandescent	2000 - 2023
232233		Harness Adapter Dodge / Ram BTO LED Add (x2) to the 232194	2000 - 2023
232059		Harness Adapter Dodge / Ram CC	2007 - 2024
232049		Harness Generic, Flatbed to Blunt Cut	-
232079		LED Load Equalizer (Maxxima)(PL3 Connector)(Yellow Male/Black Female)	-
232143		LED Load Equalizer (Grote Connector) (Round)(Blue Male/Blue Female)	-

REAR VIEW CAMERA MOUNTING KITS *

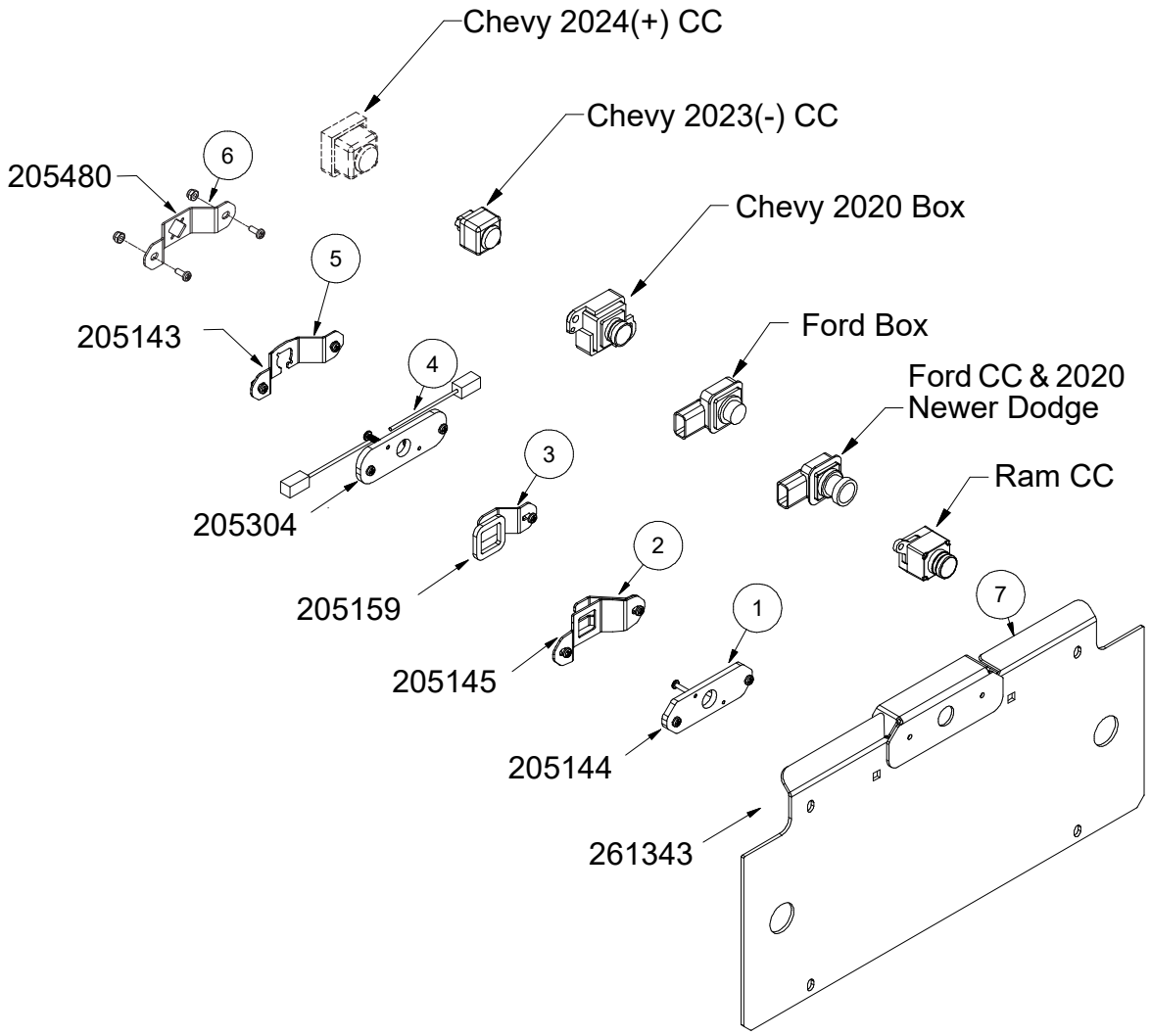

***Mount Disclaimer:** These mounting kits were designed for the most common mounting-to-camera. Manufacturers change camera styles & mountings even within the same year. Use best practices to modify if need be.

***Installer note:** DewEze does not engineer wiring nor harnesses for the camera. It is the installers' responsibility to trace the OEM cable to re-attach.

Item	Qty	Part #	DESCRIPTION
1	1	205144	Dodge/Ram CC Camera Mount Kit
2	1	205145	Ford Camera & Dodge 2020+ Mount Kit
3	1	205159	Ford Box Take-Off Camera Mount Kit
4	1	205304	Chevy/ GM 2020 Box Take-Off Camera Mount Kit
5	1	205143	Chevy/GM CC 2023- Camera Mount Kit
6	1	205480	Chevy/GM CC 2024+ Camera Mount Kit
7	1	261343	Camera Mount Weldment

BED MOUNTING KITS *

***Installer note:** KIts were designed to match specific bed styles to a model of OEM truck. Use best practices & measurements for fitment, or choose the Yellow Bag generic kit.

MAKE	PART #	YEAR	DESCRIPTION
FORD	205112	2017+	Ford Box Delete 671, 676, 776
	205084	1998-2016	Ford Box Delete 676, 776
	205064	2012-2016	Ford Box Delete 670, 770
	205036	1998-2011	Ford Box Delete “Super Duty” 670, 770
	205041	Pre-1997	Ford Box Delete “Non Super Duty" 670
	205111	2017+	Ford Cab-Chassis 679, 684, 784
	205078	1999-2016	Ford Cab-Chassis 679, 684, 784
	205149	2017+	Ford Cab-Chassis 688, 788
	205080	1999-2016	Ford Cab-Chassis 688, 788
CHEVY/ GM	205303	2020+	Chevrolet Box Delete, 671, 676, 776
	205063	2011-2019	Chevrolet Box Delete 670
	205038	2000-2010	Chevrolet Box Delete 670
	205085	2011-2019	Chevrolet Box Delete 676, 776
	205086	2000-2010	Chevrolet Box Delete 676, 776
	205047	2011+	Chevrolet Cab-Chassis 684, 784
	205051	2000-2010	Chevrolet Cab-Chassis 684, 784
	205281	2019+	Chevrolet (4500-5500) Cab-Chassis 684, 784
	205069	2011+	Chevrolet Cab-Chassis 688, 788
	205424	2019+	Chevrolet (4500-5500) Cab-Chassis 688, 788
DODGE/ RAM	205185	2019+	Dodge Box Delete 670, 770
	205093	2014-2018	Dodge Box Delete 670, 770
	205469	2003-2013	Dodge Box Delete 670, 770
	205054	1994-2002	Dodge Box Delete 670, 770
	205173	2019+	Dodge (3500) Box Delete 676, 776
	205121	2014-2018	Dodge (3500) Box Delete 676, 776
	205087	2014+	Dodge (2500) Box Delete 676, 776
	205082	2003-2013	Dodge Box Delete 676, 776
	205089	1994-2002	Dodge Box Delete 676, 776
	205039	2007+	Dodge Cab-Chassis 679, 684, 784
	205065	2007+	Dodge Cab-Chassis 688, 788
MISC.	205029	Yellow Bag & Contents (applicable to older truck models not listed above)	

Flatbed Accessories
30" Toolbox
Fender Skirts

Toolbox Complete W/Step, Part# 205011			
ITEM	QTY	PART #	DESCRIPTION
1	1	211109	STEP, TOOLBOX
2	.7 ft	100449	Traction Pad
3	1	202001	DECAL, CHIP GUARD
4	1	211684	SHIELD, TOP & SIDE
5	1	205012	BOLT PACKAGE
	10	110258	NUT, 5/16-18, CAGE TINNERMAN
	12	110444	BOLT, 5/16-18 X 0.75, WIZ FLANGE
	4	110437	BOLT, 3/8-16 X 0.75, WIZ FLANGE
	4	110645	NUT, 3/8-16 WIZ FLANGE
	4	110676	WASHER, 3/8" FLAT STANDARD
	2	110606	NUT, 5/16-18 WIZ FLANGE
	4	110665	WASHER, 5/16" FLAT STANDARD
	8	110049	WASHER, 5/16" X 1 1/2 FENDER

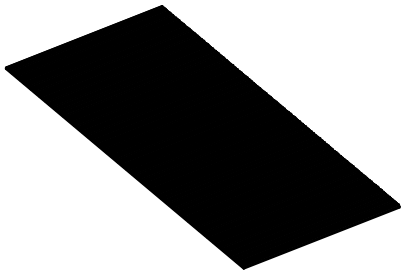

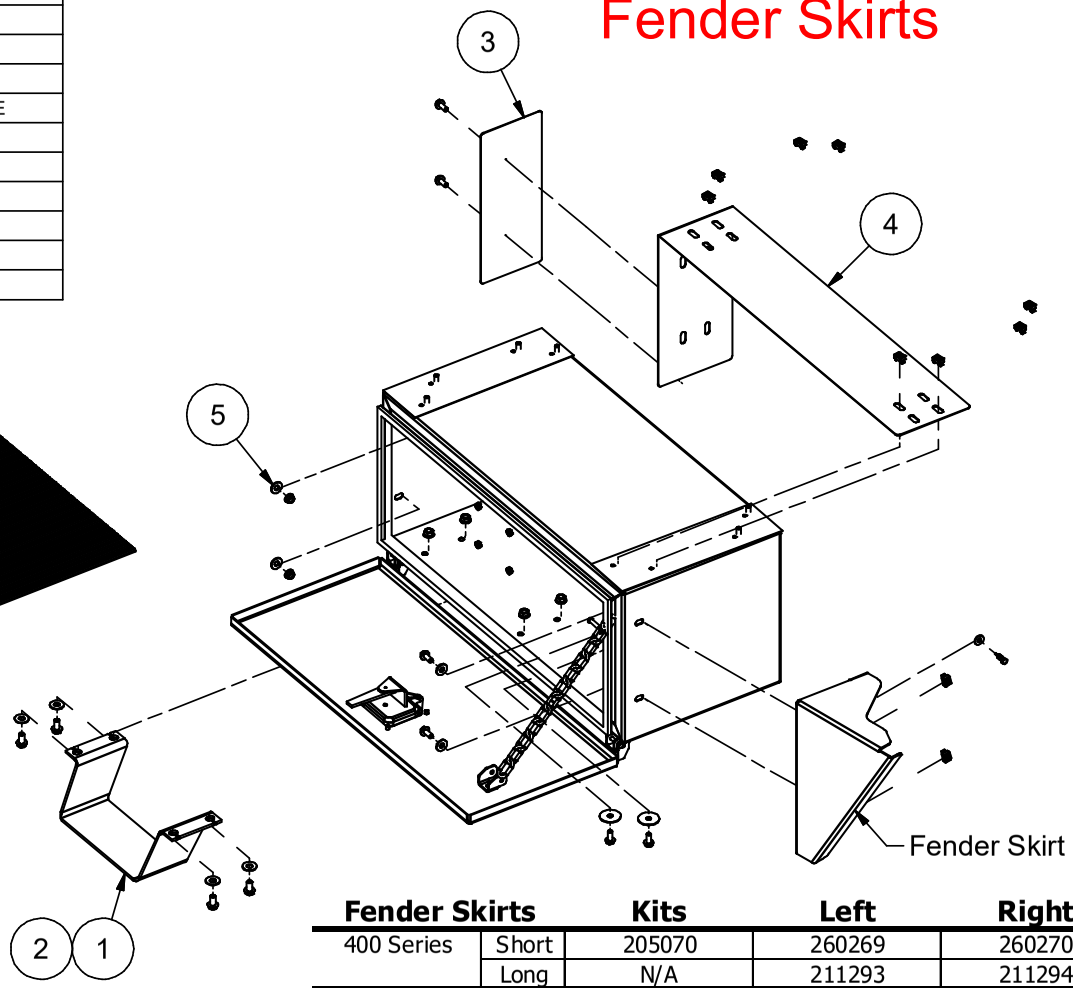

Service Parts for Toolbox		
QTY	PART #	DESCRIPTION
4	110174	NUT, 1/4-20 LOCK 2-WAY
3	112011	PUSH NUT, WASHER CAP STYLE
3	112095	CLEVIS PIN, STD ZP 1/4 X 1 5/8
1	202010	SEAL, TOOLBOX LID (TRIM-LOK X-2897)
1	211119	TOOL BOX MAT
2	212003	Gasket, Toolbox Mount use DK111 Foam
1	212017	Latch, Toolbox w/Studs, Key & Gasket
1	212015	Gasket, Toolbox Latch
1	212016	Key, Toolbox Latch
1	205014	Door, Toolbox, Service Part

Fender Skirts		Kits	Left	Right
400 Series	Short	205070	260269	260270
	Long	N/A	211293	211294
500 Series	Short	205071	260271	260272
	Long	N/A	211587	211588
600 Series	Short	205070	260269	260270
	Long	205072	260273	260274
700 Series	Short	205071	260271	260272
	Long	205073	260275	260276

7/19/2023

20" TOOLBOX W/STEP 205030			
ITEM	QTY	PART #	DESCRIPTION
1	1	100449	Traction Pad
2	4	110174	Nut, 1/4-20 Lock 2-Way
3	1	205012	Bolt Package
3.1	8	110049	Washer, 5/16 X 1.50 Fender
3.2	12	110258	Nut, 5/16-18, Cage Tinnerman
3.3	4	110437	Bolt, 3/8-16 X 0.75, Wiz Flange
3.4	14	110444	Bolt, 5/16-18 X 0.75, Wiz Flange
3.5	2	110606	Nut, 5/16-18 Wiz Flange
3.6	4	110645	Nut, 3/8-16 Wiz Flange
3.7	4	110665	Washer, 5/16" Flat Standard
3.8	4	110676	Washer, 3/8" Flat Standard
4	1	202001	Decal, Chip Guard
5	1	205489	Toolbox Lid 20"
5.1	3	112011	Push Nut, Washer Cap Style
5.2	3	112095	Clevis Pin, Std Zp 1/4 X 1 5/8
5.3	1	202010	Seal, Toolbox Lid (Trim-Lok X-2897)
5.4	1	215133	Toolbox Door & Hinge Weldment 20"
5.5	2	270139	Toolbox Door Hinge, Inner Half
6	1	211109	Step, Toolbox
7	1	211248	Toolbox Mat 20"
8	1	211593	Toolbox Chip Guard 20"
9	2	212003	Gasket, Toolbox Mount
10	1	212017	Latch, Toolbox W/Studs, Key & Gasket
10.1	1	212015	Gasket, Toolbox Latch
11	1	215131	Toolbox & Hinge Weldment 20"

Flatbed Accessories
20" Toolbox

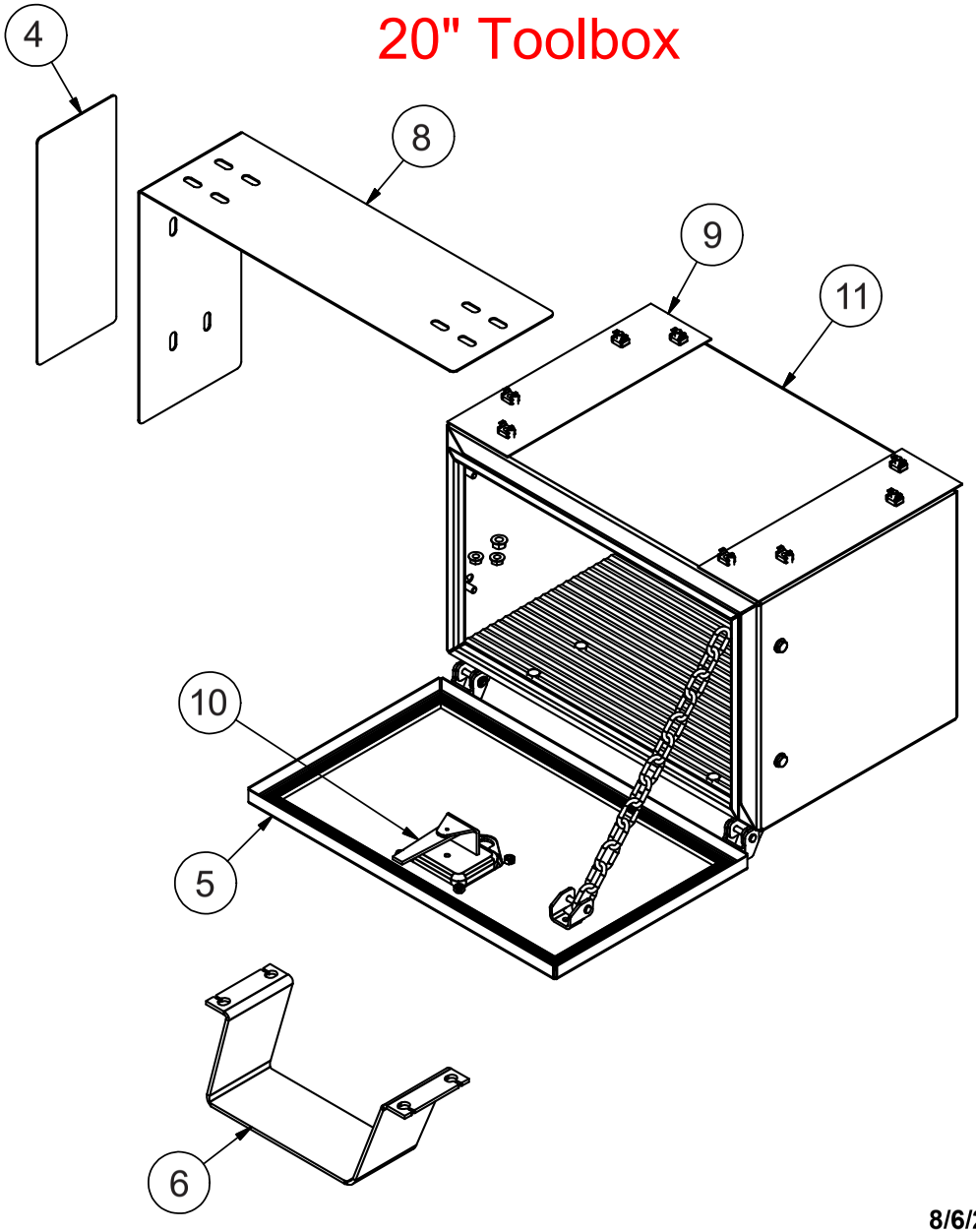

8/6/2025

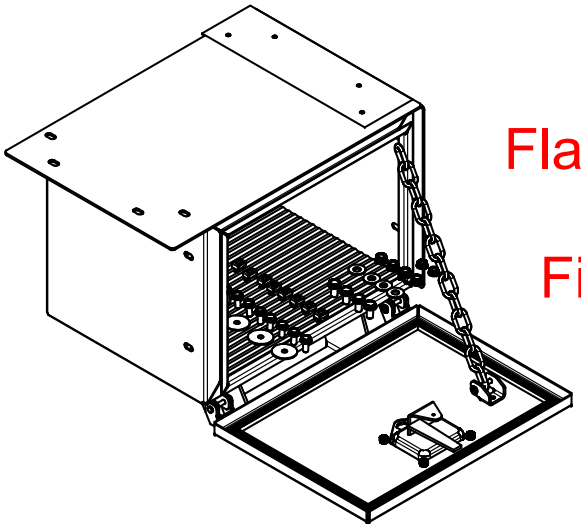

Flatbed Accessories
17" Toolbox
Fits 20" Mounting

Toolbox Complete W/Step, 17" Right (205138)			
ITEM	QTY	PART #	DESCRIPTION
1	4	110174	NUT, 1/4-20 LOCK 2-WAY
2	3	112011	PUSH NUT, WASHER CAP STYLE
3	3	112095	CLEVIS PIN, STD ZP 1/4 X 1 5/8
4	1	202001	DECAL, CHIP GUARD
5	1	202010	SEAL, TOOLBOX LID (TRIM-LOK X-2897)
6	1	205012	BOLT PACKAGE
	8	110049	WASHER, 5/16 X 1.50 FENDER
	12	110258	NUT, 5/16-18, CAGE TINNERMAN
	4	110437	BOLT, 3/8-16 X 0.75, WIZ FLANGE
	14	110444	BOLT, 5/16-18 X 0.75, WIZ FLANGE
	2	110606	NUT, 5/16-18 WIZ FLANGE
	4	110645	NUT, 3/8-16 WIZ FLANGE
	4	110665	WASHER, 5/16" FLAT STANDARD
	4	110676	WASHER, 3/8" FLAT STANDARD
7	1	211109	STEP, TOOLBOX
	.7 ft	100449	Traction Pad
8	1	212003	GASKET, TOOLBOX MOUNT
9	1	212017	Latch, Toolbox w/Studs, Key & Gasket
	1	212015	Gasket, Toolbox Latch
10	1	215213	WELDMENT, TOOLBOX DOOR & HINGE, 17"
11	1	215394	Weldment, 17" Right, Toolbox & Hinge
12	1	260719	Toolbox Mat, 17"

Toolbox Complete W/Step, 17" Left (205139)			
ITEM	QTY	PART #	DESCRIPTION
1	4	110174	NUT, 1/4-20 LOCK 2-WAY
2	3	112011	PUSH NUT, WASHER CAP STYLE
3	3	112095	CLEVIS PIN, STD ZP 1/4 X 1 5/8
4	1	202001	DECAL, CHIP GUARD
5	1	202010	SEAL, TOOLBOX LID (TRIM-LOK X-2897)
6	1	205012	BOLT PACKAGE
	8	110049	WASHER, 5/16 X 1.50 FENDER
	12	110258	NUT, 5/16-18, CAGE TINNERMAN
	4	110437	BOLT, 3/8-16 X 0.75, WIZ FLANGE
	14	110444	BOLT, 5/16-18 X 0.75, WIZ FLANGE
	2	110606	NUT, 5/16-18 WIZ FLANGE
	4	110645	NUT, 3/8-16 WIZ FLANGE
	4	110665	WASHER, 5/16" FLAT STANDARD
	4	110676	WASHER, 3/8" FLAT STANDARD
7	1	211109	STEP, TOOLBOX
	.7 ft	100449	Traction Pad
8	1	212003	GASKET, TOOLBOX MOUNT
9	1	212017	Latch, Toolbox w/Studs, Key & Gasket
	1	212015	Gasket, Toolbox Latch
10	1	215213	WELDMENT, TOOLBOX DOOR & HINGE, 17"
11	1	215393	Weldment, 17" Left, Toolbox & Hinge
12	1	260719	Toolbox Mat, 17"

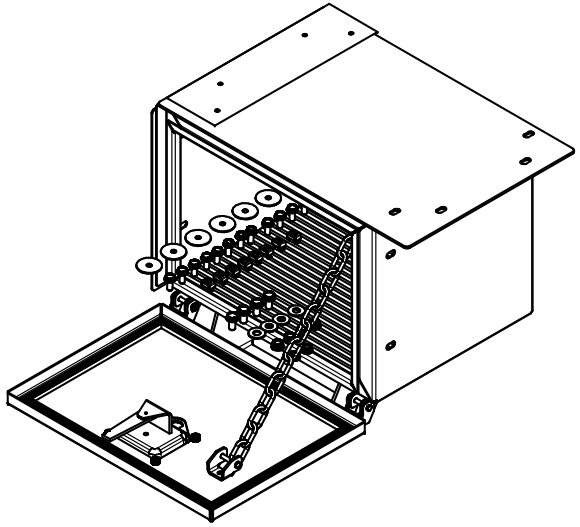

11/7/2017

Flatbed Accessories
12" Toolbox
Fits 20" Mounting

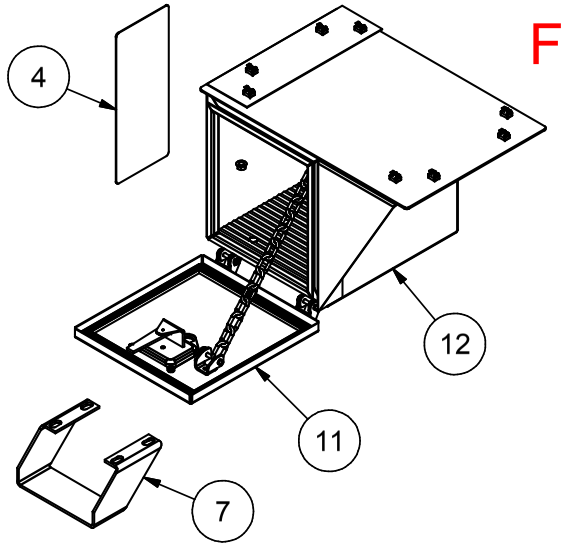

Toolbox Complete W/Step, 12" Right (205032)			
ITEM	QTY	PART #	DESCRIPTION
1	4	110174	NUT, 1/4-20 LOCK 2-WAY
2	3	112011	PUSH NUT, WASHER CAP STYLE
3	3	112095	CLEVIS PIN, STD ZP 1/4 X 1 5/8
4	1	202001	DECAL, CHIP GUARD
5	1	202010	SEAL, TOOLBOX LID (TRIM-LOK X-2897)
6	1	205012	BOLT PACKAGE
	8	110049	WASHER, 5/16 X 1.50 FENDER
	12	110258	NUT, 5/16-18, CAGE TINNERMAN
	4	110437	BOLT, 3/8-16 X 0.75, WIZ FLANGE
	14	110444	BOLT, 5/16-18 X 0.75, WIZ FLANGE
	2	110606	NUT, 5/16-18 WIZ FLANGE
	4	110645	NUT, 3/8-16 WIZ FLANGE
	4	110665	WASHER, 5/16" FLAT STANDARD
	4	110676	WASHER, 3/8" FLAT STANDARD
7	1	210697	STEP TOOL BOX
	.5 ft	100449	Traction Pad
8	1	211871	TOOLBOX MAT 12"
9	1	212003	GASKET, TOOLBOX MOUNT
10	1	212017	Latch, Toolbox w/Studs, Key & Gasket
	1	212015	Gasket, Toolbox Latch
11	1	215136	TOOLBOX DOOR & HINGE WELDMENT 12"
12	1	215152	WELDMENT, TOOLBOX 12" W/SKIRT, RIGHT

Toolbox Complete W/Step, 12" Left (205033)			
ITEM	QTY	PART #	DESCRIPTION
1	4	110174	NUT, 1/4-20 LOCK 2-WAY
2	3	112011	PUSH NUT, WASHER CAP STYLE
3	3	112095	CLEVIS PIN, STD ZP 1/4 X 1 5/8
4	1	202001	DECAL, CHIP GUARD
5	1	202010	SEAL, TOOLBOX LID (TRIM-LOK X-2897)
6	1	205012	BOLT PACKAGE
	8	110049	WASHER, 5/16 X 1.50 FENDER
	12	110258	NUT, 5/16-18, CAGE TINNERMAN
	4	110437	BOLT, 3/8-16 X 0.75, WIZ FLANGE
	14	110444	BOLT, 5/16-18 X 0.75, WIZ FLANGE
	2	110606	NUT, 5/16-18 WIZ FLANGE
	4	110645	NUT, 3/8-16 WIZ FLANGE
	4	110665	WASHER, 5/16" FLAT STANDARD
	4	110676	WASHER, 3/8" FLAT STANDARD
7	1	210697	STEP TOOL BOX
	.5 ft	100449	Traction Pad
8	1	211871	TOOLBOX MAT 12"
9	1	212003	GASKET, TOOLBOX MOUNT
10	1	212017	Latch, Toolbox w/Studs, Key & Gasket
	1	212015	Gasket, Toolbox Latch
11	1	215136	TOOLBOX DOOR & HINGE WELDMENT 12"
12	1	215151	WELDMENT, TOOLBOX 12" W/SKIRT, LEFT

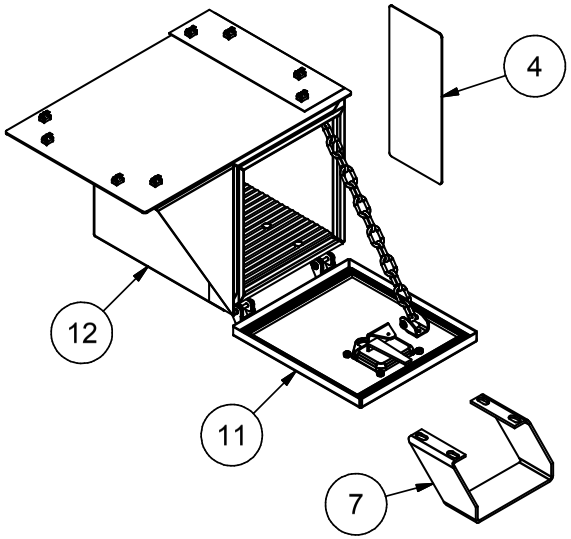

11/7/2017

Flatbed Accessories
770 Toolbox
Fits "770" only

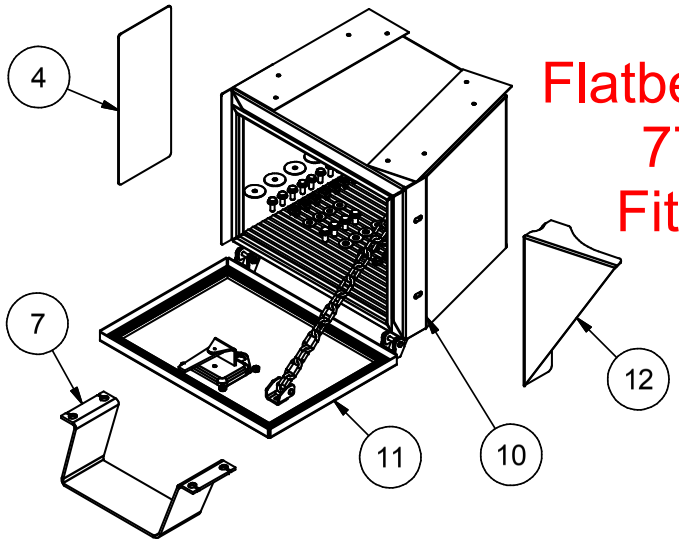

Toolbox Complete W/Step, 770 Right (205044)			
ITEM	QTY	PART #	DESCRIPTION
1	4	110174	NUT, 1/4-20 LOCK 2-WAY
2	3	112011	PUSH NUT, WASHER CAP STYLE
3	3	112095	CLEVIS PIN, STD ZP 1/4 X 1 5/8
4	1	202001	DECAL, CHIP GUARD
5	1	202010	SEAL, TOOLBOX LID (TRIM-LOK X-2897)
6	1	205012	BOLT PACKAGE
	8	110049	WASHER, 5/16 X 1.50 FENDER
	12	110258	NUT, 5/16-18, CAGE TINNERMAN
	4	110437	BOLT, 3/8-16 X 0.75, WIZ FLANGE
	14	110444	BOLT, 5/16-18 X 0.75, WIZ FLANGE
	2	110606	NUT, 5/16-18 WIZ FLANGE
	4	110645	NUT, 3/8-16 WIZ FLANGE
	4	110665	WASHER, 5/16" FLAT STANDARD
	4	110676	WASHER, 3/8" FLAT STANDARD
7	1	211109	STEP, TOOLBOX
	.7 ft	100449	Traction Pad
8	2	212003	GASKET, TOOLBOX MOUNT
9	1	212017	Latch, Toolbox w/Studs, Key & Gasket
	1	212015	Gasket, Toolbox Latch
10	1	215211	WELDMENT, TOOLBOX & HINGE, 770 LEFT
11	1	215213	WELDMENT, TOOLBOX DOOR & HINGE, 17"
12	1	260203	TOOLBOX SKIRT, 770, LEFT
13	1	260205	TOOLBOX MAT 770, LEFT

Toolbox Complete W/Step, 770 Left (205045)			
ITEM	QTY	PART #	DESCRIPTION
1	4	110174	NUT, 1/4-20 LOCK 2-WAY
2	3	112011	PUSH NUT, WASHER CAP STYLE
3	3	112095	CLEVIS PIN, STD ZP 1/4 X 1 5/8
4	1	202001	DECAL, CHIP GUARD
5	1	202010	SEAL, TOOLBOX LID (TRIM-LOK X-2897)
6	1	205012	BOLT PACKAGE
	8	110049	WASHER, 5/16 X 1.50 FENDER
	12	110258	NUT, 5/16-18, CAGE TINNERMAN
	4	110437	BOLT, 3/8-16 X 0.75, WIZ FLANGE
	14	110444	BOLT, 5/16-18 X 0.75, WIZ FLANGE
	2	110606	NUT, 5/16-18 WIZ FLANGE
	4	110645	NUT, 3/8-16 WIZ FLANGE
	4	110665	WASHER, 5/16" FLAT STANDARD
	4	110676	WASHER, 3/8" FLAT STANDARD
7	1	211109	STEP, TOOLBOX
	.7 ft	100449	Traction Pad
8	2	212003	GASKET, TOOLBOX MOUNT
9	1	212017	Latch, Toolbox w/Studs, Key & Gasket
	1	212015	Gasket, Toolbox Latch
10	1	215212	WELDMENT, TOOLBOX & HINGE, 770 RIGHT
11	1	215213	WELDMENT, TOOLBOX DOOR & HINGE, 17"
12	1	260204	TOOLBOX SKIRT, 770, RIGHT
13	1	260206	TOOLBOX MAT 770, RIGHT

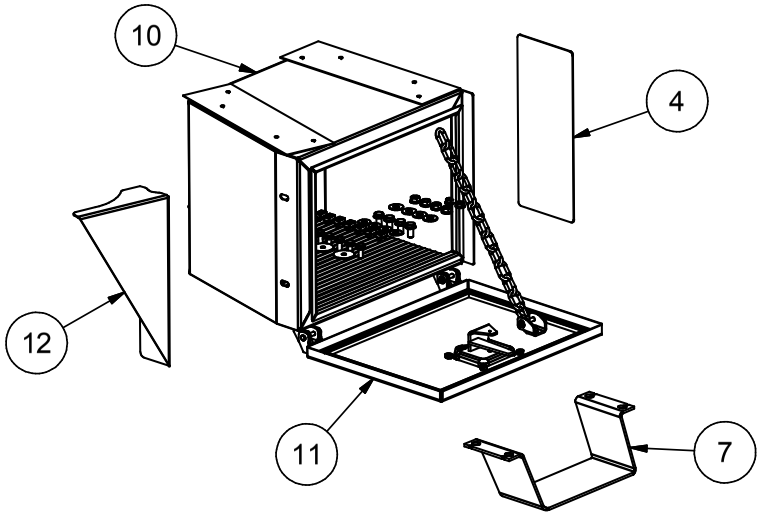

11/7/2017

Flatbed Accessories
Across the Bed Toolbox

Across the Bed Toolbox, Part# 210915			
ITEM	QTY	PART #	DESCRIPTION
1	1	210914	TOOLBOX WELD ASSEMBLY
2	2	211132	BUSHING, .625 X .5 X .062 FNG
3	4	110618	NUT, 3/8-16 LOCK NYLON INSERT
4	1	210908	ALL THREAD
5	2	211134	SPRING/LATCH
6	2	500078	Shock, Gas Filled
7	1	400010	DECAL, DEWEZE BLACK OUTLINE
8	4	110645	NUT, 3/8-16 WIZ FLANGE
9	1	211143	HANDLE WELD ASSY
10	2	110239	SetScrew, 5/16-18 X 0.3125
11	1	211138	WEAR PAD, PLASTIC TOOLBOX
12	1	110238	1/4-20 X .75 FLAT C'SUNK SCREW
13	1	110667	WASHER, 1/4" LOCK
14	1	110609	NUT, 1/4-20

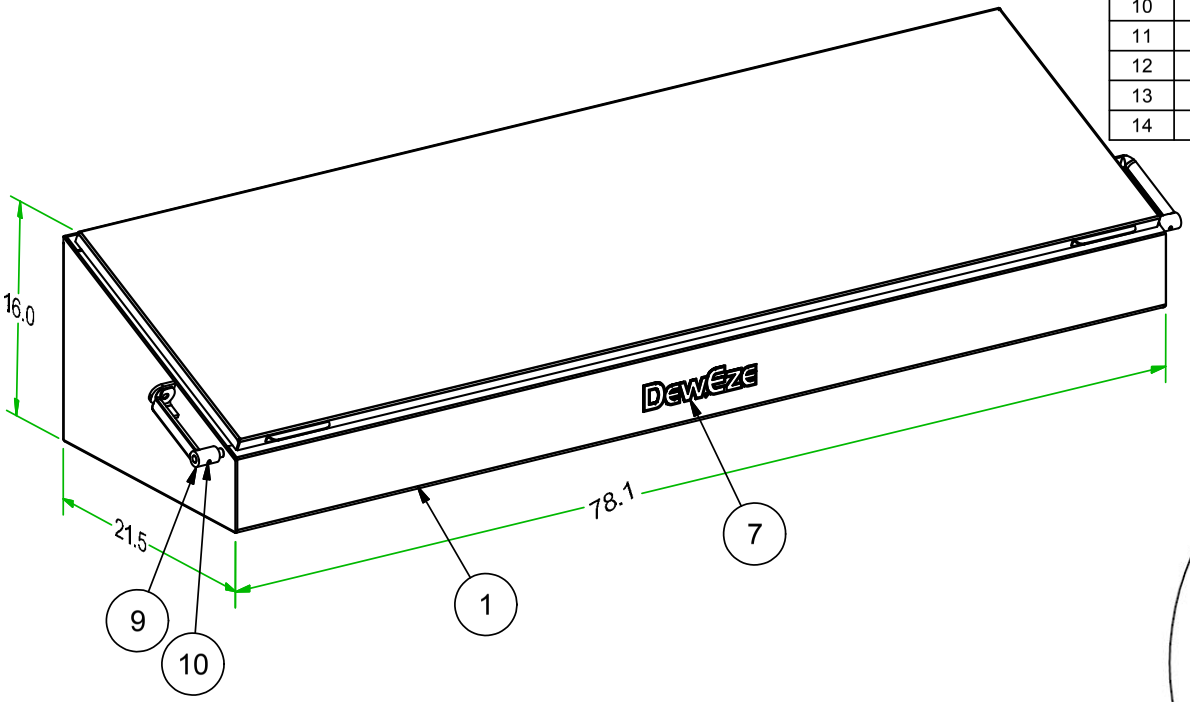

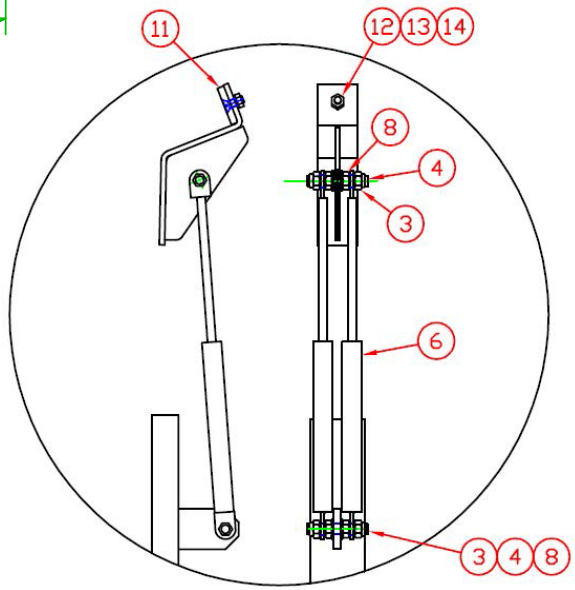

3/21/2011

Flatbed Accessories Spinners & Risers

Spinner Assy 16" Pair, Part# 210008			
ITEM	QTY	PART #	DESCRIPTION
1	2	210006	Pin, Lynch 1/4 x 1 1/2
2	2	210007	WELDMENT, SPINNER 16"
3	2	211513	LYNCH PIN GUARD

Spinner Assy 16" Pair, XRM, Part #215007			
ITEM	QTY	PART #	DESCRIPTION
1	2	210006	Pin, Lynch 1/4 x 1 1/2
2	2	211509	WELDMENT, SPINNER 16" XRM
3	2	211513	LYNCH PIN GUARD

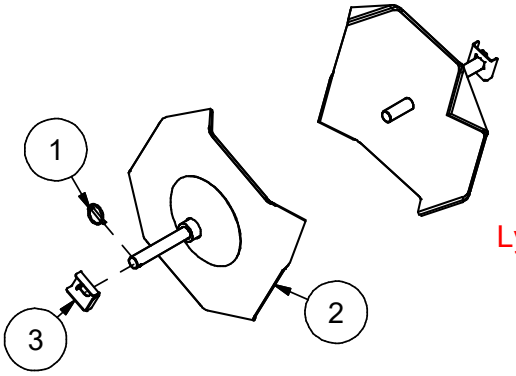

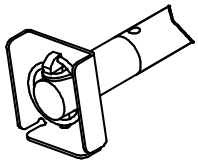

DETAIL A
Lynch Pin Guard

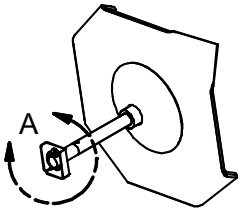

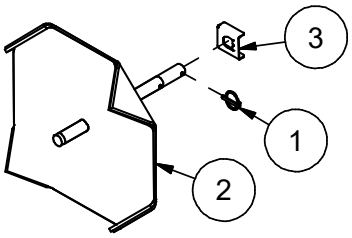

Spinner Assy 12" Pair, Part# 215081			
ITEM	QTY	PART #	DESCRIPTION
1	2	210006	Pin, Lynch 1/4 x 1 1/2
2	2	211513	LYNCH PIN GUARD
3	2	215080	WELDMENT, SPINNER 12"

Spinner Assy 12" Pair, XRM, Part# 215234			
ITEM	QTY	PART #	DESCRIPTION
1	2	210006	Pin, Lynch 1/4 x 1 1/2
2	2	211513	LYNCH PIN GUARD
3	2	215233	WELDMENT, SPINNER 12" XRM

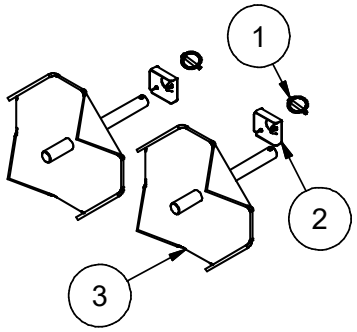

Spinner Extension Pair, Part # 205076			
ITEM	QTY	PART #	DESCRIPTION
1	2	110658	Washer, 1/2 Flat
2	2	210006	Pin, Lynch 1/4 x 1 1/2
3	2	215235	Spinner Extension Pin

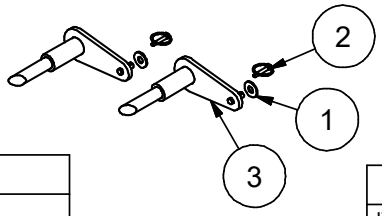

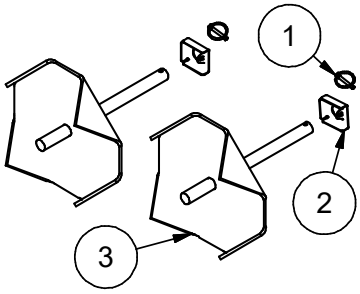

Riser, Offset Pair, Part# 211145			
ITEM	QTY	PART #	DESCRIPTION
1	2	110364	BOLT, 1-8 X 7.0
2	2	110601	NUT, 1-8
3	2	211125	RISER WELD ASSY
4	2	510174	GREASE ZERK, 1/4-28 ST

Riser, Offset XRM, Right 205350			
ITEM	QTY	PART #	DESCRIPTION
1	1	110364	BOLT, 1-8 X 7.0
2	1	110601	NUT, 1-8
3	1	211508	RIGHT RISER WELD ASSY
4	1	510174	GREASE ZERK, 1/4-28 ST

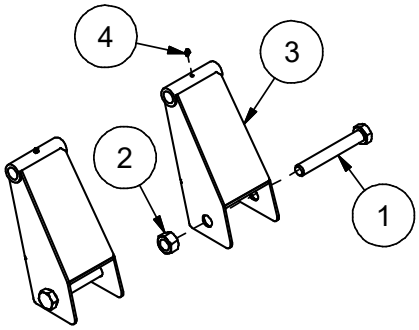

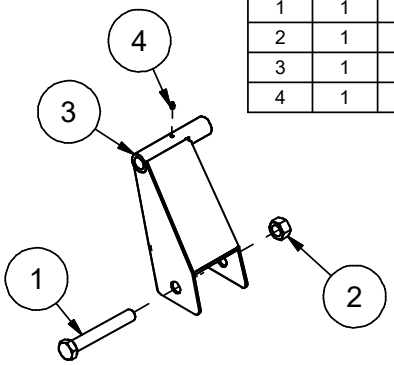

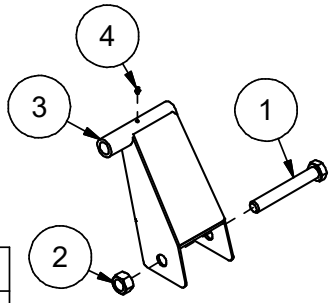

Riser, Offset XRM, Left 205349			
ITEM	QTY	PART #	DESCRIPTION
1	1	110364	BOLT, 1-8 X 7.0
2	1	110601	NUT, 1-8
3	1	211507	LEFT RISER WELD ASSY
4	1	510174	GREASE ZERK, 1/4-28 ST

4/20/2020

OTHER ACCESSORIES

Adapter Assy, 4' Bale, Part# 210933			
ITEM	QTY	PART #	DESCRIPTION
1	2	210929	4' BALE ADAPTER
2	2	210006	Pin, Lynch 1/4 x 1 1/2

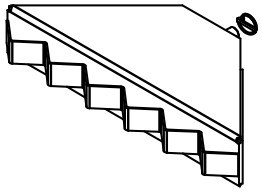

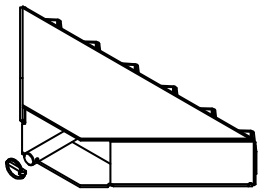

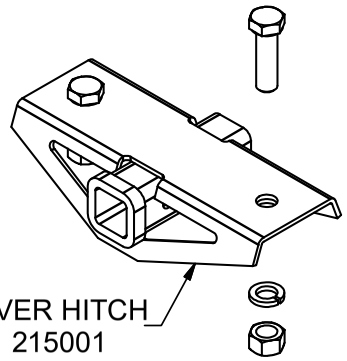

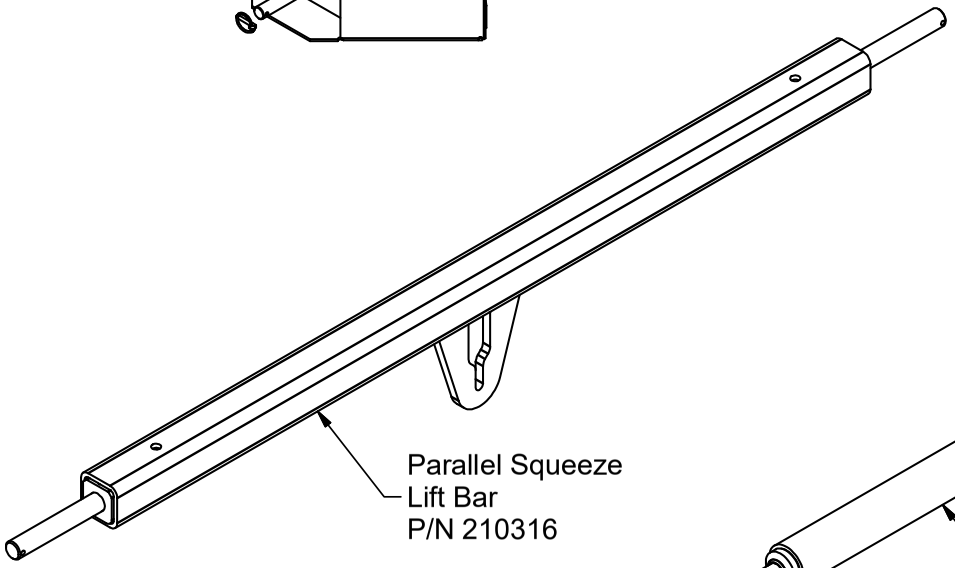

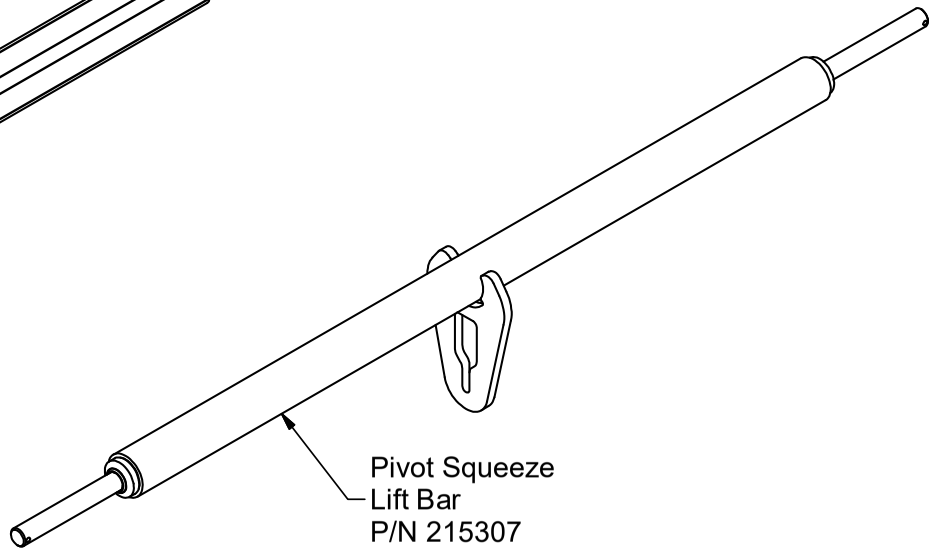

12/4/2014

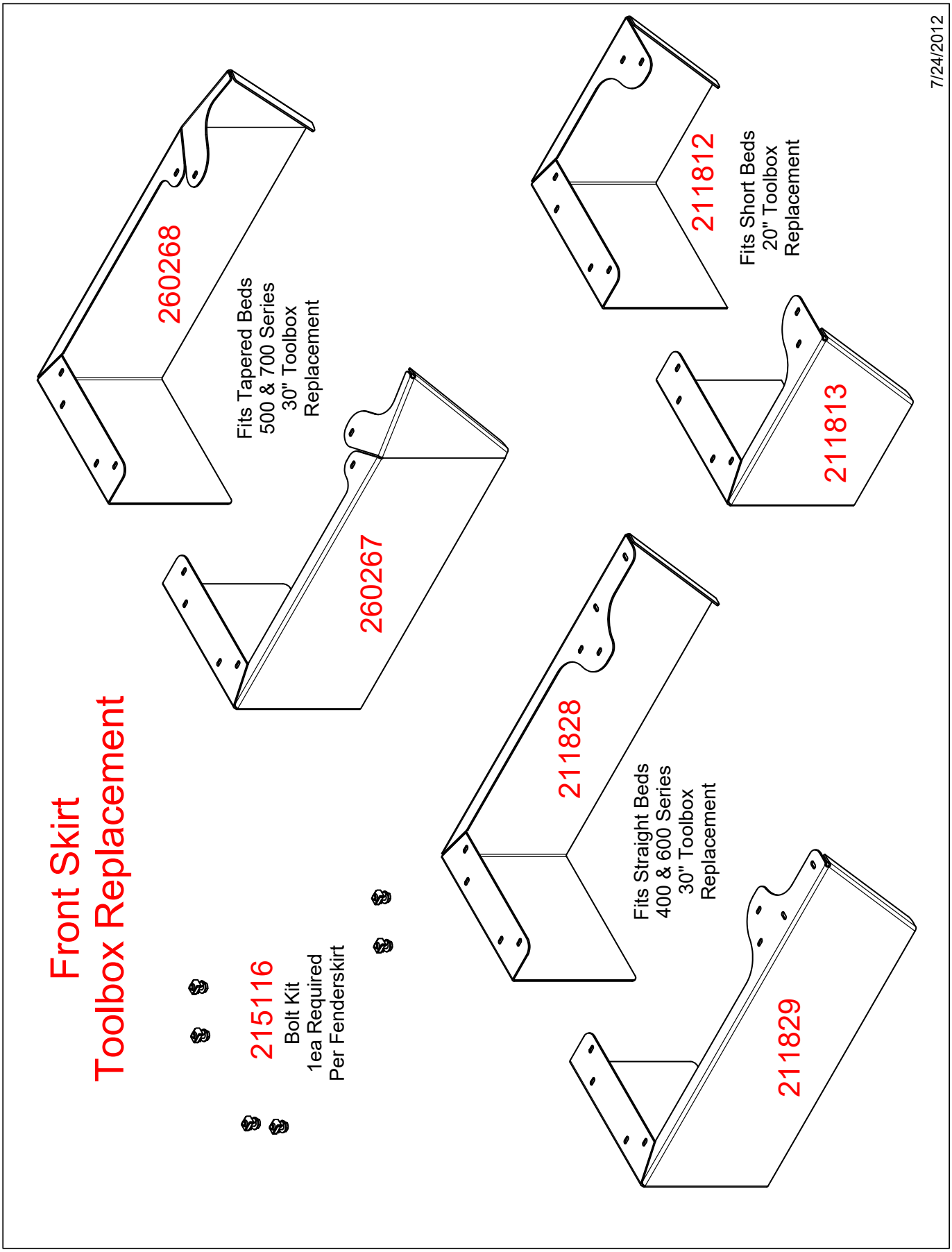
Front Skirt
Toolbox Replacement
260268
Fits Tapered Beds
500 & 700 Series
30" Toolbox
Replacement
260267
211812
Fits Short Beds
20" Toolbox
Replacement
211813
211828
Fits Straight Beds
400 & 600 Series
30" Toolbox
Replacement
211829
215116
Bolt Kit
1ea Required
Per Fenderskirt
7/24/2012

GatorHyde Repair Instructions

Required items:

1 – 25 x 25 ml caulking gun (202030)
1 – 25 x 25 ml cartridge set of GatorHyde Repair Material (202031)
1 – ¼" x 6" mixing wand (202032)
1 – pair of rubber gloves
1 – wooden stick
1 – Instruction sheet and MSDS sheet
1 – MEK – methyl ethyl ketone solvent (available at most hardware stores)
1 – small paint brush
2 – plastic cups

SAFETY WARNING!
Read the Master Safety Data Sheets (MSDS) on all chemicals before handling any chemical.
See: http://www.msds.com

Note:

This repair is designed to easily fix small, damaged areas fast and with limited amount of effort. However this product is fast reacting so make sure to thoroughly read this instruction sheet before proceeding with repairs.

Application Instruction:

Step 1. Before you start, put on rubber gloves and safety glasses.

Step 2. Place a piece of cardboard or newspaper next to the repair area prior to opening and mixing the material.

Step 3. Cut back damaged area with a razor knife to make a square.

Step 4. Sand area and feather edges with 40 grit sandpaper. Blow out sanded area to get rid of dust.

Step 5. Clean area well with MEK solvent and allow to dry for 30 minutes.

Step 6. Attach static mixing wand to 25 x 25 ml cartridge set, twist and lock in place. Insert cartridge into caulking gun.

Step 7. Hold the caulking gun in an upright position in one hand, then set the two plastic cups on a flat surface side by side. Next point the static mixing wand into a cup and squeeze the trigger of the gun two times so a small amount of material is discharged into the cup. (Note! This material is to be discarded.) Immediately move the static mixing wand over and point it into the next cup and continue to discharge the remaining amount of material into this cup.

Step 8. Allow the material to set in cup and gently stir with wooden stick for a period of 1 to 1 ½ minutes or until the GatorHyde becomes thicker and will stick to either a finger or wooden stick.

Step 9. Once material has begun to gel, apply enough product to finger or a stick and immediately dab onto damaged area. Use the paint brush to dab the area in a vertical manner to make a textured surface.

Cure time. Allow repaired area to cure for a period of 1 hour prior to heavy impact loading.

Clean-up. In order to clean up the area take a paper sack or plastic trash bag and place all the empty jars and remaining contents of the repair kit and dispose into a standard trash can or simply put everything back in the box and throw away.

GatorHyde Protective Coatings, Inc., 2210 South Highway 69, Wagoner, OK 74467 * (918) 485-2835 *
www.gatorhyde.com

SYNCHRONIZING TRANSMITTER AND RECEIVER

To teach the transmitter ID code to the receiver, use the following procedure:

1. Make sure the receiver and transmitter are OFF.
2. Press and hold transmitter's button 1 and 8 (as shown) then press Power button until both LEDs start blinking, then release buttons.
3. Apply power to the receiver.
4. Wait for ~5 seconds or until the green LED on the transmitter starts blinking rapidly.
5. Teach complete.

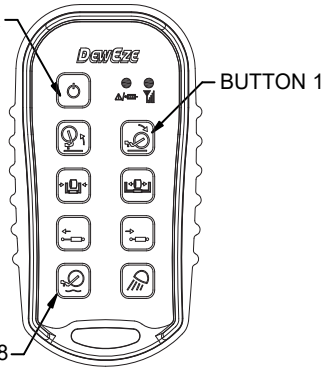

TRANSMITTER ERROR CODE CHART

ERROR CODE	PROBABLE CAUSE
1	LOW BATTERY
2	FAULTY CIRCUIT TO OUTPUT A
3	FAULTY CIRCUIT TO OUTPUT B
4	FAULTY CIRCUIT TO OUTPUT C
5	FAULTY CIRCUIT TO OUTPUT D
6	FAULTY CIRCUIT TO OUTPUT E
7	FAULTY CIRCUIT TO OUTPUT F
8	FAULTY CIRCUIT TO OUTPUT G
9	FAULTY CIRCUIT TO OUTPUTH
10	FAULTY CIRCUIT TO LIGHT OUTPUT

ERROR CODE IS THE NUMBER OF RED BLINKS BETWEEN EVERY PAUSE.

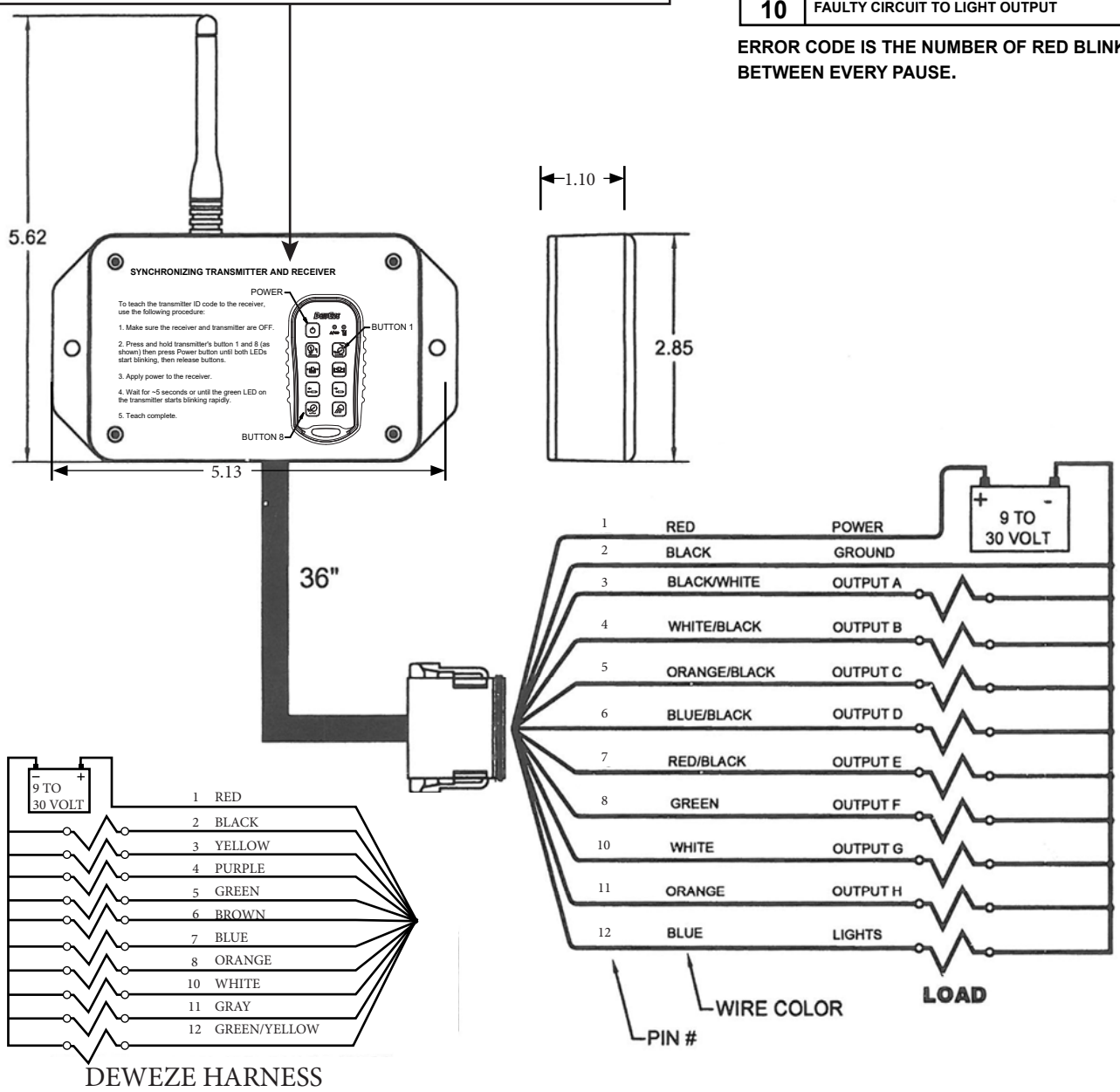

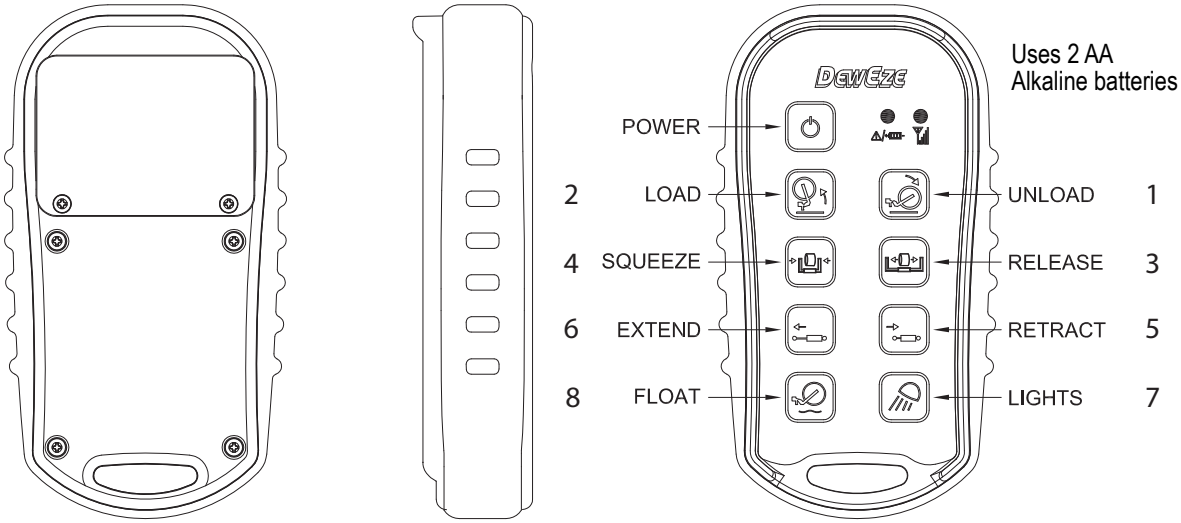

SYSTEM OPERATION:
Press and hold the power button on the transmitter until both LEDs turn on, then release. The green LED will flash rapidly when communication has been established. When the receiver is off, the red LED will flash slowly indicating this. With the receiver on, press the corresponding buttons on the tranmitter keypad to turn on and off each of the outputs.

INDICATOR LIGHTS:
The transmitter has two LED indicators, the red BATTERY/DIAGNOSTIC indicator and the green TRANSMIT indicator.
The green TRANSMIT indicator flashes rapidly whenever there is communication between the transmitter and the receiver.
The red BATTERY/DIAGNOSTIC indicator blinks once per second when the battery voltage is low. It also blinks when there is a problem with the system in the form of an error code. Refer to the ERROR CODE CHART tables for more information.
Note: To check for low battery, turn the receiver off and leave the transmitter on. If the transmitter red LED continues to blink, the battery is low. If the red LED blinks only when the receiver is ON, count the number of blinks and refer to the ERROR CODE CHART.

SLEEP TIME:
The transmitter is factory set to turn off (sleep) after 15 minutes. Use the following procedure to change the time before sleep mode.

1. Press and hold 3 (UNSQEEZE), 4 (SQUEEZE), 8 (FLOAT) and POWER
2. Release the buttons and both lights should blink once per second.
3. Choose one of the following buttons:
    a. 1 (UNLOAD) = 15 min
    b. 2 (LOAD) = 30 min
    c. 3 (UNSQUEEZE) = 1 hr
    d. 4 (SQUEEZE) = 2 hr
    e. 8 (FLOAT) = sleep disabled.

PROGRAMMING OUTPUTS:
The Kar-Tech transmitter can be programmed for different machines. Follow steps to ensure correct mode is enabled.

BALE BED

1. Ensure transmitter and receiver are in sync
2. Turn OFF receiver and turn transmitter ON
3. Press and hold buttons 1 (UNLOAD), 4 (SQUEEZE), & 8 (FLOAT). Red LED will start blinking.
4. Turn ON receiver
5. Hold and release button 2 (LOAD).
6. Hold and release POWER button to save and exit the config mode.

SPECIFICATIONS:
RF Transmit power (EIRP): 10 mW
RF Frequency: 902-928 MHz
Operating temperature - Radio: -40C to +85C
Battery life (min): 30 hours continuous.
Vibration: 3G to 200Hz
Outputs: 5A max each (20A system max)

2 Bank Wiring, Kar-Tech Remote

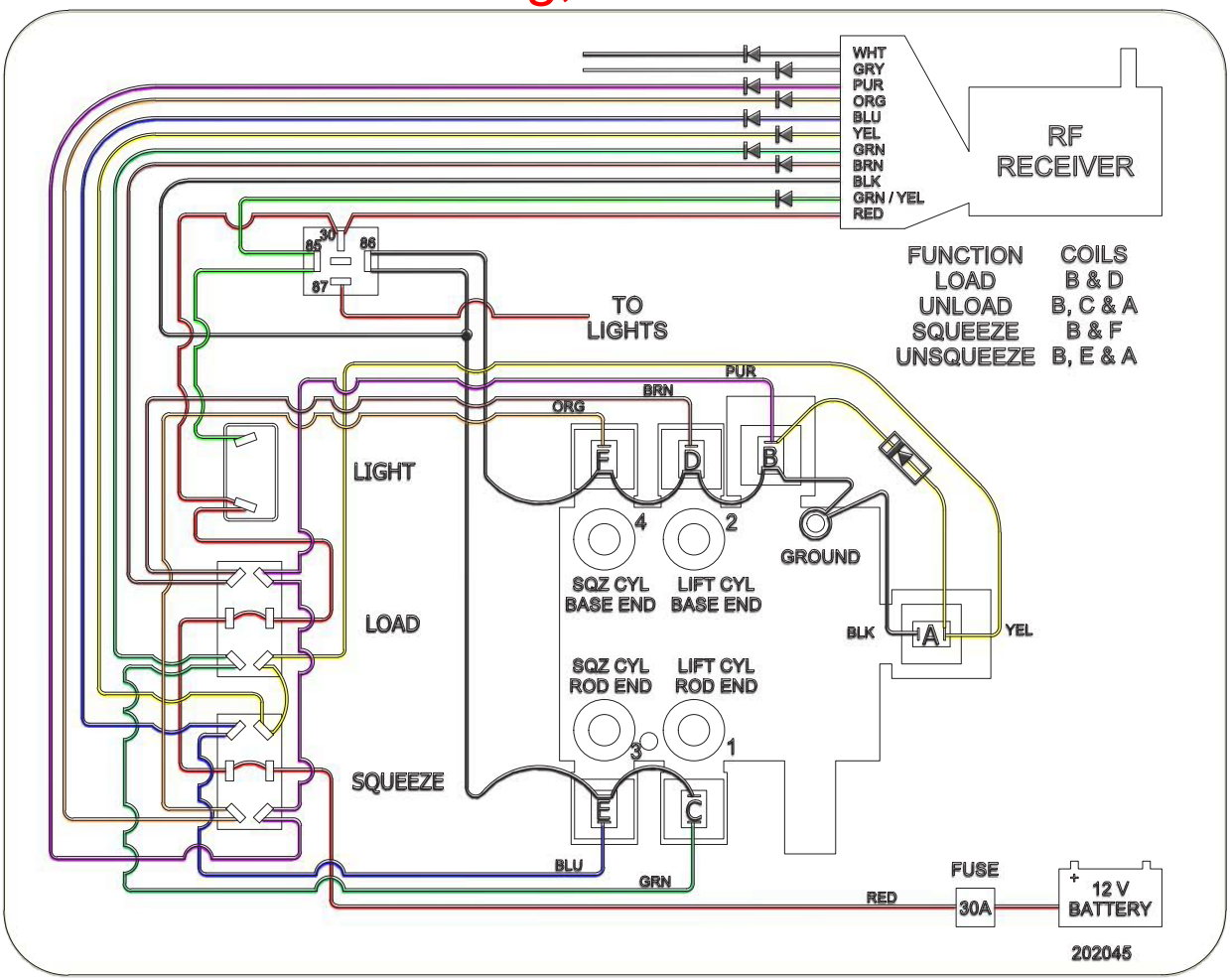

Decal Part# 202045 Harness Part# 232087

Mini Relay SPDT 12V
530111

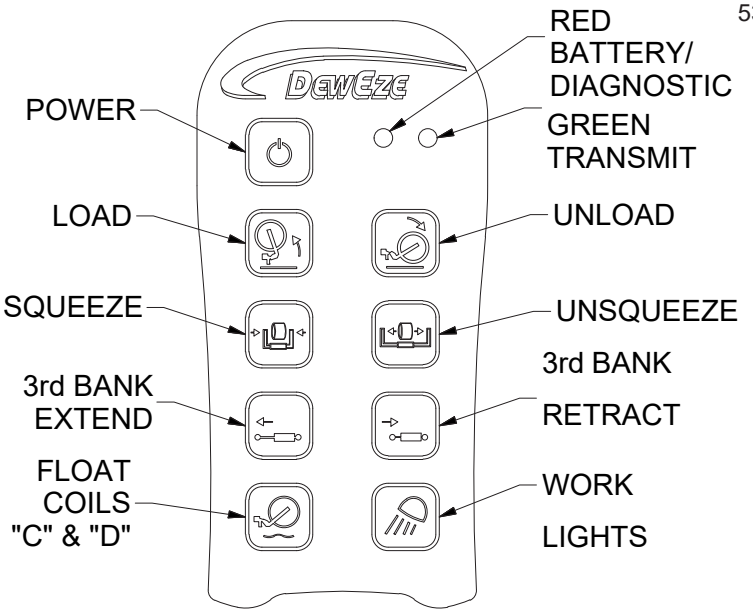

3/11/2011

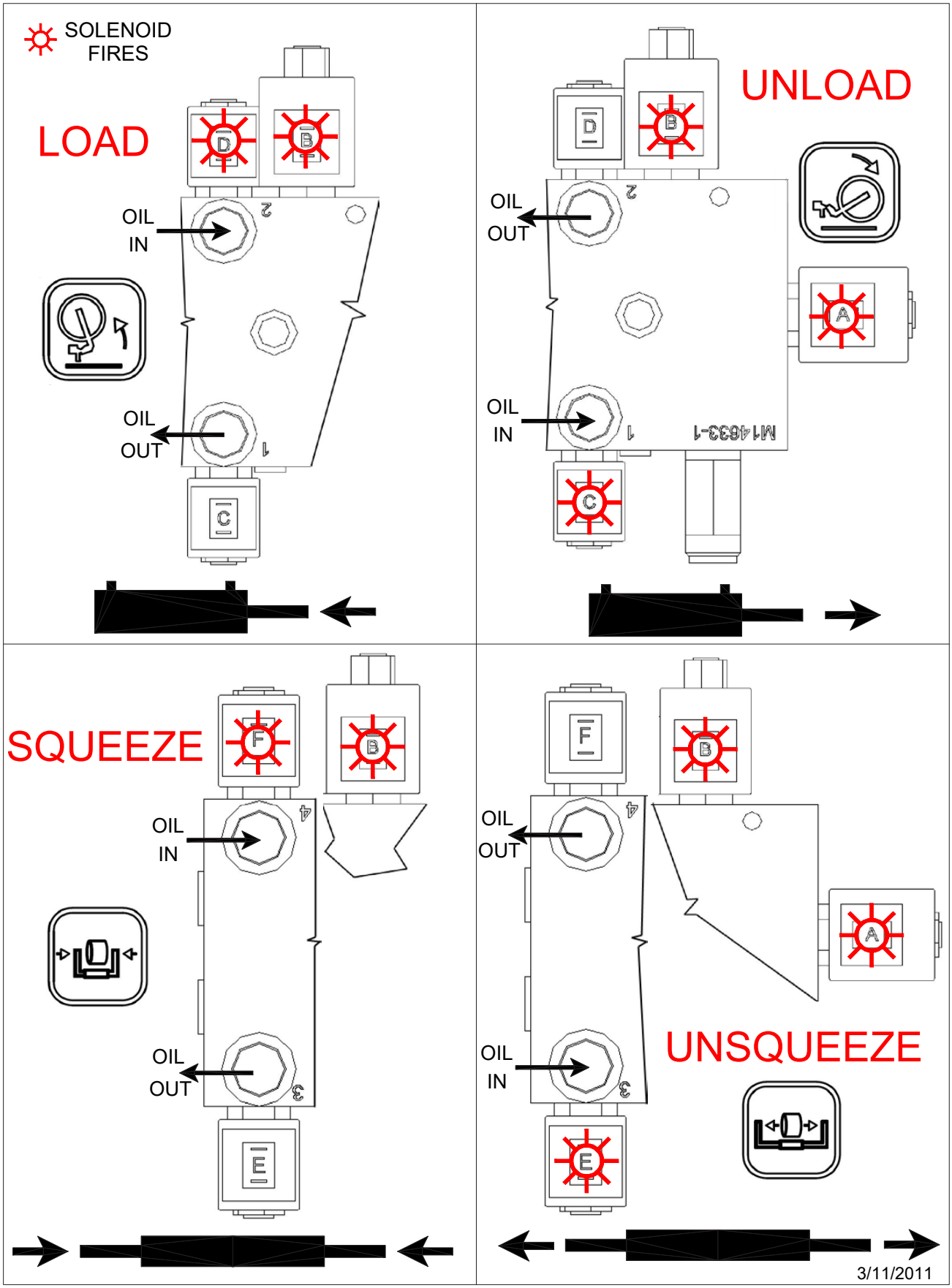
SOLENOID FIRES
LOAD
OIL IN
OIL OUT
UNLOAD
OIL OUT
OIL IN
M14633-1
SQUEEZE
OIL IN
OIL OUT
UNSQUEEZE
OIL OUT
OIL IN
3/11/2011

Wiring for Gen II Valve

1. Install ground wire 232039 as shown on coils (A,B,C,D,E,F)
2. Install diode harness 232038 (harness has piggy back connectors) per table 1.
3. Install harness 150006 from control handle into back of piggy back connectors per table 1.
4. The red wire from harness 150006 goes the supplied fuse. The fuse wire is connected to the + terminal on battery.
5. The black wire from harness 150006 is spliced into the clutch wire.

Connection	232038	150006
A	Green/Blue	
B	Orange	Orange
C	Green/Green	Green
D	Brown	Brown
E	Blue/Blue	Blue
F	Yellow	Yellow
CLUTCH		Black
BATTERY (+)		Red

Table 1

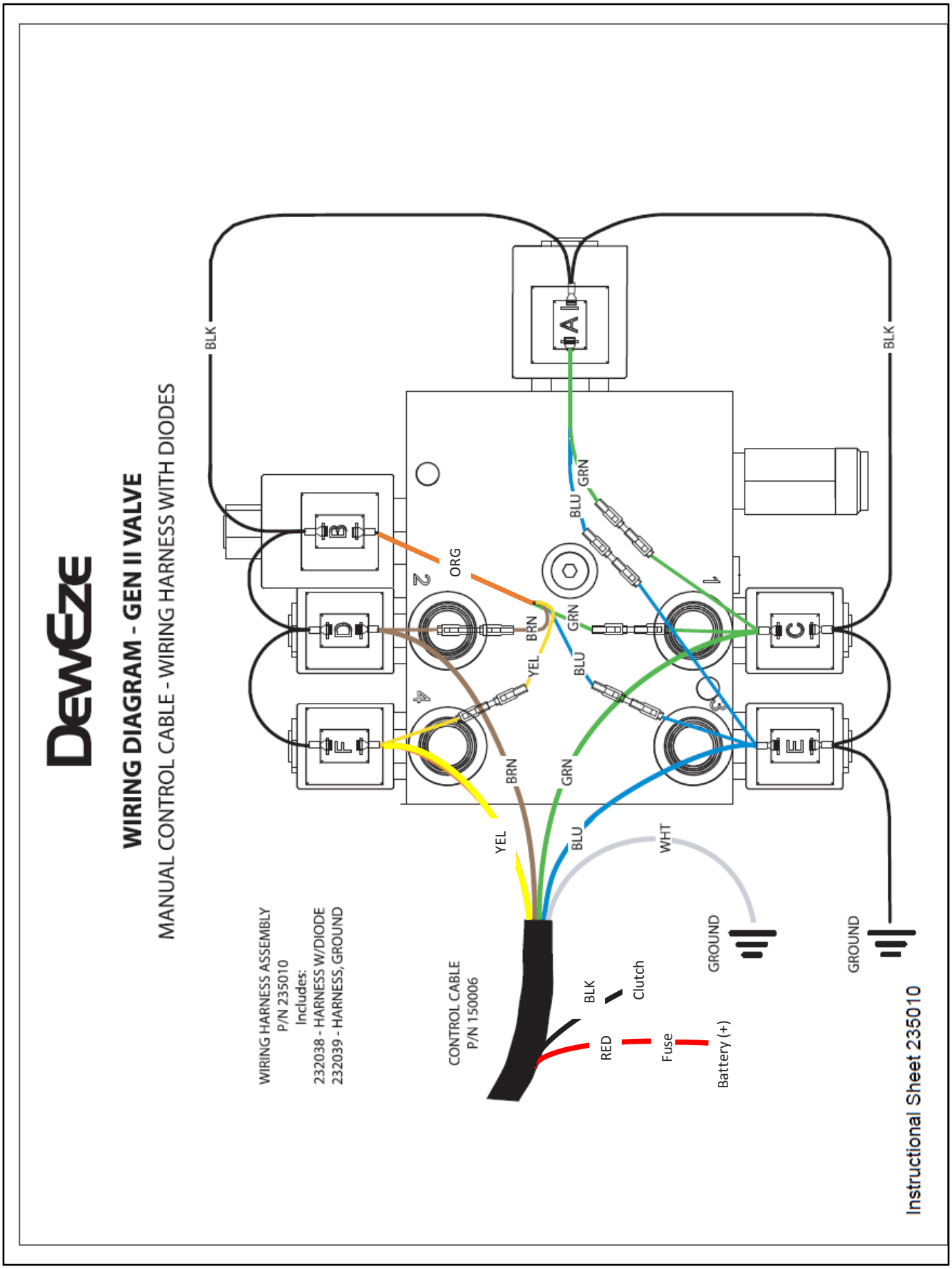
DEWEZE
WIRING DIAGRAM - GEN II VALVE
MANUAL CONTROL CABLE - WIRING HARNESS WITH DIODES
WIRING HARNESS ASSEMBLY
P/N 235010
Includes:
232038 - HARNESS W/DIODE
232039 - HARNESS, GROUND
CONTROL CABLE
P/N 150006
BLK
RED
Clutch
Fuse
Battery (+)
GROUND
WHT
YEL
BRN
GRN
BLU
ORG
A
B
C
D
E
F
1
2
3
4
Instructional Sheet 235010

3rd Bank Wiring, Kar-Tech Remote

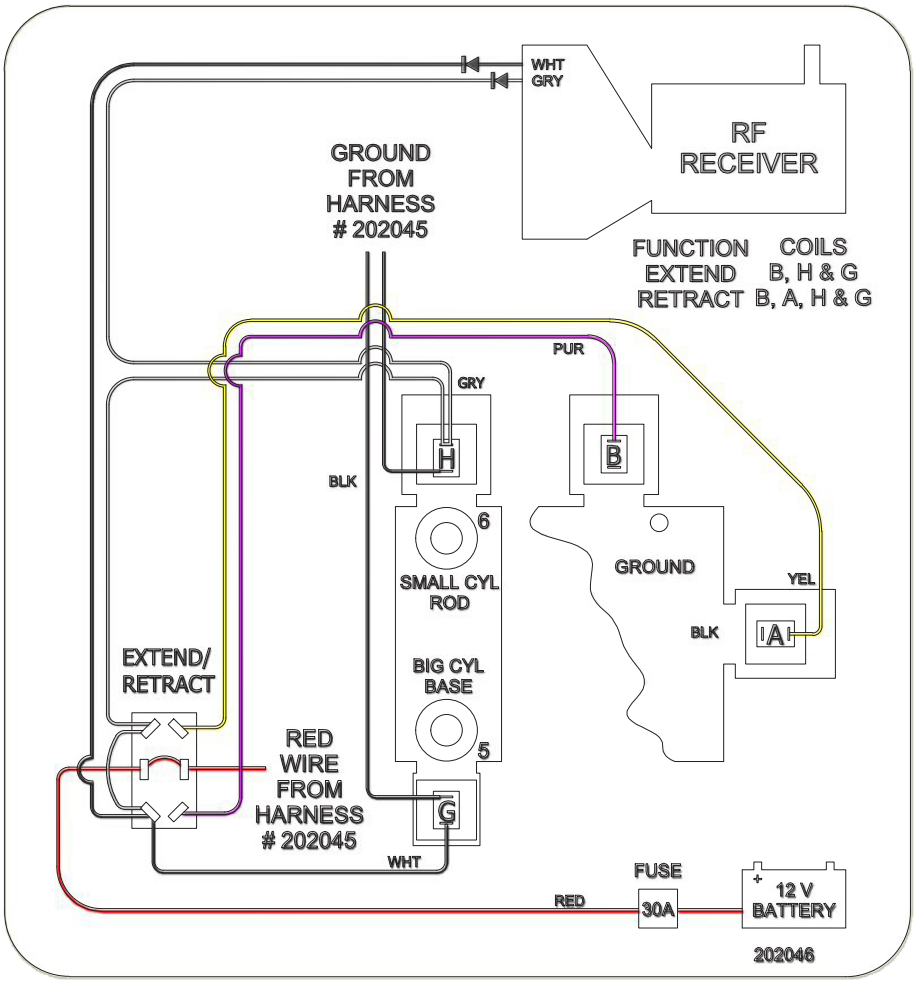

Decal Part# 202046 Harness Part# 232088

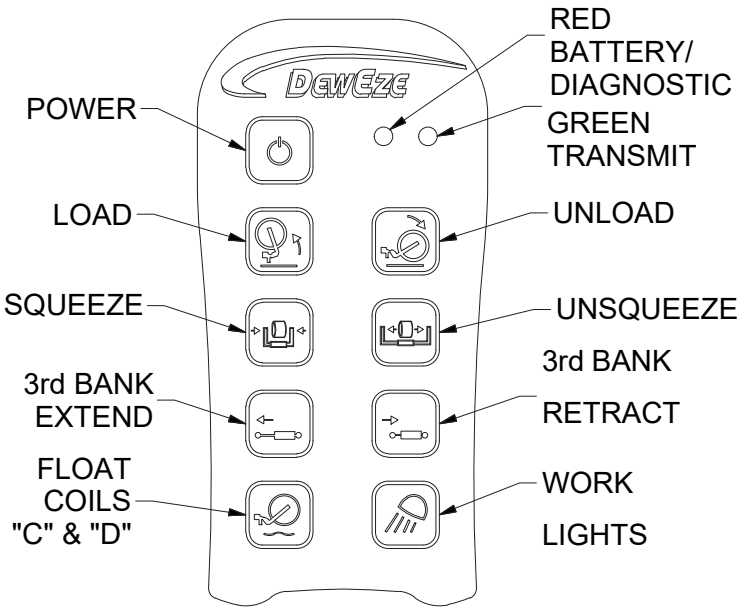

3/11/2011

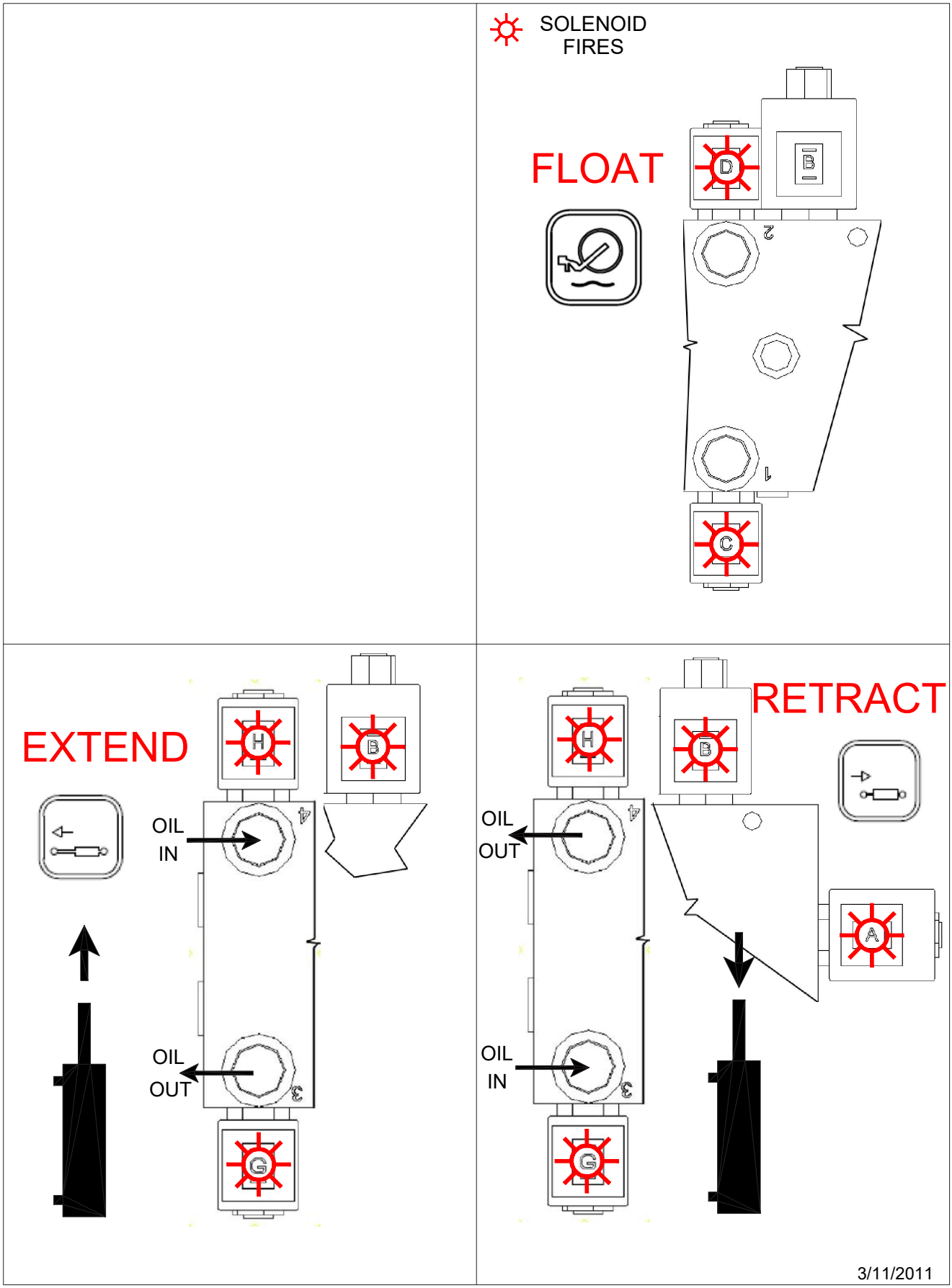
SOLENOID FIRES
FLOAT
D
B
C
1
2
EXTEND
H
B
G
OIL IN
OIL OUT
4
3
RETRACT
H
B
G
A
OIL OUT
OIL IN
4
3
3/11/2011

2 Bank Wiring, Kar-Tech Remote

Gen 3 Double Poppet, Deutsch

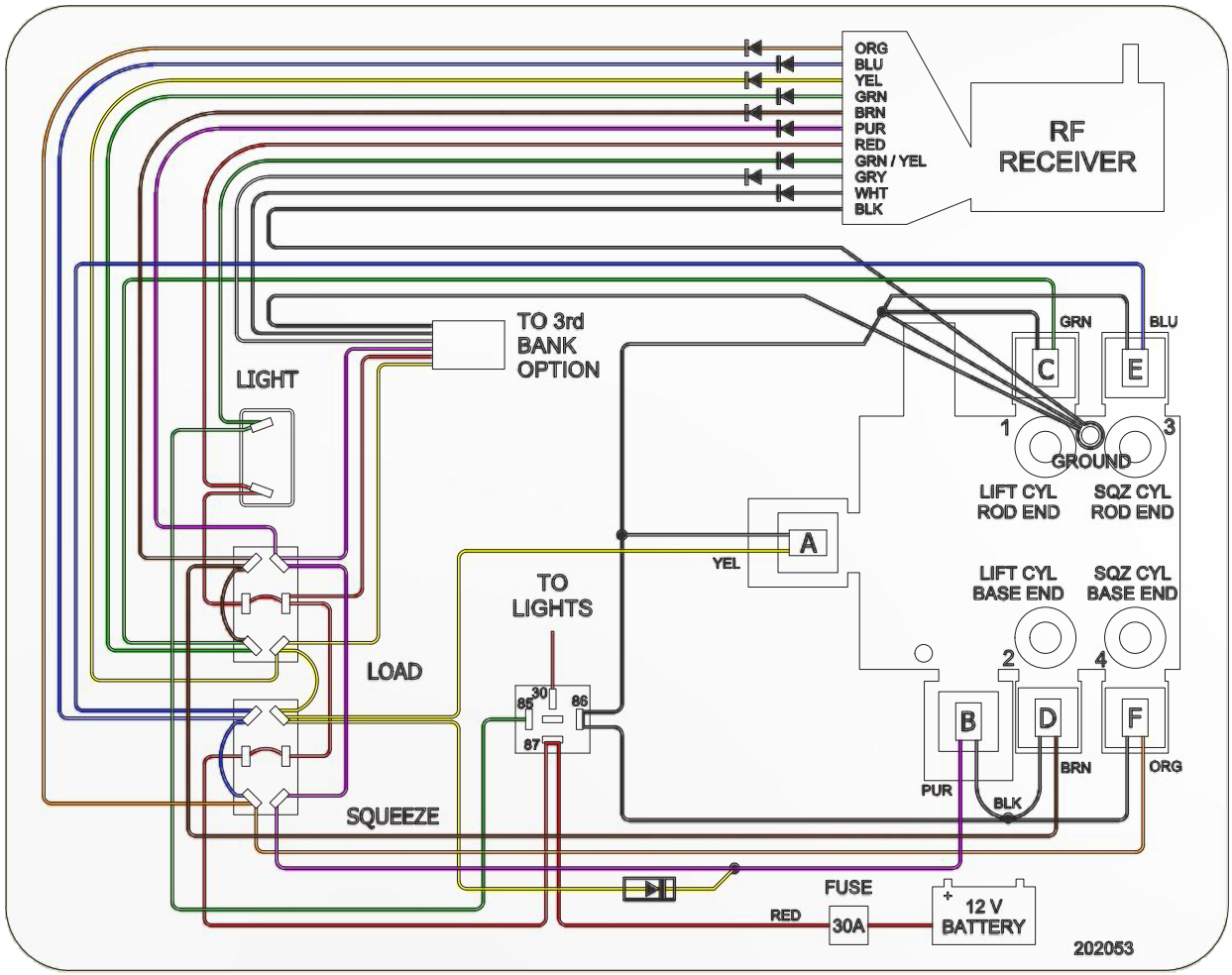

Decal Part# 202053 Harness Part# 232098 Mini Relay SPDT 12V 530111

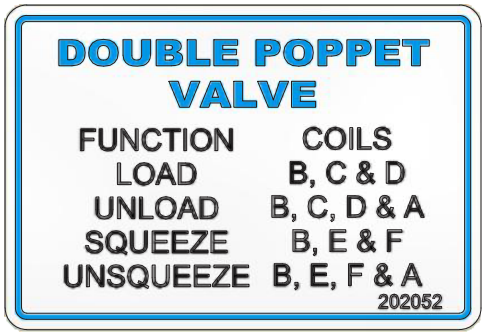

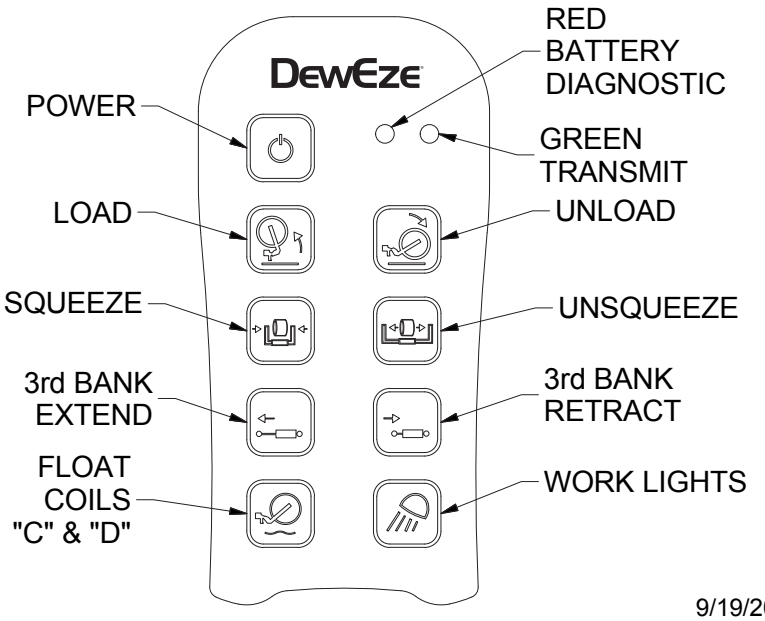

PAGE 1 OF 2

9/19/2014

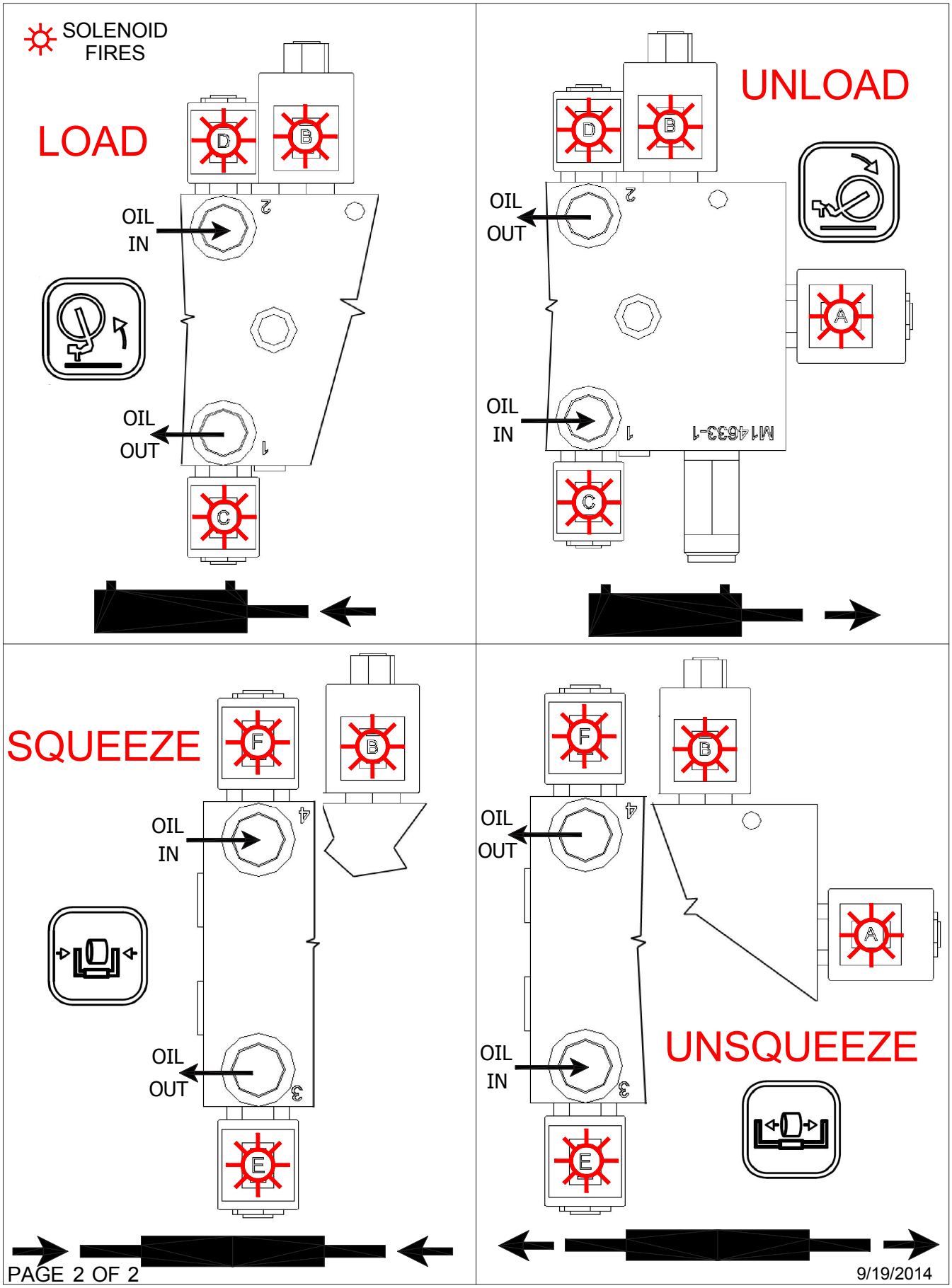
SOLENOID FIRES
LOAD
OIL IN
OIL OUT
UNLOAD
OIL OUT
OIL IN
M14633-1
SQUEEZE
OIL IN
OIL OUT
UNSQUEEZE
OIL OUT
OIL IN
PAGE 2 OF 2
9/19/2014

3rd Bank Wiring, Kar-Tech Remote

Gen 3 Double Poppet, Deutsch

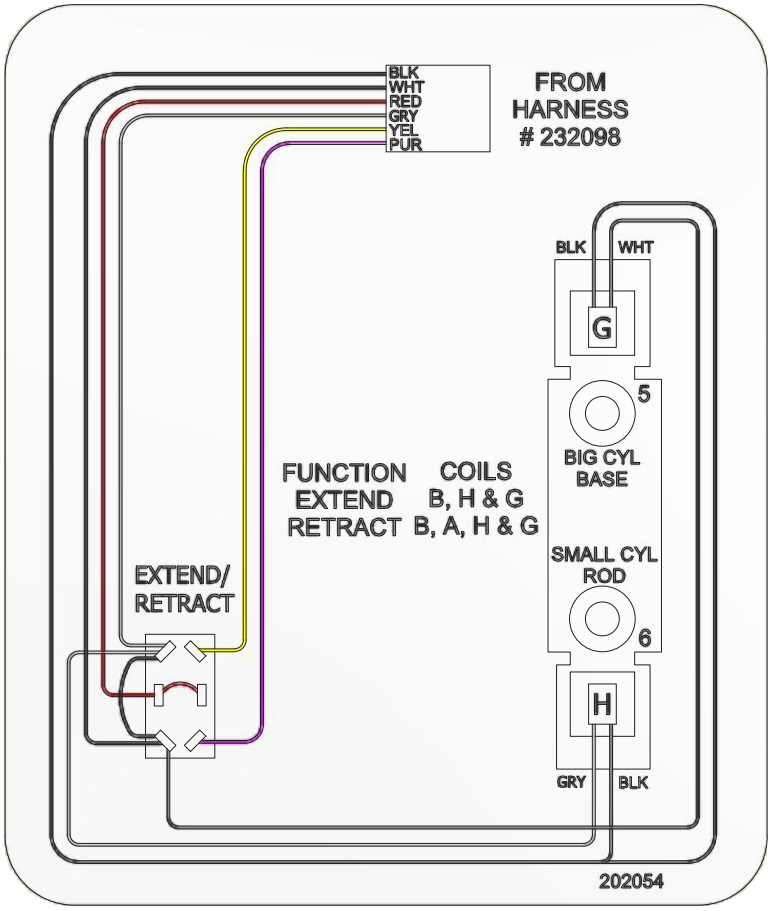

Decal Part# 202054 Harness Part# 232099

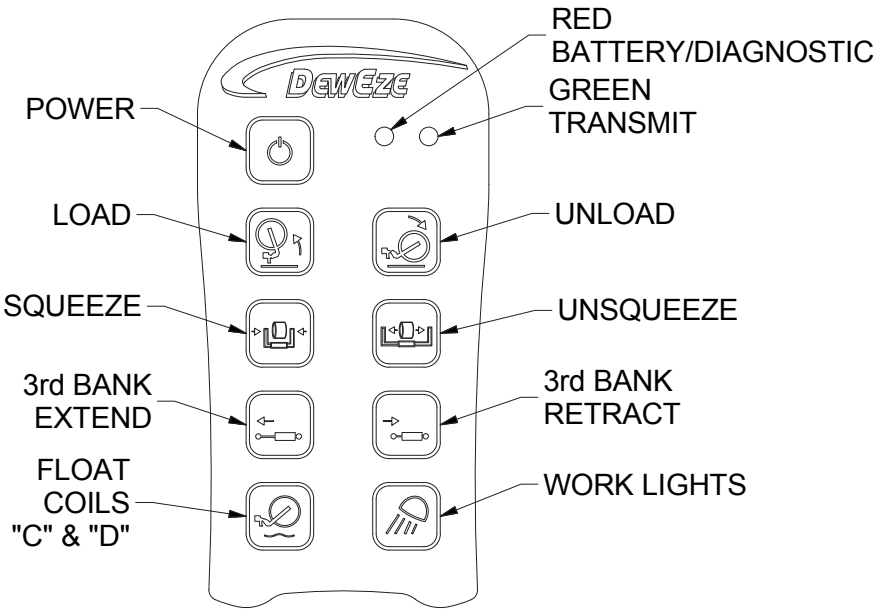

9/19/2014

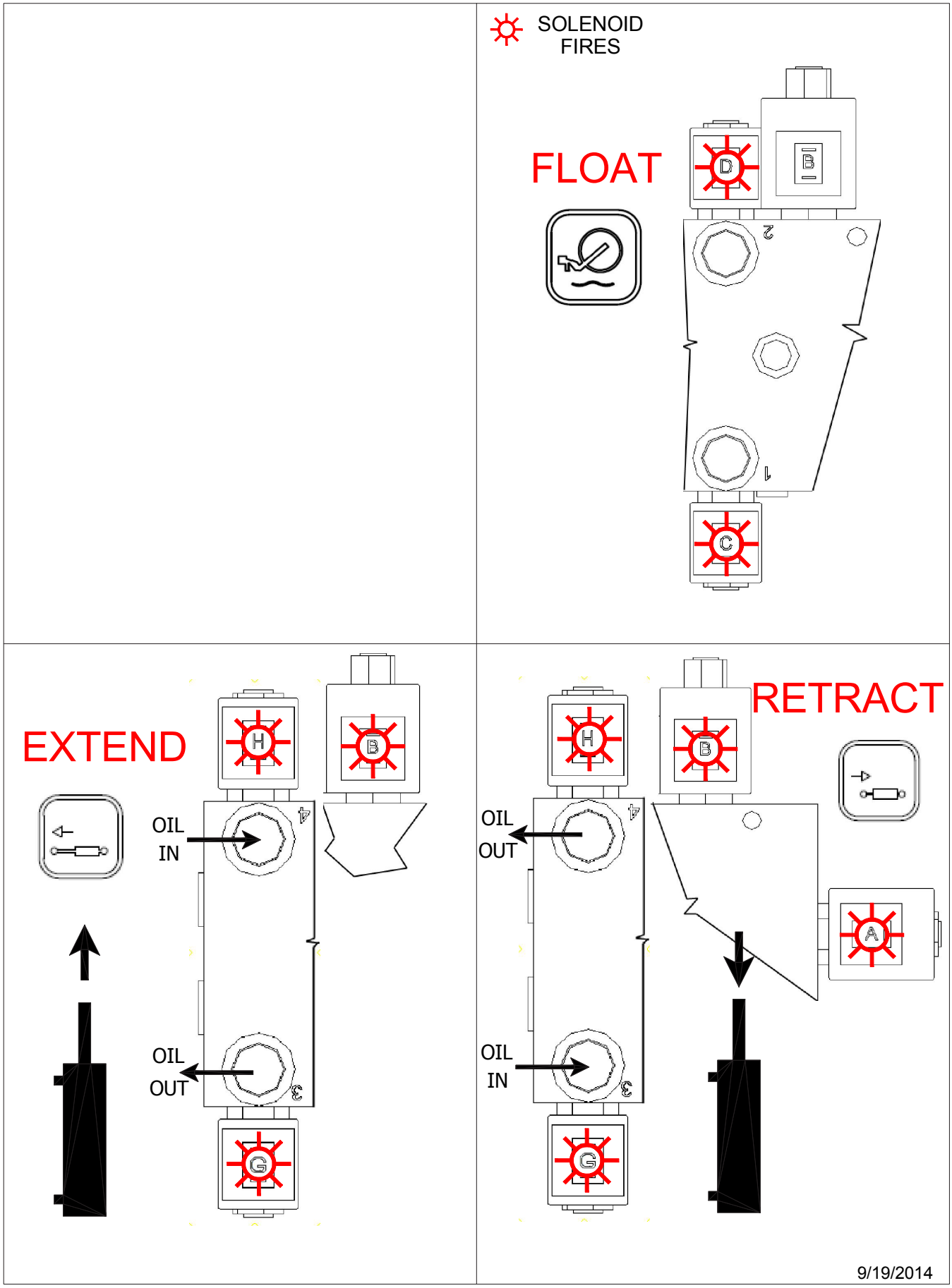
SOLENOID FIRES
FLOAT
D
B
C
2
1
EXTEND
H
B
G
OIL IN
OIL OUT
4
3
RETRACT
H
B
A
G
OIL OUT
OIL IN
4
3
9/19/2014

Standard E/H Power Kit

E / H KIT INSTALLATION INSTRUCTIONS

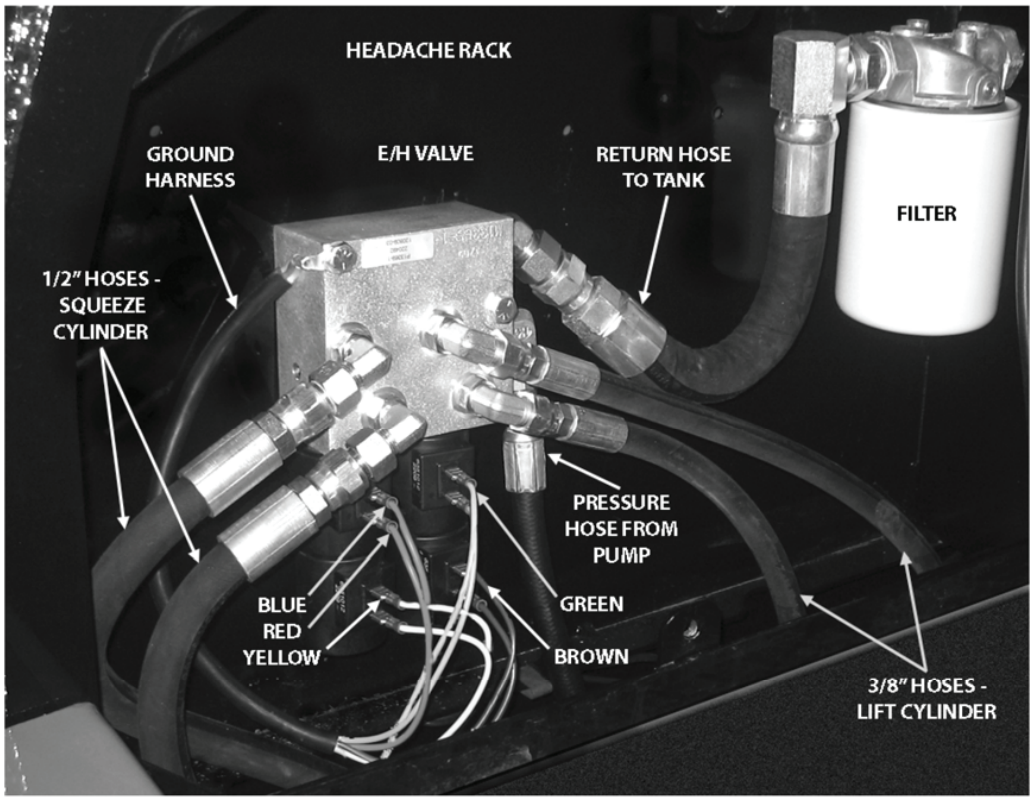

1) Attach adapters to E/H valve and install inside cavity on headache rack.

2) Attach return hose to valve and filter housing. Attach pressure hose from pump.

3) Attach blue and yellow wires from hand control to valve cartridge that controls squeeze cylinder as indicated.

4) Attach green and brown wires from hand control to valve cartridge that controls lift cylinder as indicated.

5) Attach ground harness to valve coils with similar color wires (yellow, brown and green). Blue and red wires are on same coil.

6) Attach 1/2" hoses from squeeze cylinder to side of valve controlled by blue and yellow wires. If hand control does not respond as desired, pioneer couples on rear of bed may be reversed or blue and yellow wires may be reversed.

7) Attach 3/8" hoses from lift cylinder side of valve controlled by green and brown wires. If hand control does not respond as desired, green and brown wires may be reversed.

8) Use diagram to locate holes in driver's side toolbox.

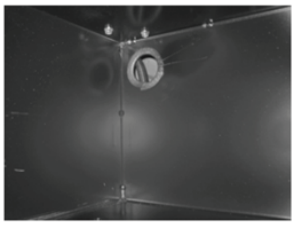

9) Drill 2.5" hole with hole saw and use molding to protect hoses from rough edges.

10) Drill 3/8" holes for pump as indicated and bolt pump to inside of toolbox.

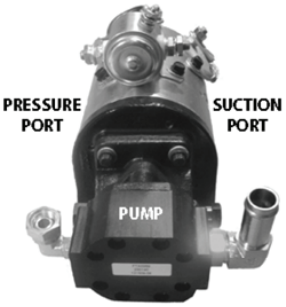

11) Attach suction hose and pressure hose to pump with adapters provided.

12) Attach suction hose to bottom of reservoir as indicated in diagram.

13) Attach black wire from hand control to negative terminal on solenoid.

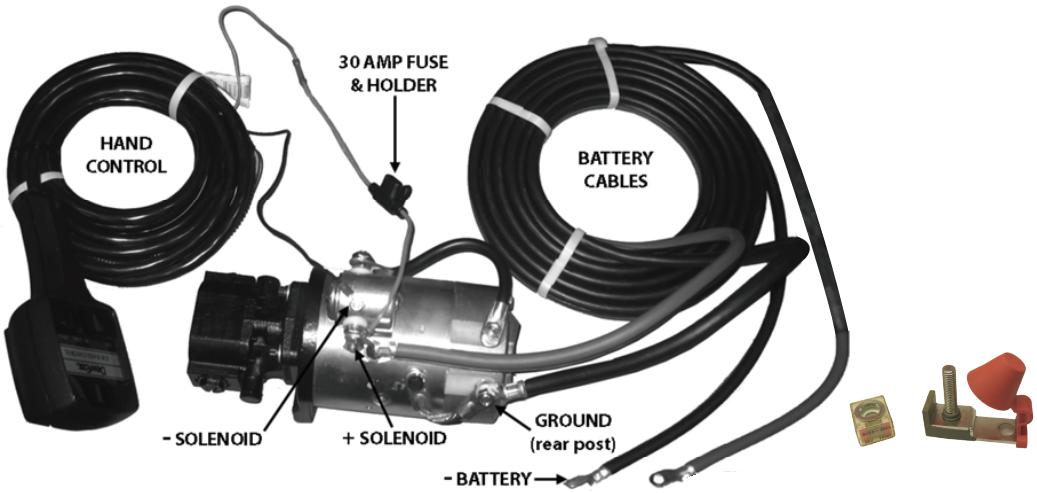

14a) Attach 30-amp fuse holder to positive terminal on solenoid and then to red wire from hand control.

14b) Attach 30-amp fuse holder to positive terminal on battery, run wire thru switch on dash. Then to red wire on valve harness for wireless remote.

15) Run battery cables through hold in toolbox and attach to E/H motor as indicated (black cable to rear post).

16) Run battery cables along frame rail and attach black cable to negative terminal on battery.

17) Attach 200-amp fuse holder to positive battery terminal.

18) Insert 200-amp fuse.

19) Attach red cable from E/H ontop of "ice cube" fuse. Install rubber cap.

Standard E/H Power Kit W/ Remote

ITEM	QTY	PART #	DESCRIPTION
1	1	110141	NUT, M8 X 1.25 WIZFLANGE
2	4	110437	BOLT, 3/8-16 X 0.75, WIZ FLANGE
3	2	110645	NUT, 3/8-16 WIZ FLANGE
4	2	112136	Clamp, 3/4" T-Bolt, Supra W2-120
5	1	120087	ADAPTER, 6MB-8MJ45
6	2	120142	ADAPTER, 8MJ-6FJ
7	2	120149	ADAPTER, 6MB-6FPX90
8	1	120187	ADAPTER, 12BH-8MB90
9	4	120222	ADAPTER, 6MJ-6MB90
10	1	120457	ADAPTER, 8FJ-10MJ
11	1	120544	ADAPTER, 20MB-12FOR
12	1	120545	ADAPTER, 12BH-12MB 45°
13	1	132001	FUSE HOLDER, ATC, 14 GA., MINI
14	1	132002	FUSE, MINI 30 AMP
15	1	132044	Switch, Spst, Rocker Led
16	1	132092	FUSE COVER, BUSS CFCOVER-1R
17	1	132093	FUSE HOLDER, BUSS CFBAR1-M8XSP
18	2	132094	FUSE 200 AMP, BUSS MRBF-200
19	1	202047	DECAL, E/H WIRING DIAGRAM, KAR-TECH
20	1	211353	E/H SHIELD
21	1	220492	VALVE, E/H FLATBED
22	1	220508	HOSE, .375 X 50.44, 6MP - 6MP
23	1	220603	HOSE, SUCTION, .75 X 54
24	1	230140	E/H MOTOR PUMP/UNIT
	1	210884	MOTOR
	1	220651	PUMP
	1	222006	SEAL KIT, PUMP
	1	232089	SOLENOID, 3 POLE, HEAVY DUTY
25	1	230155	BATTERY CABLE, 2GA TWIN LEAD, 186"
26	1	233003	Transmitter & Receiver, Kar-Tech
			NOT SHOWN
	3	110119	NUT, 10-24 LOCK
	3	110264	BOLT, 10-24 X .5 STAINLESS, PHILLIPS
	2	110396	BOLT, 5/16-18 X 2.5
	2	110608	NUT, 5/16-18
	2	110674	WASHER, 5/16" LOCK
	2	110753	PLUG, 1/2" BUTTON PLASTIC
	2	132035	SWITCH BOOT
	2	132127	Switch, Toggle, DPDT, (On)-OFF-(ON)
	1	202003	DECAL, SWITCH IDENTIFICATION
	1	211387	EDGE MOLDING, REAR PLATE
	1	232090	HARNESS, E/H WIRELESS, KAR-TECH

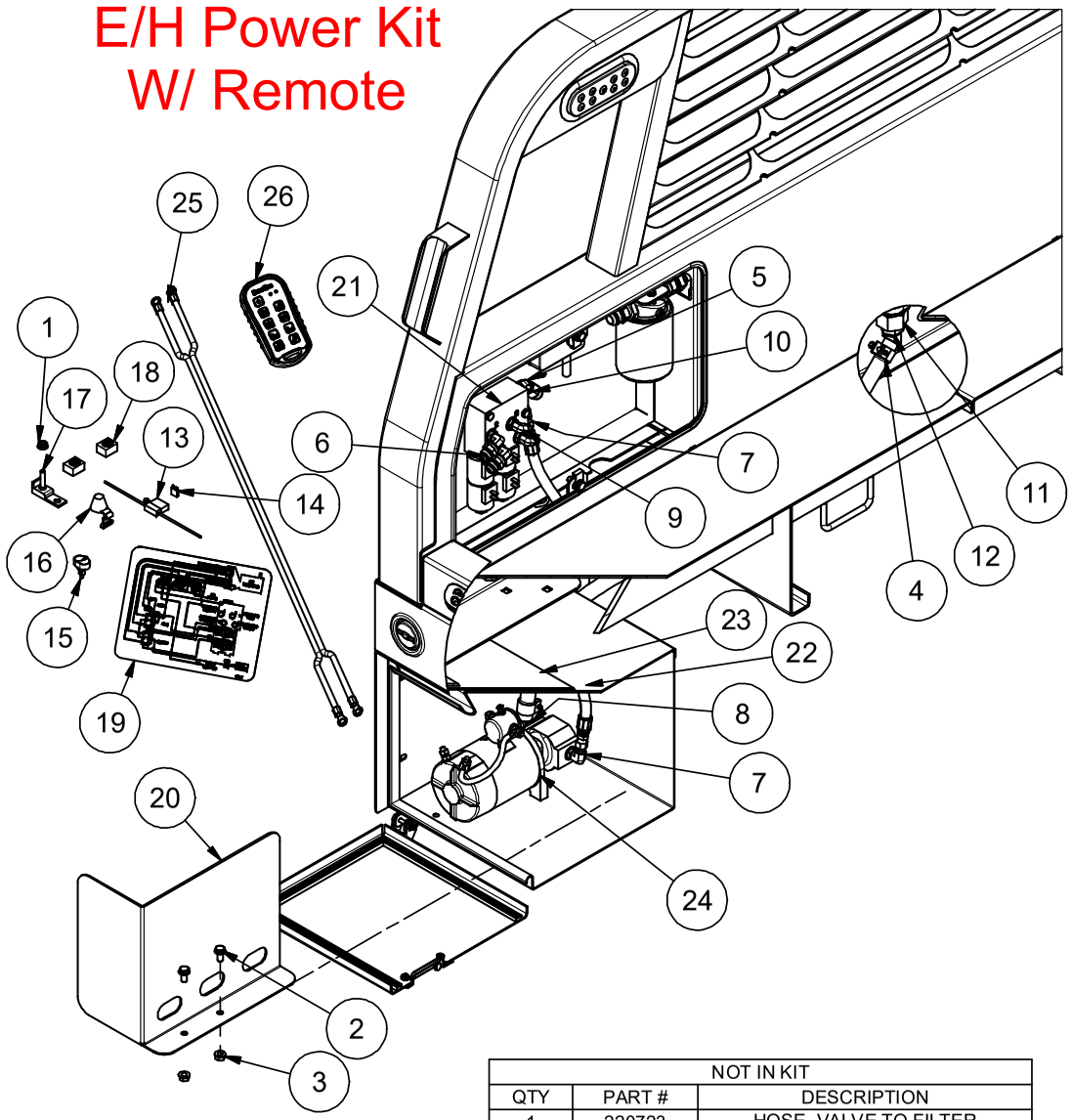

Mini Relay SPDT 12V
530111

NOT IN KIT		
QTY	PART #	DESCRIPTION
1	220723	HOSE, VALVE TO FILTER
1	720041	FILTER HEAD
1	720043	FILTER (WIX 51551)

4/22/2020

E/H Wiring, Kar-Tech Remote

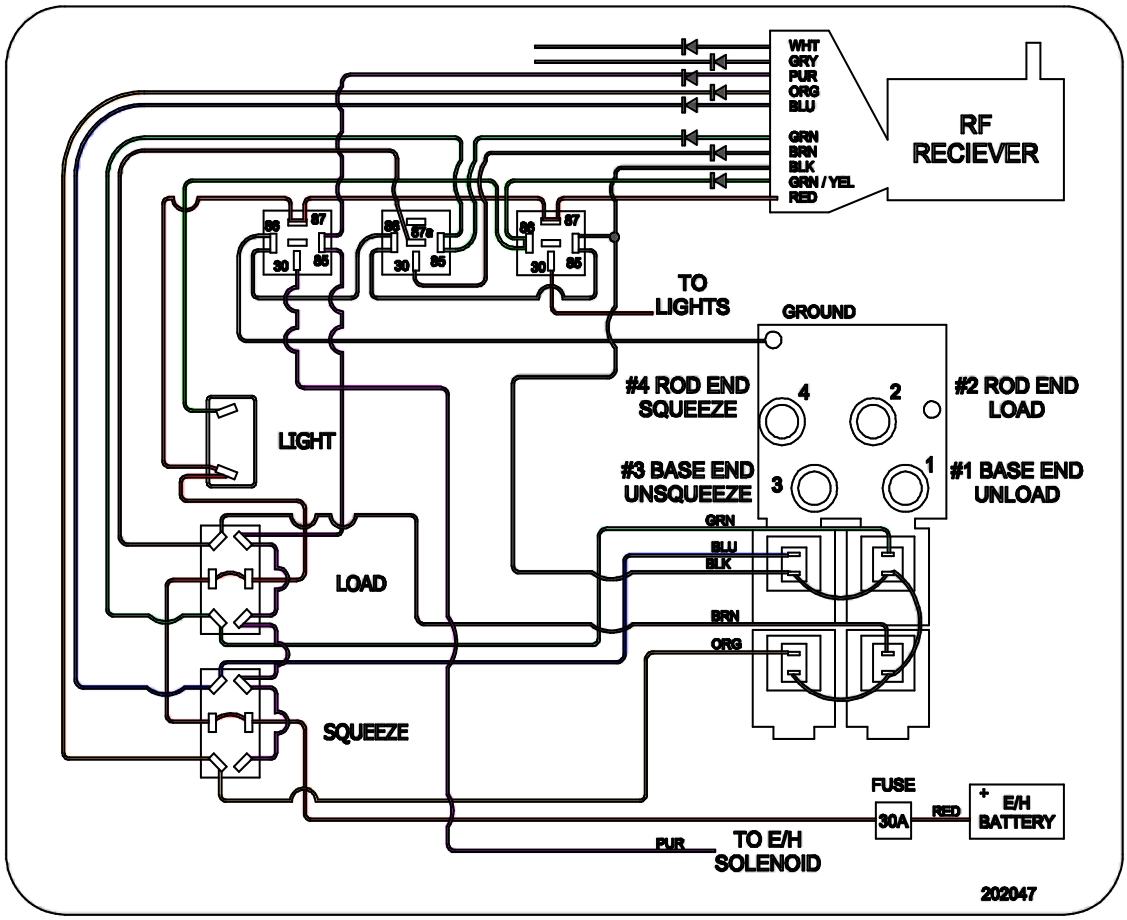

Decal Part# 202047 Harness Part# 232090

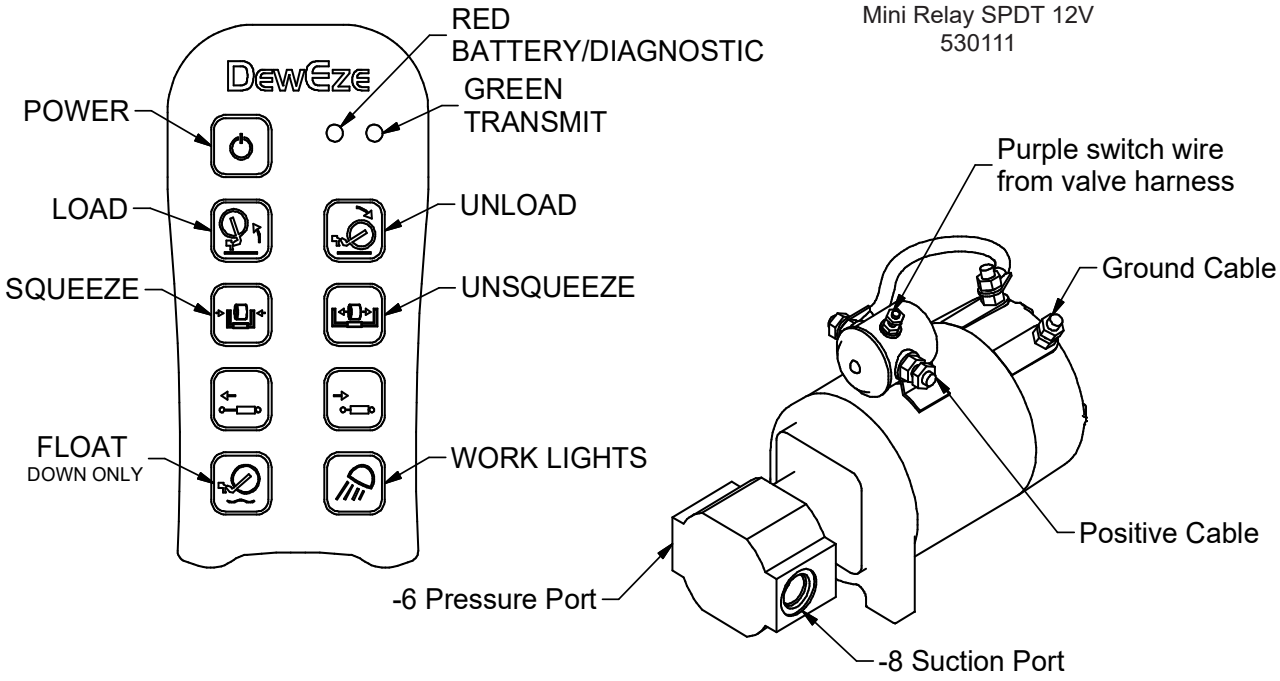

4/22/2020

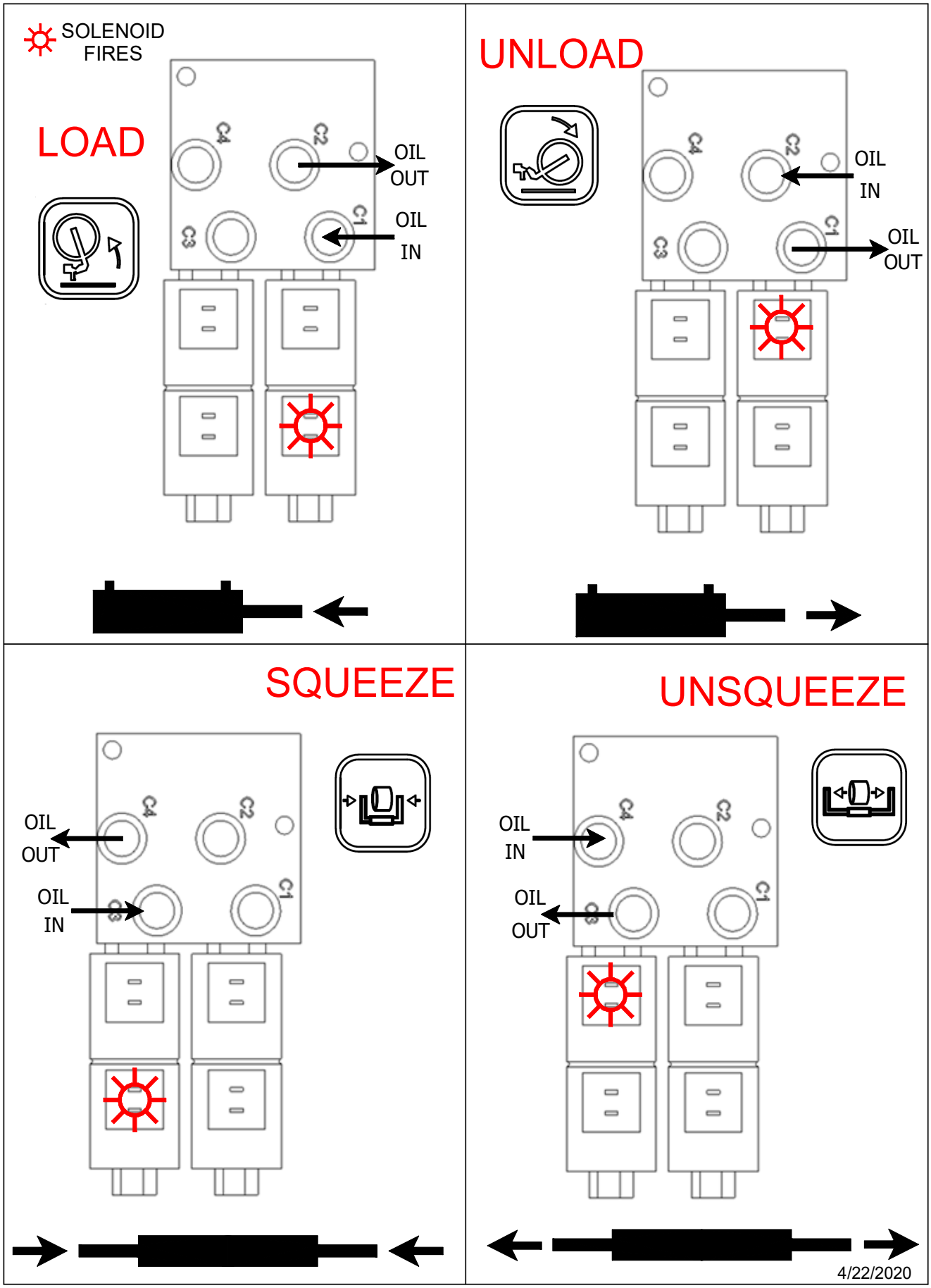
SOLENOID FIRES
LOAD
C4
C2
C3
C1
OIL OUT
OIL IN
UNLOAD
C4
C2
C3
C1
OIL IN
OIL OUT
SQUEEZE
C4
C2
C3
C1
OIL OUT
OIL IN
UNSQUEEZE
C4
C2
C3
C1
OIL IN
OIL OUT
4/22/2020

E/H Power Kit

ITEM	QTY	PART #	DESCRIPTION
1	2	110396	BOLT, 5/16-18 X 2.5
2	4	110437	BOLT, 3/8-16 X 0.75, WIZ FLANGE
3	2	110608	NUT, 5/16-18
4	2	110645	NUT, 3/8-16 WIZ FLANGE
5	2	110674	WASHER, 5/16" LOCK
6	4	110753	PLUG, 1/2" BUTTON PLASTIC
7	2	112136	Clamp, 3/4" T-Bolt, Supra W2-120
8	1	120087	ADAPTER, 6MB-8MJ45
9	2	120142	ADAPTER, 8MJ-6FJ
10	2	120149	ADAPTER, 6MB-6FPX90
11	1	120187	ADAPTER, 12BH-8MB90
12	4	120222	ADAPTER, 6MJ-6MB90
13	1	120457	ADAPTER, 8FJ-10MJ
14	1	120544	ADAPTER, 20MB-12FOR
15	1	120545	ADAPTER, 12BH-12MB 45°
16	1	132001	FUSE HOLDER, ATC, 14 GA., MINI
17	1	132002	FUSE, MINI 30 AMP
18	1	132092	FUSE COVER, BUSS CFCOVER-1R
19	1	132093	FUSE HOLDER, BUSS CFBAR1-M8XSP
20	2	132094	FUSE 200 AMP, BUSS MRBF-200
21	1	150027	HAND CONTROL & CABLE ASSY E/H FLATBED
22	1	211353	E/H SHIELD
23	1	220492	VALVE, E/H FLATBED
24	1	220508	HOSE, .375 X 50.44, 6MP - 6MP
25	1	220603	HOSE, SUCTION, .75 X 54
26	1	230140	E/H MOTOR PUMP/UNIT
	1	210884	MOTOR
	1	220651	PUMP
	1	222006	SEAL KIT, PUMP
	1	232089	SOLENOID, 3 POLE, HEAVY DUTY
27	1	230155	BATTERY CABLE, 2GA TWIN LEAD, 186"
			NOT SHOWN
28	1	211387	EDGE MOLDING, REAR PLATE
29	1	230119	CABLE, SOLENOID GROUND
30	1	730008	TERMINAL, BUTT CONNECTOR, 14-16
31	1	730013	TERMINAL, RING, 5/16", 14-16
			NOT IN KIT
32	1	220723	HOSE, VALVE TO FILTER
	1	720041	FILTER HEAD
	1	720043	FILTER (WIX 51551)

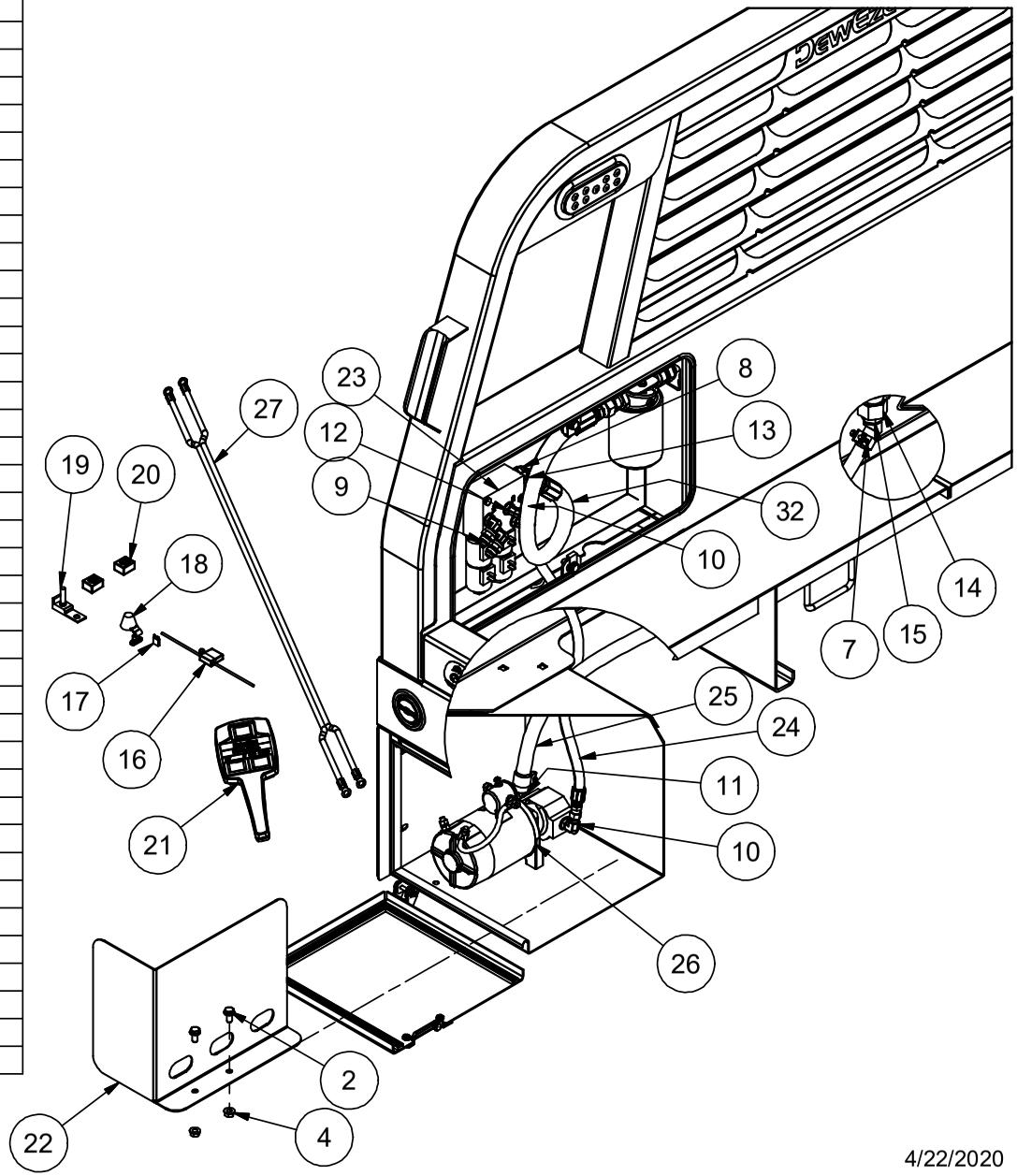

4/22/2020

E/H Power Kit

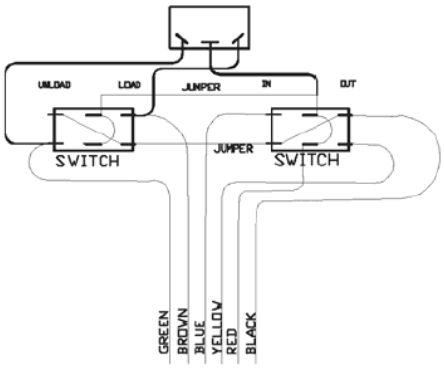

WIRING DIAGRAM
SWITCHES SHOWN FROM BOTTOM

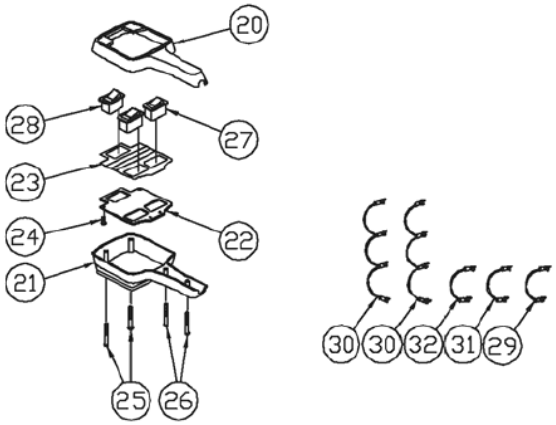

20	150001	TOP HOUSING (1)
21	150003	BOTTOM HOUSING (1)
22	150002	SWITCH PLATE (1)
23	150004	DECAL (1)
24	150013	SCREW (4)
25	150015	SCREW (2)
26	150014	SCREW (2)
27	130029	SWITCH DPDT (2)
28	130002	MOMENTARY SWITCH (1)
29	150029	JUMPER WIRE/HOT (1)
30	150030	JUMPER WIRE/HOT (2)
31	150031	JUMPER WIRE/GRN. (1)
32	150032	JUMPER WIRE/BRN. (1)

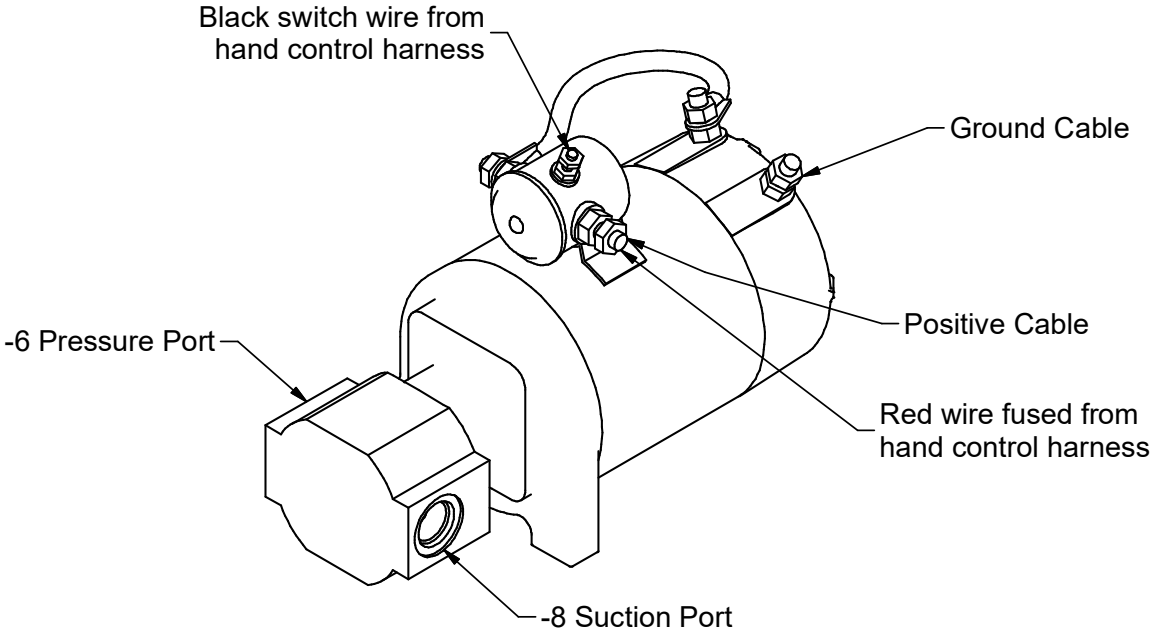

4/22/2020

DEWEZE E/H KIT - 30" TOOLBOX MODIFICATION

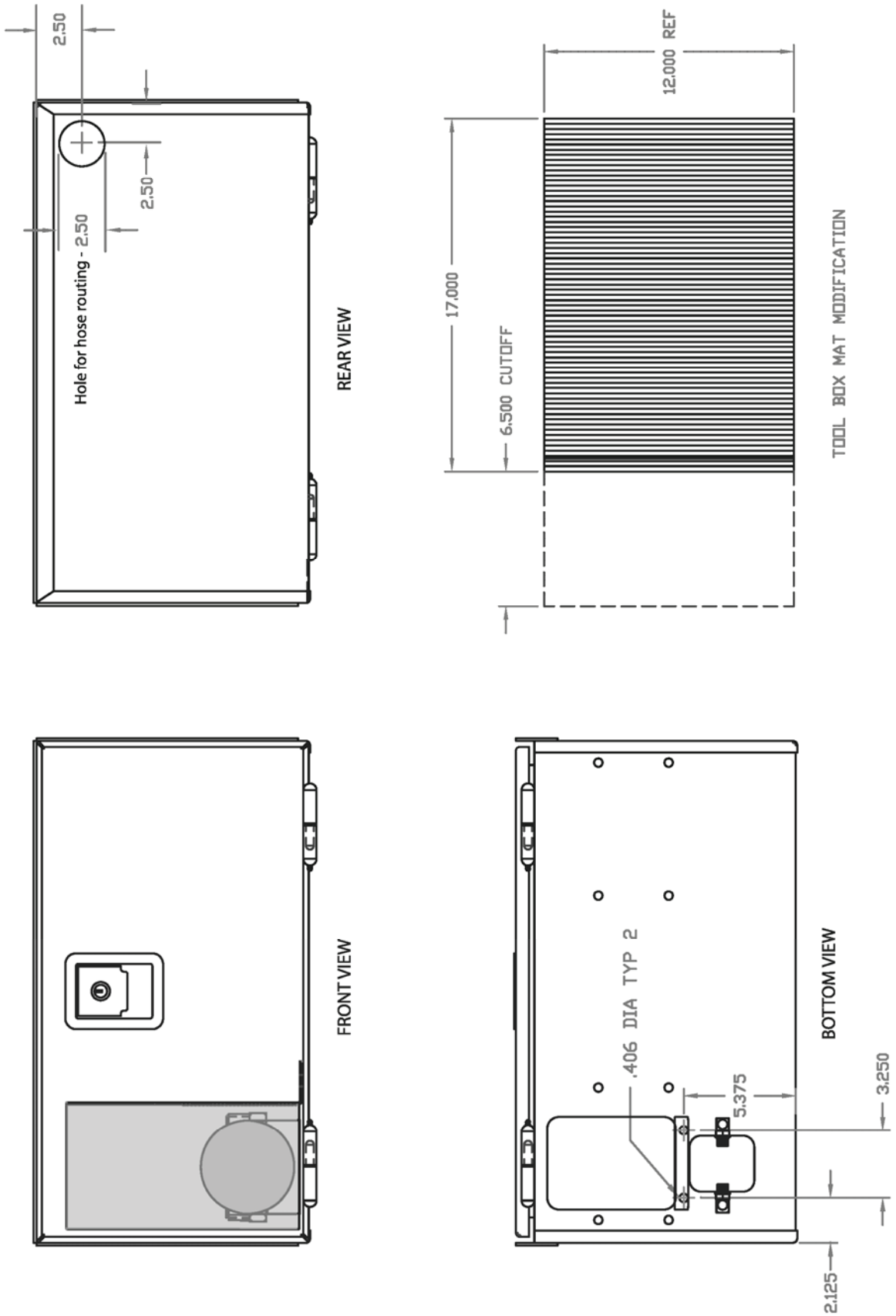

E / H KIT INSTALLATION INSTRUCTIONS

* Read all instructions first.

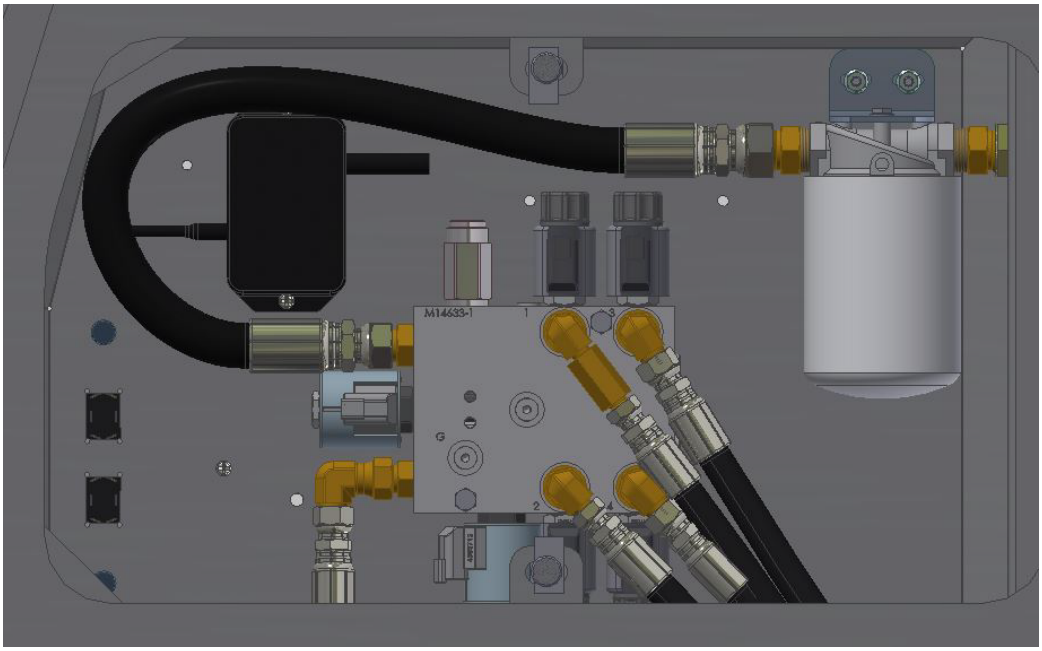

1. Attach adapters to valve and install inside cavity on headache rack.

2. Attach valve harness per diagram on decal.

3. Attach return hose to valve and filter housing. Attach pressure hose from pump.

4. Attach 1/2” hoses from squeeze cylinder to valve ports #3 & #4.

5. Attach 3/8” hoses from lift cylinder to valve ports #1 & #2.

6. Use cover plate to locate cutout in right side toolbox.

7. Use access cover or edge molding to protect hoses.

8. Drill holes for 3/8” bolts as indicated and bolt pump to inside of toolbox.

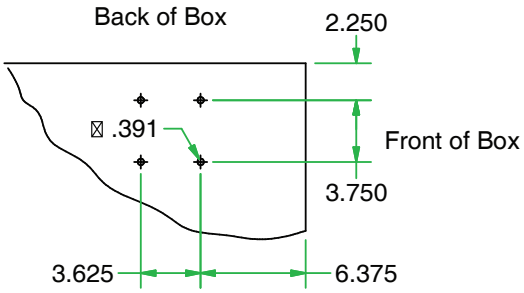

9. Attach power harness as indicated.

10. Attach 30-amp fuse holder to positive terminal on battery, run wire through switch on dash and then to the red wire on the harness.

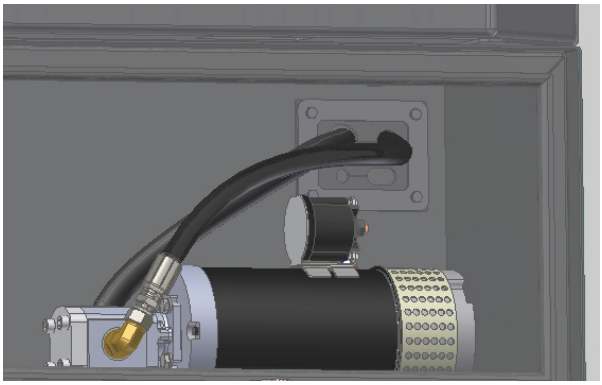

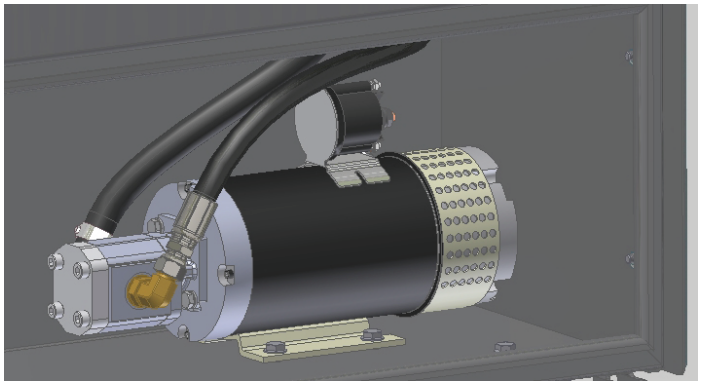

11. Attach suction hose and pressure hose to pump with adapters provided.

12. Attach suction hose to bottom of reservoir.

13. Run battery cables through hole in toolbox and attach to E/H motor as indicated.

14. Run battery cables along frame rail and attach black cable to negative terminal on battery.

15. Attach 200-amp fuse holder to positive battery terminal.

16. Insert 200-amp fuse.

17. Attach red cable from E/H ontop of “ice cube” fuse. Install rubber cap.

If installing the 735021 Switch Unit — Read the E/H Hybrid specific instructions first.

Heavy Duty E/H

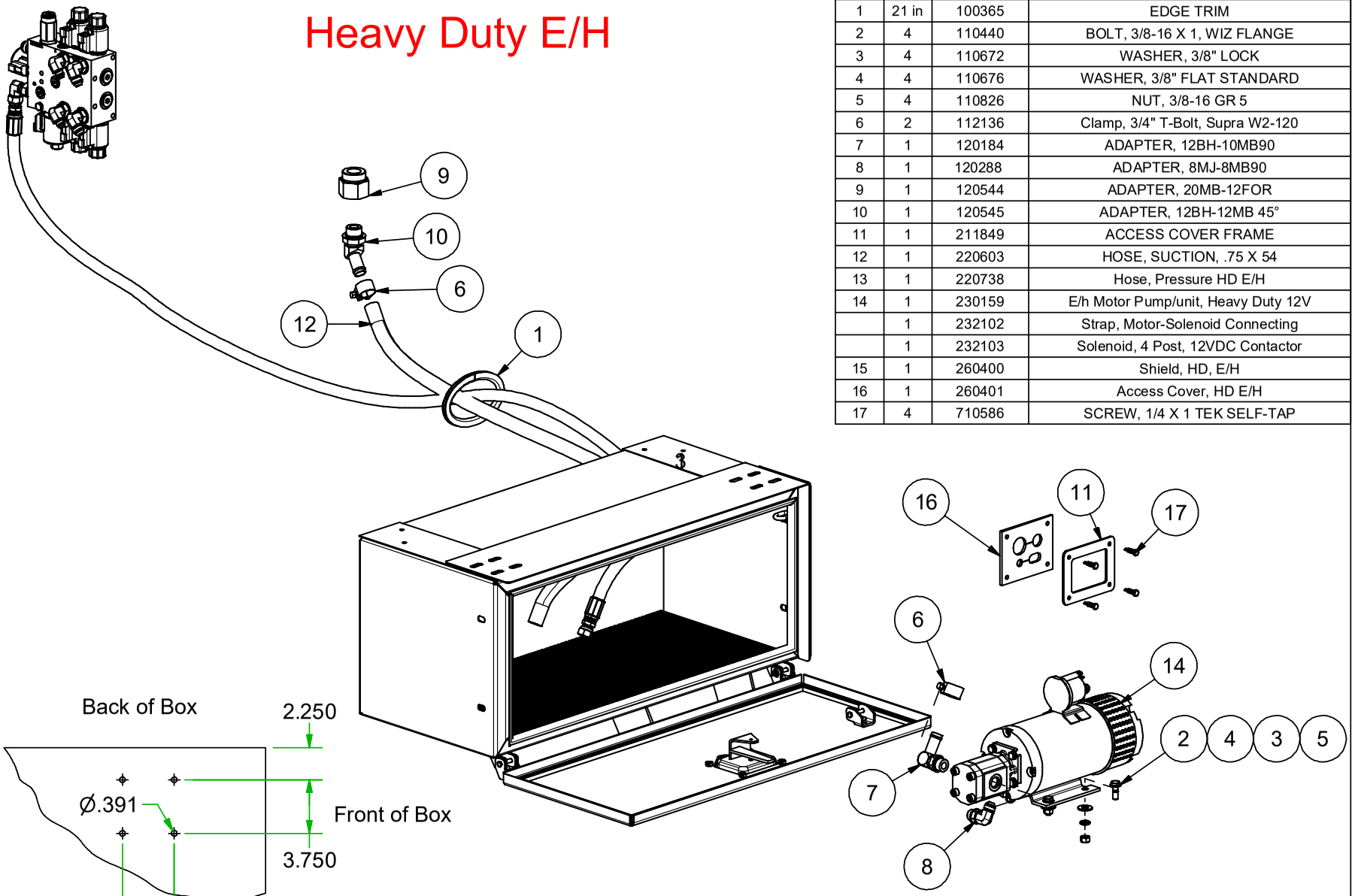

Parts List			
ITEM	QTY	PART #	DESCRIPTION
1	21 in	100365	EDGE TRIM
2	4	110440	BOLT, 3/8-16 X 1, WIZ FLANGE
3	4	110672	WASHER, 3/8" LOCK
4	4	110676	WASHER, 3/8" FLAT STANDARD
5	4	110826	NUT, 3/8-16 GR 5
6	2	112136	Clamp, 3/4" T-Bolt, Supra W2-120
7	1	120184	ADAPTER, 12BH-10MB90
8	1	120288	ADAPTER, 8MJ-8MB90
9	1	120544	ADAPTER, 20MB-12FOR
10	1	120545	ADAPTER, 12BH-12MB 45°
11	1	211849	ACCESS COVER FRAME
12	1	220603	HOSE, SUCTION, .75 X 54
13	1	220738	Hose, Pressure HD E/H
14	1	230159	E/h Motor Pump/unit, Heavy Duty 12V
	1	232102	Strap, Motor-Solenoid Connecting
	1	232103	Solenoid, 4 Post, 12VDC Contactor
15	1	260400	Shield, HD, E/H
16	1	260401	Access Cover, HD E/H
17	4	710586	SCREW, 1/4 X 1 TEK SELF-TAP

4/22/2020

Heavy Duty E/H, W/Remote Part# 205115			
ITEM	QTY	PART #	DESCRIPTION
1	3	110119	NUT, 10-24 LOCK
2	1	110141	NUT, M8 X 1.25 WIZFLANGE
3	3	110264	BOLT, 10-24 X .5 STAINLESS, PHILLIPS
4	2	110538	BOLT, 5/16-18 X 3.0
5	2	110606	NUT, 5/16-18 WIZ FLANGE
6	2	110753	PLUG, 1/2" BUTTON PLASTIC
7	2	120134	ADAPTER, 6MJ-8MB90
8	1	120277	ADAPTER, 8MJ-8MB
9	2	120288	ADAPTER, 8MJ-8MB90
10	1	120368	ADAPTER, 8MJ-8FJX90
11	1	120493	ADAPTER, 10MJ-8MB
12	1	132001	FUSE HOLDER, ATC, 14 GA., MINI
13	1	132002	FUSE, MINI 30 AMP
14	2	132035	SWITCH BOOT
15	1	132044	Switch, Spst, Rocker Led
16	1	132092	FUSE COVER, BUSS CFCOVER-1R
17	1	132093	FUSE HOLDER, BUSS CFBAR1-M8XSP
18	2	132094	FUSE 200 AMP, BUSS MRBF-200
19	2	132127	Switch, Toggle, DPDT, (On)-OFF-(ON)
20	1	202003	DECAL, SWITCH IDENTIFICATION
21	1	202052	Decal, Double Poppet Valve
22	1	202053	Decal, Wiring Diagram, Double Poppet Deutsch
23	1	223044	Flatbed Valve, Small, Monoblock Ver II
24	1	230155	BATTERY CABLE, 2GA TWIN LEAD, 186"
25	1	232098	Harness, Flatbed, Double Poppet Deutsch
26	1	232115	Harness, Flatbed Valve, E/H Control
27	1	233003	Transmitter & Receiver, Kar-Tech

Mini Relay SPDT 12V
530111

Heavy Duty E/H Kit
W/ Remote

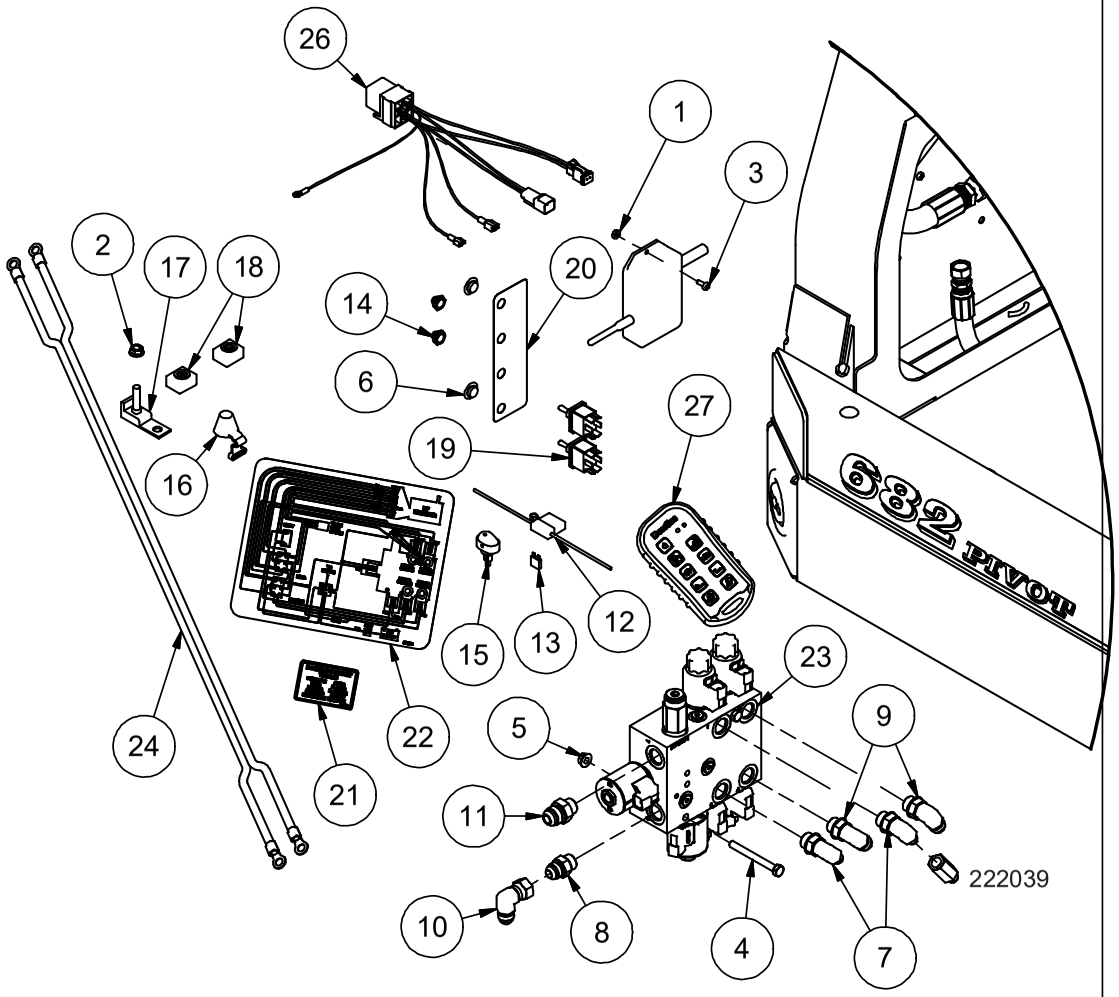

4/22/2020

Heavy Duty E/H, W/Hand Control Part# 205116			
ITEM	QTY	PART #	DESCRIPTION
1	3	110119	NUT, 10-24 LOCK
2	1	110141	NUT, M8 X 1.25 WIZFLANGE
3	3	110264	BOLT, 10-24 X .5 STAINLESS, PHILLIPS
4	2	110538	BOLT, 5/16-18 X 3.0
5	2	110606	NUT, 5/16-18 WIZ FLANGE
6	2	110753	PLUG, 1/2" BUTTON PLASTIC
7	2	120134	ADAPTER, 6MJ-8MB90
8	1	120277	ADAPTER, 8MJ-8MB
9	3	120288	ADAPTER, 8MJ-8MB90
10	1	120368	ADAPTER, 8MJ-8FJX90
11	1	120493	ADAPTER, 10MJ-8MB
12	1	132001	FUSE HOLDER, ATC, 14 GA., MINI
13	1	132002	FUSE, MINI 30 AMP
14	2	132035	SWITCH BOOT
15	1	132044	Switch, Spst, Rocker Led
16	1	132092	FUSE COVER, BUSS CFCOVER-1R
17	1	132093	FUSE HOLDER, BUSS CFBAR1-M8XSP
18	2	132094	FUSE 200 AMP, BUSS MRBF-200
19	2	132127	Switch, Toggle, DPDT, (On)-OFF-(ON)
20	1	150044	Hand Control & Cable Assy, 2 Bank
21	1	202003	DECAL, SWITCH IDENTIFICATION
22	1	202052	Decal, Double Poppet Valve
23	1	202053	Decal, Wiring Diagram, Double Poppet Deutsch
24	1	223044	Flatbed Valve, Small, Monoblock Ver II
25	1	230155	BATTERY CABLE, 2GA TWIN LEAD, 186"
26	1	232098	Harness, Flatbed, Double Poppet Deutsch
27	1	232105	Harness, Adapter 2 Bank, Hand Control
28	1	232115	Harness, Flatbed Valve, E/H Control

Mini Relay SPDT 12V
530111

Heavy Duty E/H Kit W/ Hand Control

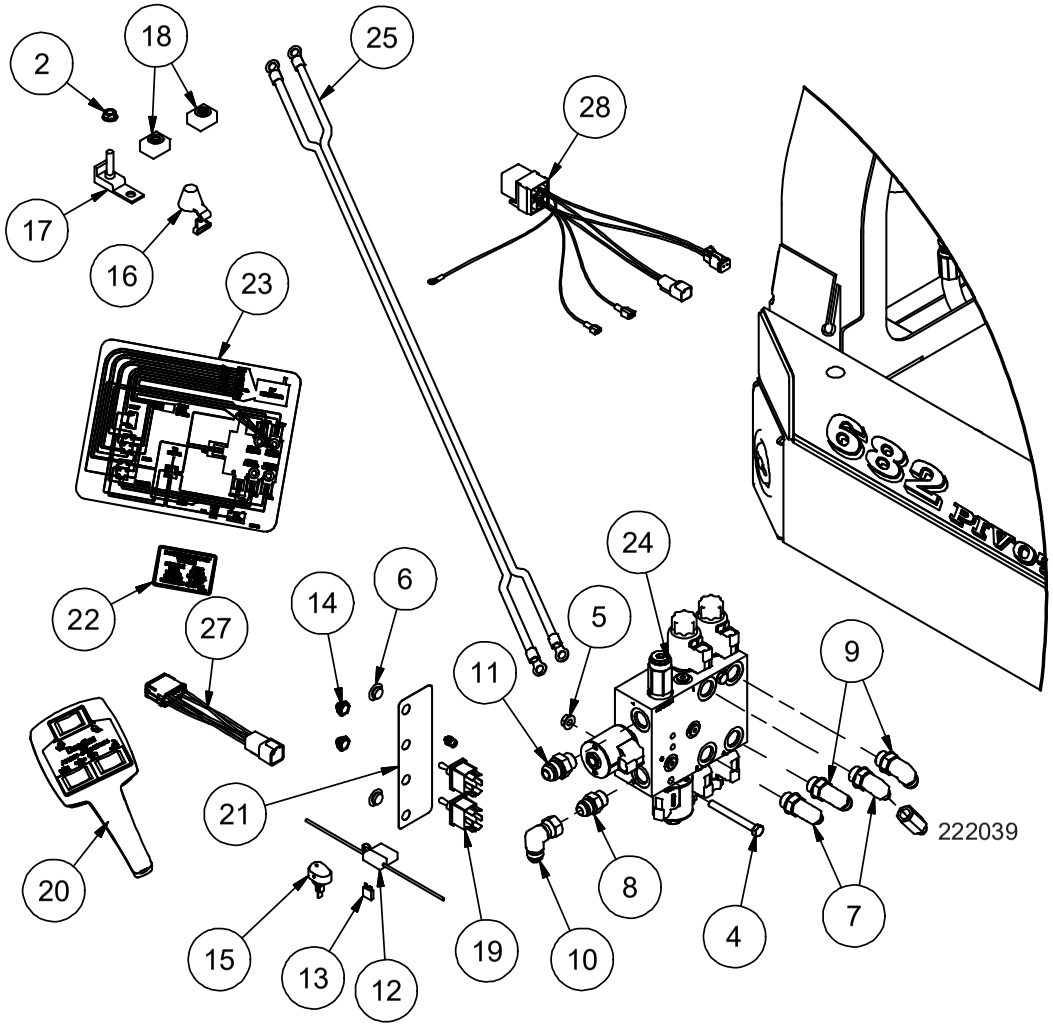

4/22/2020

Flatbed Valve -08 Hydac Deutsch Service Parts

Flatbed Valve, Small, Hydac Deutsch P/N 223044			
ITEM	QTY	PART #	DESCRIPTION
1	3	120062	O-Ring Plug, #4 7/16-20
2	1	222004	Valve, Pressure Relief
3	4	222010	Cartridge, #8 HYDAC Double Poppet
4	1	222045	#10 SOLENOID, 2 POSITION 4 WAY
5	4	222059	Coil, #8 Hydac, DT04-2P Suppressed
6	2	720164	O-Ring Plug, #8 3/4-16
7	1	820232	Spool, #10 Valve
8	2	922119	Coil, #10 Hydraforce, DT04-2P Suppressed

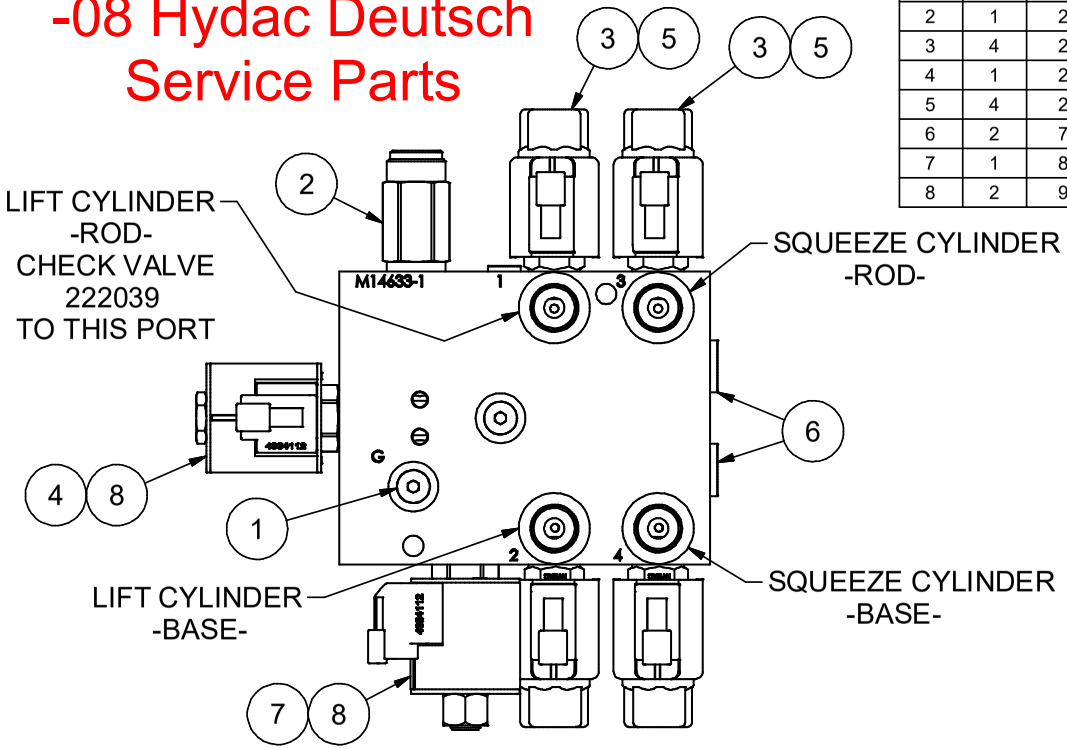

Heavy Duty E/H Motor & Pump

230159 E/H MOTOR & PUMP, HD 12V			
ITEM	QTY	PART #	DESCRIPTION
1	1	232102	Strap, Motor-Solenoid Connecting
2	1	232103	Solenoid, 4 Post, 12VDC Contactor

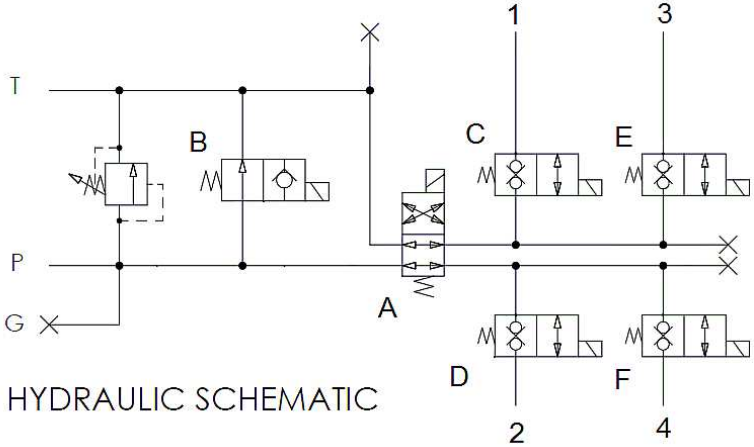

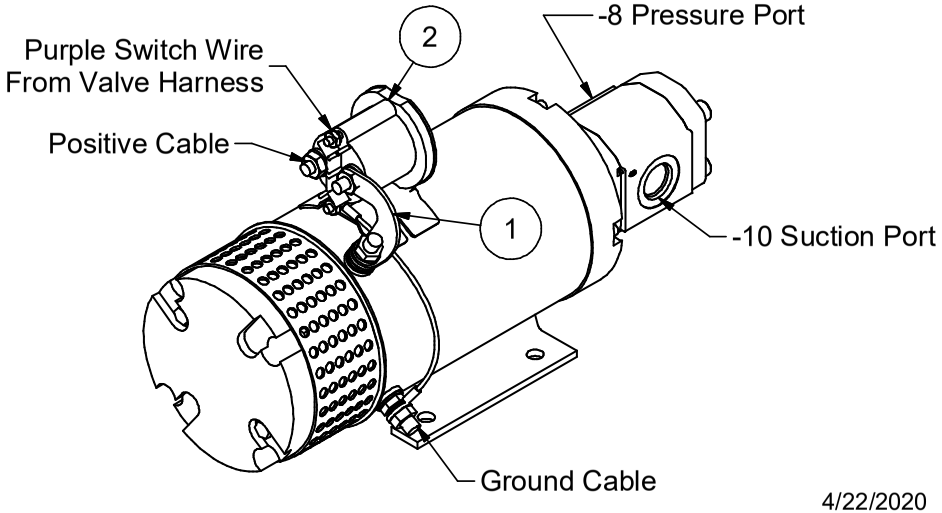

4/22/2020

Controlling E/H Solenoid From Flatbed Harness

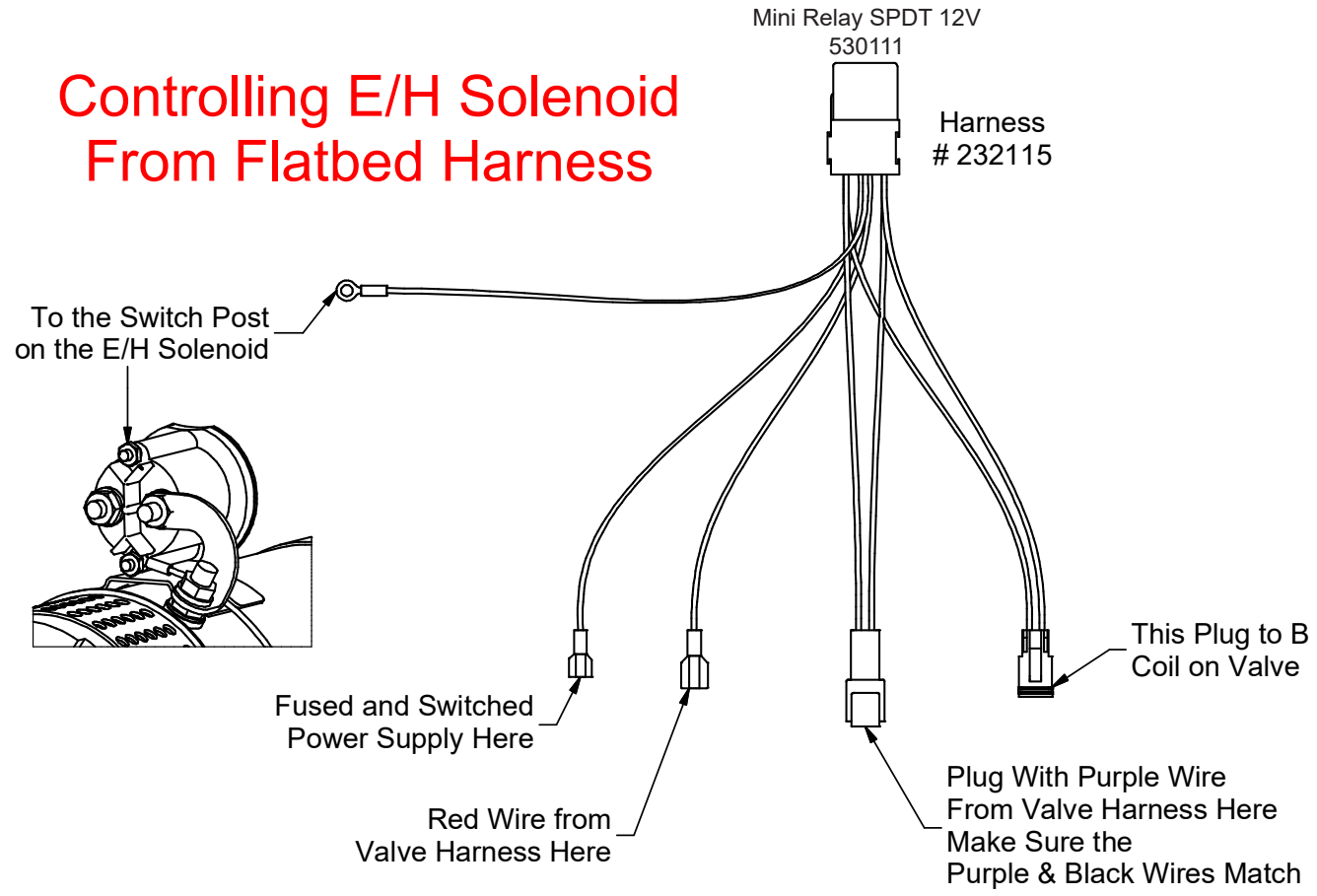

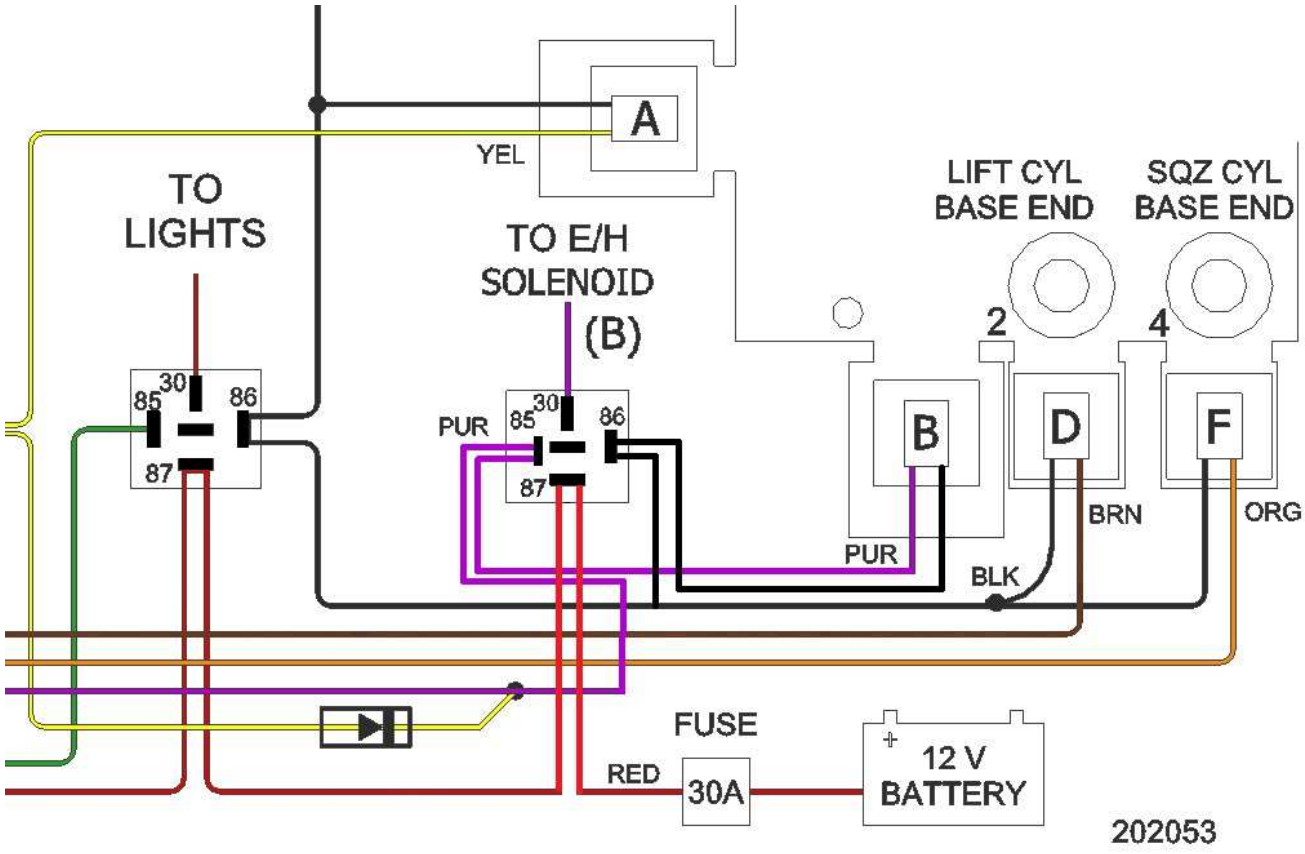

4/22/2020

2 Bank Wiring, Kar-Tech Remote

Gen 3 Double Poppet, Deutsch

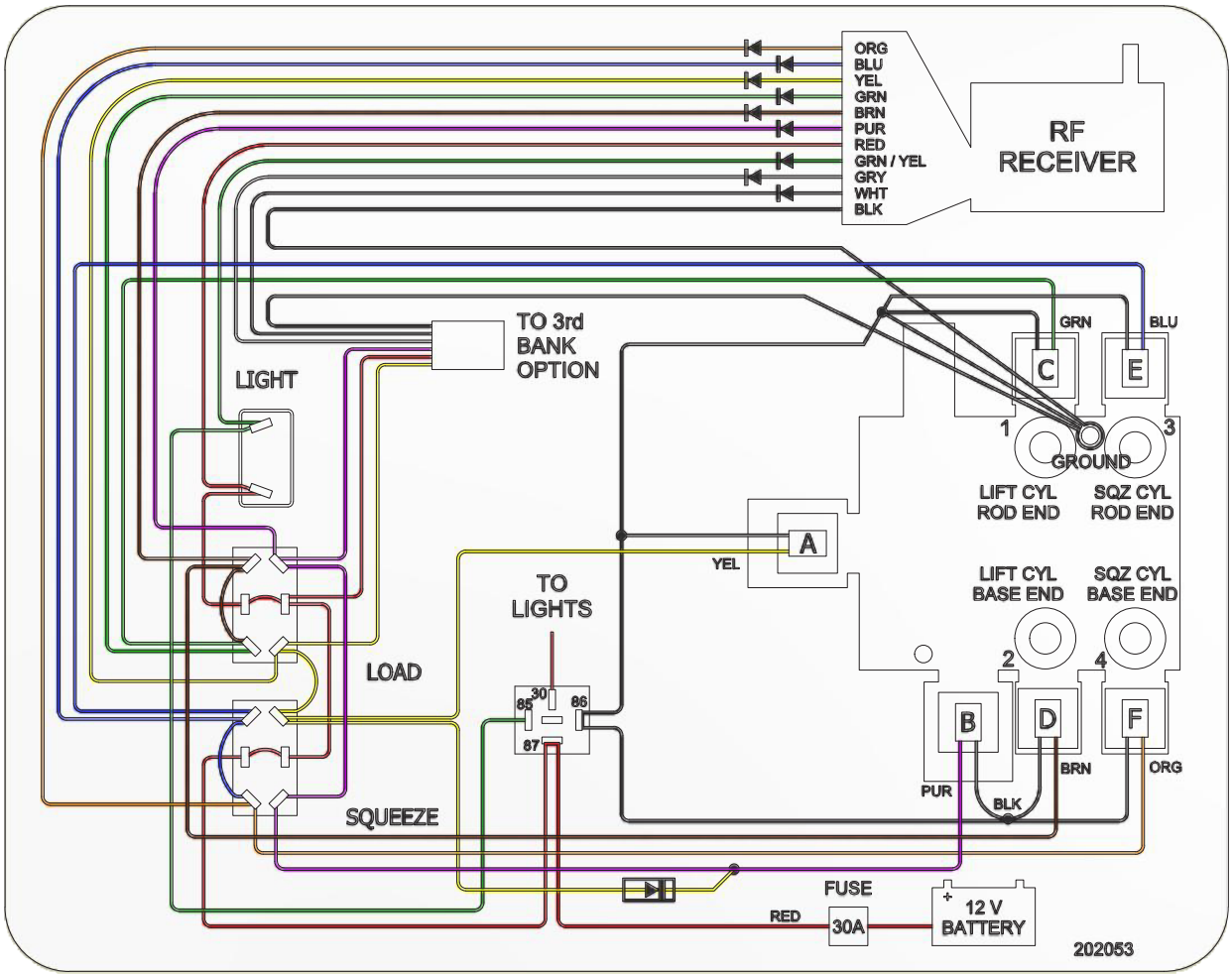

Decal Part# 202053

Harness Part# 232098

Mini Relay SPDT 12V
530111

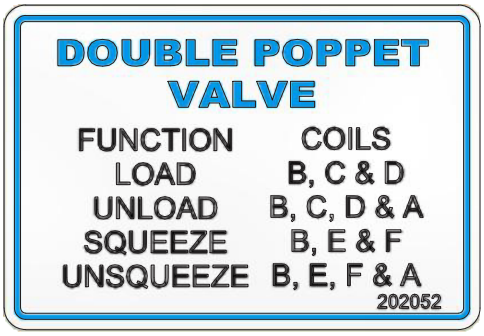

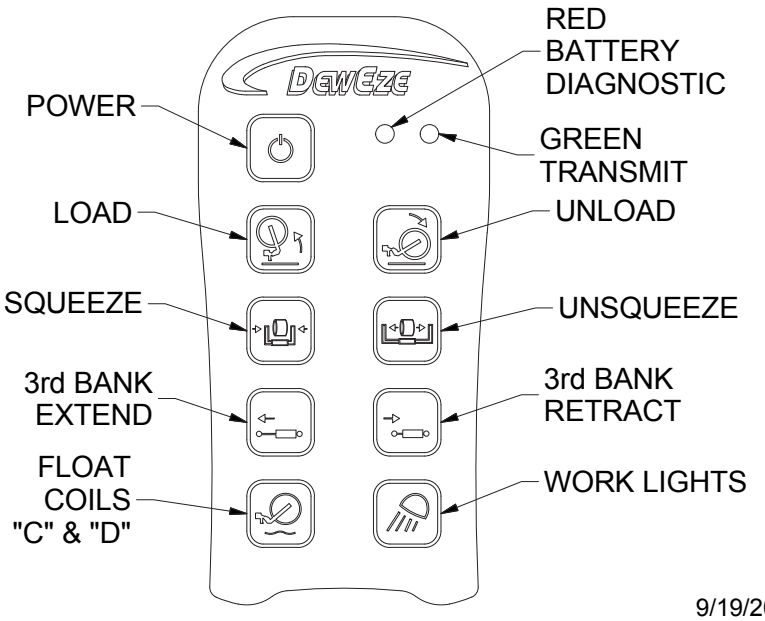

PAGE 1 OF 2

9/19/2014

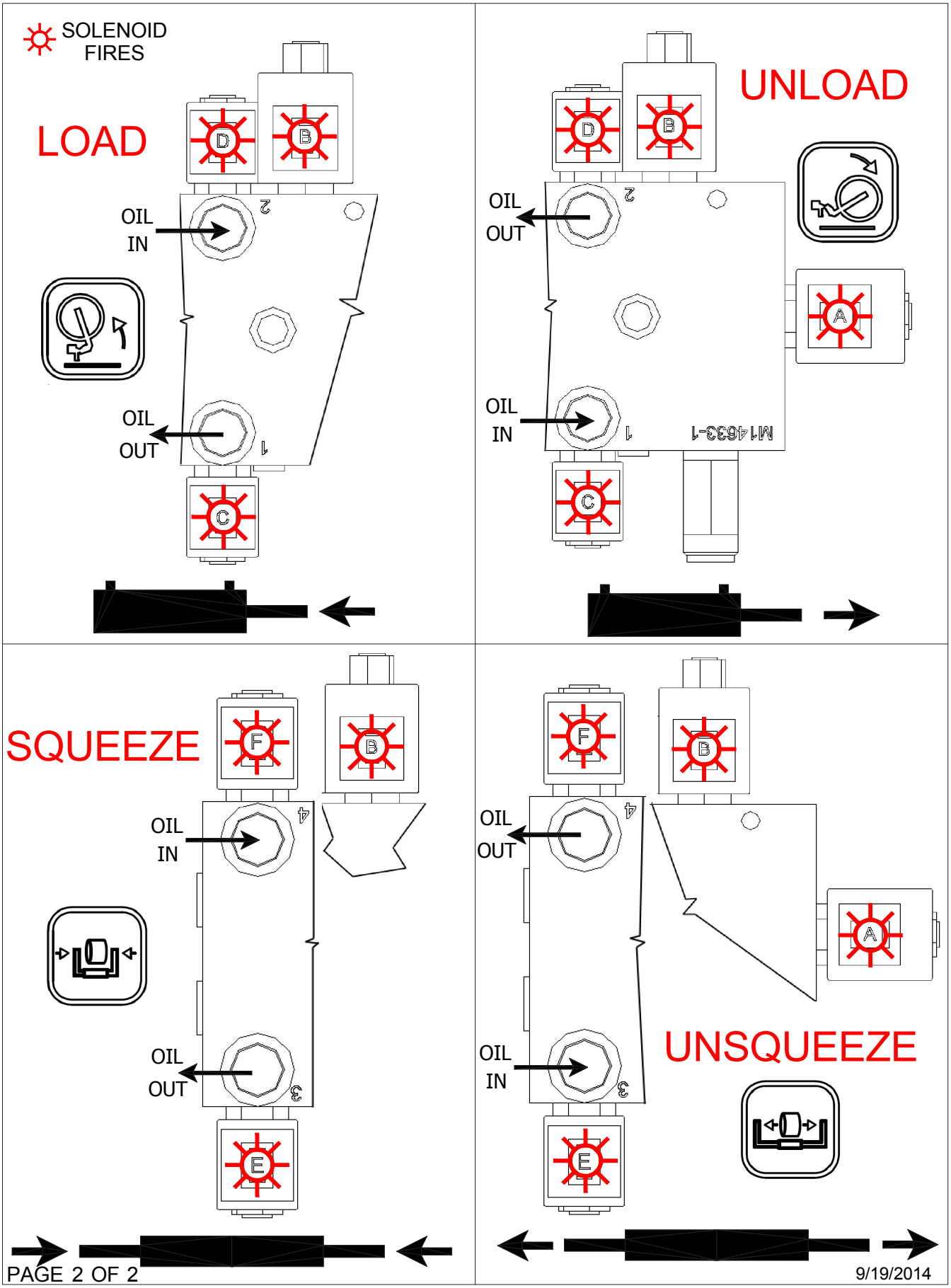
SOLENOID FIRES
LOAD
OIL IN
OIL OUT
UNLOAD
OIL OUT
OIL IN
M14633-1
SQUEEZE
OIL IN
OIL OUT
UNSQUEEZE
OIL OUT
OIL IN
PAGE 2 OF 2
9/19/2014

3rd Bank Wiring, Kar-Tech Remote

Gen 3 Double Poppet, Deutsch

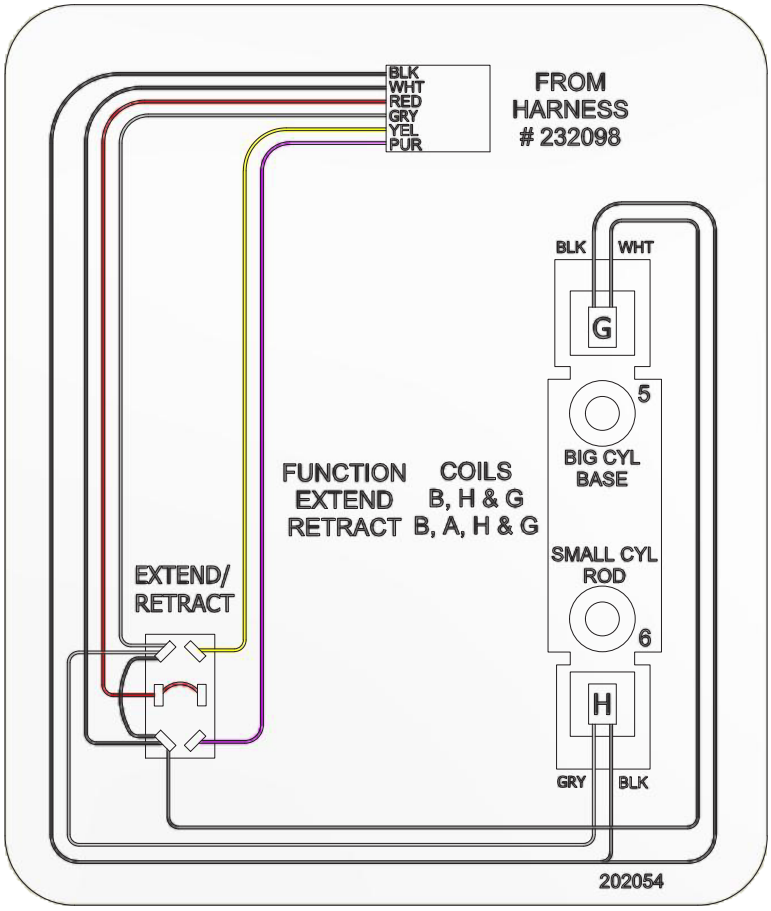

Decal Part# 202054 Harness Part# 232099

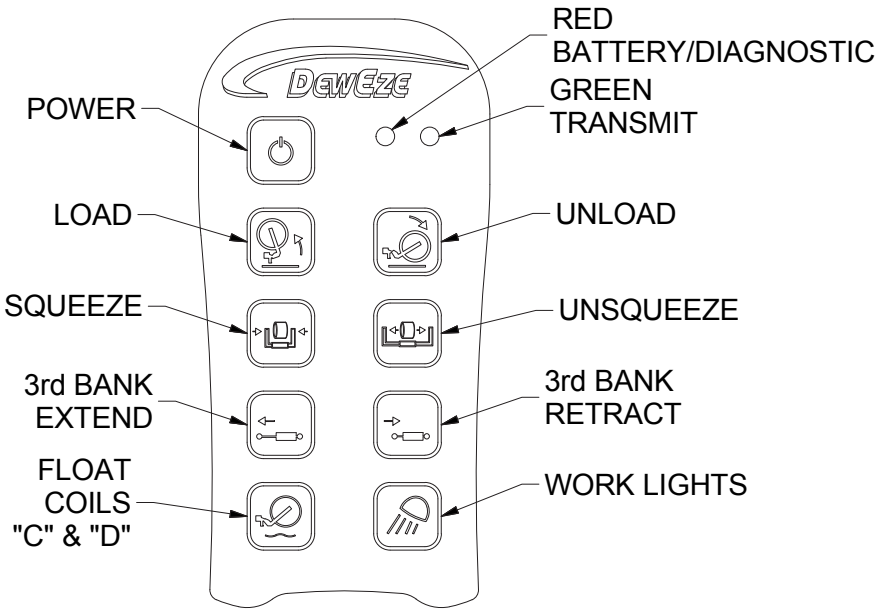

9/19/2014

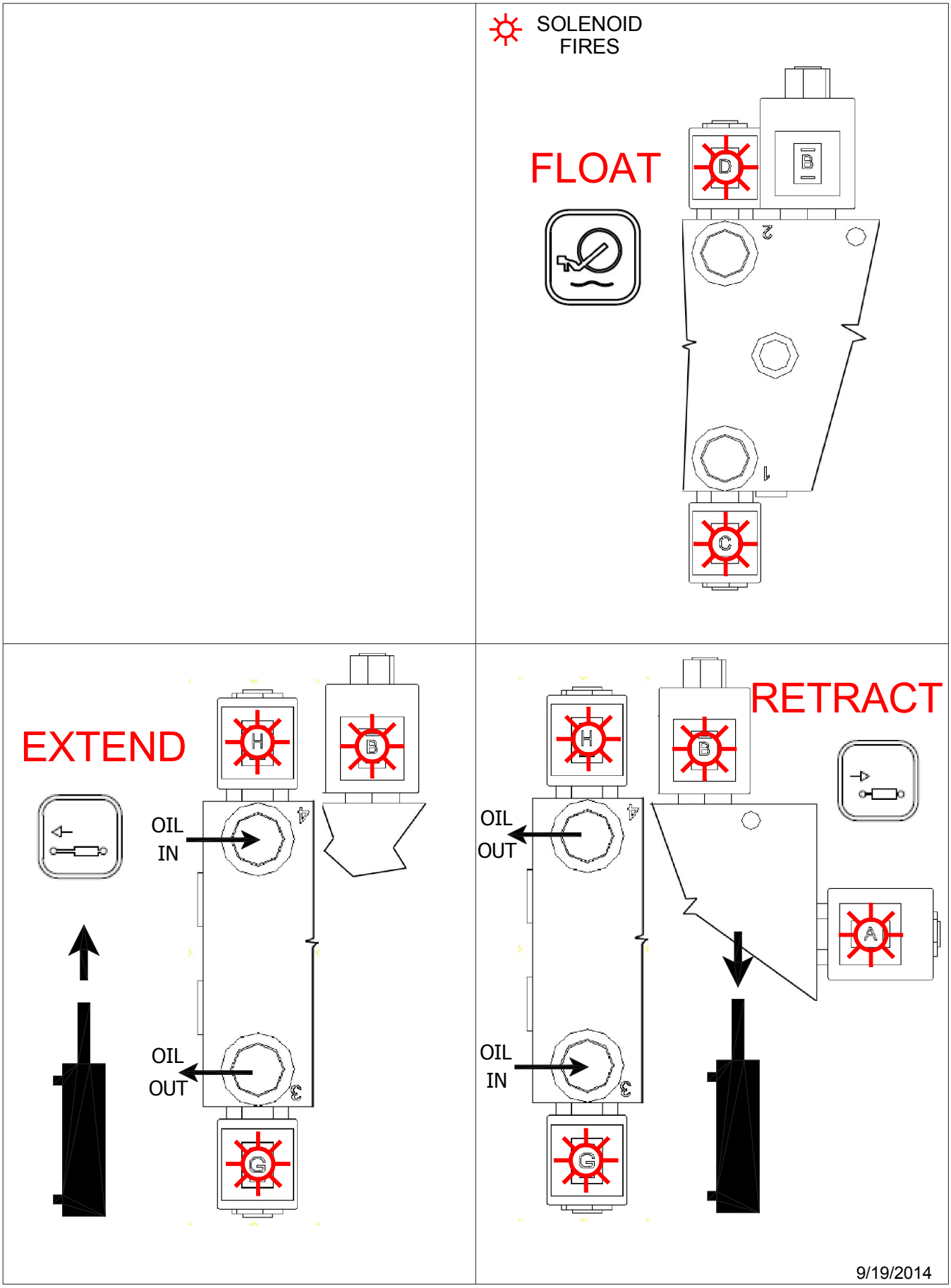
SOLENOID FIRES
FLOAT
D
B
C
2
1
EXTEND
H
B
G
4
3
OIL IN
OIL OUT
RETRACT
H
B
A
G
4
3
OIL OUT
OIL IN
9/19/2014

XRM Adapter Update

Kit # 205068

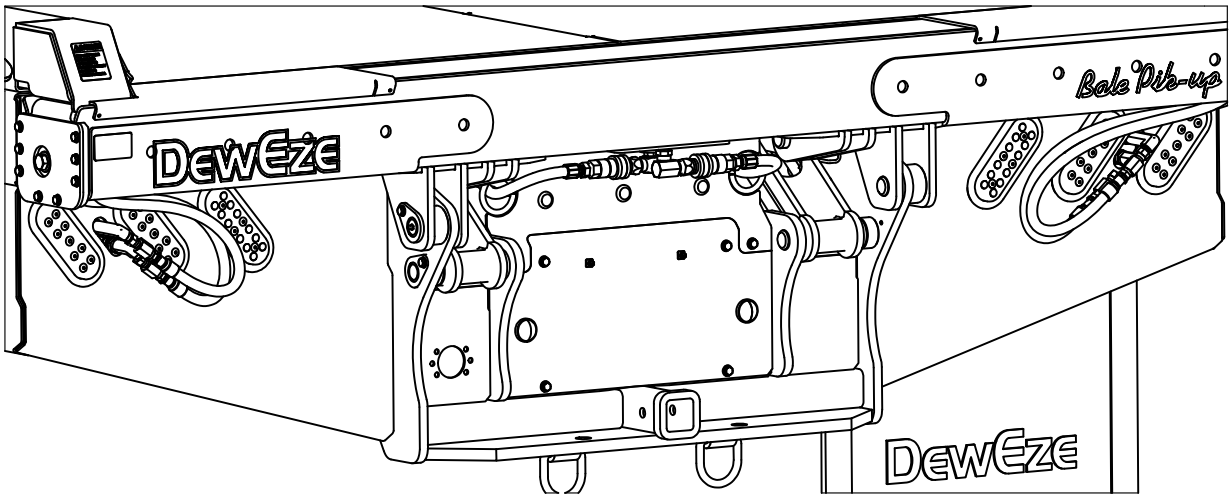

Parts List			
ITEM	QTY	PART #	DESCRIPTION
1	6	100578	Cable Tie 14" Black 50 Lb Tens
2	4	120123	ADAPTER, 6FP-6FJX
3	2	120271	ADAPTER, 6MP-6FPX
4	2	120596	ADAPTER, 6MJ-6MP LONG 90
5	2	120597	ADAPTER, 6MJ-6MP XX-LONG 90

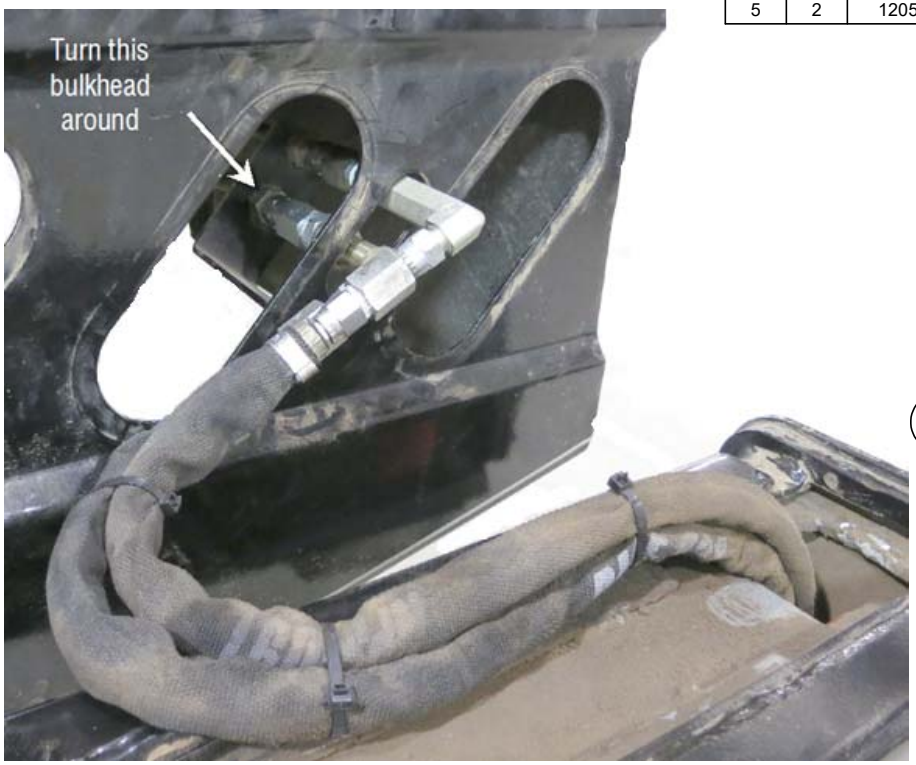

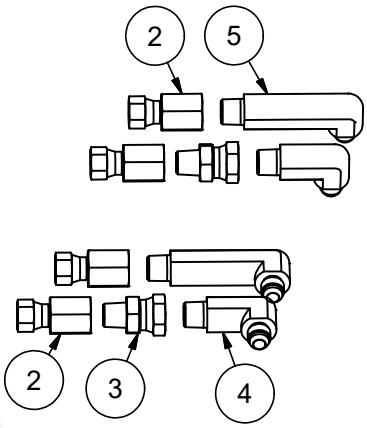

5/11/2012

NOTES

Harper Industries, Inc.
151 E. Highway 160
Harper, KS 67058

Telephone: 620-896-7381
Toll-Free: 800-835-1042
Fax: 620-896-7129

Website: www.harperindustries.com

E-mail: info@harperindustries.com