# 600/700 SERIES

## PARALLEL SQUEEZE

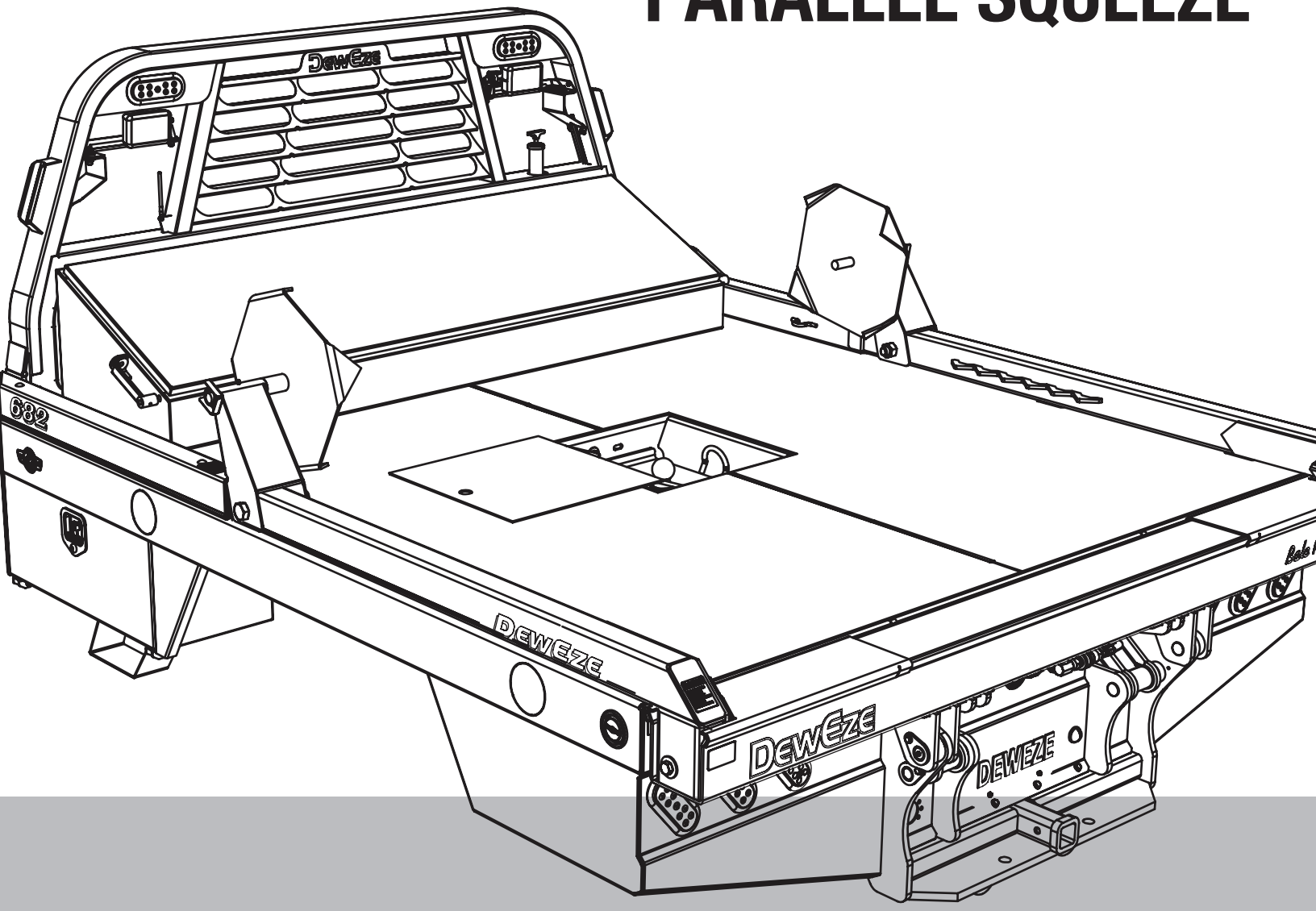


DewEze®

9-2025

HARPER INDUSTRIES INC

**Thank you for purchasing a DewEze Flatbed.**

**TO THE OWNER OR OPERATOR:**

As with all Harper products, the 600 and 700 Series Flatbeds have been thoroughly tested and built to provide a sturdy, dependable product. The Flatbed is equipped with live hydraulics, which allows it to be used for a wide range of lifting and hauling tasks. This manual is written as an aid to operating and maintaining the DewEze Flatbed. Read and understand the manual thoroughly before operation to avoid damage to the unit or injury to the operator or bystanders.

A Flatbed can present hazards to an operator who follows unsafe procedures in either the operation or maintenance of the unit. Therefore, **SAFETY WARNINGS** are present at certain locations in the text. Harper Industries is not responsible for accidents or injuries that result from the misuse or lack of maintenance of the Flatbed.

**SYMBOL:** ⚠ **SAFETY WARNING!** ⚠

**MEANING:** Failure to understand and obey this warning may result in injury to you or others. Whenever this symbol is used, please pay very close attention to the information presented, and make sure you fully understand. If you do not, contact your dealer or Harper Industries for clarification.

HARPER INDUSTRIES, INC.

151 E. HWY. 160 Harper, KS 67058
(620) 896-7381 • **Fax** (620) 896-7129
**Toll Free** 800-835-1042
**Email** info@deweze.com
**Website** www.deweze.com

**© 2025 Harper Industries, Inc.**
The Harper and DewEze names and the ATM logo are registered trademarks of Harper Industries, Inc. All other brand and product names are trademarks or registered trademarks of their respective companies.

**Statement of Warranty**

Harper Industries, Inc. (HII) warrants to each purchaser of a new DewEze Flatbed from an authorized dealer or representative, that such equipment is free of manufacturer's defects in workmanship and materials which appear while in normal service for a period of TWO YEARS commencing with delivery to the original user. The Flatbed hydraulic and electrical systems are warranted for a period of ONE YEAR.

The obligation of HII under this warranty is expressly limited, at our option, to replacement or repair at a service facility designated by Harper Industries or at the manufacturing plant in Harper, KS. A part will be replaced after inspection discloses it to have been defective. This warranty does not apply to defects caused by damage or unreasonable use (including failure to provide reasonable and necessary maintenance, or by performing functions without genuine DewEze Flatbed accessories) while in the possession of the consumer.

Warranty is limited to parts, labor and ground freight delivery of replacement parts. Labor for repair to hydraulic and electrical power systems from HII installed with bed purchase/installation is covered under this warranty. HII shall not be liable for the consequential damages of any kind, including but not limited to consequential labor costs or transportation charges in connection with replacement or repair of defective parts.

This warranty does not apply to parts subjected to misuse, abuse, alteration, improper or inadequate maintenance, or normal wear.

Harper Industries makes no warranty with respect to trade accessories. They are subject to the warranties of their respective manufacturers.

ANY IMPLIED OR STATUTORY WARRANTIES, INCLUDING ANY WARRANTY OR MERCHANTABILITY OR FITNESS FOR A PARTICULAR PURPOSE, ARE EXPRESSLY LIMITED TO THE DURATION OF THIS WRITTEN WARRANTY. HII makes no other express warranty, nor is anyone authorized to make any on behalf of HII.

For further information please contact your nearest DewEze Flatbed dealer.

# RECORDS

Date of Purchase _____ / _____ / _____

Dealer's Name _____

Dealer's Phone _____

Serial Number Bed____ _____

Serial Number Pump_ _____

# Table of Contents


**OPERATOR SECTION**

To the Owner or Operator..... 1
Warranty Statement..... 2
Table of Contents..... 3
Specifications..... 4
Feature Identification..... 5
Safety Guidelines
- General Equipment Safety..... 6
- Flatbed Operation Safety..... 6
- Hydraulic Safety..... 7

Operating Instructions
- Beginning Operation..... 7
- Loading..... 7
- Extending (option)..... 7
- Unloading..... 7
- Unrolling..... 8
- Storing the arms..... 8
- Turning System Off..... 8

Maintenance
- Check Daily or Before Use..... 8
- Lubrication..... 8
- Hydraulic Oil..... 9
- Hydraulic System..... 9
- GatorHyde Protective Coating..... 9
- Remote Control..... 9
- Power Unit..... 9
- Troubleshooting..... 10

**PARTS SECTION**

Standard Parts
- Dual Lift Standard Parts..... 14-17
- 600/700 Common Parts..... 18-19
- Parallel Squeeze Crosstube/Arms..... 20
- Squeeze Cylinder Chart..... 21

Hydraulics
- Dual Lift Hydraulic Assembly..... 22-23
- Dual Lift Common Hydraulics-Gen 3..... 24-25
- Dual Lift Hydraulics Valve and Filter..... 26
- Valve and Filter-Gen 3 Double Poppet..... 27
- Valve Service Parts-Gen 2..... 28
- Gen 3 -08 Hydac Deutch 2014..... 29
- Gen 3 -08 Eaton Deutch 2015..... 30
- Gen 3 -08 Hydac Deutch 2016..... 31
- Hydraulic Assembly Reservoir..... 32
- Hydraulic Schematic Non-Proportional..... 33

XRM
- Dual Lift XRM Parts..... 35
- XRM Hydraulics..... 36
- XRM Hydraulics Update 2012..... 37
- XRM Hose Chart & Routing..... 38
- XRM Cylinder Assembly..... 39

Controls and Lights
- RF Control and Manual Switches..... 40
- Clutch Control Switch..... 41
- Hand Control Option..... 42-43
- Lights & Harness 12A01 thru Jun 2018..... 44
- Lights & Harness after Jun 2018..... 45

Decals
- Decals-Safety/Operation..... 46
- 600/700 Series Decals..... 47

Accessories
- Swingout Lights..... 48
- Cargo Lights..... 49
- LED Swingout Lights..... 50
- LED Cargo Lights..... 51
- Harness Adapters..... 52
- Rear View Camera Option..... 53
- Bed Mounting Kits..... 54
- 30” Toolbox & Fender Skirts..... 55
- 20” Toolbox..... 56
- 17” Toolbox..... 57
- 12” Toolbox..... 58
- 770 Toolbox..... 59
- Across the Bed Toolbox..... 60
- Spinners and Risers..... 61
- Other..... 62
- Front Skirt Toolbox Replacement..... 63

Appendices
- I
  - GatorHyde Repair..... 64
- II
  - Remote Control..... 65-66
  - 2-Bank Wiring - Kar-Tech Remote... 67-70
  - 3rd Bank Wiring - Kar-Tech Remote 71-72
  - 2-Bank - Gen 2 w/ Remote..... 73-74
  - 3-Bank - Gen 3 w/ Remote..... 75-76
- III
  - Standard E/H..... 77-84
- IV
  - HD E/H..... 85-95
- V
  - XRM Adapter Update..... 96

# Specifications

DewEze flatbeds are specifically designed to transport and feed round hay bales.

## Model Specifications

| MODEL | 670 | 671 | 675 | 676 | 677 | 679 | 682 | 684 |
|---|---|---|---|---|---|---|---|---|
| WIDTH | 7’ 1” | 7’ 1” | 7’ 1” | 7’ 1” | 7’ 1” | 7’ 1” | 7’ 9” | 7’ 9” |
| LENGTH | 7’ 2” | 7’ 7” | 8’ 6” | 8’ 11” | 9’ 4” | 9’ 8” | 9’ 4” | 9’ 8” |
| WEIGHT | 2020# | | 2070# | 2120# | 2170# | 2220# | 2270# | 2420# |

| 687 | 688 |
|---|---|
| 7’ 9” | 7’ 9” |
| 11’ 6” | 11’ 10” |
| 2540# | 2670# |

| MODEL | 770 | 778 | 776 | 782 | 784 | 787 | 788 |
|---|---|---|---|---|---|---|---|
| WIDTH | 8’ | 8’ | 8’ | 8’ | 8’ | 8’ | 8’ |
| LENGTH | 7’ 2” | 8’ 6” | 8’ 11” | 9’ 4” | 9’ 8” | 11’ 6” | 11’ 10” |
| WEIGHT | 2070# | 2120# | 2195# | 2270# | 2420# | 2540# | 2670# |

*** Length of all flatbeds includes 6” for crosstube.**

**** Add 250 lbs. for extendable arm option.**

## Hydraulic System Specifications

| | |
|---|---|
| **HYDRAULIC** | Powered by engine driven pump or self contained battery-powered electric/hydraulic unit |
| **SYSTEM PRESSURE** | 2450 psi |
| **OIL RESERVOIR CAPACITY** | 10 gallons |
| **OIL FILTER** | Deweze 720043, WIX 51551 (10 micron) |
| **CYLINDER, LIFT (2)** | 3.50” x 16.62” |
| **CYLINDER, SQUEEZE** | 2.00” x 34.00” (670, 675, 676, 677, & 679)<br>2.00” x 35.75” (682, 684, 687, & 688)<br>2.00” x 39.25” (770, 776, 778, 782, 784, 787, & 788) |
| **CYLINDER, EXTENDIBLE*** | 2.00” x 20.0” (left side) |
| **CYLINDER, EXTENDIBLE*** | 2.50” x 20.0” (left side) |

*** Cylinders used for extendible arms are optional.**

## Protective Coating

| | |
|---|---|
| **PAINT** | Heat-treated, polyurethane based paint |
| **GATORHYDE** | Long-lasting, textured polyurea surface |

# Feature Identification

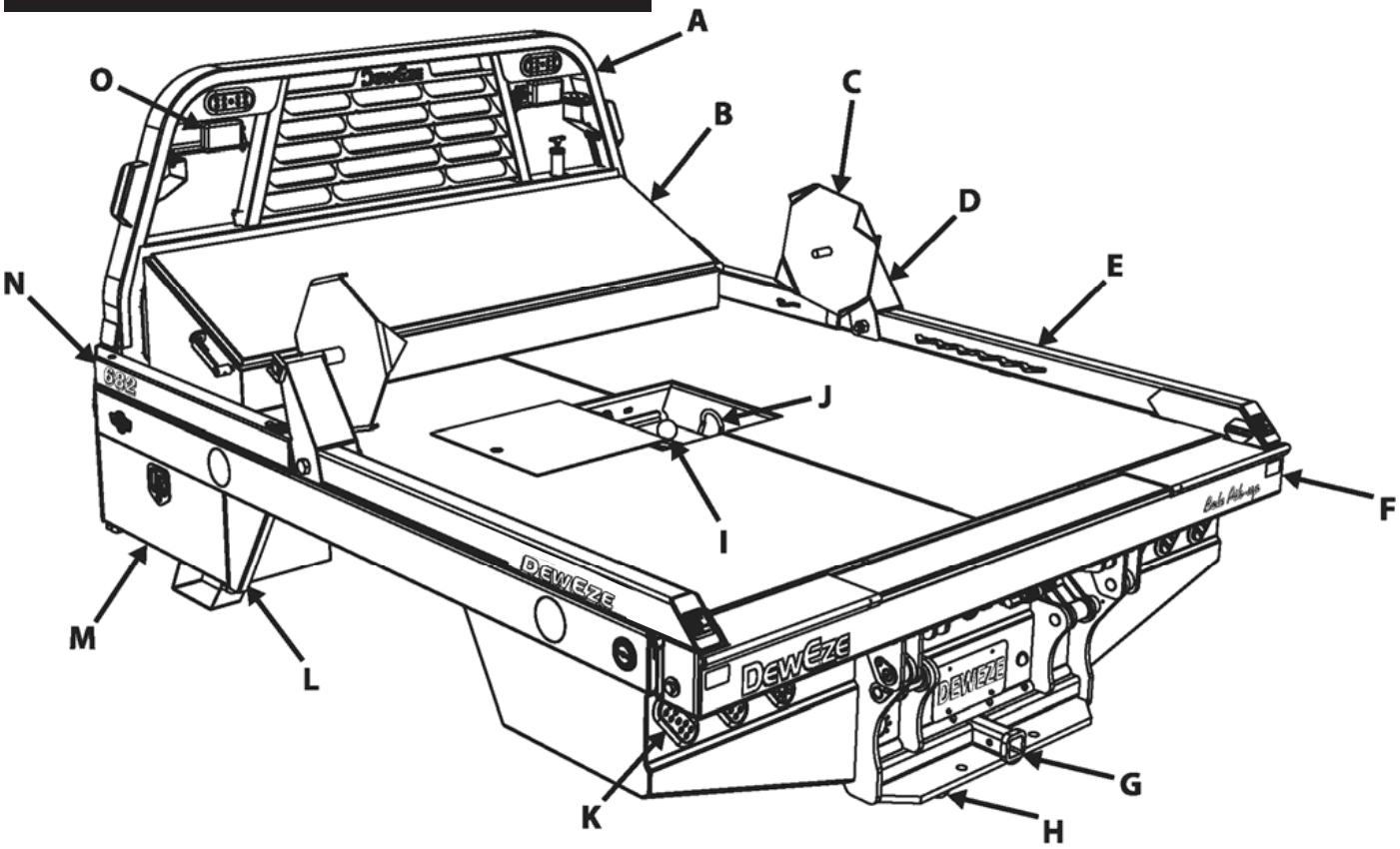


**A. Headache Rack** – protects the rear pickup window. The hydraulic oil tank and valve are located in the headache rack.

**B. Across-the-bed Toolbox (optional) –** measures 78” wide, 15.5” tall and 21.5” deep and has a shelf mounted inside.

**C & D. Spinners & Risers (optional) –** used to unroll hay. The risers allow the hugger arms to lie flat on the bed with the spinners attached.

**E. Hugger Arms –** squeeze together to grip the bale and lift it onto the flatbed. When the arms are stored they serve as side rails for the flatbed.

**F. Crosstube –** houses the squeeze cylinder and guides the hugger arms.

**G. Hitch Plate –** allows for a 2” square receiver hitch and has holes for hitch pins.

**H. Safety Chain Loops –** always use safety chains when towing.

**I. Gooseneck Hitch –** located under a cover plate in the middle of the bed.

**J. Safety Chain Loops –** always use safety chains when towing.

**K. Lights –** LED lighting for stop-tail-turn has long life and low current draw.

**L & M. Skirts & Toolboxes (optional) –** mount under front of bed on both sides. The Electric/Hydraulic Power unit mounts inside the left toolbox.

**N. Dummy Arms –** serve as side rail along with hugger arms.

**O. Swing Lights (optional) –** lights can be pivoted out wider than the bale when working at night.

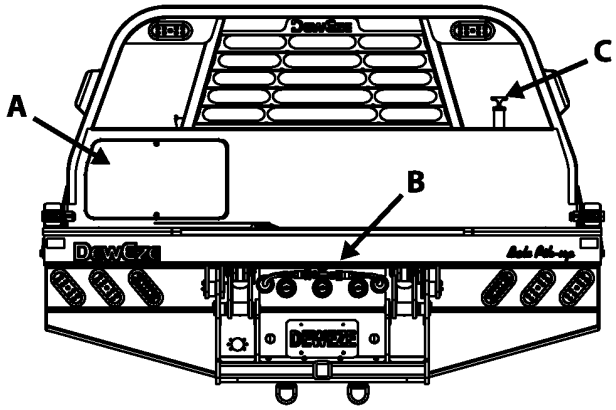


**A. Valve Compartment –** houses the hydraulic control valve, hydraulic oil filter and the radio frequency receiver.

**B. Pioneer Couplers –** connect hydraulic hoses to the squeeze cylinder – may also be used to connect to implements.

**C. Hydraulic Oil Fill & Dipstick –** check hydraulic oil level with dipstick – fill here when necessary.

**Remote Control Transmitter –** operates all functions of the flatbed – uses two AA batteries.

**SAFETY WARNING!**

**Do not stand under the hugger arms when operating the bale pickup unit, even when arms are empty.**

# Specifications

Operator safety is of upmost concern when designing and developing a new piece of equipment. Designers and manufacturers build in as many safety features as possible. However, every year many accidents occur which could have been avoided by a few seconds of thought and a more careful approach to handling equipment. Most accidents can be avoided by observing the precautions in this section. To avoid personal injury, study the safety warnings and cautions listed in this manual and follow them.

**General Equipment Safety**

- This equipment can be dangerous to children and persons unfamiliar with its operation. The operator should be a responsible adult familiar with farm machinery and trained for this unit.
- Do not attempt to operate equipment under the influence of drugs or alcohol.
- Do not allow persons to operate or assemble this unit until they have read this manual and have developed a thorough understanding of the safety precautions and how the unit works.
- Review the safety warnings and cautions with all users annually.

If you have any questions not answered in this manual or require additional copies, contact your dealer or Harper Industries.

**Flatbed Operation Safety**

- Replace any CAUTION, WARNING, DANGER or instruction decal that is not readable or is missing.
- Make sure all safety pins are in place and flatbed mounting bolts are secure to the truck frame.
- Make sure hinges, joints, and sliding parts are well greased, especially during off season to prevent rusting and binding.

- Check with truck dealer for any load limits, additional suspension or tire requirements. The flatbed's lifting capability may exceed the truck's load capacity in some instances.

**Hydraulic Safety**

- Do not operate the hydraulic system with the hood open.
- Do not activate the electric clutch unless the truck engine is at idle. Operating the clutch at road speeds can damage the hydraulic system.

**SAFETY WARNING!**

**Hydraulic system operates under high pressure and escaping fluid can penetrate the skin.**

# Operating Instructions

**Beginning Operation**

- Turn the pump switch on the dash to the "ON" position. (Red light will indicate that pump is on).

**CAUTION**: In cold weather, let engine idle for 5-10 minutes with pump on before operating arms to warm oil. Neglecting to do so may cause hydraulic pump failure.

- Press and hold the power button on the transmitter until both LEDs turn on, then release.
- The green LED will flash rapidly when the communication has been established. If the receiver is off, the red LED will flash slowly.
- Press the corresponding buttons on the transmitter keypad to turn on and off each of the outputs.

**Loading**

- Back truck against bale with the arms wide apart and tilted slightly upward.
- Squeeze arms firmly against the bale.
- Lift the bale onto the truck.
- Release the bale and repeat the operation for the second bale.

**CAUTION**: When hauling one bale, make sure it is held tightly and rests on the bed. When hauling two bales make sure the second bale is as far forward as possible (Fig. 1). Carrying a bale behind the bed, as show in Fig 2, places excessive stress on the cylinder, linkage, and pins.

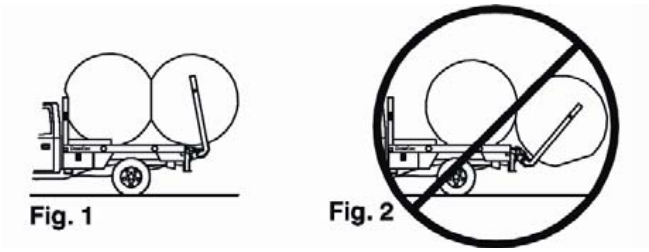


**CAUTION**: Do not exceed GVRW rating of truck when loading.

**Extending (option)**

- Always squeeze the bale with the arms in the retracted position.
- Extend the arms and release the bale.
- Fully retract the arms before laying them on the bed.

**CAUTION**: Squeezing the bale when the arms are extended puts excessive force on the arms and cross-tube and may result in bending the unit.

**Unloading**

- To unload, do the reverse of the loading operation.
- Spinners may sometimes be needed to grip the front bale for unloading.

**Unrolling (option)**

- Use risers and spinners to unroll a bale.
- Position the arms over the bale so the spinners are at the center of the bale.
- To unroll, lower the bale to the ground.
- Turn the pump off and push the FLOAT switch on the remote control.
- Slowly drive STRAIGHT forward. The bale will gradually unroll.

**CAUTION**: Turning while unrolling a bale may cause hugger arms to bend.

**CAUTION**: Failure to use FLOAT while unrolling may damage flatbed frame or lift cylinder. The FLOAT switch on the remote transmitter stays on until it is pressed a second time or another switch is activated. To avoid power loss, always deactivate the FLOAT when not in use.

**Storing the Arms**

- Close the arms partially and lay them on the flatbed.
- Open the arms until they are flush with the side of the bed. They now function with the dummy arms as side rails.

**Turning System Off**

- Turn the pump off when it is not in use.
- The remote control turns itself off automatically after 10 minutes.

**CAUTION**: Operating truck at road speeds or above 2,000 RPM with pump engaged may cause hydraulic pump failure.

# Maintenance

**Check Daily or Before Use**

- Check the hydraulic oil level. Keep the level to “FULL” on the dipstick.
- Check the belt, belt tensioner and idler pulleys on engine clutch pump system.
- Examine the hydraulic hoses for leaks with an object such as cardboard.

**SAFETY WARNING!**

**Hydraulic fluid escaping under pressure can penetrate the skin and may cause death if not treated immediately.**

**Lubrication**

Grease the locations indicated in the illustrations below once per week while the unit is in use and at the end of each season (same locations on right and left).

1. Lift cylinder – rod end
2. Cross-tube hinge
3. Idler arm base
4. Idler link pin

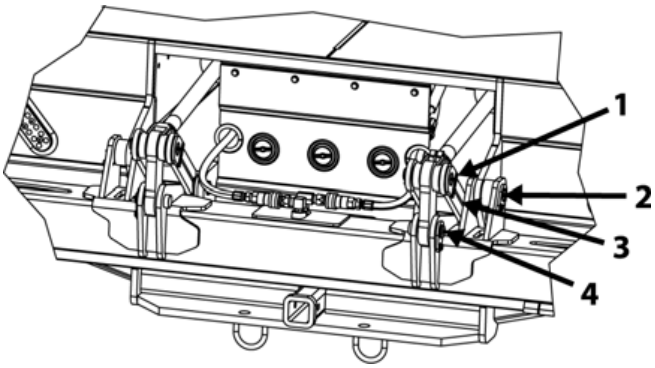


**SAFETY WARNING!**

**Use extreme caution when greasing the flatbed. Completely lower arms to expose rear zerks and turn off ignition.**

5. Riser (option)
6. Lift cylinder – base end

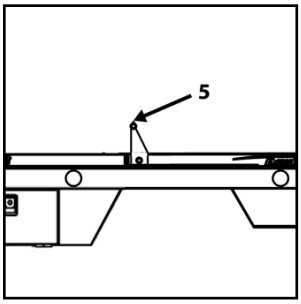


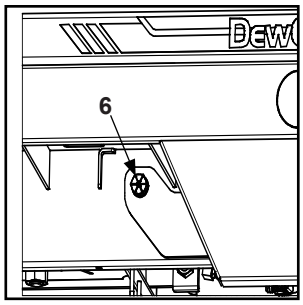

## Hydraulic Oil

- Hydraulic fluid selection will affect the performance of the hydraulic system.

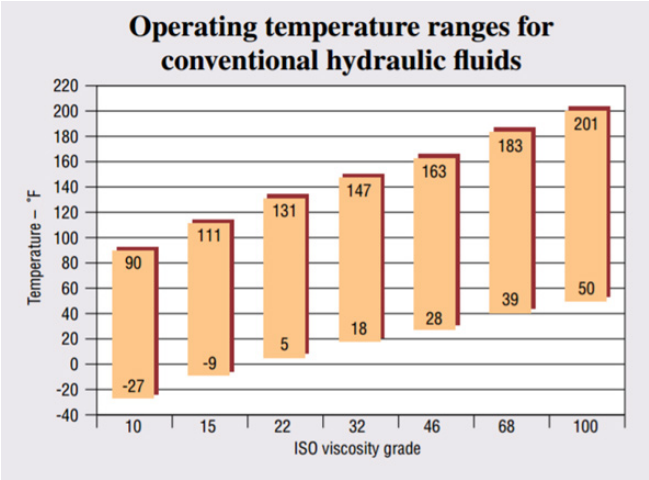


- Consult your local oil supplier for help in selection of a hydraulic fluid appropriate for your area. Consideration will also need to be given as to whether the system is a clutch pump or electric over hydraulic.
- Change the hydraulic oil filter after the first 40 hours of use and then every 250 hours, or annually thereafter.
- Change the hydraulic oil if it becomes contaminated or turns milky in appearance.
- If other hydraulic equipment is connected to the system, the oil will intermix and cold weather viscosity may be lost.

## Hydraulic System

- If the quick-couplers leak, the o-rings may need to be replaced.
- High heat, 190° or greater, can be damaging to the hydraulic system. Feel various parts of the system to make sure there are no “hot spots” which may indicate a problem.
- In the off season, run the bed at least twice a month to prevent valve condensation.
- For easy hookup of the couplers, turn the pump switch off and activate the control valve switches with the ignition on. This will release pressure in the lines.

## GatorHyde Protective Coating

- In the event that damage should occur to the GatorHyde protective coating, repair materials are available from your DewEze dealer to fix small areas. Follow the instructions provided in Appendix I.

## Remote Control

- The remote control transmitter has two LED indicators, the green TRANSMIT indicator and the red BATTERY / DIAGNOSTIC indicator.
- The green TRANSMIT indicator flashes rapidly whenever there is communication between the transmitter and the receiver.
- The red BATTERY / DIAGNOSTIC indicator starts blinking once every second when the battery voltage is low and requires replacement. It also blinks when there is a problem with the system in the form of an error code. Refer to the ERROR CODE CHART in Appendix II.
- To synchronize a new transmitter and receiver together, refer to the TEACH ID CODE instructions in Appendix II.

## Power Unit

- If the flatbed is powered with a DewEze Under-the-Hood hydraulic system, refer to the following chart when troubleshooting.
- See Appendix III if the flatbed is powered with the Electric/Hydraulic power unit.

## Troubleshooting

| Problem | Symptom | Possible Solutions |
|---|---|---|
| Hydraulic Pump | No Oil Flow | • CHECK OIL LEVEL IN RESERVOIR. If oil level is low, check for leaks in system then re-fill to FULL.<br>• CHECK BELT TENSION. Replace tensioner or tighten idlers if needed. Replace belt if worn.<br>• CHECK FOR SHEARED KEY ON PUMP SHAFT. Replace key.<br>• CHECK IF SUCTION HOSE COLLAPSES IN SUCTION. Locate and remove obstruction.<br>• CLUTCH NOT FUNCTIONING. See possible clutch solutions.<br>• INTERNAL PUMP DAMAGE. **Seek assistance from dealer.** |
| Hydraulic Pump | No Oil Pressure | • HYDRAULIC OIL LEAKS IN SYSTEM. Take safety precautions and check for leaks. Tighten fittings and replace damaged hoses.<br>• CHECK FOR MALFUNCTIONING SWITCH. Replace switches.<br>• BELT OR CLUTCH MAY BE SLIPPING. Replace tensioner or tighten idlers if needed. Replace belt if worn.<br>• VALVE NOT FUNCTIONING. Check for disconnected wires at solenoid or rusted ground wires. **Seek assistance from dealer if valve continues to be unresponsive.**<br>• PRESSURE RELIEF MAY BE SET TOO LOW OR BROKEN. **Seek assistance from dealer. CAUTION: PRESSURE EXCEEDING 2,750 PSI CAN DAMAGE THE PUMP.**<br>• PUMP IS WORN OR DAMAGED. **Seek assistance from dealer.** |
| Clutch | Does Not Engage | • CHECK FOR BLOWN FUSE. Replace fuse.<br>**CAUTION: FUSE SHOULD NOT EXCEED 30 AMPS**<br>• CHECK WIRE TO CLUTCH. Insure there are no breaks or shorts.<br>• CHECK FOR BAD SWITCHES IN SYSTEM. Replace switches.<br>• CLUTCH IS WORN OUT. **Seek assistance from dealer.** |
| Belt(s) | Jumps Off Pulley | • BELT(S) TOO LOOSE. Replace tensioner or tighten idler pulleys.<br>• CHECK FOR EXCESSIVE BELT WEAR. Replace worn belt(s).<br>• CHECK FOR LOOSE PUMP BRACKET. Tighten loose bolts. Replace broken bolts.<br>• CHECK CRANKSHAFT PULLEY FOR LOOSE OR BROKEN BOLTS. Tighten loose bolts. Replace broken bolts.<br>• CHECK ALIGNMENT OF IDLER PULLEYS AND CONDITION OF BEARINGS. Re-align idler pulleys or replace worn idler pulleys.<br>• CHECK ALIGNMENT OF CLUTCH AND CRANKSHAFT PULLEY. **If misalignment is visible, seek assistance from dealer.** |

**SAFETY WARNING!**

**Use extreme caution when inspecting an engine. Serious injury or death could result from getting too close! Remove key from ignition when servicing.**

DewEze®

# 600/700 SERIES

# PARTS

# Table of Contents

**PARTS SECTION**

Standard Parts
- Dual Lift Standard Parts..... 14-17
- 600/700 Common Parts..... 18-19
- Parallel Squeeze Crosstube/Arms..... 20
- Squeeze Cylinder Chart..... 21

Hydraulics
- Dual Lift Hydraulic Assembly..... 22-23
- Dual Lift Common Hydraulics-Gen 3..... 24-25
- Dual Lift Hydraulics Valve and Filter..... 26
- Valve and Filter-Gen 3 Double Poppet..... 27
- Valve Service Parts-Gen 2..... 28
- Gen 3 -08 Hydac Deutch 2014..... 29
- Gen 3 -08 Eaton Deutch 2015..... 30
- Gen 3 -08 Hydac Deutch 2016..... 31
- Hydraulic Assembly Reservoir..... 32
- Hydraulic Schematic Non-Proportional..... 33

XRM
- Dual Lift XRM Parts..... 35
- XRM Hydraulics..... 36
- XRM Hydraulics Update 2012..... 37
- XRM Hose Chart & Routing..... 38
- XRM Cylinder Assembly..... 39

Controls and Lights
- RF Control and Manual Switches..... 40
- Clutch Control Switch..... 41
- Hand Control Option..... 42-43
- Lights & Harness 12A01 thru Jun 2018..... 44
- Lights & Harness after Jun 2018..... 45

Decals
- Decals-Safety/Operation..... 46
- 600/700 Series Decals..... 47

Accessories
- Swingout Lights..... 48
- Cargo Lights..... 49
- LED Swingout Lights..... 50
- LED Cargo Lights..... 51
- Rear View Camera Option..... 52
- 30” Toolbox & Fender Skirts..... 53
- 20” Toolbox..... 54
- 17” Toolbox..... 55
- 12” Toolbox..... 56
- 770 Toolbox..... 57
- Across the Bed Toolbox..... 58
- Spinners and Risers..... 59
- Other..... 60
- Front Skirt Toolbox Replacement..... 61

Appendices

I
- GatorHyde Repair..... 62

II
- Remote Control..... 63-64
- 2-Bank Wiring - Kar-Tech Remote... 65-68
- 3rd Bank Wiring - Kar-Tech Remote 69-70
- 2-Bank - Gen 2 w/ Remote..... 71-72
- 3-Bank - Gen 3 w/ Remote..... 73-74

III
- Standard E/H..... 75-87

IV
- HD E/H..... 88-98

V
- XRM Adapter Update..... 99

# DUMMY ARMS & CROSSTUBE

| CROSSTUBES | | |
|---|---|---|
| BED WIDTH | BED #'s | PART # |
| 85.375 | 670, 675, 677, & 679 | 215149 |
| 93.0 | 682, 684, 687 & 688 | 215162 |
| 96.5 | 770, 778, 782, 784, 787, & 788 | 215138 |

| BED MODELS | STANDARD | BEEFCAKE 1000 | | BEEFCAKE 1500 | | BEEFCAKE 2000 | |
|---|---|---|---|---|---|---|---|
| | Drv & Pass | Drv Front | Drv Rear | Drv Front | Drv Rear | Drv Front | Drv Rear |
| 670 | 215189 | NA | NA | NA | NA | NA | NA |
| 671 | 215384 | NA | NA | NA | NA | NA | NA |
| 675 | 215150 | 215353 | 215354 | NA | NA | NA | NA |
| 676 | 215249 | 215353 | 215356 | 215355 | 215354 | NA | NA |
| 677 | 215191 | 215353 | 215357 | 215355 | 215356 | NA | NA |
| 679 | 215208 | 215353 | 215358 | 215355 | 215357 | 215355 | 215356 |
| 682 | 215145 | 215359 | 215357 | 215360 | 215356 | NA | NA |
| 684 | 215193 | 215359 | 215358 | 215360 | 215357 | 215360 | 215356 |
| 687 | 215198 | NA | NA | 215360 | 215361 | 215360 | 215361 |
| 688 | 215200 | NA | NA | 215360 | 215362 | 215360 | 215362 |
| 770 | 215210 | NA | NA | NA | NA | NA | NA |
| 778 | 215160 | 215363 | 215364 | NA | NA | NA | NA |
| 776 | 215257 | 215363 | 215365 | 215367 | 215366 | NA | NA |
| 782 | 215158 | 215363 | 215368 | 215367 | 215369 | NA | NA |
| 784 | 215202 | 215363 | 215370 | 215367 | 215371 | 215367 | 215372 |
| 787 | 215204 | NA | NA | 215367 | 215373 | 215367 | 215373 |
| 788 | 215206 | NA | NA | 215367 | 215374 | 215367 | 215374 |

# Dual Lift Standard Parts

| Parts List | | | |
|---|---|---|---|
| ITEM | QTY | PART # | DESCRIPTION |
| 1 | 2 | 110244 | BOLT, 1/2-13 X 1.5 SHCS |
| 2 | 8 | 110319 | NUT, 5/16-18 U-TYPE .75L |
| 3 | 4 | 110336 | WASHER, 1-1/4" FLAT MACHINE |
| 4 | 2 | 110365 | BOLT, 5/8-18 X 1.5 GR 5 |
| 5 | 2 | 110437 | BOLT, 3/8-16 X 0.75, WIZ FLANGE |
| 6 | 11 | 110444 | BOLT, 5/16-18 X 0.75, WIZ FLANGE |
| 7 | 2 | 110588 | NUT, 1/2-13 WIZ FLANGE |
| 8 | 2 | 110658 | WASHER, 1/2" FLAT STANDARD |
| 9 | 2 | 110663 | WASHER, 5/8" FLAT SAE |
| 10 | 4 | 110672 | WASHER, 3/8" LOCK |
| 11 | 4 | 110676 | WASHER, 3/8" FLAT STANDARD |
| 12 | 8 | 110794 | BOLT, 5/16-18 X 0.75, GR8 BLK HEX FLANGE |
| 13 | 4 | 110826 | NUT, 3/8-16 GR 5 |
| 14 | 4 | 110846 | Bolt, 3/8-16 X 5 in Carriage |
| 15 | 2 | 200150 | ROLL PIN, 1/4 X 2 |
| 16 | 2 | 202023 | BUSHING, 1.5 X 1.25 X 2.0 SPLIT CG/ID |
| 17 | 1 | 205043 | INSTALL HARDWARE |
| 18 | 1 | 210459 | HITCH BALL AND NUT |
| 19 | 2 | 210935 | IDLER ARM, MACHINE DWG. |
| 20 | 1 | 211202 | VALVE COVER |
| 21 | 2 | 211292 | SHIELD, CROSSARM |
| 22 | 1 | 211481 | EDGE TRIM, VALVE COVER |
| 23 | 2 | 214002 | PUSH ARM ASSY, DUAL LIFT |
| 24 | 1 | 215128 | BALL WELL DOOR WELDMENT |
| 25 | 1 | 215139 | CENTER TAILBOARD DOOR WELDMENT |
| 26 | 2 | 215140 | PIN WELDMENT, 1-1/4 X 3 |
| 27 | 2 | 215141 | PIN WELDMENT, 1-1/4 X 7 |
| 28 | 2 | 215142 | PIN WELDMENT, 1-1/4 X 4 |
| 29 | 2 | 215148 | PIN WELDMENT, CROSSTUBE LINK |
| 30 | 1 | 215167 | WELDMENT, HUGGER ARM LEFT |
| 31 | 1 | 215168 | WELDMENT, HUGGER ARM RIGHT |
| 32 | 8 | 510174 | GREASE ZERK, 1/4-28 ST |

2/24/2011

# Dual Lift Standard Parts

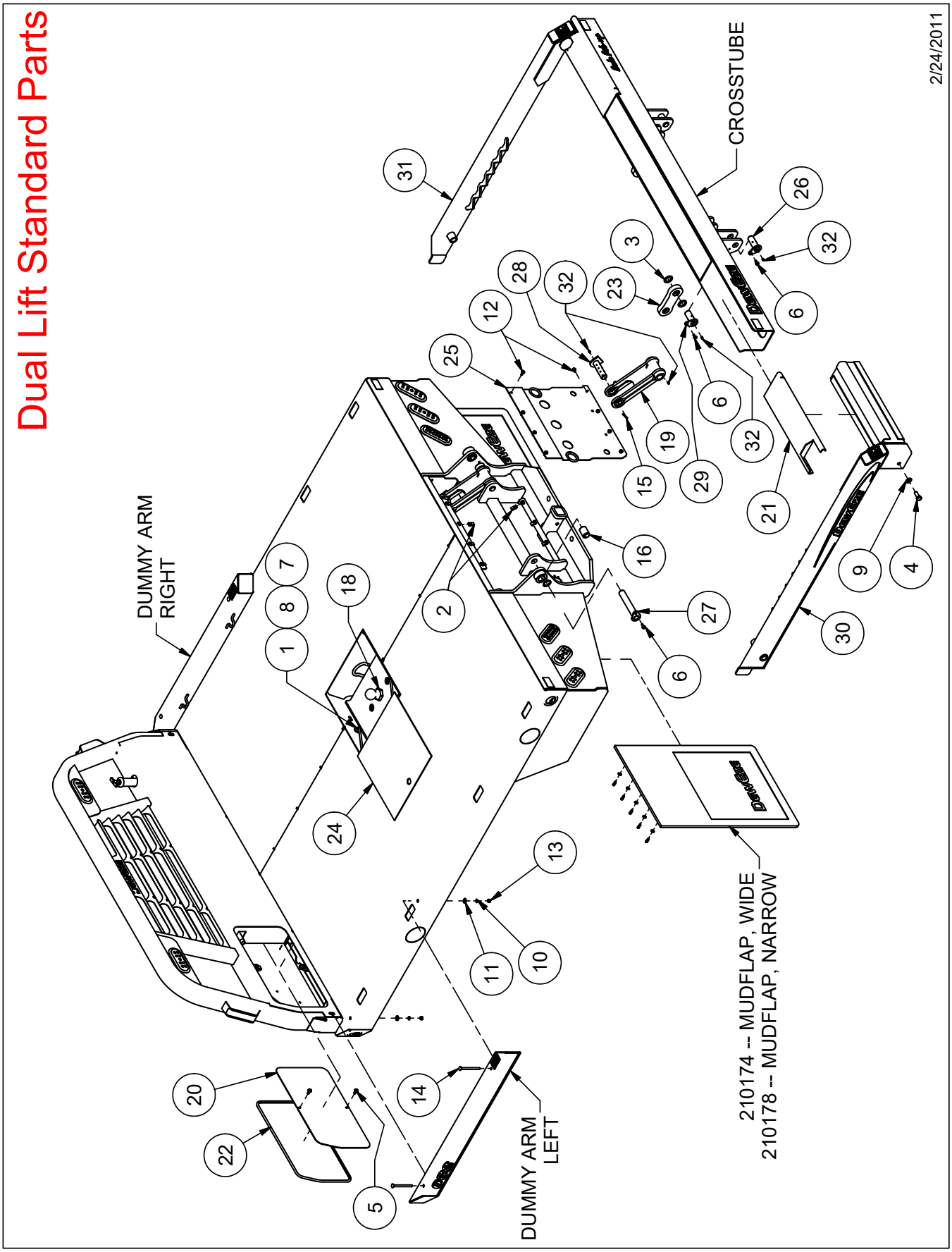

# Dual Lift Standard Parts

## For S/N's after 12A01

| Parts List | | | |
|---|---|---|---|
| ITEM | QTY | PART # | DESCRIPTION |
| 1 | 10 | 110069 | WASHER, 5/16" FLAT SAE |
| 2 | 2 | 110244 | BOLT, 1/2-13 X 1.5 SHCS |
| 3 | 10 | 110319 | NUT, 5/16-18 U-TYPE .75L |
| 4 | 4 | 110336 | WASHER, 1-1/4" FLAT MACHINE |
| 5 | 2 | 110365 | BOLT, 5/8-18 X 1.5 GR 5 |
| 6 | 10 | 110422 | BOLT, 5/16-18 X .75 |
| 7 | 2 | 110437 | BOLT, 3/8-16 X 0.75, WIZ FLANGE |
| 8 | 11 | 110444 | BOLT, 5/16-18 X 0.75, WIZ FLANGE |
| 9 | 2 | 110588 | NUT, 1/2-13 WIZ FLANGE |
| 10 | 2 | 110658 | WASHER, 1/2" FLAT STANDARD |
| 11 | 2 | 110663 | WASHER, 5/8" FLAT SAE |
| 12 | 4 | 110672 | WASHER, 3/8" LOCK |
| 13 | 4 | 110676 | WASHER, 3/8" FLAT STANDARD |
| 14 | 2 | 110804 | NUT, 3/8-16 U-TYPE .75L |
| 15 | 4 | 110826 | NUT, 3/8-16 GR 5 |
| 16 | 4 | 110846 | Bolt, 3/8-16 X 5 in Carriage |
| 17 | 2 | 200150 | ROLL PIN, 1/4 X 2 |
| 18 | 2 | 202023 | BUSHING, 1.5 X 1.25 X 2.0 SPLIT CG/ID |
| 19 | 1 | 205043 | INSTALL HARDWARE |
| 20 | 1 | 210459 | HITCH BALL AND NUT |
| 21 | 2 | 210935 | IDLER ARM, MACHINE DWG. |
| 22 | 1 | 211202 | VALVE COVER |
| 23 | 2 | 211292 | SHIELD, CROSSARM |
| 24 | 1 | 211481 | EDGE TRIM, VALVE COVER |
| 25 | 2 | 214002 | PUSH ARM ASSY, DUAL LIFT |
| 26 | 1 | 215128 | BALL WELL DOOR WELDMENT |
| 27 | 2 | 215140 | PIN WELDMENT, 1-1/4 X 3 |
| 28 | 2 | 215141 | PIN WELDMENT, 1-1/4 X 7 |
| 29 | 2 | 215142 | PIN WELDMENT, 1-1/4 X 4 |
| 30 | 2 | 215148 | PIN WELDMENT, CROSSTUBE LINK |
| 31 | 1 | 215167 | WELDMENT, HUGGER ARM LEFT |
| 32 | 1 | 215168 | WELDMENT, HUGGER ARM RIGHT |
| 33 | 1 | 215230 | CENTER TAILBOARD DOOR WELDMENT, UPPER |
| 34 | 1 | 260253 | CENTER TAILBOARD, LOWER, ARM BED |
| 35 | 8 | 510174 | GREASE ZERK, 1/4-28 ST |

9/13/2011

# Dual Lift Standard Parts

For S/N's after 12A01

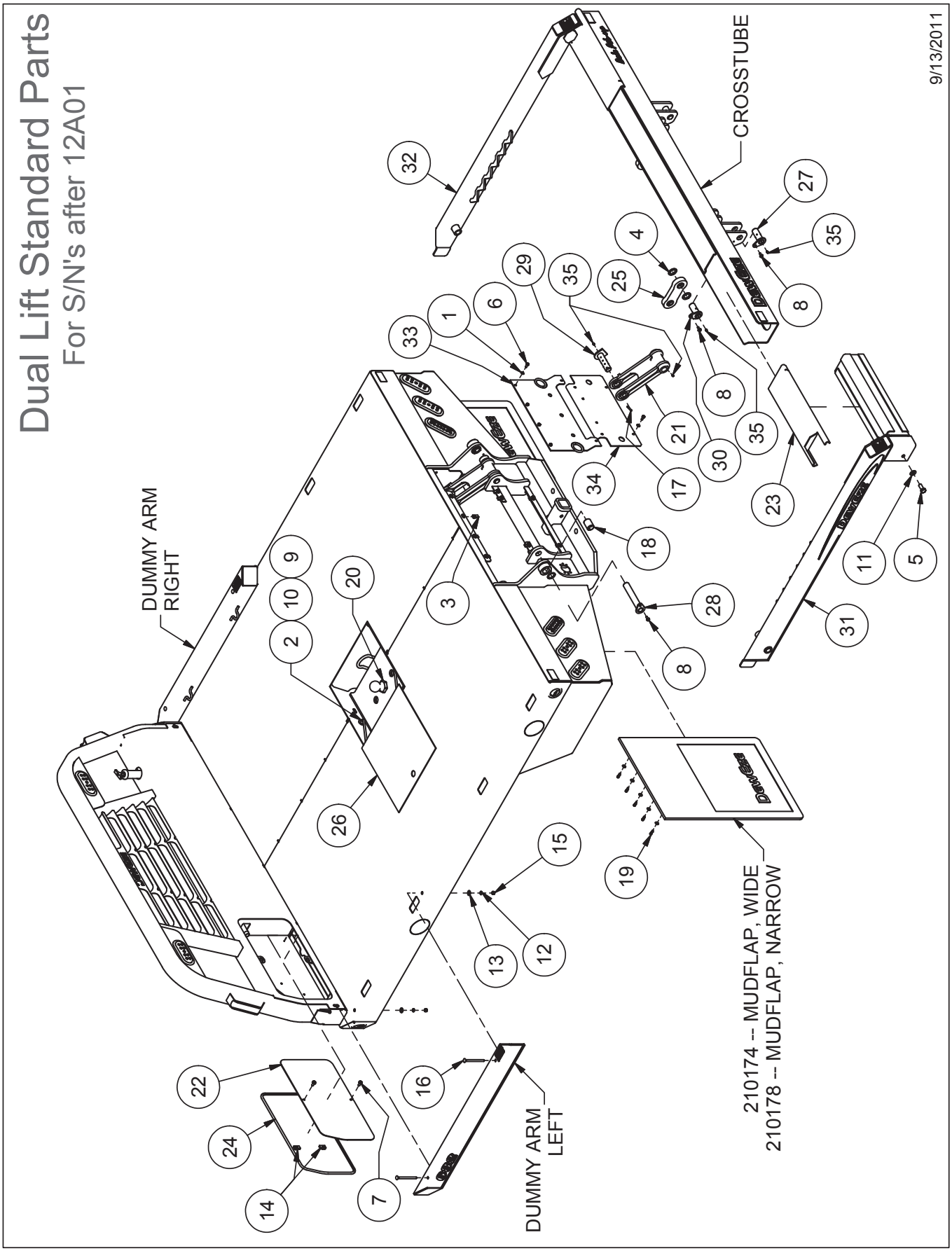

# 600 & 700 Series Common Parts

| Parts List | | | |
|---|---|---|---|
| ITEM | QTY | PART # | DESCRIPTION |
| 1 | 2 | 110440 | BOLT, 3/8-16 X 1, WIZ FLANGE |
| 2 | 4 | 110672 | WASHER, 3/8" LOCK |
| 3 | 4 | 110676 | WASHER, 3/8" FLAT STANDARD |
| 4 | 2 | 110804 | NUT, 3/8-16 U-TYPE .75L |
| 5 | 4 | 110826 | NUT, 3/8-16 GR 5 |
| 6 | 4 | 110846 | Bolt, 3/8-16 X 5 in Carriage |
| 7 | 10 | 110069 | WASHER, 5/16" FLAT SAE |
| 8 | 2 | 110244 | BOLT, 1/2-13 X 1.5 SHCS |
| 9 | 10 | 110319 | NUT, 5/16-18 U-TYPE .75L |
| 10 | 10 | 110423 | BOLT, 5/16-18 X 1.0 |
| 11 | 2 | 110588 | NUT, 1/2-13 WIZ FLANGE |
| 12 | 2 | 110658 | WASHER, 1/2" FLAT STANDARD |
| 13 | 1 | 205043 | INSTALL HARDWARE |
| 14 | 1 | 210459 | HITCH BALL AND NUT |
| 15 | 1 | 215128 | BALL WELL DOOR WELDMENT |
| 16 | 1 | 211202 | VALVE COVER |
| 17 | 1 | 211481 | Molding, Valve Cover (200249) |
| 18 | 1 | 215230 | CENTER TAILBOARD DOOR WELDMENT, UPPER |
| 19 | 1 | 215400 | Weldment, Tailboard Camera Mount |
| 20 | 1 | 210892 | Hinge Rod, Lid Recessed Well |
| 21 | 2 | 210920 | Hinge Clip |

12/7/2021

# 600 & 700 Series Common Parts

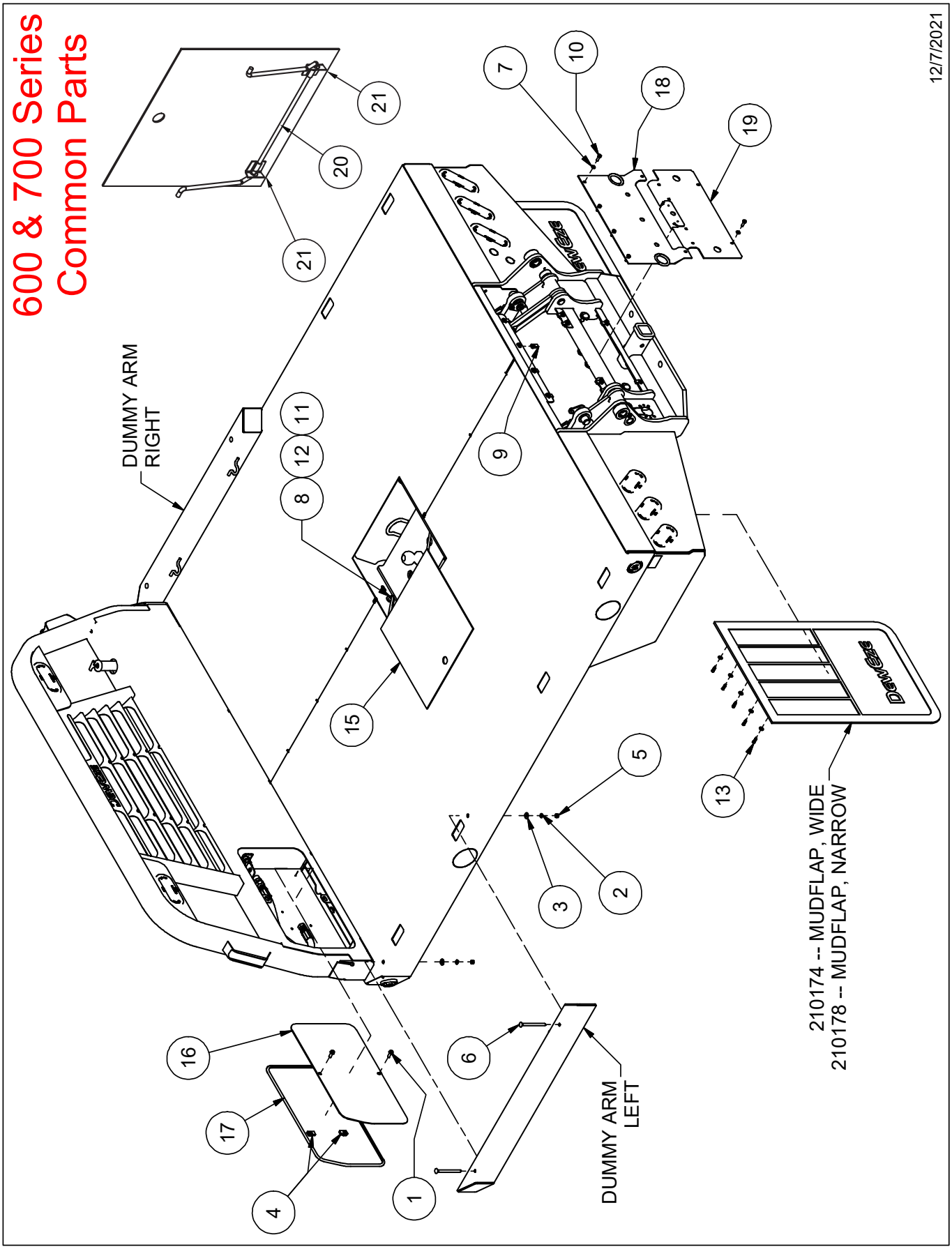


12/7/2021

# Crosstubes, Arms & Squeeze Cylinders

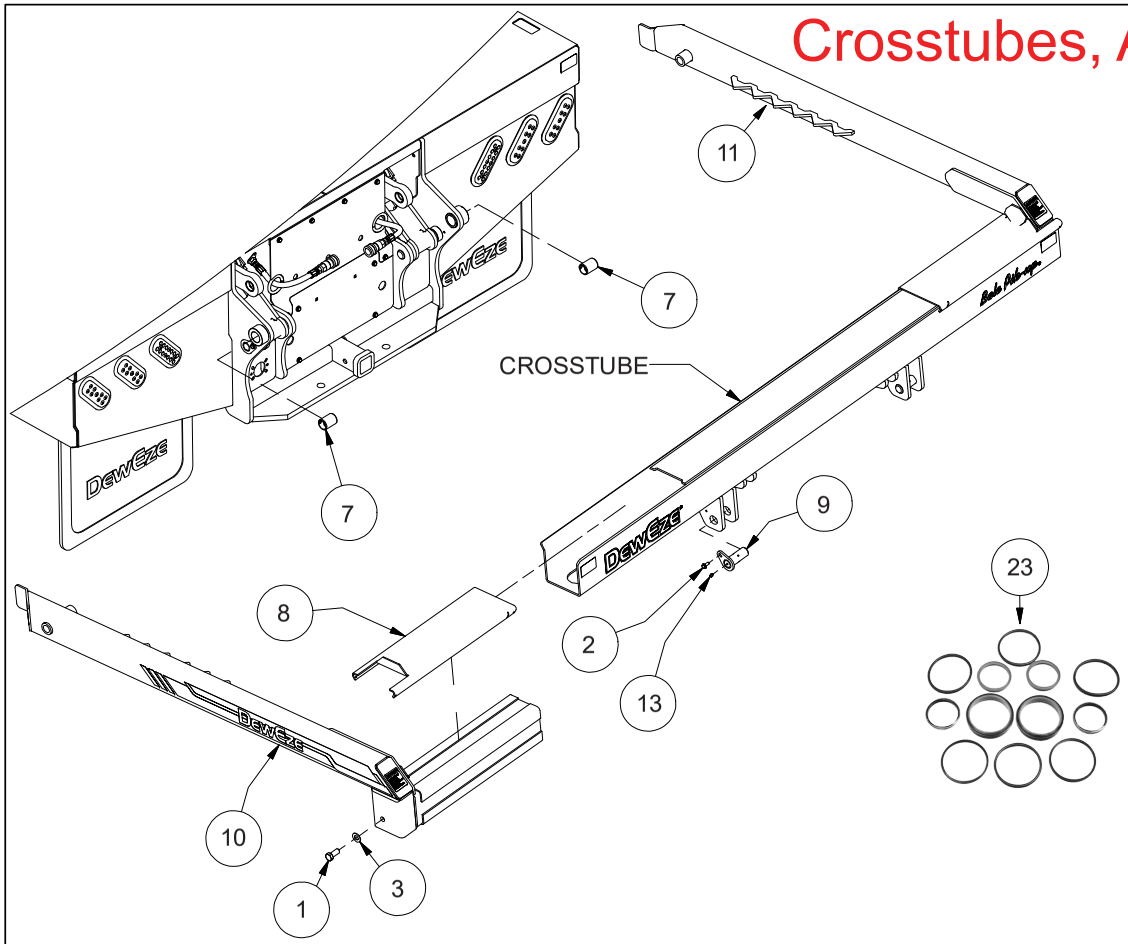


| PARTS LIST | | | |
|---|---|---|---|
| ITEM | QTY | PART # | DESCRIPTION |
| 1 | 2 | 110365 | Bolt, 5/8-18 X 1.5 Gr 5 |
| 2 | 10 | 110444 | Bolt, 5/16-18 X 0.75, Wiz Flange |
| 3 | 2 | 110663 | Washer, 5/8" Flat Sae |
| 4 | 1 | 120078 | Adapter, 6mb-6mp (3/8 X 2-1/2) |
| 5 | 1 | 120147 | Adapter, 6mb-8mp90 |
| 6 | 1 | 120311 | Adapter, 8mp-6fpx90 |
| 7 | 2 | 202023 | Bushing, 1.5 X 1.25 X 2.0 Split Cg/ld |
| 8 | 2 | 211292 | Shield, Crossarm |
| 9 | 2 | 215140 | Pin Weldment, 1-1/4 X 3 |
| 10 | 1 | 215167 | Weldment, Hugger Arm Left |
| 11 | 1 | 215168 | Weldment, Hugger Arm Right |
| 12 | 2 | 420005 | Coupler, Pioneer Male |
| 13 | 8 | 510174 | Grease Zerk, 1/4-28 St |
| 14 | 2 | 120582 | Coupler, Pioneer Male, ORB |
| 15 | 2 | 120756 | Adapter, 8mb-6mb Adjustable |
| 16 | 1 | 220002 | OLD (Short) Cylinder, 2 x 34 Center Port |
| 17 | 1 | 223032 | OLD (Med) Cylinder, 2 x 35.75 Center Port |
| 18 | 1 | 223001 | OLD (Long) Cylinder, 2 x 39.25 Center Port |
| 19 | 1 | 223119 | NEW (Short) Cylinder, 2 x 34 Side Port |
| 20 | 1 | 223121 | NEW (Long) Cylinder, 2 x 39.25 Side Port |
| 21 | 1 | 223026 | OLD (SSQ) Cylinder, 2 x 39.25 Center Port |
| 22 | 1 | 223110 | NEW (SSQ) Cylinder, 2 x 39.25 Side Port |
| 23 | KIT | 220056 | Seal Kit, Squeeze Cylinders |

OLD (Center Port) SQUEEZE: SHORT, MEDIUM, LONG

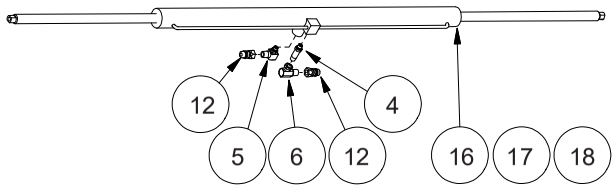


NEW (Side Port) SQUEEZE: SHORT or LONG

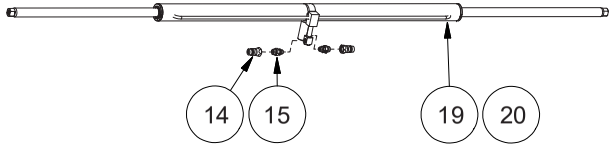


OLD (Center Port) SSQ

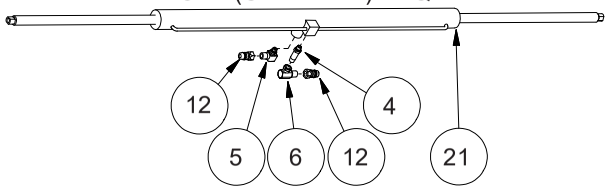


NEW (Side Port) SSQ

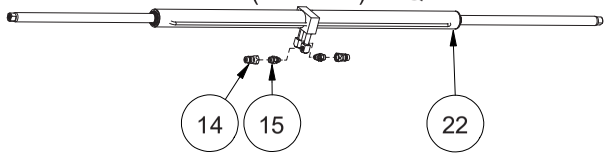


| CROSSTUBES | | |
|---|---|---|
| Bed Width | PART # | Models |
| 85.375” | 215149 | 670, 671, 675, 676, 677, & 679 |
| 93.0” | 215162 | 682, 684, 687, & 688 |
| 96.5” | 215138 | 770,778,776,782,784,787,& 788 |

NOTE: New SIDE PORT cylinders are available for short, long and SSQ configurations. They use fewer fittings, are less hassle, and decrease the possiblity of leakage.

# Flatbed Squeeze Cylinders

| Bed Width | Model # | | Squeeze Cylinder | Model # | |
|---|---|---|---|---|---|
| 85.375" | 670 | | 220002 | 470 | |
| | 675 | | | 475 | |
| | 676 | | | | |
| | 677 | | | 477 | |
| | 679 | | | 479 | |
| 91.375" | | | 220002 | 482 | |
| | | | | 482 | XRM |
| | | | | 484 | |
| | | | | 484 | XRM |
| | | | | 487 | |
| | | | | 487 | XRM |
| | | | | 488 | |
| | | | | 488 | XRM |
| 93.0" | 682 | | 223032 | | |
| | 682 | XRM | | | |
| | 684 | | | | |
| | 684 | XRM | | | |
| | 687 | | | | |
| | 687 | XRM | | | |
| | 688 | | | | |
| | 688 | XRM | | | |
| 96.5" | 770 | | 223001 | | |
| | 770 | XRM | | | |
| | 778 | | | 578 | |
| | 778 | XRM | | 578 | XRM |
| | 776 | | | | |
| | 776 | XRM | | | |
| | 782 | | | 582 | |
| | 782 | XRM | | 582 | XRM |
| | 784 | | | | |
| | 784 | XRM | | | |
| | 787 | | | 587 | |
| | 787 | XRM | | 587 | XRM |
| | 788 | | | | |
| | 788 | XRM | | | |
| 85.375 | 670 | XRM | 223001 | 470 | XRM |
| | 675 | XRM | | 475 | XRM |
| | 676 | XRM | | | |
| | 677 | XRM | | 477 | XRM |
| | 679 | XRM | | 479 | XRM |

A **Synchronized Squeeze Cylinder**

Part # **223026**

is available as an option for all beds.

This cylinder is the same length as # **223001.**

Squeeze Cylinder Seal Kit Part # 220056

10/28/2016

# Dual Lift Hydraulics Assy

| Squeeze Cylinders | | |
|---|---|---|
| Bed Width | Bed #'s | Part # |
| 85.3.75 | 675 | 220002 |
| 93.0 | 682 | 223032 |
| 96.5 | 778 | 223001 |

**SEE CHART FOR MORE DETAILS**

| Synchronized Squeeze Cylinder |
|---|
| Part # 223026 |

| Squeeze Cyl Seal Kit |
|---|
| Part# 220056 |

| Dual Lift Cylinders |
|---|
| Anniversary Part# 223030 |
| Production Part# 223038 |
| Seal Kit Part# 212012 |

| Parts List | | | |
|---|---|---|---|
| ITEM | QTY | PART # | DESCRIPTION |
| 1 | 2 | 110352 | BOLT, 1-8 X 10, GR8 |
| 2 | 2 | 110649 | WASHER, 1" LOCK |
| 3 | 1 | 120078 | ADAPTER, 6MB-6MP (3/8 X 2-1/2) |
| 4 | 1 | 120147 | ADAPTER, 6MB-8MP90 |
| 5 | 2 | 120242 | ADAPTER, 8MJ-8MJ-8MJ |
| 6 | 1 | 120311 | ADAPTER, 8MP-6FPX90 |
| 7 | 4 | 120319 | ADAPTER, 6MJ-6MB |
| 8 | 2 | 202022 | SPRING, 1" O.D. X 12" L X .105 WIRE |
| 9 | 2 | 215144 | KEEPER, 1 IN NUT, WELDMENT |
| 10 | 2 | 220084 | COUPLER, PIONEER FEMALE |
| 11 | 4 | 220681 | HOSE ASSY, FLATBED DUAL LIFT |
| 12 | 2 | 220682 | HOSE ASSY, FLATBED SQUEEZE SHORT |
| 13 | 2 | 223038 | LIFT CYLINDER 3.50 X 16.6 |
| 14 | 2 | 260111 | MOUNT, HOSE SPRING |
| 15 | 2 | 420005 | COUPLER, PIONEER MALE |

## 600 - 700 WITH GENERATION 2 VALVES

| COMMON HOSES | | SQUEEZE HOSES SHORT | LIFT HOSES SHORT | RESERVOIR RETURN | HYDRAULIC HOSE KIT # |
|---|---|---|---|---|---|
| | | 6MTF3 - 8FJX / 8MP | 8M3K - 6FJX / 8FJX | 12-10FJX / 12-12MPX90 | |
| | | 2 ea. | 4 ea. | 1 ea. | |
| | | 220682 (17 in.) | 220681 (17 in.) | 220691 (12.25 in.) | **223033** |
| | | | | | |
| **FLATBED LENGTH** | | **SQUEEZE HOSES** | **LIFT HOSES** | | |
| | | 8M3K - 8FJX / 8MJ | 8M3K - 6FJX / 8FJX | | |
| | | 2 ea. | 2 ea. | | |
| 80 in. | _70 | 220683 (106 in.) | 220687 (76 in.) | | **223034** |
| 96 in. | _75 & _78 | 220684 (132 in.) | 220689 (111 in.) | | **223036** |
| 106-110 in. | _77 & _82, _79 & _84 | 220685 (132 in.) | 220689 (111 in.) | | **223036** |
| 132-136 in. | _87 & _88 | 220686 (158 in.) | 220690 (137 in.) | | **223037** |

6/15/2012

# Dual Lift Hydraulics Assy

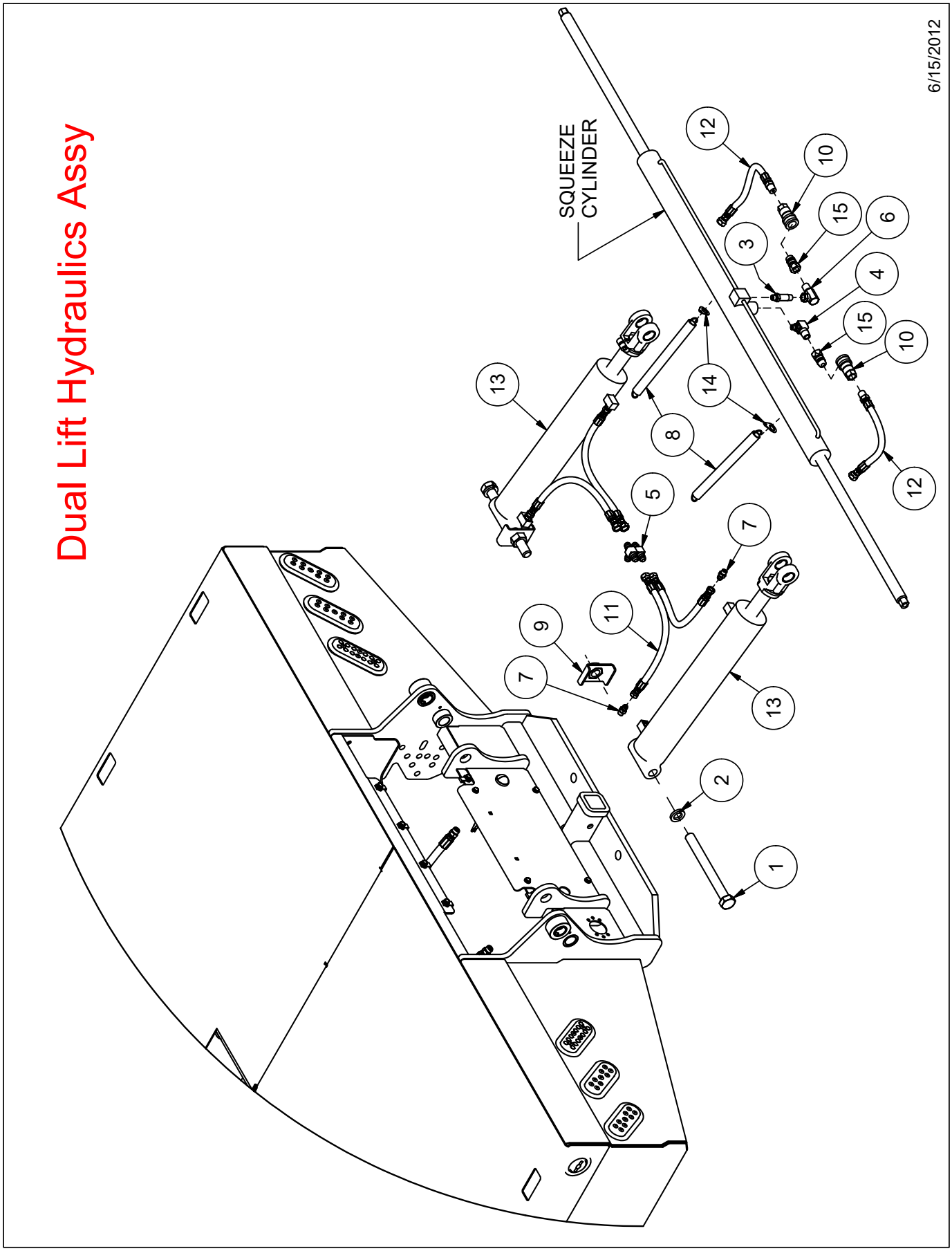

# Dual Lift Common Hydraulics
## With Generation 3 Valve

| Dual Lift Cylinders |
|---|
| Production Part# 223038 |
| Seal Kit Part# 212012 |

| Parts List | | | |
|---|---|---|---|
| ITEM | QTY | PART # | DESCRIPTION |
| 1 | 4 | 110336 | WASHER, 1-1/4" FLAT MACHINE |
| 2 | 10 | 110444 | BOLT, 5/16-18 X 0.75, WIZ FLANGE |
| 3 | 2 | 110649 | WASHER, 1" LOCK |
| 4 | 2 | 120242 | ADAPTER, 8MJ-8MJ-8MJ |
| 5 | 4 | 120319 | ADAPTER, 6MJ-6MB |
| 6 | 2 | 200150 | ROLL PIN, 1/4 X 2 |
| 7 | 2 | 202022 | SPRING, 1" O.D. X 12" L X .105 WIRE |
| 8 | 2 | 210935 | IDLER ARM, MACHINE DWG. |
| 9 | 2 | 214002 | PUSH ARM ASSY, DUAL LIFT |
| 10 | 2 | 215141 | PIN WELDMENT, 1-1/4 X 7 |
| 11 | 2 | 215142 | PIN WELDMENT, 1-1/4 X 4 |
| 12 | 2 | 215144 | KEEPER, 1 IN NUT, WELDMENT |
| 13 | 2 | 215148 | PIN WELDMENT, CROSSTUBE LINK |
| 14 | 2 | 220084 | COUPLER, PIONEER FEMALE |
| 15 | 4 | 220681 | HOSE ASSY, FLATBED DUAL LIFT |
| 16 | 2 | 220682 | HOSE ASSY, FLATBED SQUEEZE SHORT |
| 17 | 2 | 223038 | LIFT CYLINDER 3.50 X 16.6 |
| 18 | 2 | 260111 | MOUNT, HOSE SPRING |
| 19 | 2 | 260760 | Bolt, 1-8 x 10, Greasable |
| 20 | 10 | 510174 | GREASE ZERK, 1/4-28 ST |

## 600 - 700 WITH GENERATION 3 VALVES

| COMMON HOSES | | SQUEEZE HOSES SHORT | LIFT HOSES SHORT | RESERVOIR RETURN | HYDRAULIC HOSE KIT # |
|---|---|---|---|---|---|
| | | 6MTF3 - 8FJX / 8MP | 8M3K - 6FJX / 8FJX | 12-10FJX / 12-12FJX | |
| | | 2 ea. | 4 ea. | 1 ea. | |
| | | 220682 (17 in.) | 220681 (17 in.) | 220723 (25 in.) | **223051** |
| | | | | | |
| **FLATBED LENGTH** | | **SQUEEZE HOSES** | **LIFT HOSES** | | |
| | | 8M3K - 8FJX / 8MJ | 8M3K - 6FJX / 8FJX | | |
| | | 2 ea. | 2 ea. | | |
| 80 in. | _70, _71 | 220683 (106 in.) | 220687 (76 in.) | | **223034** |
| 96 &101 in. | _75, _76 & _78 | 220685 (132 in.) | 220689 (111 in.) | | **223036** |
| 106-110 in. | _77 & _82, _79 & _84 | 220685 (132 in.) | 220689 (111 in.) | | **223036** |
| 132-136 in. | _87 & _88 | 220686 (158 in.) | 220690 (137 in.) | | **223037** |

12/4/2019

# Dual Lift Common Hydraulics

## With Generation 3 Valve

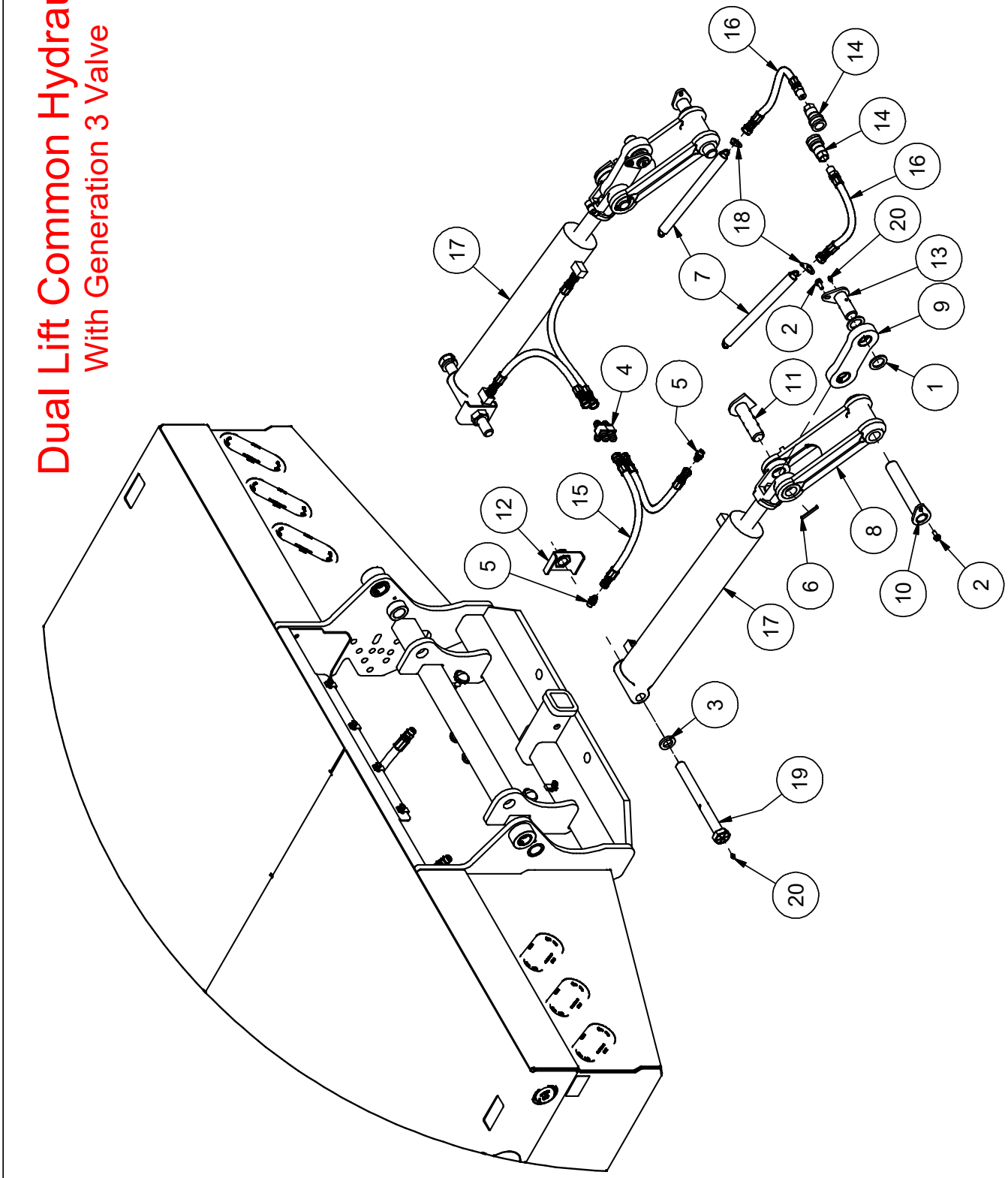


12/4/2019

# Dual Lift Hydraulics
# Valve & Filter

| Parts List | | | |
|---|---|---|---|
| ITEM | QTY | PART # | DESCRIPTION |
| 1 | 1 | 223016 | VALVE, FLATBED MONOBLOCK |
| 2 | 1 | 120493 | ADAPTER, 10MJ-8MB |
| 3 | 2 | 120288 | ADAPTER, 8MJ-8MB90 |
| 4 | 2 | 120134 | ADAPTER, 6MJ-8MB90 |
| 5 | 2 | 110674 | WASHER, 5/16" LOCK |
| 6 | 2 | 110608 | NUT, 5/16-18 |
| 7 | 2 | 110538 | BOLT, 5/16-18 X 3.0 |
| 8 | 1 | 720043 | FILTER, 10 MICRON |
| 9 | 1 | 720041 | FILTER HEAD |
| 10 | 1 | 260265 | MOUNTING BRACKET, FILTER |
| 11 | 1 | 222039 | Valve, Check With .075 Orifice |
| 12 | 1 | 220691 | RESERVOIR RETURN |
| 13 | 1 | 120244 | ADAPTER, 12MJ-12MP |
| 14 | 4 | 110434 | BOLT, 1/4-20 X 0.5, WIZ FLANGE |
| 15 | 2 | 110290 | NUT, 1/4-20 WIZ FLANGE |

****

5,7 & 9 Gallon System
120277 -- Adapter 8MJ-8MB

12 & 17 Gallon System
120174 -- Adapter 8MB-12FPX

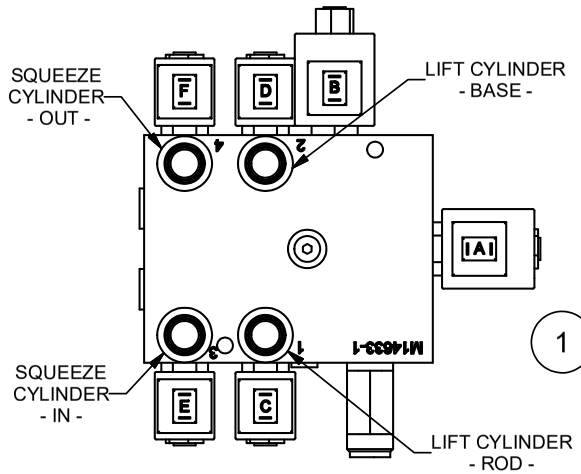


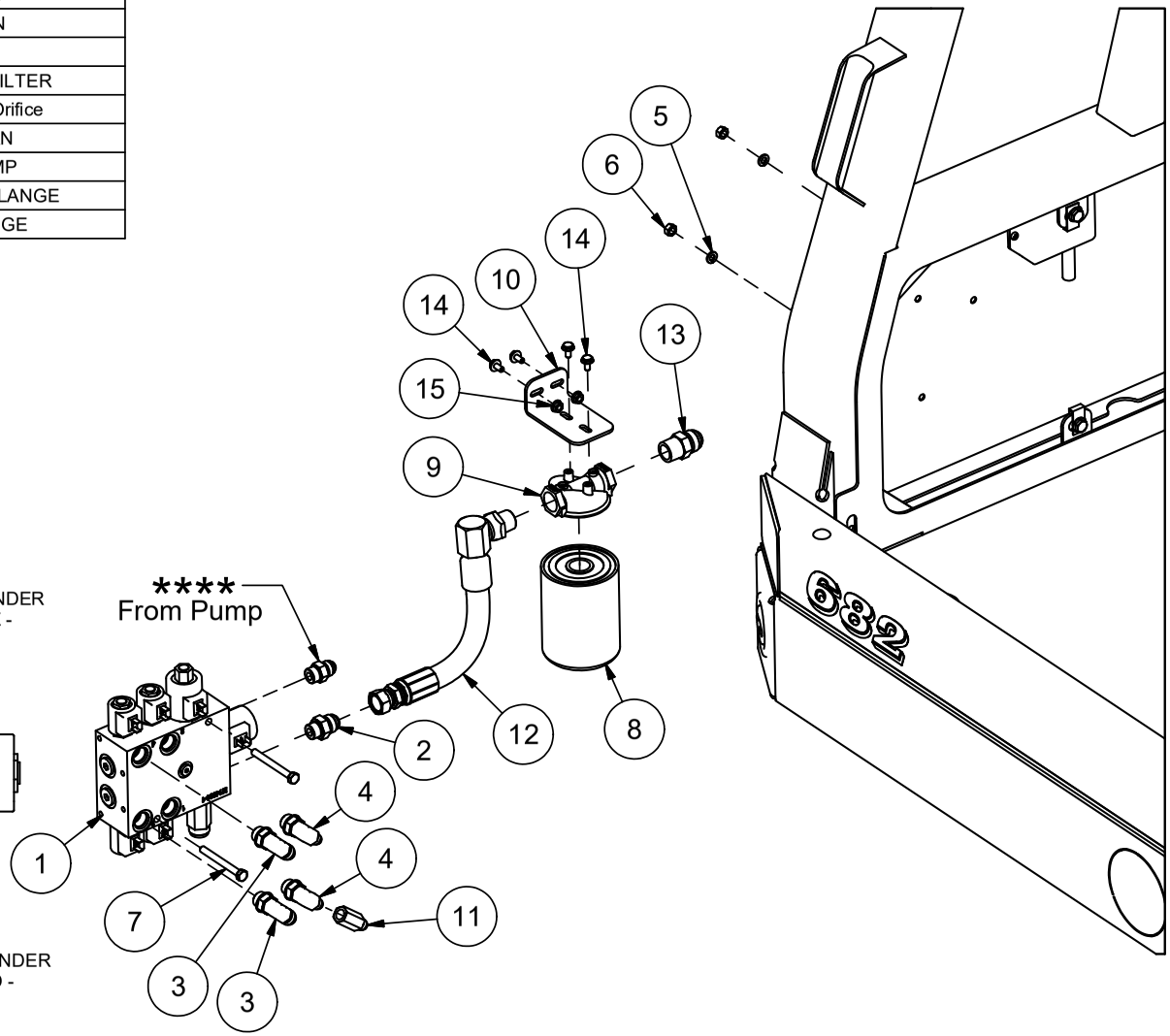


6/6/2012

# Valve & Filter

## Gen 3 Double Poppet

| Parts List | | | |
|---|---|---|---|
| ITEM | QTY | PART # | DESCRIPTION |
| 1 | 2 | 110538 | BOLT, 5/16-18 X 3.0 |
| 2 | 2 | 110608 | NUT, 5/16-18 |
| 3 | 2 | 110674 | WASHER, 5/16" LOCK |
| 4 | 2 | 120134 | ADAPTER, 6MJ-8MB90 |
| 5 | 1 | 120277 | ADAPTER, 8MJ-8MB |
| 6 | 2 | 120288 | ADAPTER, 8MJ-8MB90 |
| 7 | 1 | 120493 | ADAPTER, 10MJ-8MB |
| 8 | 2 | 110290 | NUT, 1/4-20 WIZ FLANGE |
| 9 | 4 | 110434 | BOLT, 1/4-20 X 0.5, WIZ FLANGE |
| 10 | 2 | 120244 | ADAPTER, 12MJ-12MP |
| 11 | 1 | 260265 | MOUNTING BRACKET, FILTER |
| 12 | 1 | 720041 | FILTER HEAD |
| 13 | 1 | 720043 | FILTER, 10 MICRON |
| 14 | 1 | 220723 | HOSE, VALVE TO FILTER |
| 15 | 1 | 222039 | Valve, Check With .075 Orifice |
| 16 | 1 | 223044 | Flatbed Valve, Small, Monoblock Ver II |

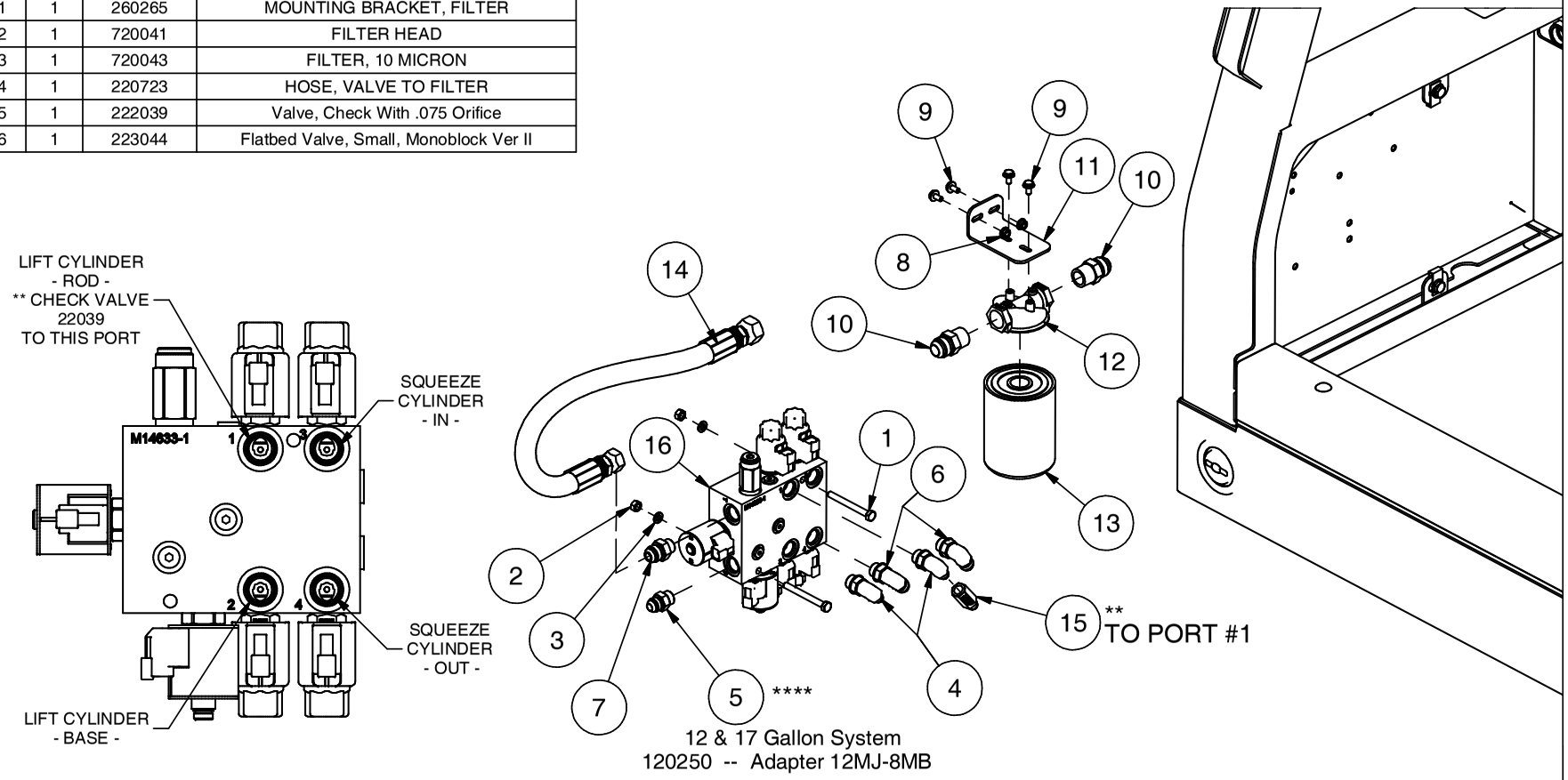


12 & 17 Gallon System
120250 -- Adapter 12MJ-8MB

Also As Required
120368 -- Adapter 8mj-8fjx90
120267 -- Adapter 12mj-12fjx90

9/18/2014

# GEN 2 VALVE - SERVICE PARTS

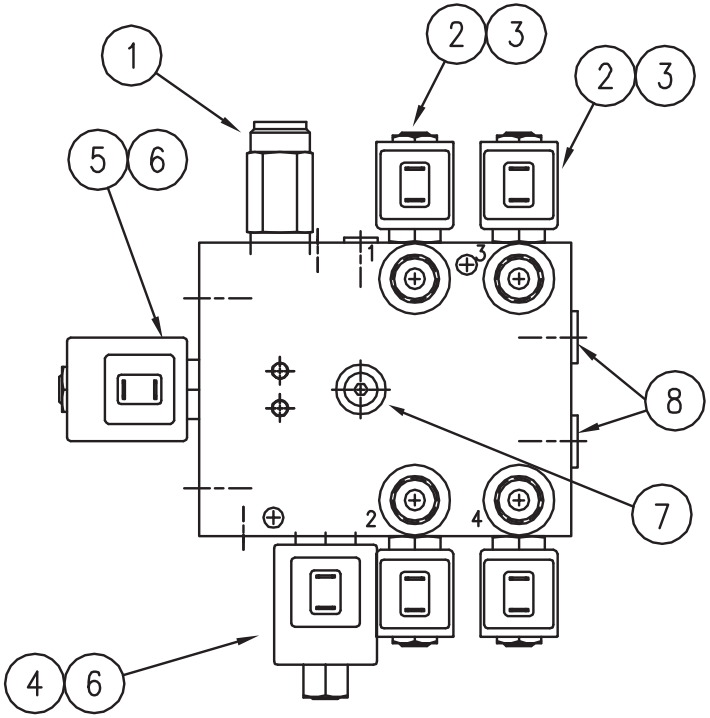


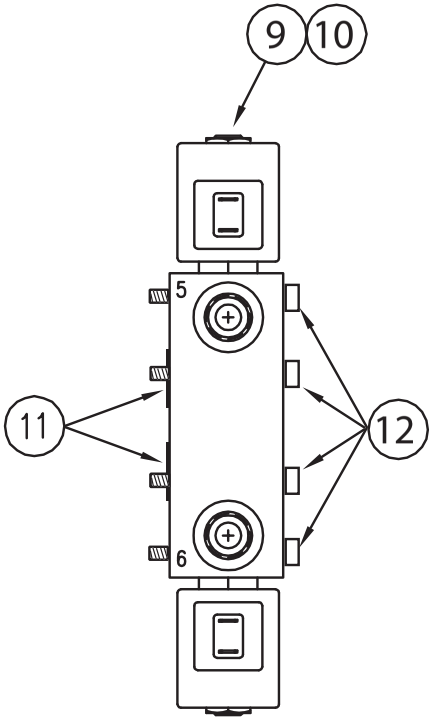


| ITEM NO | DESCRIPTION | PART NO. | QUAN |
|---|---|---|---|
| 1 | VALVE, PRESSURE RELIEF | 222004 | 1 |
| 2 | CARTRIDGE, #8 VALVE, W/O COIL | 720015 | 4 |
| 3 | COIL, #8 VALVE, 12 VOLT | 820143 | 4 |
| 4 | SPOOL, #10 VALVE | 820232 | 1 |
| 5 | VALVE, DIRECTIONAL, 4-WAY | 222002 | 1 |
| 6 | COIL, #10 VALVE, 12 VOLT | 820229 | 2 |
| 7 | O-RING, ADAPTER #4 7/16-20 | 120062 | 2 |
| 8 | O-RING, ADAPTER #8 3/4-16 | 720164 | 2 |
| | **VALVE, MONOBLOCK, COMPLETE** | **223016** | 1 |

## VALVE FOR ADDITIONAL THIRD BANK

| ITEM NO | DESCRIPTION | PART NO. | QUAN |
|---|---|---|---|
| 9 | VALVE, POPPET FOR 223017 | 222003 | 2 |
| 10 | COIL, #10 VALVE, 12 VOLT | 820229 | 2 |
| 11 | O-RING, -219, 90 DURO | 120376 | 2 |
| 12 | BOLT, 5/16-18 X 2 SHCS | 110168 | 4 |
| | **VALVE, 3RD BANK ADD ON (223016)** | **223017** | **1** |

# GEN 3 VALVE
# -08 HYDAC DEUTSCH
# SERVICE PARTS

Starting S/N's 2014

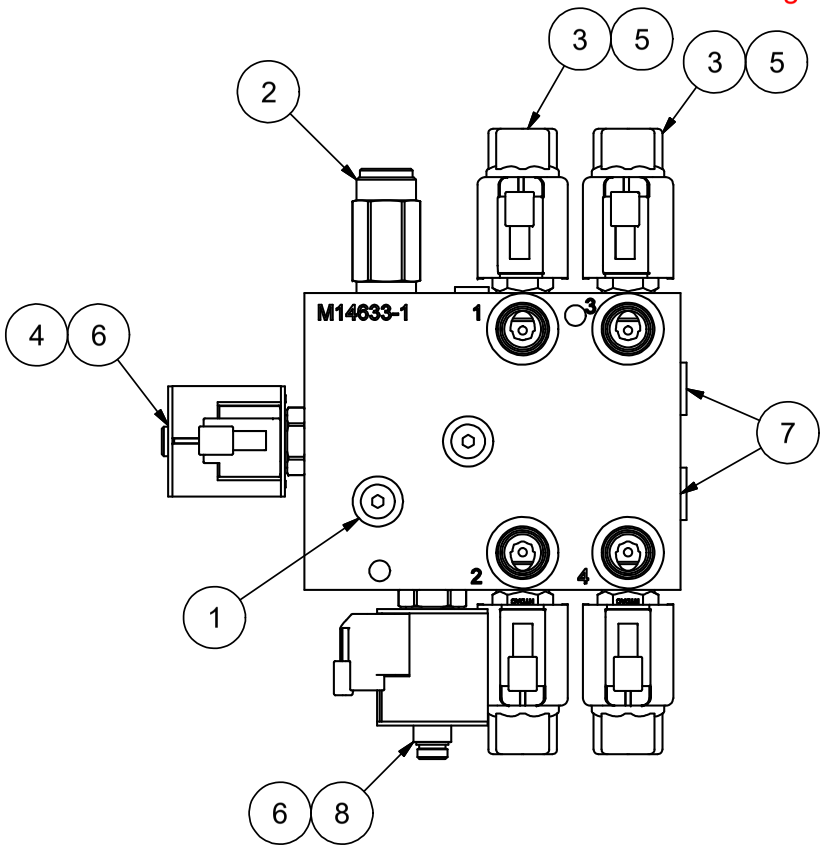


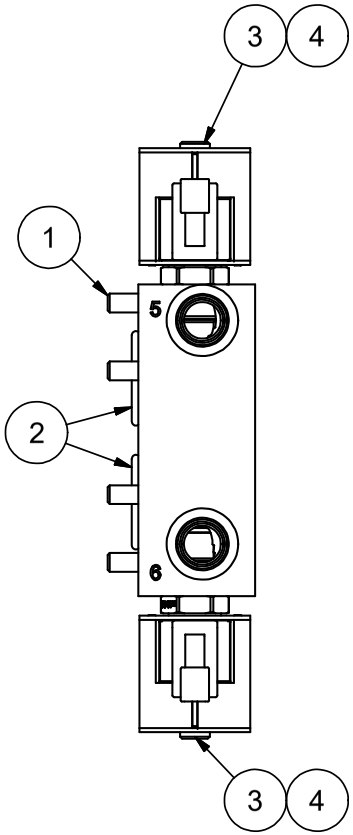


| Flatbed Valve, Small, Hydac Deutsch P/N 223044 | | | |
|---|---|---|---|
| ITEM | QTY | PART # | DESCRIPTION |
| 1 | 2 | 120062 | O-Ring Plug, #4 7/16-20 |
| 2 | 1 | 222004 | Valve, Pressure Relief |
| 3 | 4 | 222010 | Cartridge, #8 HYDAC Double Poppet |
| 4 | 1 | 222045 | #10 SOLENOID, 2 POSITION 4 WAY |
| 5 | 4 | 222050 | Coil, #8 Hydac, Deutsch DT04-2P |
| 6 | 2 | 522163 | #10 E-COIL, 12 VDC, DEUTSCH DT04-2P |
| 7 | 2 | 720164 | O-Ring Plug, #8 3/4-16 |
| 8 | 1 | 820232 | Spool, #10 Valve |

| Valve, 3rd Bank add on P/N 223045 | | | |
|---|---|---|---|
| ITEM | QTY | PART # | DESCRIPTION |
| 1 | 4 | 110168 | BOLT, 5/16-18 X 2.0 SHCS |
| 2 | 2 | 120376 | O'RING, -219, 90 DURO |
| 3 | 2 | 222003 | Valve, Poppet N.C. SOL VALVE |
| 4 | 2 | 522163 | #10 E-COIL, 12 VDC, DEUTSCH DT04-2P |

12/5/2014

# GEN 3 VALVE
# -08 EATON DEUTSCH
# SERVICE PARTS

Starting S/N's Late 2015

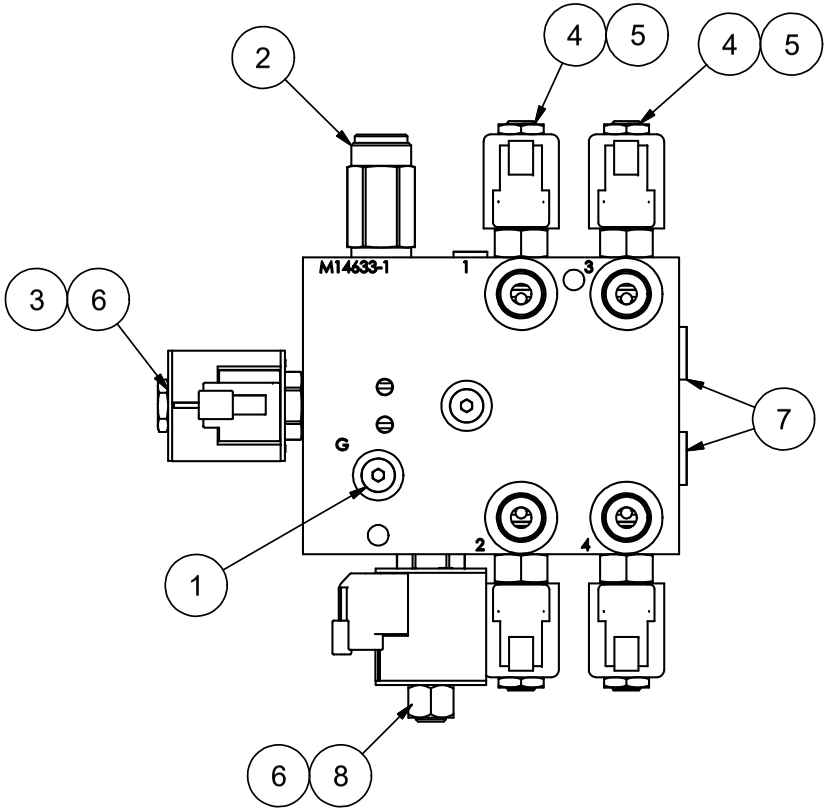


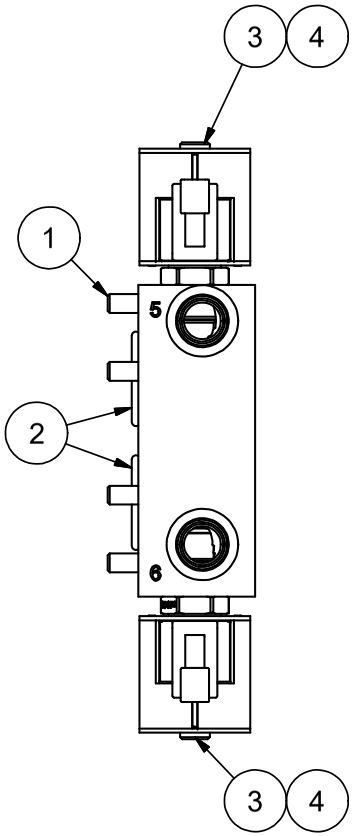


| Flatbed Valve, Small, Eaton Deutsch P/N 223044 | | | |
|---|---|---|---|
| ITEM | QTY | PART # | DESCRIPTION |
| 1 | 3 | 120062 | O-Ring Plug, #4 7/16-20 |
| 2 | 1 | 222004 | Valve, Pressure Relief |
| 3 | 1 | 222045 | #10 SOLENOID, 2 POSITION 4 WAY |
| 4 | 4 | 222056 | Valve, #8 Eaton, Dbl Poppet |
| 5 | 4 | 222057 | Coil, #8 Eaton, 12V, Deutsch DT04-2P |
| 6 | 2 | 522163 | #10 E-COIL, 12 VDC, DEUTSCH DT04-2P |
| 7 | 2 | 720164 | O-Ring Plug, #8 3/4-16 |
| 8 | 1 | 820232 | Spool, #10 Valve |

| Valve, 3rd Bank add on P/N 223045 | | | |
|---|---|---|---|
| ITEM | QTY | PART # | DESCRIPTION |
| 1 | 4 | 110168 | BOLT, 5/16-18 X 2.0 SHCS |
| 2 | 2 | 120376 | O'RING, -219, 90 DURO |
| 3 | 2 | 222003 | Valve, Poppet N.C. SOL VALVE |
| 4 | 2 | 522163 | #10 E-COIL, 12 VDC, DEUTSCH DT04-2P |

8/24/2015

# Flatbed Valve -08 Hydac Deutsch Service Parts

Starting S/N's Late 2016

| Flatbed Valve, Small, Hydac Deutsch P/N 223044 | | | |
|---|---|---|---|
| ITEM | QTY | PART # | DESCRIPTION |
| 1 | 3 | 120062 | O-Ring Plug, #4 7/16-20 |
| 2 | 1 | 222004 | Valve, Pressure Relief |
| 3 | 4 | 222010 | Cartridge, #8 HYDAC Double Poppet |
| 4 | 1 | 222045 | #10 SOLENOID, 2 POSITION 4 WAY |
| 5 | 4 | 222059 | Coil, #8 Hydac, DT04-2P Suppressed |
| 6 | 2 | 720164 | O-Ring Plug, #8 3/4-16 |
| 7 | 1 | 820232 | Spool, #10 Valve |
| 8 | 2 | 922119 | Coil, #10 Hydraforce, DT04-2P Suppressed |

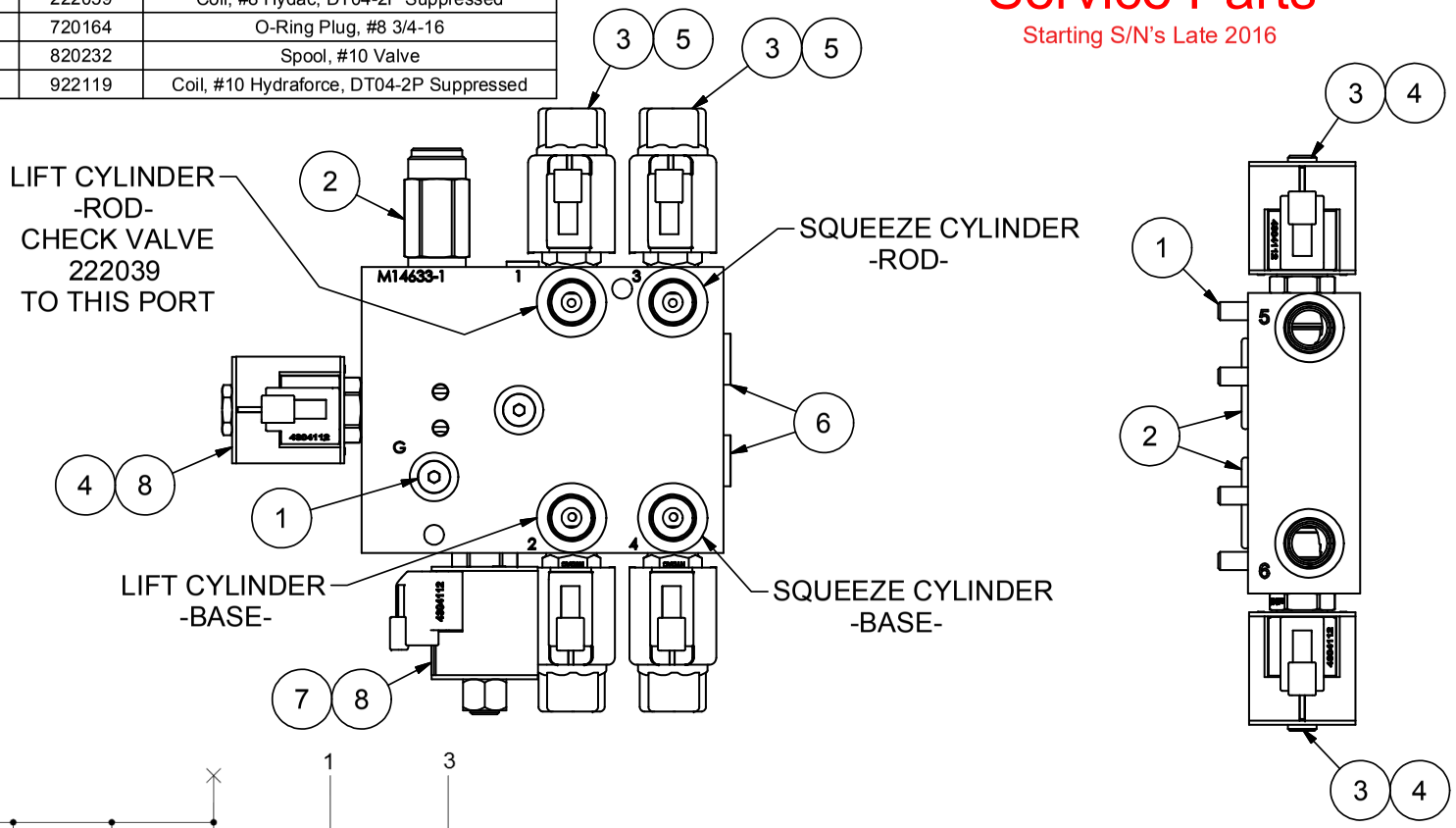


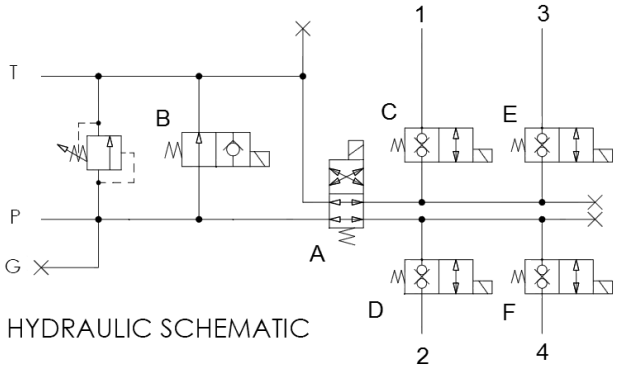


| Valve, 3rd Bank add on P/N 223045 | | | |
|---|---|---|---|
| ITEM | QTY | PART # | DESCRIPTION |
| 1 | 4 | 110168 | BOLT, 5/16-18 X 2.0 SHCS |
| 2 | 2 | 120376 | O'RING, -219, 90 DURO |
| 3 | 2 | 222003 | Valve, Poppet N.C. SOL VALVE |
| 4 | 2 | 922119 | Coil, #10 Hydraforce, DT04-2P Suppressed |

11/9/2016

# HYDRAULIC ASSEMBLY RESERVOIR

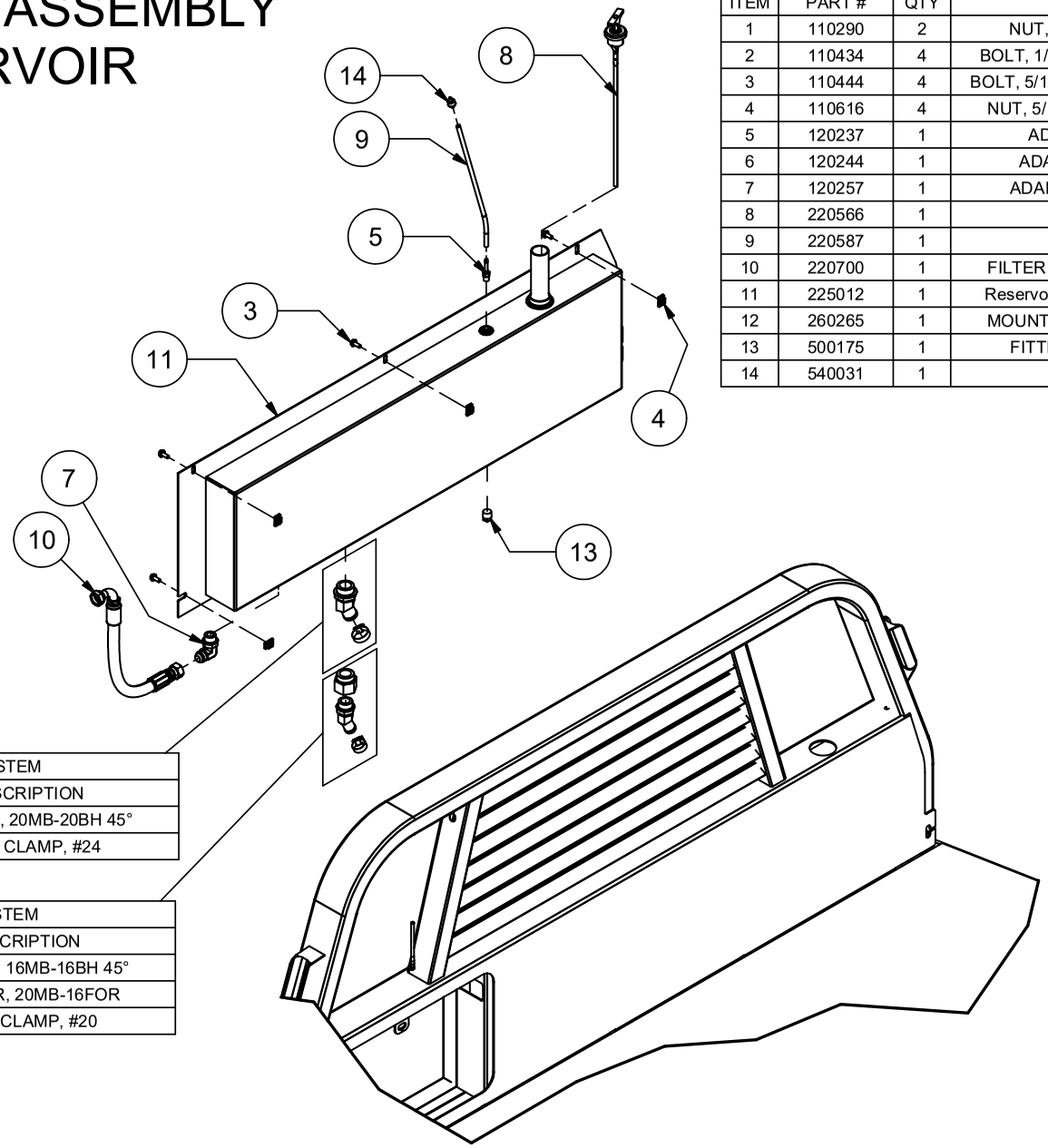


| Parts List | | | |
|---|---|---|---|
| ITEM | PART # | QTY | DESCRIPTION |
| 1 | 110290 | 2 | NUT, 1/4-20 WIZ FLANGE |
| 2 | 110434 | 4 | BOLT, 1/4-20 X 0.5, WIZ FLANGE |
| 3 | 110444 | 4 | BOLT, 5/16-18 X 0.75, WIZ FLANGE |
| 4 | 110616 | 4 | NUT, 5/16", J-TYPE, CAGE, .5C |
| 5 | 120237 | 1 | ADAPTER, 4BH-4MP |
| 6 | 120244 | 1 | ADAPTER, 12MJ-12MP |
| 7 | 120257 | 1 | ADAPTER, 12MJ-12MB90 |
| 8 | 220566 | 1 | DIP STICK |
| 9 | 220587 | 1 | VENT HOSE |
| 10 | 220700 | 1 | FILTER TO RESERVOIR HOSE |
| 11 | 225012 | 1 | Reservoir, Flatbed, Remote Filter |
| 12 | 260265 | 1 | MOUNTING BRACKET, FILTER |
| 13 | 500175 | 1 | FITTING, PLUG 1/2" PIPE |
| 14 | 540031 | 1 | FUEL FILTER |

| 12 & 17 GALLON SYSTEM | | |
|---|---|---|
| PART # | QTY | DESCRIPTION |
| 120189 | 1 | ADAPTER, 20MB-20BH 45° |
| 511002 | 1 | HOSE CLAMP, #24 |

| 5, 7 & 9 GALLON SYSTEM | | |
|---|---|---|
| PART # | QTY | DESCRIPTION |
| 120188 | 1 | ADAPTER, 16MB-16BH 45° |
| 120511 | 1 | ADAPTER, 20MB-16FOR |
| 720107 | 1 | HOSE CLAMP, #20 |

6/15/2012

# Flatbed Non-Proportional Hydraulic Schematic

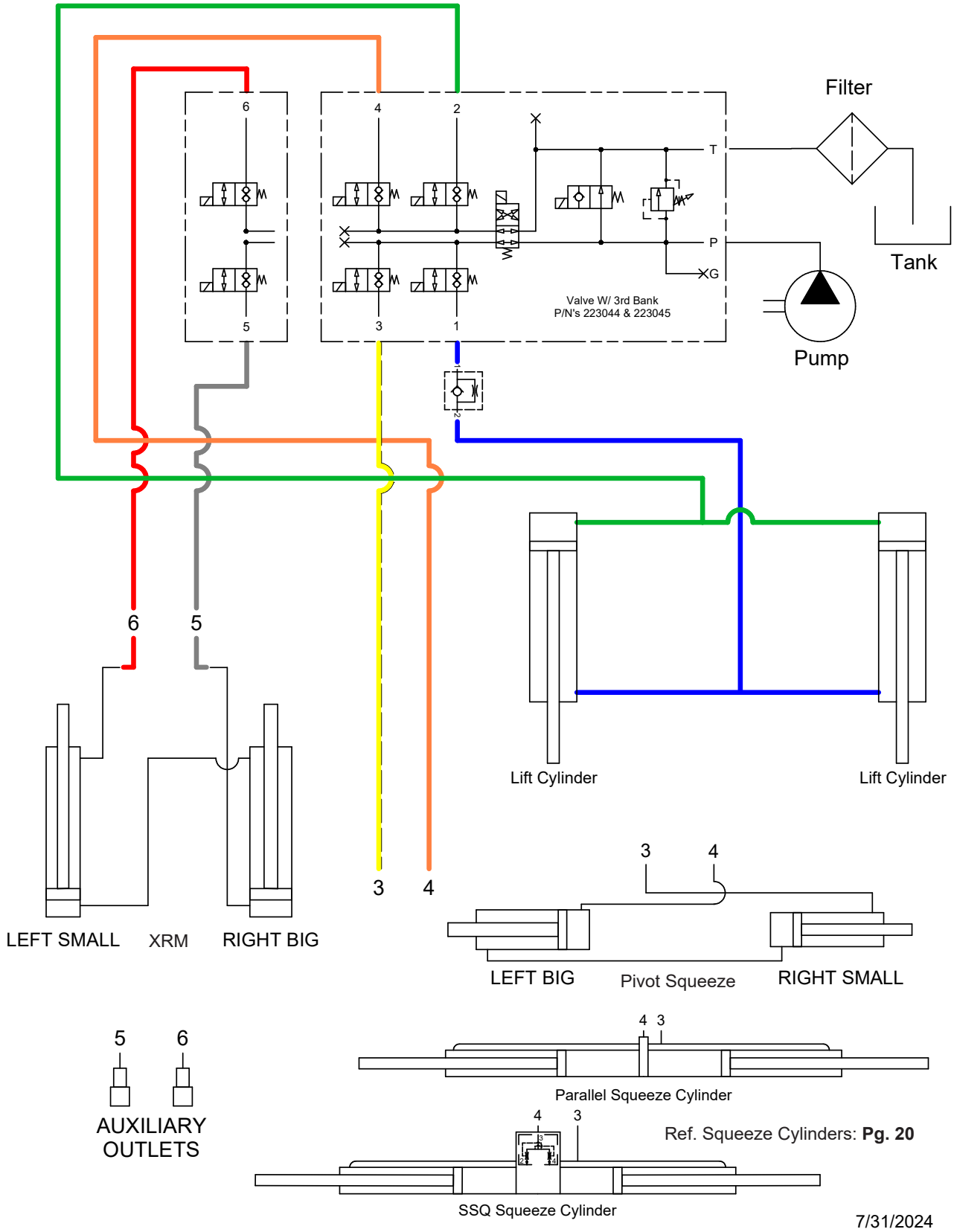


Ref. Squeeze Cylinders: **Pg. 20**

7/31/2024

# Dual Lift XRM Parts

| Dummy Arms | |
|---|---|
| Left & Right | Part # |
| 670 | 215189 |
| 671 | 215384 |
| 675 | 215150 |
| 676 | 215249 |
| 677 | 215191 |
| 679 | 215208 |
| 682 | 215145 |
| 684 | 215193 |
| 687 | 215198 |
| 688 | 215200 |
| 770 | 215210 |
| 778 | 215160 |
| 776 | 215257 |
| 782 | 215158 |
| 784 | 215202 |
| 787 | 215204 |
| 788 | 215206 |

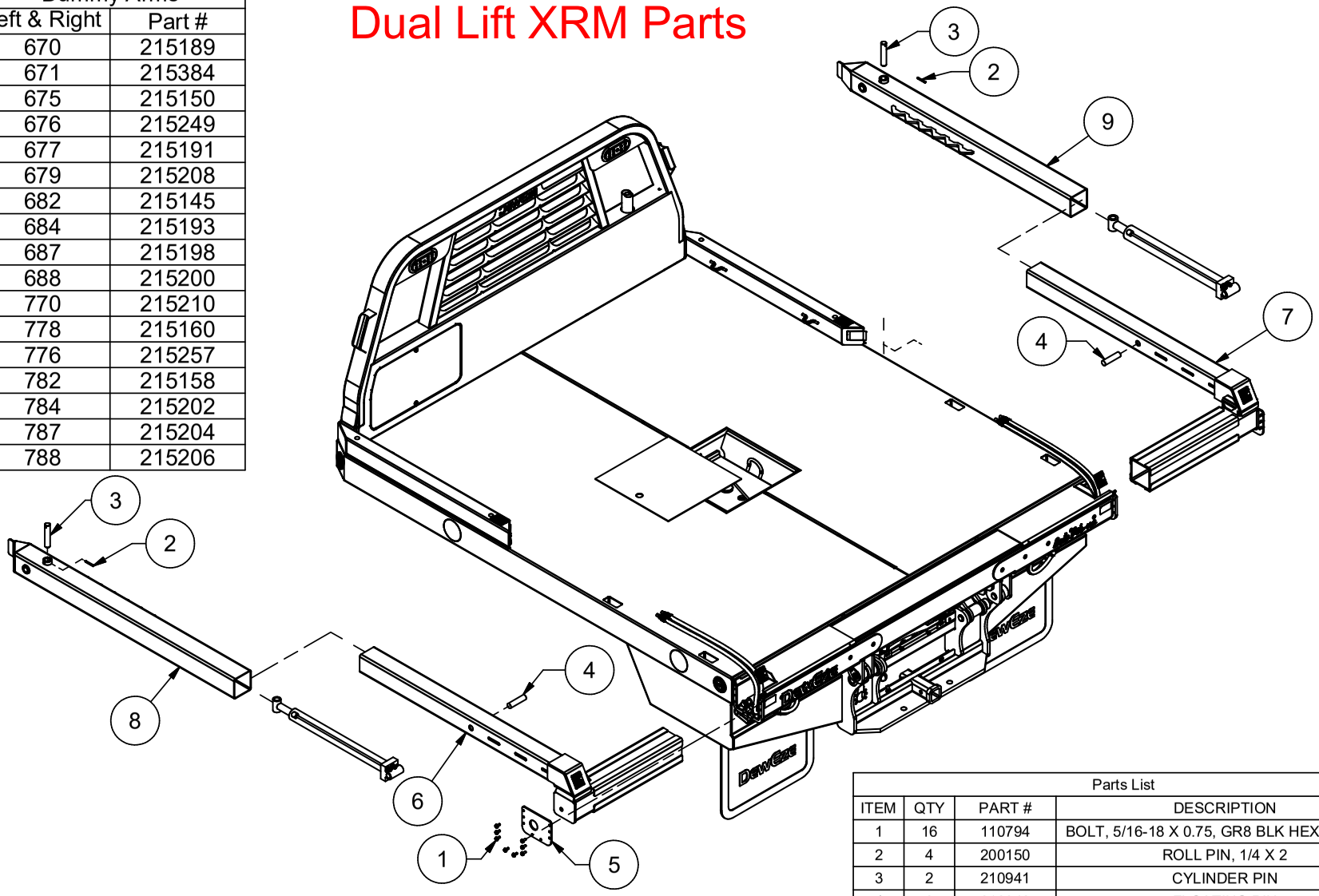


| Crosstubes | | |
|---|---|---|
| Bed Width | Bed #'s | Part # |
| 85.375 | 670, 671, 675, 676, 677 & 679 | 212050 |
| 93.0 | 682, 685, 687 & 688 | 212051 |
| 96.5 | 770, 778, 776, 782, 784, 787 & 788 | 212049 |

| Parts List | | | |
|---|---|---|---|
| ITEM | QTY | PART # | DESCRIPTION |
| 1 | 16 | 110794 | BOLT, 5/16-18 X 0.75, GR8 BLK HEX FLANGE |
| 2 | 4 | 200150 | ROLL PIN, 1/4 X 2 |
| 3 | 2 | 210941 | CYLINDER PIN |
| 4 | 2 | 210942 | FLOATING PIN |
| 5 | 2 | 211755 | CROSSTUBE ENDCAP |
| 6 | 1 | 215085 | Left, Squeeze Arm XRM, Service Part |
| 7 | 1 | 215086 | Right, Squeeze Arm XRM, Service Part |
| 8 | 1 | 215173 | Left, Ext Squeeze Arm, Service Part |
| 9 | 1 | 215174 | Right, Ext Squeeze Arm, Service Part |

6/29/2021

# XRM HYDRAULICS

| Parts List | | | |
|---|---|---|---|
| ITEM | PART # | QTY | DESCRIPTION |
| 1 | 110168 | 4 | BOLT, 5/16-18 X 2.0 SHCS |
| 2 | 120102 | 4 | ADAPTER, BULKHEAD, 6MJ-6MJ, W/LOCKNUT |
| 3 | 120123 | 4 | ADAPTER, 6FP-6FJX |
| 4 | 120134 | 2 | ADAPTER, 6MJ-8MB90 |
| 5 | 120186 | 4 | ADAPTER, 4MB-4FPX |
| 6 | 120376 | 2 | O-RING, -119, 90 DURO |
| 7 | 132035 | 1 | SWITCH BOOT |
| 8 | 220455 | 1 | EXTENDABLE ARM CYLINDER, 2.5 |
| 9 | 220456 | 1 | EXTENDABLE ARM CYLINDER, 2.0 |
| 10 | 223017 | 1 | VALVE, 3rd BANK ADD ON |
| 11 | 232086 | 1 | SWITCH, DPDT, M, 6 PIN, PUSH ON |

**SEAL KITS**

| | |
|---|---|
| 2.5 CYLINDER | 220532 |
| 2.0 CYLINDER | 220533 |

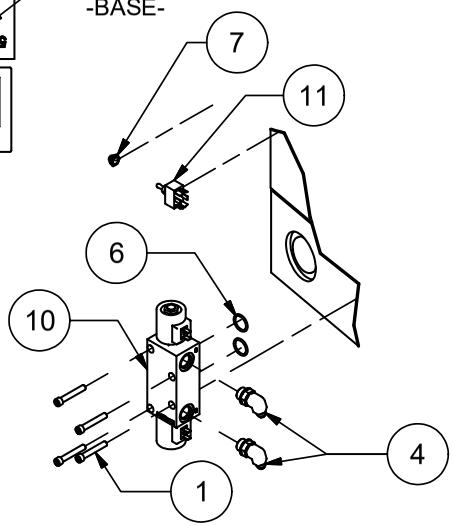


DETAIL C

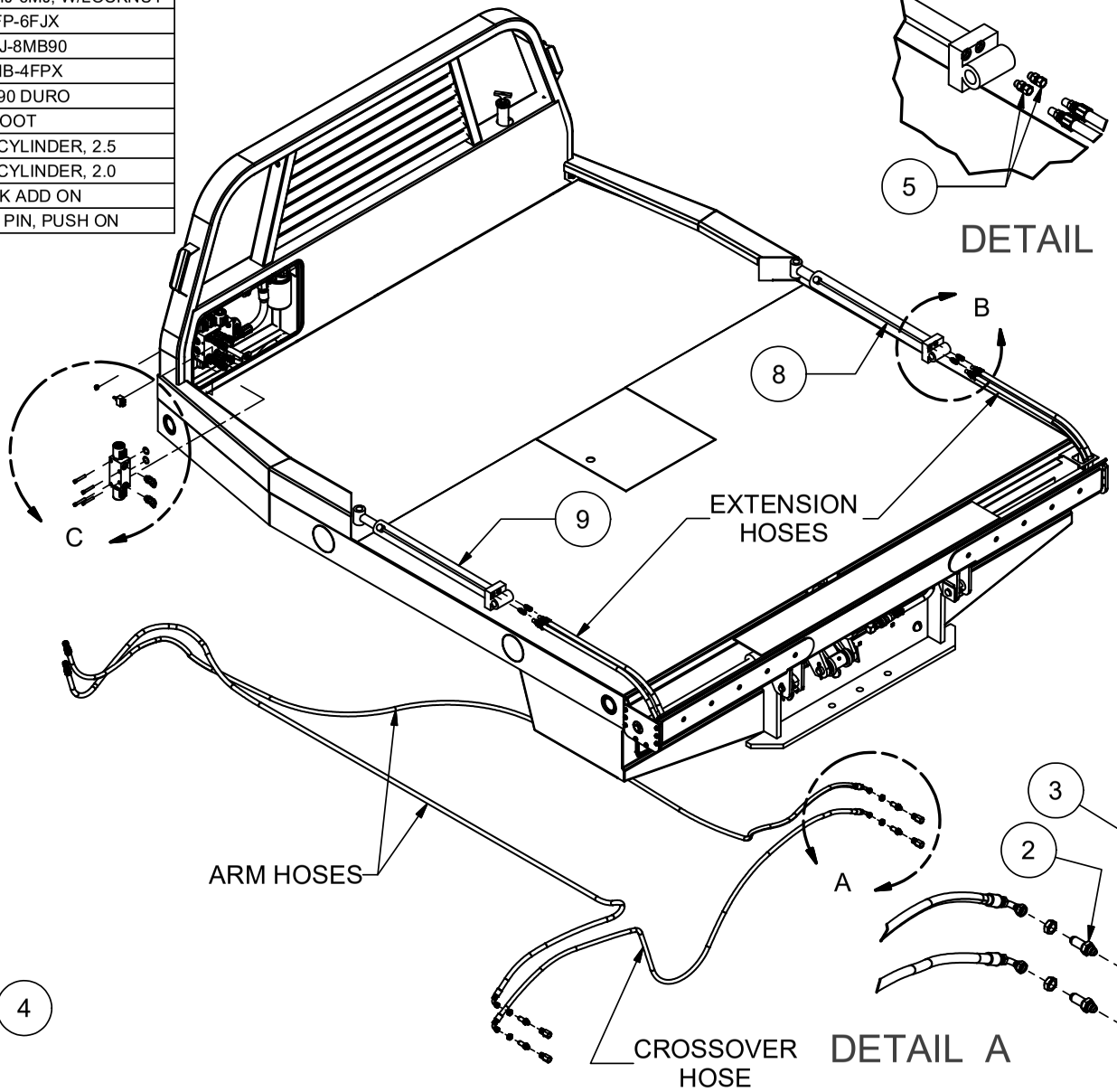





DETAIL B

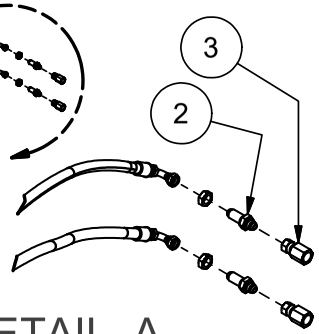


DETAIL A

3/2/2011

# XRM Hydraulics
update 2012

| Parts List | | | |
|---|---|---|---|
| ITEM | QTY | PART # | DESCRIPTION |
| 1 | 4 | 110168 | BOLT, 5/16-18 X 2.0 SHCS |
| 2 | 2 | 120134 | ADAPTER, 6MJ-8MB90 |
| 3 | 2 | 120376 | O'RING, -219, 90 DURO |
| 4 | 1 | 132035 | SWITCH BOOT |
| 5 | 1 | 132127 | Switch, Toggle, DPDT, (On)-OFF-(ON) |
| 6 | 4 | 120102 | ADAPTER, BULKHEAD, 6MJ-6MJ |
| 7 | 4 | 120123 | ADAPTER, 6FP-6FJX |
| 8 | 4 | 120186 | ADAPTER, 4MB-4FPX |
| 9 | 2 | 120598 | ADAPTER, 6MJ-6FJX 90 BENT TUBE |
| 10 | 2 | 120599 | ADAPTER, 6MJ-6FJX 90 LONG BENT TUBE |
| 11 | 1 | 220455 | EXTENSION CYLINDER 2.5 |
| 12 | 1 | 220456 | EXTENSION CYLINDER 2.0 |
| 13 | 1 | 223017 | VALVE, 3rd BANK ADD ON |

**SEAL KITS**

| | |
|---|---|
| 2.5 CYLINDER | 220532 |
| 2.0 CYLINDER | 220533 |

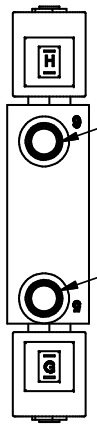


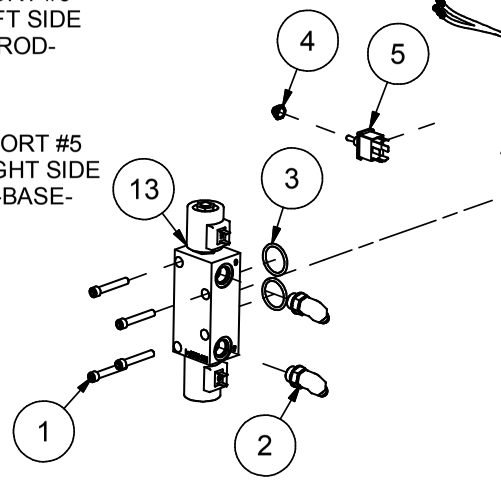


DETAIL C

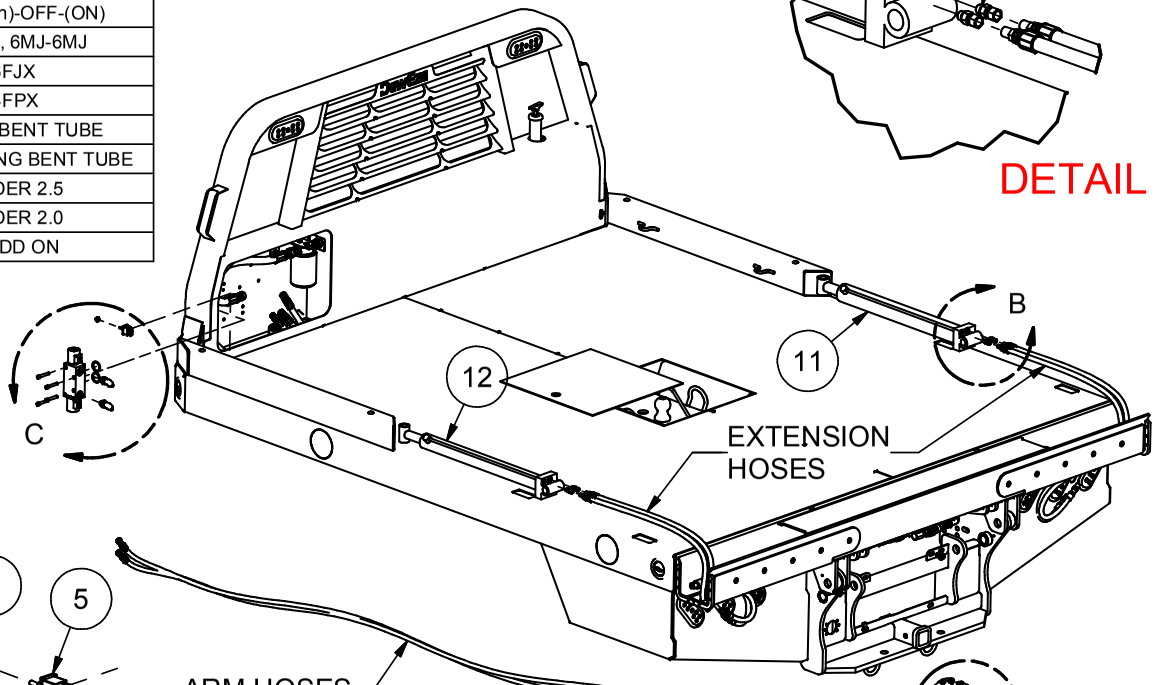


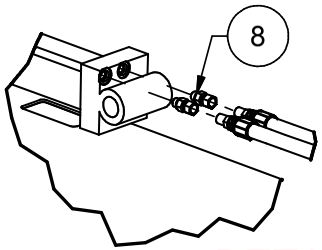


DETAIL B

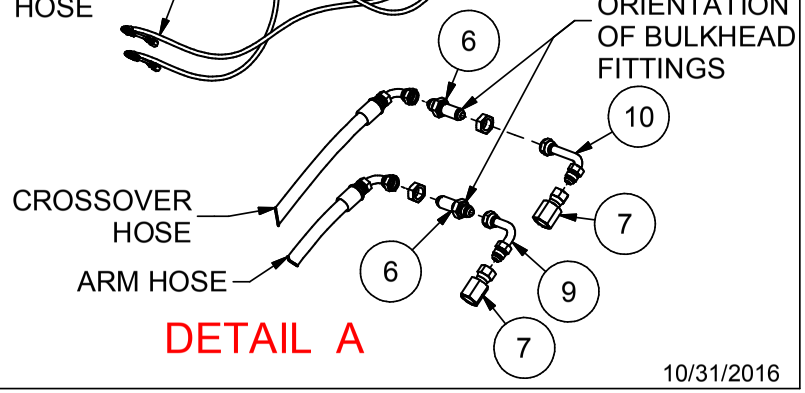


DETAIL A

10/31/2016

# XRM HYDRAULICS

| XRM SERIES | ARM HOSES 6M3K - 6FJX90M / 6FJX | EXTENSION HOSES 6M3K - 6-4MP / 6MPX | CROSSOVER HOSE 6M3K - 6FJX90M | HYDRAULIC HOSE KIT # |
|---|---|---|---|---|
| **470, 670** | 2ea 220625 (148in) | 4ea 220605 (54.3in) | 220601 (79.6in) | **223011** |
| **475, 675, 676** | 2ea 220626 (164in) | 4ea 220605 (54.3in) | 220601 (79.6in) | **223010** |
| **477, 479, 482, 484, 677, 679** | 2ea 220627 (174in) | 4ea 220605 (54.3in) | 220601 (79.6in) | **223009** |
| **487, 488** | 2ea 220629 (200in) | 4ea 220605 (54.3in) | 220601 (79.6in) | **223007** |
| **578, 770, 778, 776** | 2ea 220626 (164in) | 4ea 220605 (54.3in) | 220645 (94.0in) | **223021** |
| **582, 682, 684, 782, 784** | 2ea 220627 (174in) | 4ea 220605 (54.3in) | 220645 (94.0in) | **223022** |
| **587, 687, 688, 787, 788** | 2ea 220629 (200in) | 4ea 220605 (54.3in) | 220645 (94.0in) | **223023** |

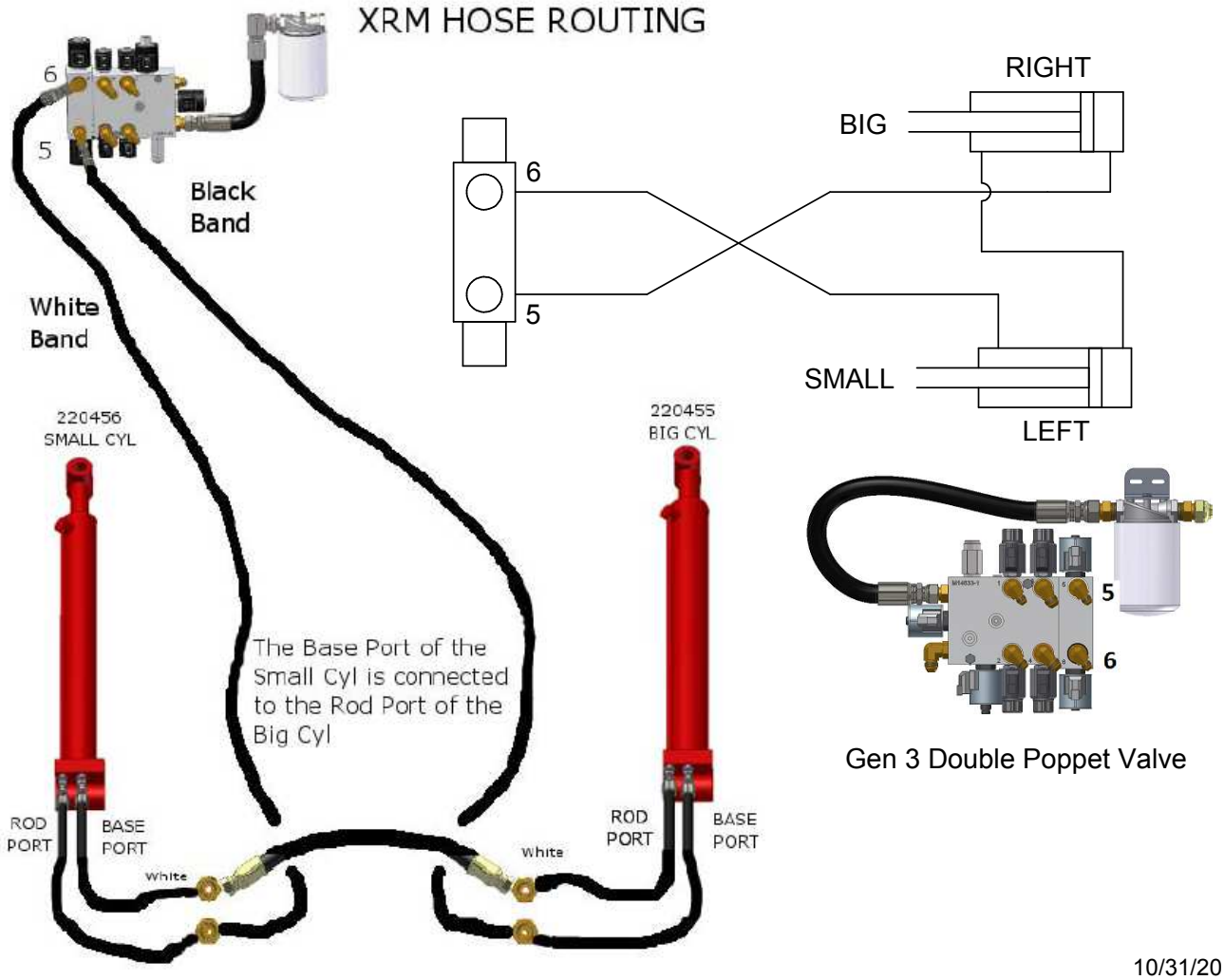


10/31/2016

# Deweze Parallel XRM Cylinder Assembly

| Dual Lift Cylinders |
|---|
| Production Part# 223038 |
| Seal Kit Part# 212012 |

| Squeeze Cylinders | | |
|---|---|---|
| Bed Width | Bed #'s | Part # |
| 85.3.75 | 67-- | 220002 |
| 93.0 | 68-- | 223032 |
| 96.5 | 7---- | 223001 |
| SSQ | | 223026 |

| Squeeze Cyl Seal Kit |
|---|
| Part# 220056 |

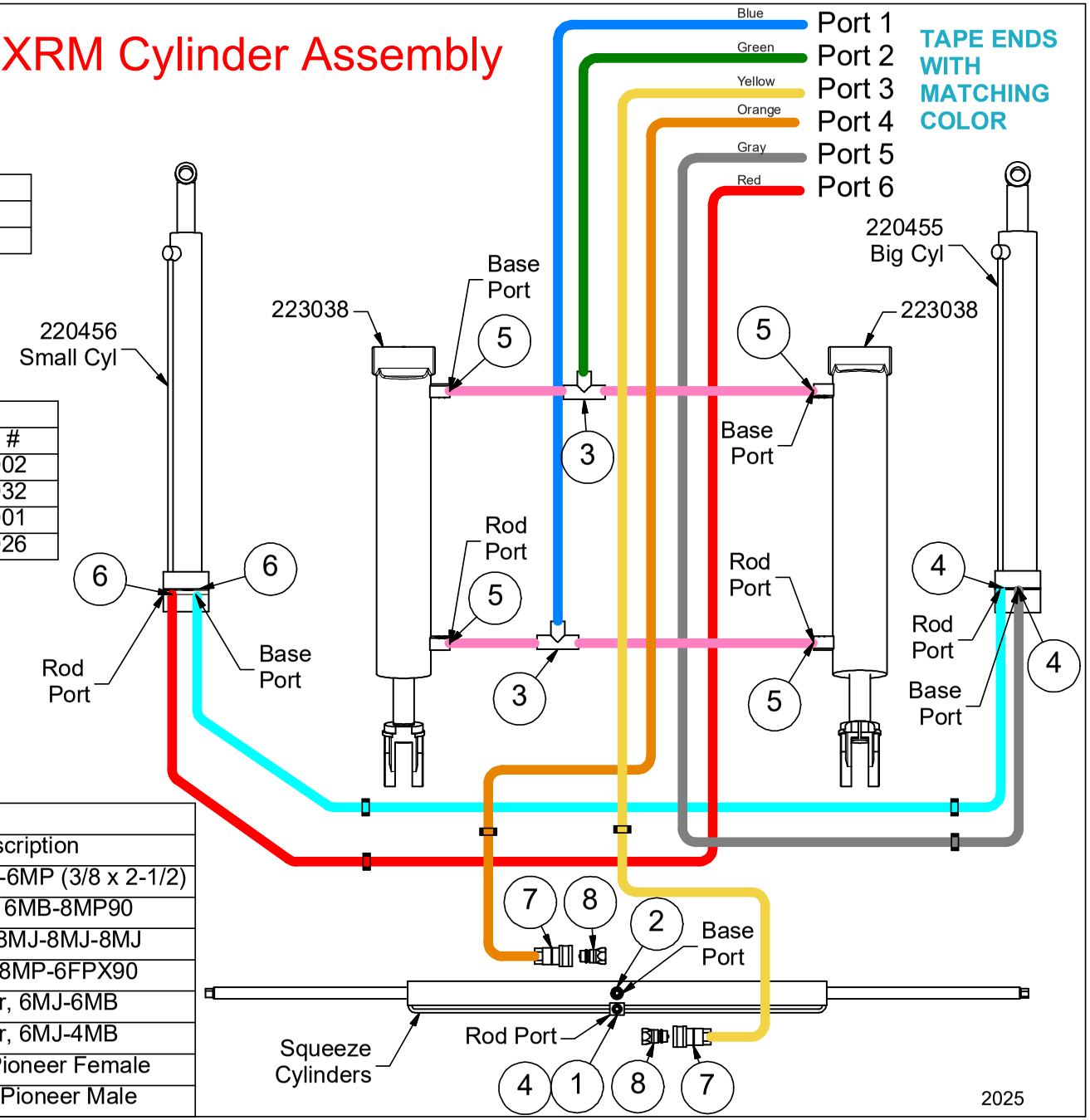


| Fittings Table | | | |
|---|---|---|---|
| Item | Qty | Part # | Description |
| 1 | 1 | 120078 | Adapter, 6MB-6MP (3/8 x 2-1/2) |
| 2 | 1 | 120147 | Adapter, 6MB-8MP90 |
| 3 | 2 | 120242 | Adapter, 8MJ-8MJ-8MJ |
| 4 | 1 | 120311 | Adapter, 8MP-6FPX90 |
| 5 | 8 | 120319 | Adapter, 6MJ-6MB |
| 6 | 4 | 120665 | Adaptor, 6MJ-4MB |
| 7 | 2 | 220084 | Coupler, Pioneer Female |
| 8 | 2 | 420005 | Coupler, Pioneer Male |

# RF Control & Manual Switches

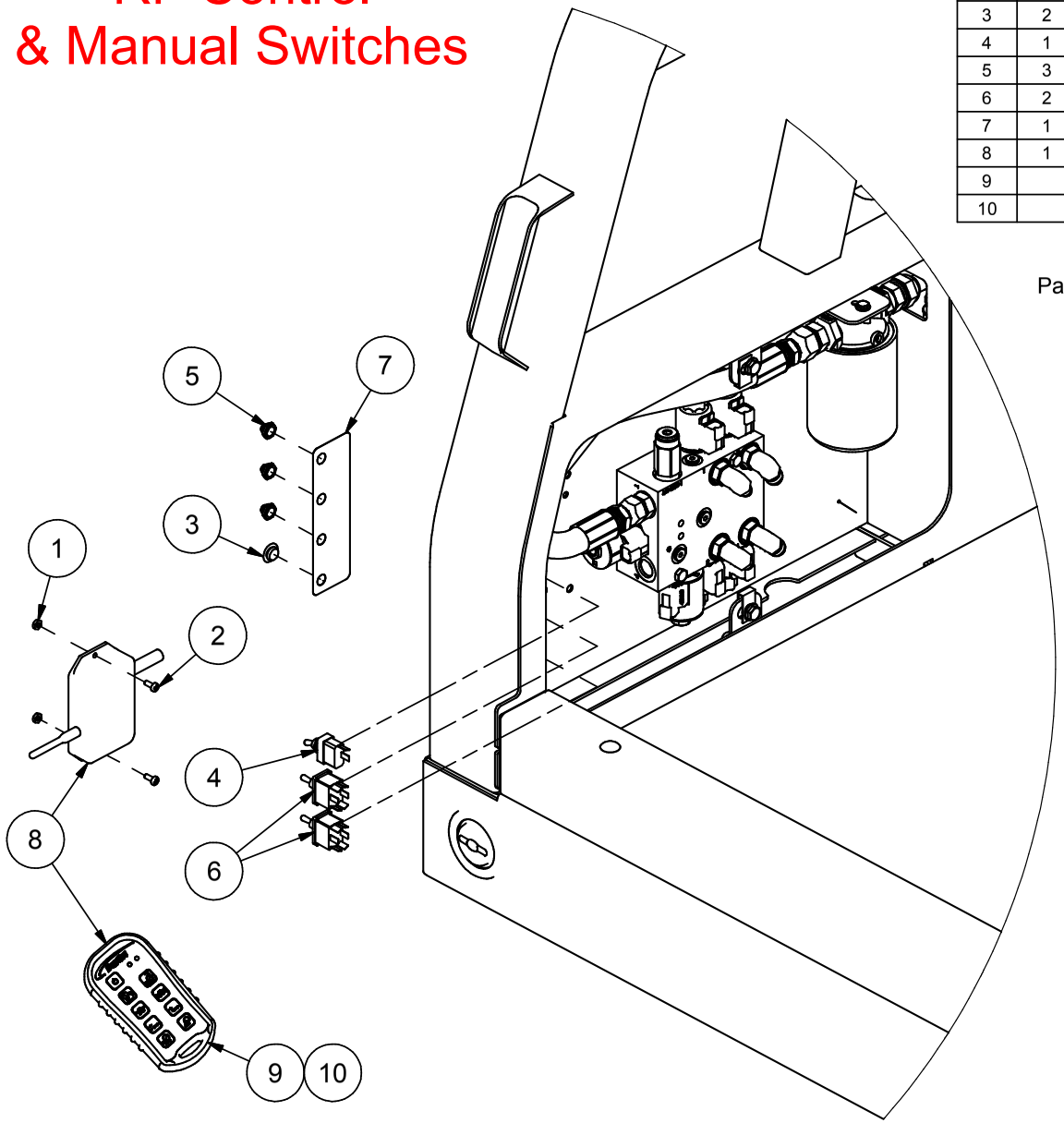


| Parts List | | | |
|---|---|---|---|
| ITEM | QTY | PART # | DESCRIPTION |
| 1 | 3 | 110119 | NUT, 10-24 LOCK |
| 2 | 3 | 110264 | BOLT, 10-24 X .5 STAINLESS, PHILLIPS |
| 3 | 2 | 110753 | PLUG, 1/2" BUTTON PLASTIC |
| 4 | 1 | 132027 | Switch, Spst, Toggle .250 Tab |
| 5 | 3 | 132035 | SWITCH BOOT |
| 6 | 2 | 132127 | Switch, Toggle, DPDT, (On)-OFF-(ON) |
| 7 | 1 | 202003 | DECAL, SWITCH IDENTIFICATION |
| 8 | 1 | 233003 | Transmitter & Receiver, Kar-Tech |
| 9 | | 233004 | Transmitter, Kar-Tech |
| 10 | | | Two AA Batteries |

Part # 132134

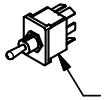

Note: Optional Latching Switch On-Off-On is Available

11/15/2016

| ITEM | QUAN | PART # | NAME |
|---|---|---|---|
| 1 | 1 | 132044 | SWITCH, SPST ROCKER LED |
| 2 | 1 | 702002 | DECAL, DEWEZE HYDRAULICS |
| 3 | 1 | 702061 | DECAL, PUMP CLUTCH |
| 4 | 1 | 732002 | HARNESS, CLUTCH CONTROL |

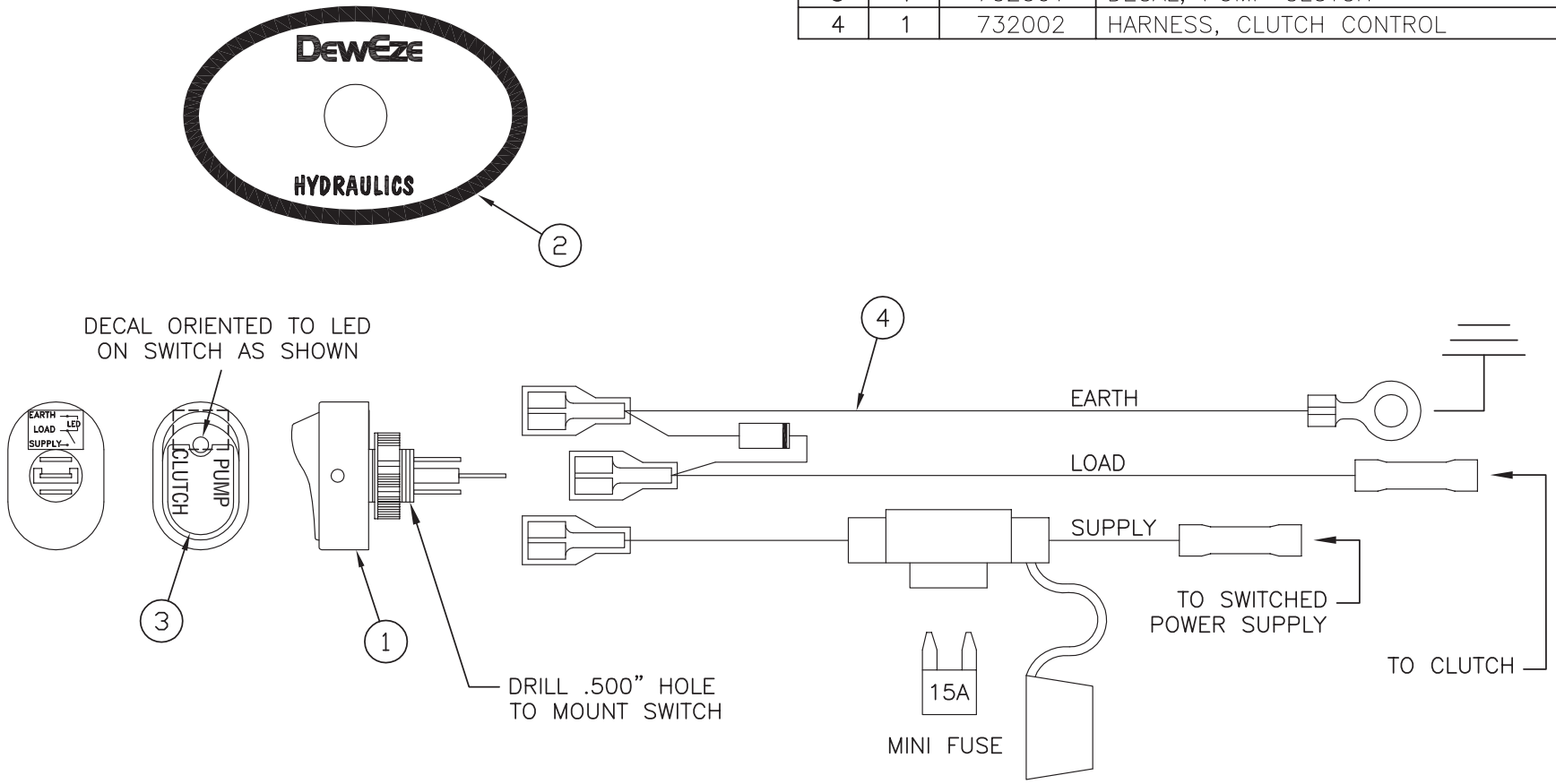


SWITCH, CLUTCH CONTROL ASSY 735001

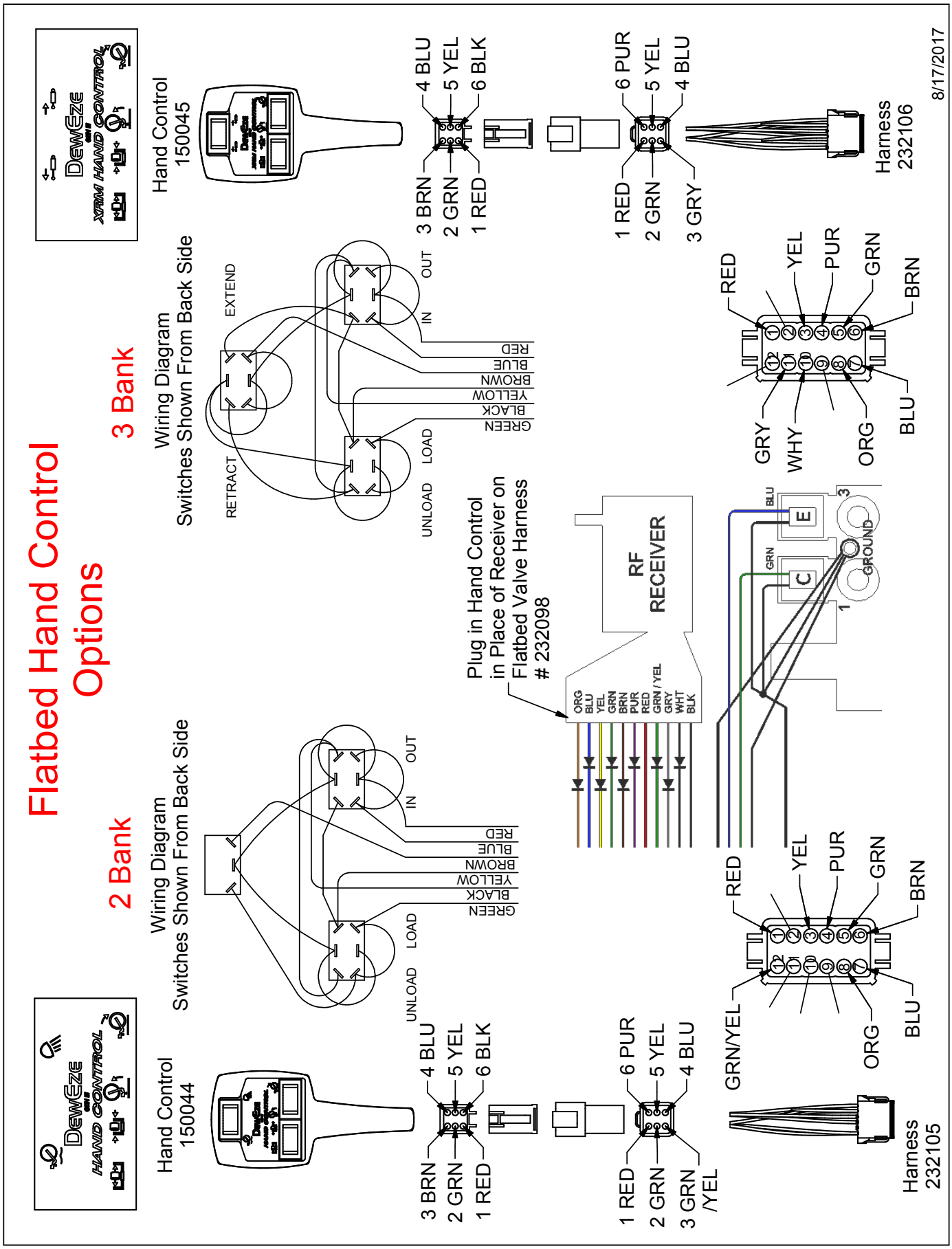
Flatbed Hand Control Options
2 Bank
Wiring Diagram
Switches Shown From Back Side
Hand Control
150044
3 Bank
Wiring Diagram
Switches Shown From Back Side
Hand Control
150045
EXTEND
RETRACT
UNLOAD
LOAD
IN
OUT
GREEN
BLACK
YELLOW
BROWN
BLUE
RED
3 BRN
2 GRN
1 RED
4 BLU
5 YEL
6 BLK
1 RED
2 GRN
3 GRN /YEL
6 PUR
5 YEL
4 BLU
1 RED
2 GRN
3 GRY
Harness
232105
Harness
232106
GRN/YEL
ORG
BLU
RED
YEL
PUR
GRN
BRN
GRY
WHY
ORG
BLU
Plug in Hand Control
in Place of Receiver on
Flatbed Valve Harness
# 232098
RF
RECEIVER
ORG
BLU
YEL
GRN
BRN
PUR
RED
GRN / YEL
GRY
WHT
BLK
E
C
GROUND
8/17/2017

150044 REV:

# HAND CONTROL & CABLE: 2 BANK

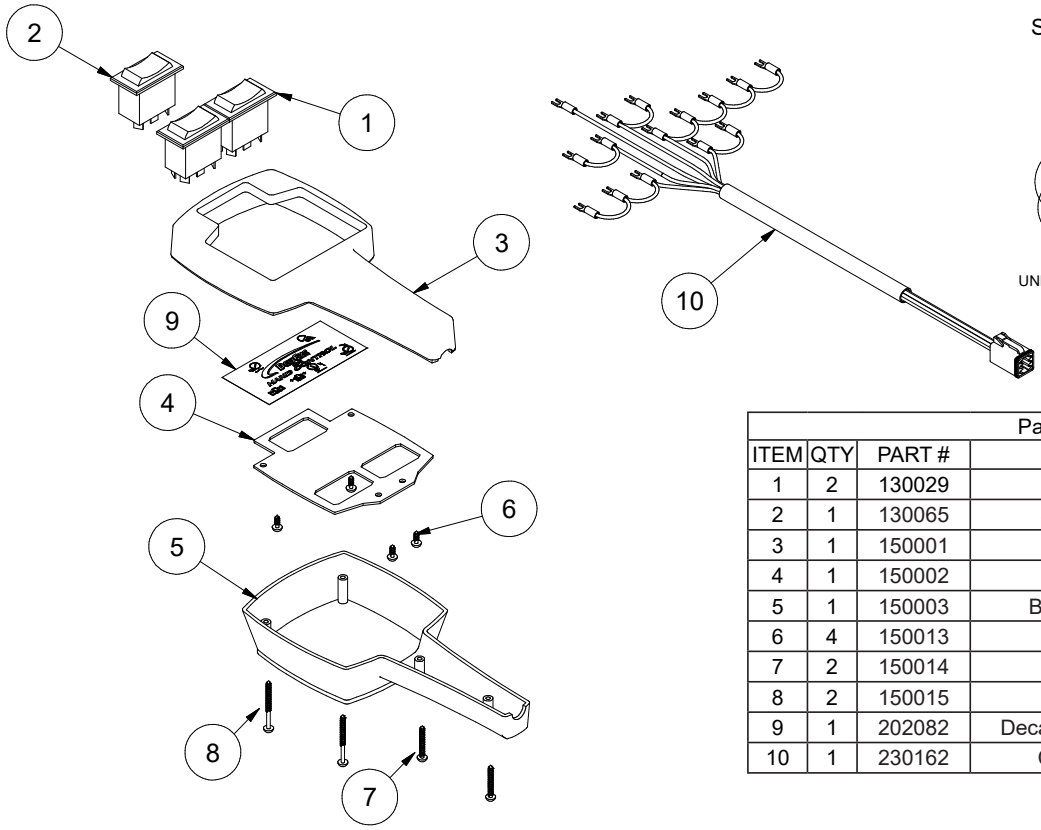


Wiring Diagram
Switches Shown From Back Side

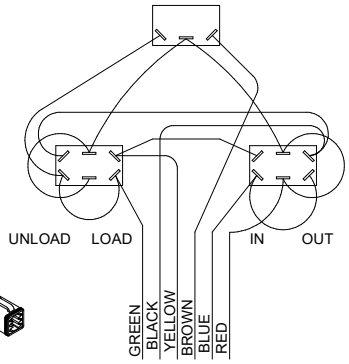


Parts List Kit: 150044

| ITEM | QTY | PART # | DESCRIPTION |
|---|---|---|---|
| 1 | 2 | 130029 | Switch, Rocker, DPDT |
| 2 | 1 | 130065 | Switch, Rocker, On-Off-(On) |
| 3 | 1 | 150001 | Top Housing, Hand Control |
| 4 | 1 | 150002 | Switch Plate, Hand Control |
| 5 | 1 | 150003 | Bottom Housing, Hand Control |
| 6 | 4 | 150013 | Screw, #6 X 1/4 Type F |
| 7 | 2 | 150014 | Screw, #6 X 1 Sheetmetal |
| 8 | 2 | 150015 | Screw, #6 X 1.5 Sheetmetal |
| 9 | 1 | 202082 | Decal, Hand Control, 2 Bank, Gen III |
| 10 | 1 | 230162 | Cable, Hand Control, 2 Bank |

150045 REV:

# HAND CONTROL & CABLE: 3 BANK

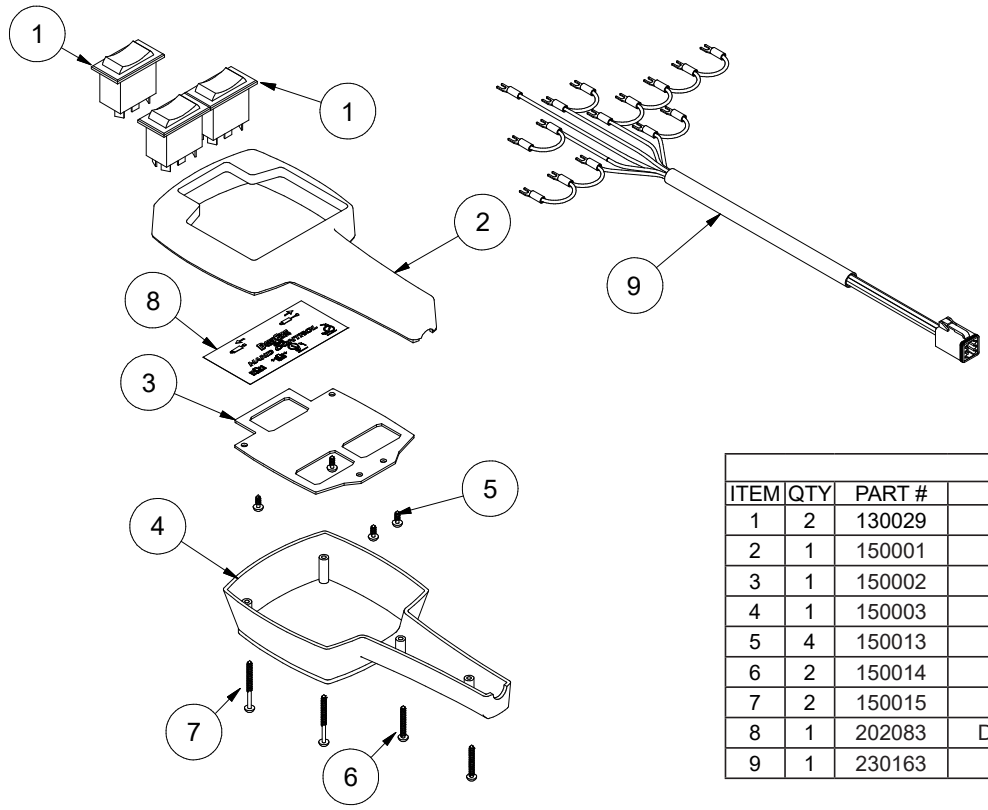


Wiring Diagram
Switches Shown From Back Side

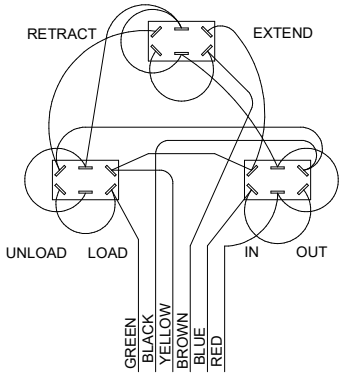


Parts List Kit: 150045

| ITEM | QTY | PART # | DESCRIPTION |
|---|---|---|---|
| 1 | 2 | 130029 | Switch, Rocker, DPDT |
| 2 | 1 | 150001 | Top Housing, Hand Control |
| 3 | 1 | 150002 | Switch Plate, Hand Control |
| 4 | 1 | 150003 | Bottom Housing, Hand Control |
| 5 | 4 | 150013 | Screw, #6 X 1/4 Type F |
| 6 | 2 | 150014 | Screw, #6 X 1 Sheetmetal |
| 7 | 2 | 150015 | Screw, #6 X 1.5 Sheetmetal |
| 8 | 1 | 202083 | Decal, Hand Control, 3 Bank, Gen III |
| 9 | 1 | 230163 | Cable, Hand Control, 3 Bank |

# Lights & Harness

For S/N's after 12A01
Thru June 2018

| Parts List | | | |
|---|---|---|---|
| ITEM | QTY | PART # | DESCRIPTION |
| 1 | 4 | 230135 | GROMMET, 2" |
| 2 | 8 | 232060 | LIGHT, GROMMET OVAL |
| 3 | 6 | 232070 | LIGHT, OVAL LED, S/T/T |
| 4 | 2 | 232071 | LIGHT, OVAL LED, BACK-UP |
| 5 | 2 | 232072 | LIGHT, 2" ROUND LED, AMBER |
| 6 | 2 | 232073 | LIGHT, 2" ROUND LED, RED |
| 7 | 3 | 232091 | LIGHT, 3/4" ROUND, LED, RED |
| 8 | 2 | 235016 | LIGHT, LICENSE PLATE, LED W/.180 BULLETS |

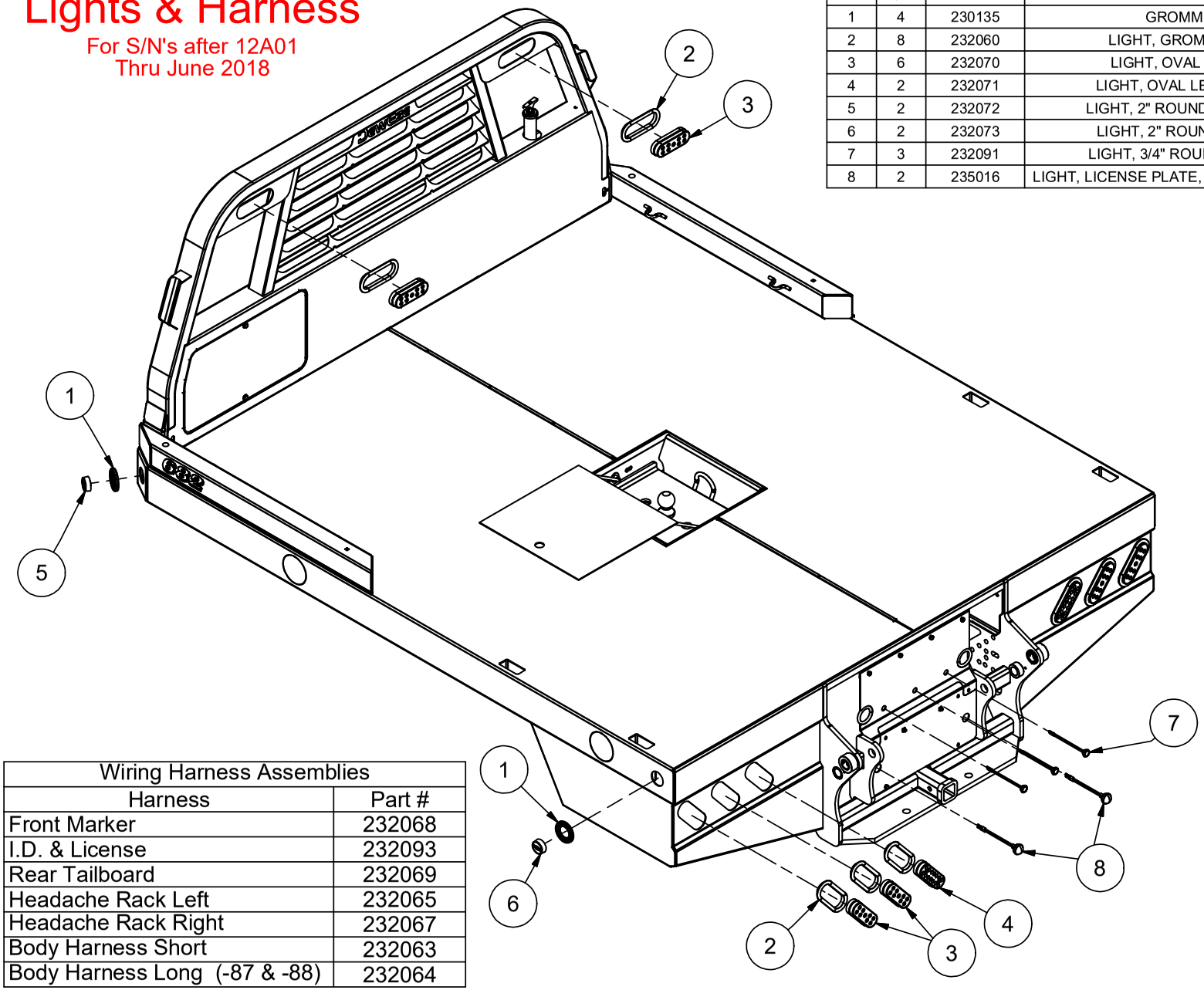


| Wiring Harness Assemblies | |
|---|---|
| Harness | Part # |
| Front Marker | 232068 |
| I.D. & License | 232093 |
| Rear Tailboard | 232069 |
| Headache Rack Left | 232065 |
| Headache Rack Right | 232067 |
| Body Harness Short | 232063 |
| Body Harness Long (-87 & -88) | 232064 |

9/18/2014

# Lights & Harness

For S/N's after June 2018

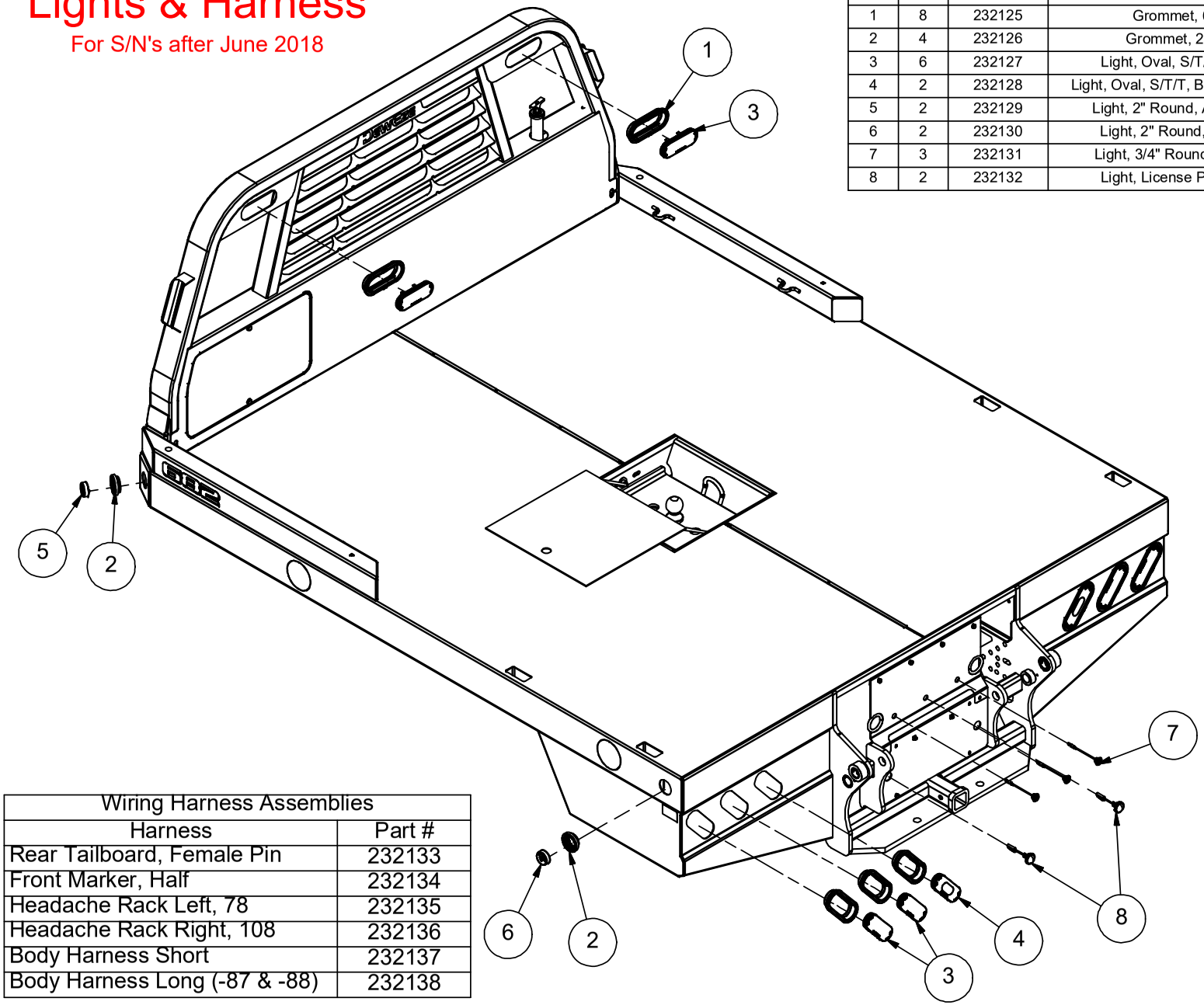


| Parts List | | | |
|---|---|---|---|
| ITEM | QTY | PART # | DESCRIPTION |
| 1 | 8 | 232125 | Grommet, 6" Oval, Grote |
| 2 | 4 | 232126 | Grommet, 2" Round, Grote |
| 3 | 6 | 232127 | Light, Oval, S/T/T, Male Pin, Grote |
| 4 | 2 | 232128 | Light, Oval, S/T/T, BackUp, Male Pin, Grote |
| 5 | 2 | 232129 | Light, 2" Round, Amber, Grote 47113 |
| 6 | 2 | 232130 | Light, 2" Round, Red, Grote 47112 |
| 7 | 3 | 232131 | Light, 3/4" Round, Red, Grote 49332 |
| 8 | 2 | 232132 | Light, License Plate, w/Plug, Grote |

| Wiring Harness Assemblies | |
|---|---|
| Harness | Part # |
| Rear Tailboard, Female Pin | 232133 |
| Front Marker, Half | 232134 |
| Headache Rack Left, 78 | 232135 |
| Headache Rack Right, 108 | 232136 |
| Body Harness Short | 232137 |
| Body Harness Long (-87 & -88) | 232138 |

6/8/2018

# Decals
# Safety & Operation

| PART # | QTY | DESCRIPTION |
|---|---|---|
| 200010 | 4 | DANGER DECAL, HORIZONTAL |
| 202114 | 1 | BALE PIK-UP, SCRIPT, WARM SILVER |
| 200144 | 2 | DANGER DECAL, VERTICAL |
| 202118 | 1 | DEWEZE, OUTLINE, WARM SILVER |
| 200190 | 6 | REFLECTIVE DECAL |
| 202003 | 1 | DECAL, SWITCH IDENTIFICATION |
| 202052 | 1 | DECAL, DOUBLE POPPET VALVE |
| 202053 | 1 | DECAL, WIRING DIAGRAM, KAR-TECH REMOTE |
| 202054 | 1 | DECAL, 3rd BANK OPTION, KAR-TECH REMOTE |
| 300002 | 1 | FEMA DECAL |

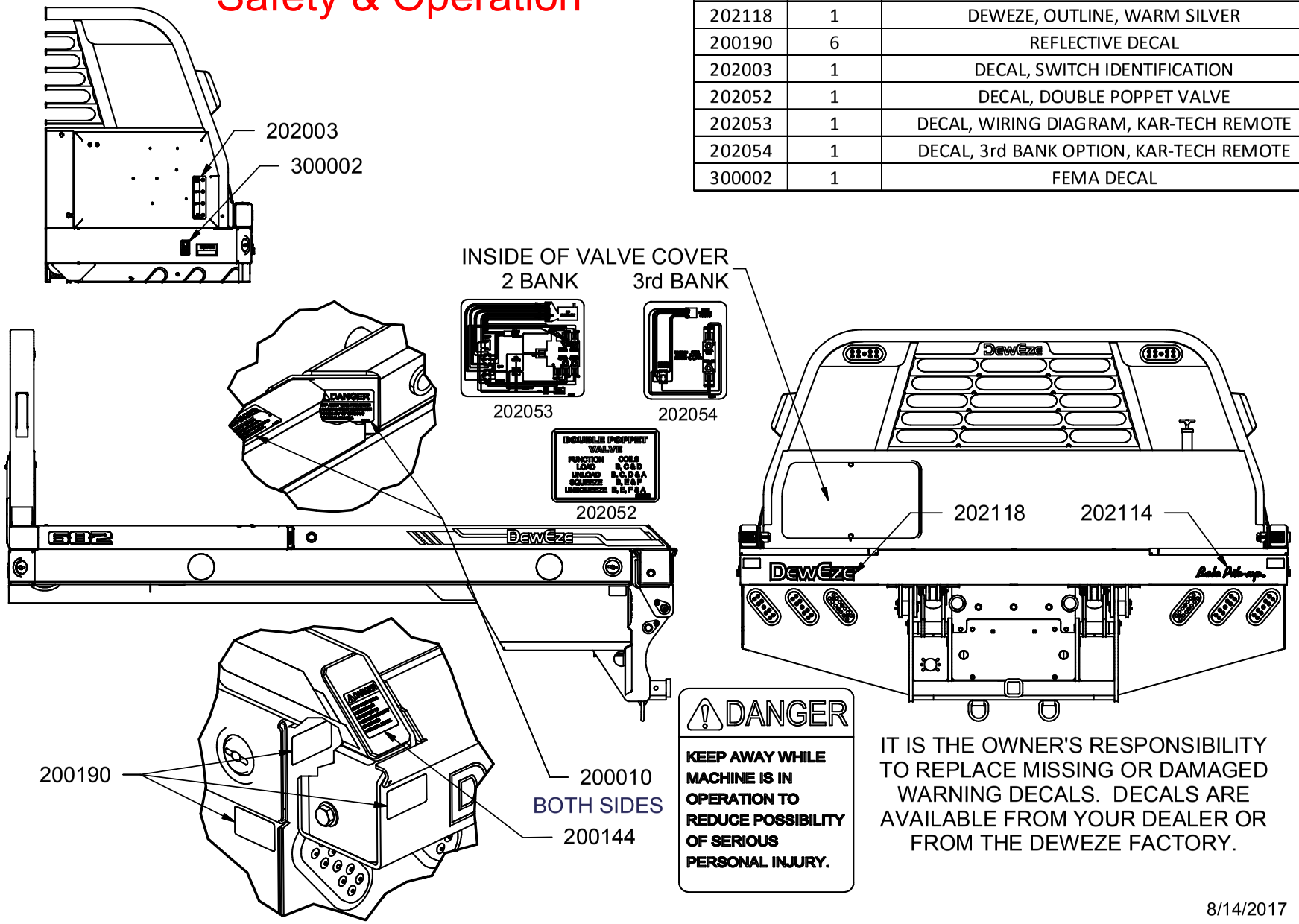


**DANGER**

**KEEP AWAY WHILE MACHINE IS IN OPERATION TO REDUCE POSSIBILITY OF SERIOUS PERSONAL INJURY.**

IT IS THE OWNER'S RESPONSIBILITY TO REPLACE MISSING OR DAMAGED WARNING DECALS. DECALS ARE AVAILABLE FROM YOUR DEALER OR FROM THE DEWEZE FACTORY.

8/14/2017

# 600 & 700 Series Decals

* Model # Decals Must be Ordered Seperately

| Model # Decals | | |
|---|---|---|
| Left & Right | Part # | Qty |
| 670 | 202094 | 2 |
| 671 | 202129 | 2 |
| 675 | 202095 | 2 |
| 676 | 202096 | 2 |
| 677 | 202097 | 2 |
| 679 | 202098 | 2 |
| 682 | 202099 | 2 |
| 684 | 202100 | 2 |
| 687 | 202101 | 2 |
| 688 | 202102 | 2 |
| 770 | 202103 | 2 |
| 778 | 202105 | 2 |
| 776 | 202104 | 2 |
| 782 | 202106 | 2 |
| 784 | 202107 | 2 |
| 787 | 202108 | 2 |
| 788 | 202109 | 2 |

| Decal Kit, 6-700 Series Part # 205133 | | |
|---|---|---|
| Part # | Qty | Description |
| 200010 | 4 | Decal, Danger Red On White |
| 202114 | 1 | Decal, Bale Pik-up Script, Warm Silver |
| 200144 | 2 | Decal, Danger Vertical |
| 202118 | 1 | Decal, Deweze Outline, Warm Silver |
| 200190 | 6 | Decal, Red Reflector, Rectangle |
| 202093 | 34 ft. | Decal, Pin Stripe, Warm Silver |
| 202111 | 1 | Decal, Squeeze Arm, Left |
| 202112 | 1 | Decal, Squeeze Arm, Right |
| 400014 | 2 | Decal, Shield Removed |

XRM
202115

SSQ
202006

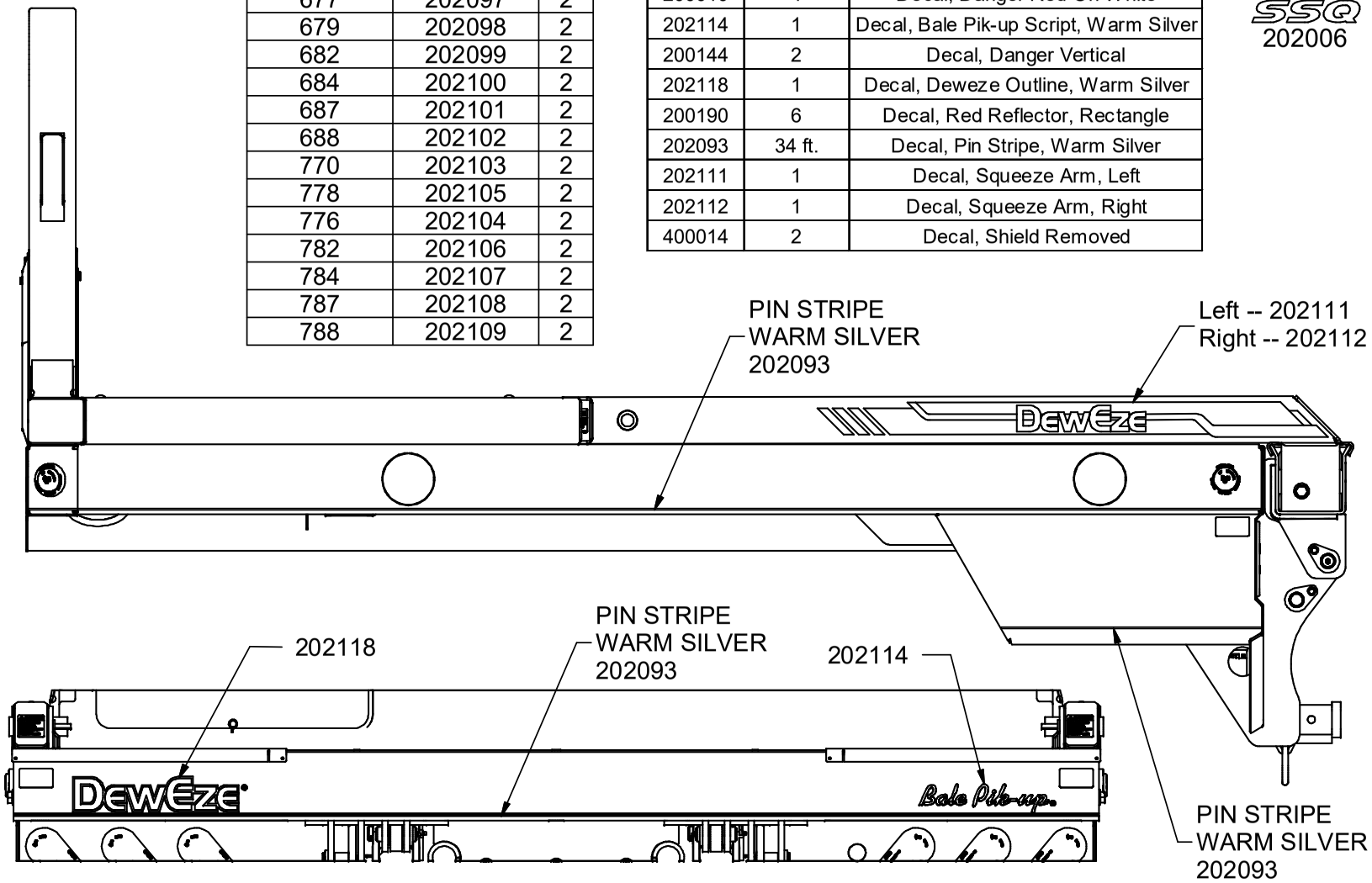


12/7/2021

# Flatbed Accessories
# Swingout Lights

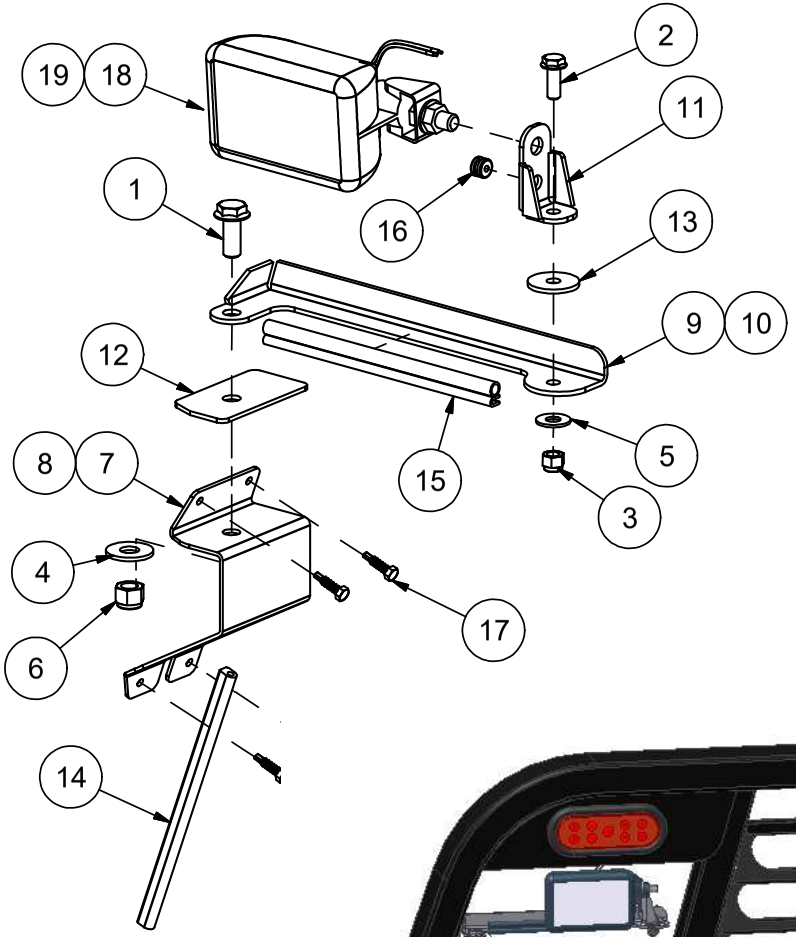


| Swing Light Kit, Part# 205013 | | | |
|---|---|---|---|
| ITEM | QTY | PART # | DESCRIPTION |
| 1 | 2 | 110001 | BOLT, 1/2-13 X 1.25, WIZ FLANGE |
| 2 | 2 | 110440 | BOLT, 3/8-16 X 1, WIZ FLANGE |
| 3 | 2 | 110618 | NUT, 3/8-16 LOCK NYLON INSERT |
| 4 | 2 | 110658 | WASHER, 1/2" FLAT STANDARD |
| 5 | 2 | 110676 | WASHER, 3/8" FLAT STANDARD |
| 6 | 2 | 111034 | NUT, 1/2-13 LOCK NYLON |
| 7 | 1 | 211741 | SWING LIGHT MOUNT, LEFT |
| 8 | 1 | 211742 | SWING LIGHT MOUNT, RIGHT |
| 9 | 1 | 211743 | SWING LIGHT ARM, LEFT |
| 10 | 1 | 211744 | SWING LIGHT ARM, RIGHT |
| 11 | 2 | 211745 | LIGHT MOUNT |
| 12 | 2 | 211746 | FRICTION MOUNTING PLATE |
| 13 | 2 | 211747 | FRICTION WASHER 1.5" |
| 14 | 2 | 211748 | SWING LIGHT, RUBBER SEAL |
| 15 | 2 | 211749 | SWINGLIGHT EDGE TRIM |
| 16 | 2 | 230146 | GROMMET, 3/16 ID X 9/16 OD |
| 17 | 8 | 710586 | SCREW, 1/4 X 1 TEK SELF-TAP |
| 18 | 1 | 830031 | WORK LIGHT, LEFT |
| 19 | 1 | 830035 | WORK LIGHT, RIGHT |
| | | | NOT SHOWN |
| | 20' | 130004 | WIRE, 14GA BLACK |
| | 2 | 130023 | TERMINAL, RING, 14-16GA 3/8" |
| | 1 | 132027 | Switch, Spst, Toggle .250 Tab |
| | 1 | 132035 | Boot, 1/2 Toogle Switch Seal |
| | 2 | 730008 | TERMINAL, BUTT CONNECTOR, 14-16 |
| | 2 | 730010 | TERMINAL, RING, 14-16GA. 10-32 |

8/29/2013

# Flatbed Accessories
# Cargo Lights

| Cargo Light Assy, Part# 211391 | | | |
|---|---|---|---|
| ITEM | QTY | PART # | DESCRIPTION |
| 1 | 1 | 211389 | LIGHT BRACKET, RIGHT |
| 2 | 1 | 211390 | LIGHT BRACKET, LEFT |
| 3 | 1 | 230146 | GROMMET, 3/16 ID X 9/16 OD |
| 4 | 4 | 710587 | SCREW, 3/16 X .75 TEK SELF-TAP |
| 5 | 1 | 830031 | WORK LIGHT, LEFT |
| 6 | 1 | 830035 | WORK LIGHT, RIGHT |
| NOT SHOWN | | | |
| | 20 | 130004 | Wire, 14ga, Black |
| | 1 | 130010 | Terminal, Scotch Lock |
| | 1 | 132027 | Switch, Spst, Toggle .250 Tab |
| | 1 | 132035 | Boot, 1/2 Toogle Switch Seal |
| | 3 | 530071 | Terminal, Ring, 10-12 Ga, 5/16 |
| | 3 | 730008 | Terminal, Butt Connector,14-16 |
| | 2 | 730010 | Terminal, Ring, 14-16ga, 10-32 |

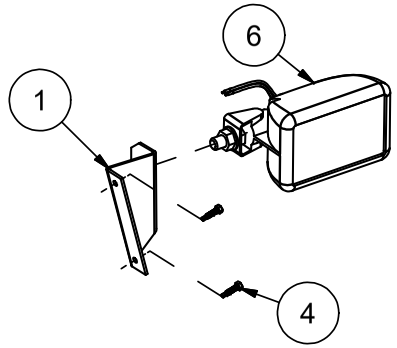


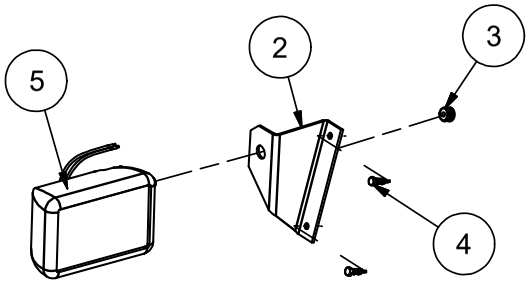

8/29/2013

# Flatbed Accessories
# Swingout Lights
# LED

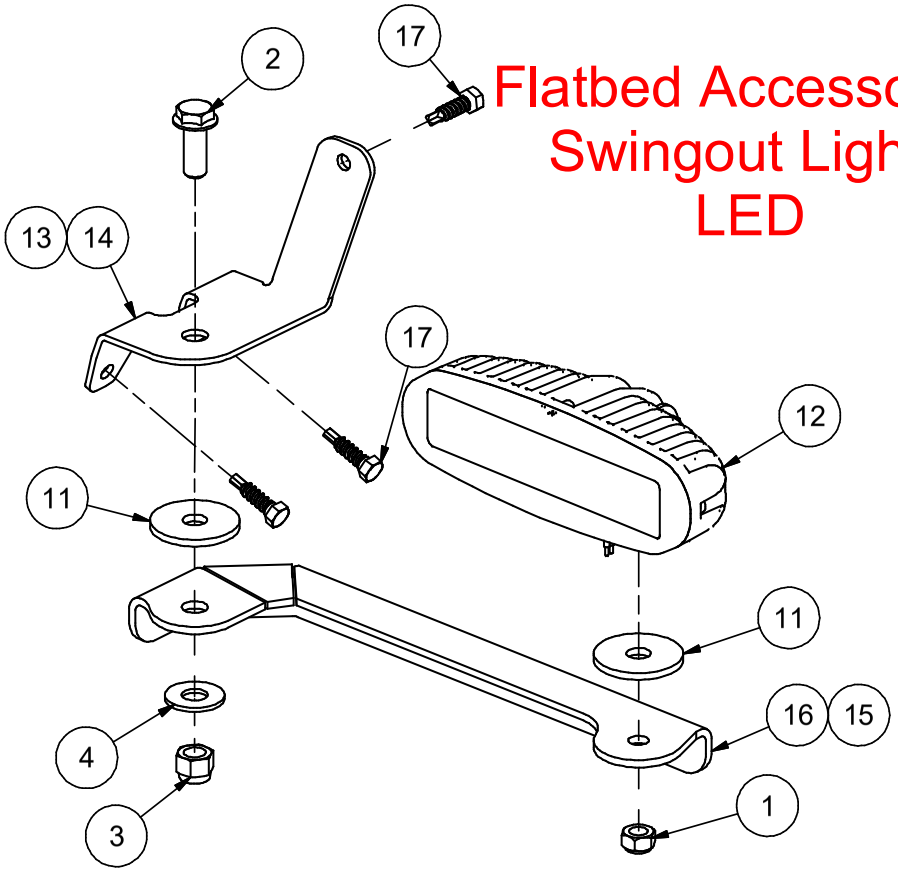


| Swingout Light Kit, Part# 205114 | | | |
|---|---|---|---|
| ITEM | QTY | PART # | DESCRIPTION |
| 1 | 2 | 110230 | NUT, M8 X 1.25, LOCK NYLON |
| 2 | 2 | 110440 | BOLT, 3/8-16 X 1, WIZ FLANGE |
| 3 | 2 | 110618 | NUT, 3/8-16 LOCK NYLON INSERT |
| 4 | 2 | 110676 | WASHER, 3/8" FLAT STANDARD |
| 5 | 5 ft | 130004 | Wire, 14ga Black |
| 6 | 1 | 132035 | SWITCH BOOT |
| 7 | 1 | 132135 | Switch, Toggle, SPST, On-Off |
| 8 | 3 | 132147 | Terminal, Butt Connector, 16-14, Heat Shrink |
| 9 | 2 | 132148 | Terminal, Ring, 16-14, 1/4", Heat Shrink |
| 10 | 1 | 132149 | Terminal, Multi-Wire Butt Connector, Heat Shrink |
| 11 | 4 | 211747 | FRICTION WASHER 1.5" |
| 12 | 2 | 232139 | Light, LED, 5" Rect, Flood, W/Connector |
| 13 | 1 | 260622 | Bracket, Swing Light, Base, Right |
| 14 | 1 | 260623 | Bracket, Swing Light, Base, Left |
| 15 | 1 | 260624 | Bracket, Swing Light, Arm, Right |
| 16 | 1 | 260625 | Bracket, Swing Light, Arm, Left |
| 17 | 6 | 710586 | SCREW, 1/4 X 1 TEK SELF-TAP |

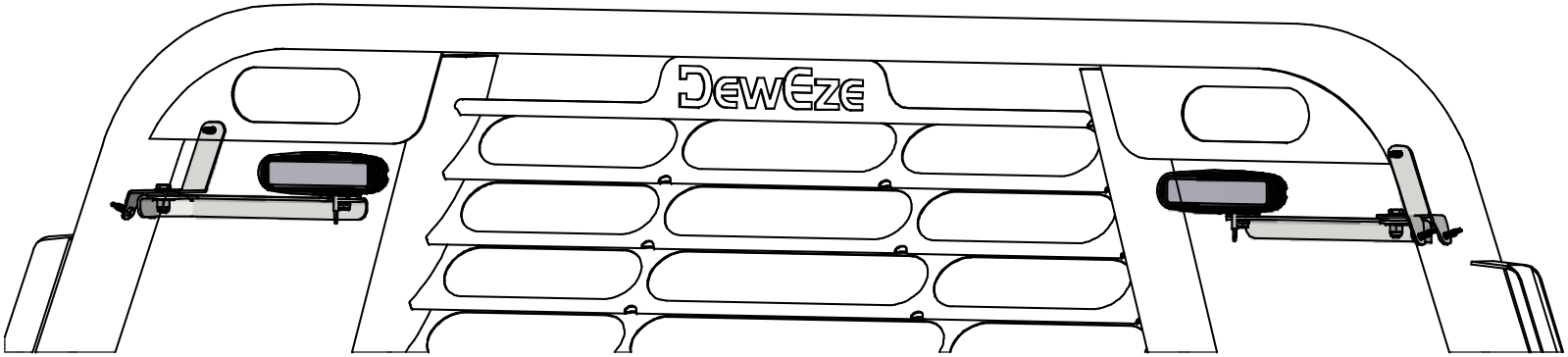


12/14/2018

# Flatbed Accessories
# Cargo Lights
# LED

| Cargo Light Kit, Part# 205113 | | | |
|---|---|---|---|
| ITEM | QTY | PART # | DESCRIPTION |
| 1 | 5 ft | 130004 | Wire, 14ga Black |
| 2 | 1 | 132035 | SWITCH BOOT |
| 3 | 1 | 132135 | Switch, Toggle, SPST, On-Off |
| 4 | 3 | 132147 | Terminal, Butt Connector, 16-14, Heat Shrink |
| 5 | 2 | 132148 | Terminal, Ring, 16-14, 1/4", Heat Shrink |
| 6 | 1 | 132149 | Terminal, Multi-Wire Butt Connector, Heat Shrink |
| 7 | 2 | 232139 | Light, LED, 5" Rect, Flood, W/Connector |
| 8 | 2 | 260626 | Bracket, Cargo Light |
| 9 | 4 | 710586 | SCREW, 1/4 X 1 TEK SELF-TAP |

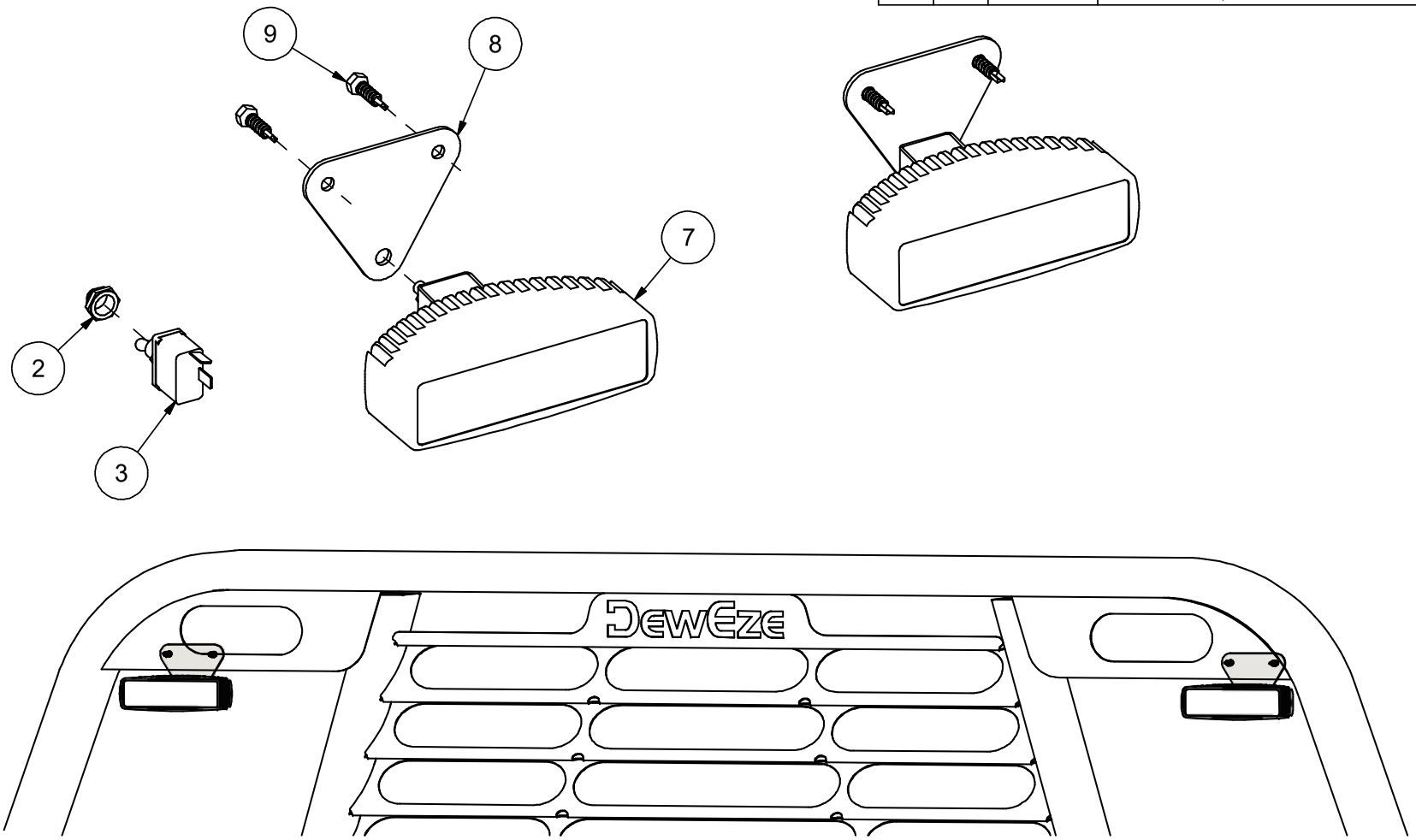


10/2/2018

# HARNESS ADAPTERS: OEM TO DEWEZE

| ITEM | | DESCRIPTION | YEAR |
|---|---|---|---|
| 232235 | FORD | Harness Adapter Ford BTO | 2023 - 2024 |
| 232235 | | Harness Adapter Ford BTO | 2020 - 2022 |
| 232119 | | Harness Adapter Ford BTO | 2017 - 2019 |
| 232118 | | Harness Adapter Ford BTO | 2011 - 2016 |
| 232046 | | Harness Adapter Ford BTO | 2000 - 2010 |
| 232192 | | Harness, Ford with BLIS (Add-on Harness) | - |
| 232047 | | Harness Adapter Ford CC | 2000 - 2024 |
| 232237 | CHEVY | Harness Adapter Chevy / GMC BTO | 2024 |
| 232181 | | Harness Adapter Chevy / GMC BTO | 2020 - 2023 |
| 232117 | | Harness Adapter Chevy / GMC CC & BTO | 2016 - 2019 |
| 232116 | | Harness Adapter Chevy / GMC CC & BTO | 2015 |
| 232050 | | Harness Adapter Chevy / GMC BTO | 2002 - 2014 |
| 232050 | | Harness Adapter Chevy / GMC CC | 2002 - 2014 |
| 232186 | | Harness Adapter Chevy / GMC CC | 2020 - 2023 |
| 232194 | DODGE | Harness Adapter Dodge / Ram BTO Incandescent | 2000 - 2023 |
| 232233 | | Harness Adapter Dodge / Ram BTO LED<br>Add (x2) to the 232194 | 2000 - 2023 |
| 232059 | | Harness Adapter Dodge / Ram CC | 2007 - 2024 |
| 232049 | | Harness Generic, Flatbed to Blunt Cut | - |
| 232079 | | LED Load Equalizer<br>(Maxxima)(PL3 Connector)(Yellow Male/Black Female) | - |
| 232143 | | LED Load Equalizer (Grote Connector)<br>(Round)(Blue Male/Blue Female) | - |

# REAR VIEW CAMERA MOUNTING KITS *

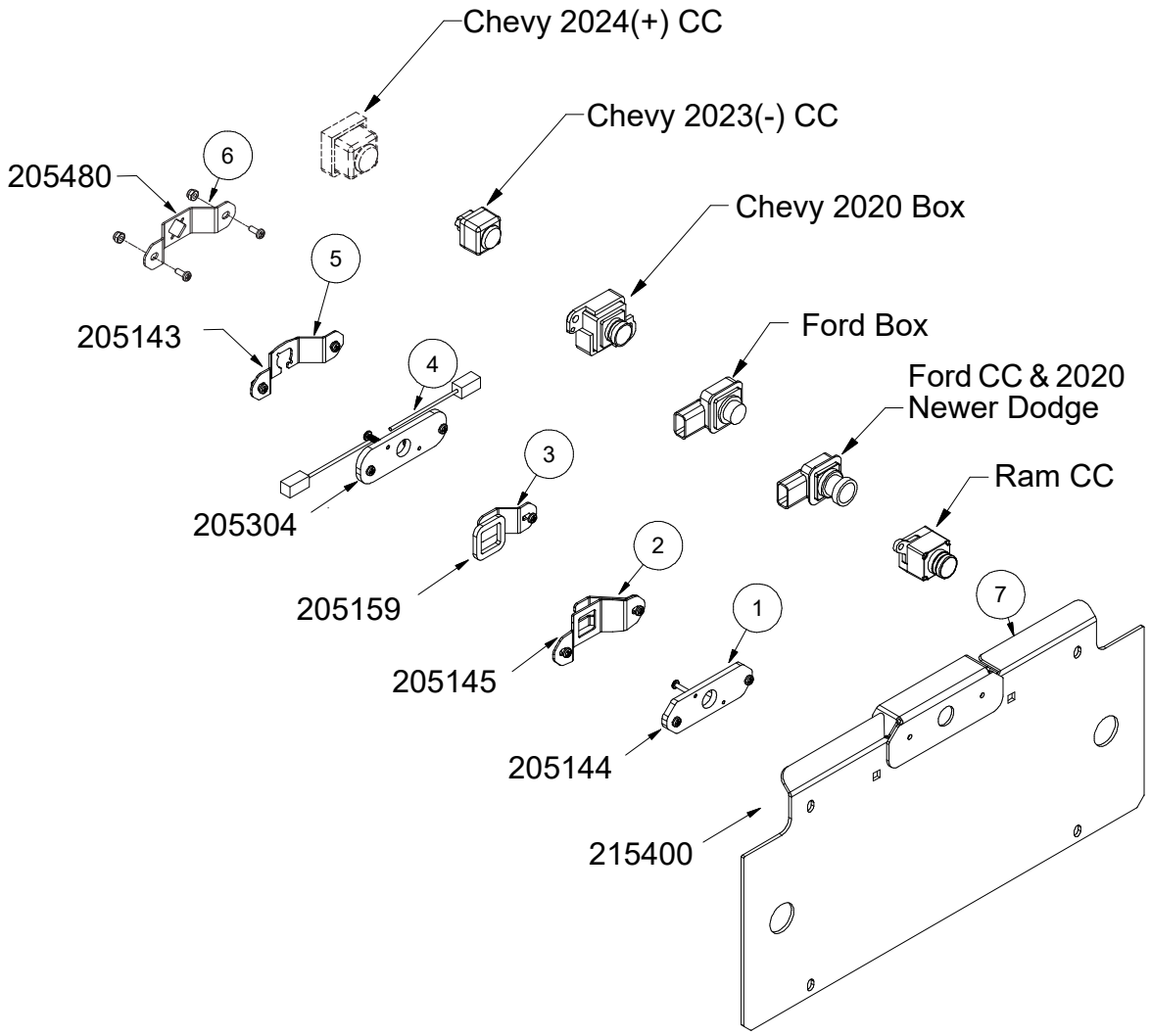


***Mount Disclaimer:** These mounting kits were designed for the most common mounting-to-camera. Manufacturers change camera styles & mountings even within the same year. Use best practices to modify if need be.

***Installer note:** DewEze does not engineer wiring nor harnesses for the camera. It is the installers' responsibility to trace the OEM cable to re-attach.

| Item | Qty | Part # | DESCRIPTION |
|---|---|---|---|
| 1 | 1 | 205144 | Dodge/Ram CC Camera Mount Kit |
| 2 | 1 | 205145 | Ford Camera & Dodge 2020+ Mount Kit |
| 3 | 1 | 205159 | Ford Box Take-Off Camera Mount Kit |
| 4 | 1 | 205304 | Chevy/ GM 2020 Box Take-Off Camera Mount Kit |
| 5 | 1 | 205143 | Chevy/GM CC 2023- Camera Mount Kit |
| 6 | 1 | 205480 | Chevy/GM CC 2024+ Camera Mount Kit |
| 7 | 1 | 215400 | Camera Mount Weldment |

# BED MOUNTING KITS *

***Installer note:** KIts were designed to match specific bed styles to a model of OEM truck. Use best practices & measurements for fitment, or choose the Yellow Bag generic kit.

| MAKE | PART # | YEAR | DESCRIPTION |
|---|---|---|---|
| FORD | 205112 | 2017+ | Ford Box Delete 671, 676, 776 |
| | 205084 | 1998-2016 | Ford Box Delete 676, 776 |
| | 205064 | 2012-2016 | Ford Box Delete 670, 770 |
| | 205036 | 1998-2011 | Ford Box Delete “Super Duty” 670, 770 |
| | 205041 | Pre-1997 | Ford Box Delete “Non Super Duty" 670 |
| | 205111 | 2017+ | Ford Cab-Chassis 679, 684, 784 |
| | 205078 | 1999-2016 | Ford Cab-Chassis 679, 684, 784 |
| | 205149 | 2017+ | Ford Cab-Chassis 688, 788 |
| | 205080 | 1999-2016 | Ford Cab-Chassis 688, 788 |
| | | | |
| CHEVY/ GM | 205303 | 2020+ | Chevrolet Box Delete, 671, 676, 776 |
| | 205063 | 2011-2019 | Chevrolet Box Delete 670 |
| | 205038 | 2000-2010 | Chevrolet Box Delete 670 |
| | 205085 | 2011-2019 | Chevrolet Box Delete 676, 776 |
| | 205086 | 2000-2010 | Chevrolet Box Delete 676, 776 |
| | 205047 | 2011+ | Chevrolet Cab-Chassis 684, 784 |
| | 205051 | 2000-2010 | Chevrolet Cab-Chassis 684, 784 |
| | 205281 | 2019+ | Chevrolet (4500-5500) Cab-Chassis 684, 784 |
| | 205069 | 2011+ | Chevrolet Cab-Chassis 688, 788 |
| | 205424 | 2019+ | Chevrolet (4500-5500) Cab-Chassis 688, 788 |
| | | | |
| DODGE/ RAM | 205185 | 2019+ | Dodge Box Delete 670, 770 |
| | 205093 | 2014-2018 | Dodge Box Delete 670, 770 |
| | 205469 | 2003-2013 | Dodge Box Delete 670, 770 |
| | 205054 | 1994-2002 | Dodge Box Delete 670, 770 |
| | 205173 | 2019+ | Dodge (3500) Box Delete 676, 776 |
| | 205121 | 2014-2018 | Dodge (3500) Box Delete 676, 776 |
| | 205087 | 2014+ | Dodge (2500) Box Delete 676, 776 |
| | 205082 | 2003-2013 | Dodge Box Delete 676, 776 |
| | 205089 | 1994-2002 | Dodge Box Delete 676, 776 |
| | 205039 | 2007+ | Dodge Cab-Chassis 679, 684, 784 |
| | 205065 | 2007+ | Dodge Cab-Chassis 688, 788 |
| MISC. | 205029 | Yellow Bag & Contents (applicable to older truck models not listed above) | |

# Flatbed Accessories
# 30" Toolbox
# Fender Skirts

| Toolbox Complete W/Step, Part# 205011 | | | |
|---|---|---|---|
| ITEM | QTY | PART # | DESCRIPTION |
| 1 | 1 | 211109 | STEP, TOOLBOX |
| 2 | .7 ft | 100449 | Traction Pad |
| 3 | 1 | 202001 | DECAL, CHIP GUARD |
| 4 | 1 | 211684 | SHIELD, TOP & SIDE |
| 5 | 1 | 205012 | BOLT PACKAGE |
| | 10 | 110258 | NUT, 5/16-18, CAGE TINNERMAN |
| | 12 | 110444 | BOLT, 5/16-18 X 0.75, WIZ FLANGE |
| | 4 | 110437 | BOLT, 3/8-16 X 0.75, WIZ FLANGE |
| | 4 | 110645 | NUT, 3/8-16 WIZ FLANGE |
| | 4 | 110676 | WASHER, 3/8" FLAT STANDARD |
| | 2 | 110606 | NUT, 5/16-18 WIZ FLANGE |
| | 4 | 110665 | WASHER, 5/16" FLAT STANDARD |
| | 8 | 110049 | WASHER, 5/16" X 1 1/2 FENDER |

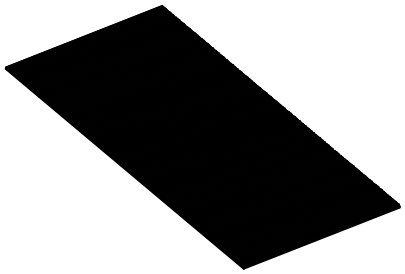

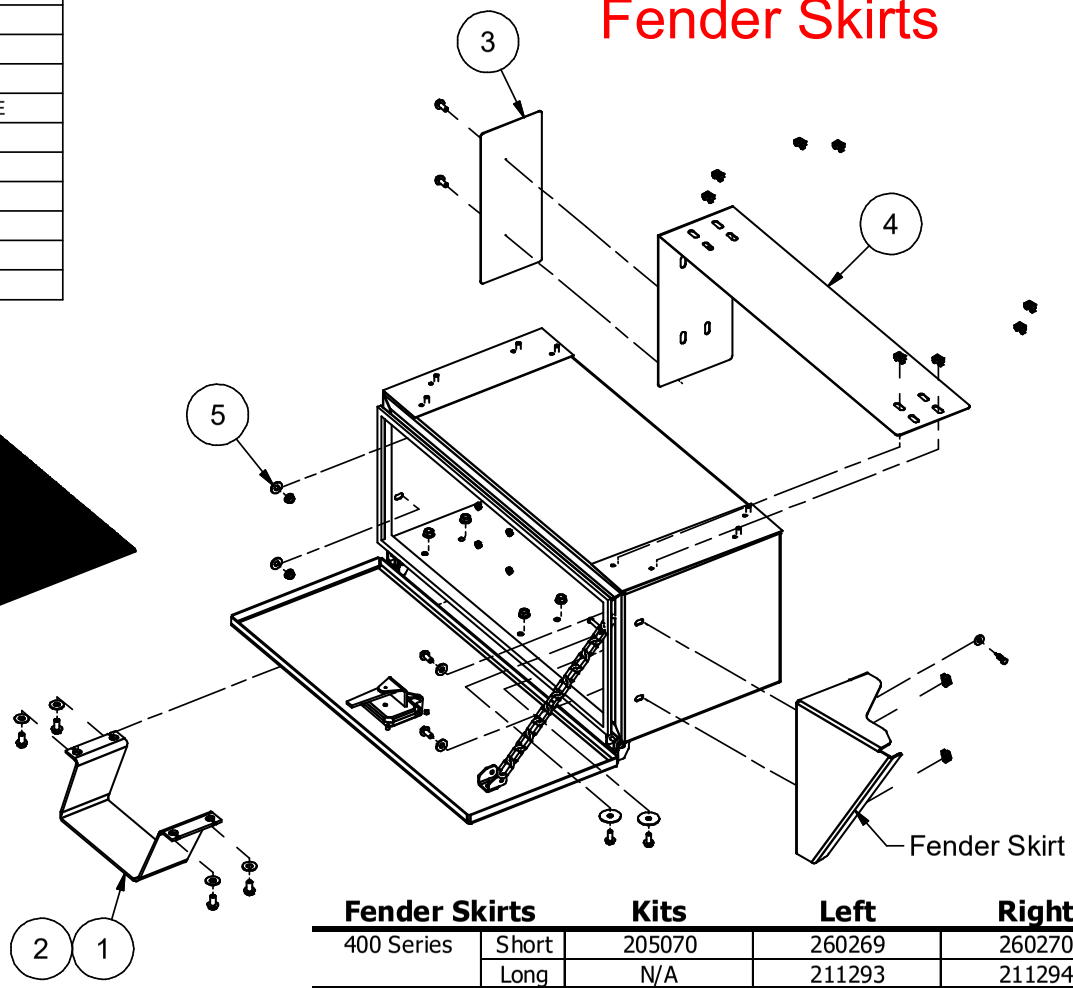


| Service Parts for Toolbox | | |
|---|---|---|
| QTY | PART # | DESCRIPTION |
| 4 | 110174 | NUT, 1/4-20 LOCK 2-WAY |
| 3 | 112011 | PUSH NUT, WASHER CAP STYLE |
| 3 | 112095 | CLEVIS PIN, STD ZP 1/4 X 1 5/8 |
| 1 | 202010 | SEAL, TOOLBOX LID (TRIM-LOK X-2897) |
| 1 | 211119 | TOOL BOX MAT |
| 2 | 212003 | Gasket, Toolbox Mount use DK111 Foam |
| 1 | 212017 | Latch, Toolbox w/Studs, Key & Gasket |
| 1 | 212015 | Gasket, Toolbox Latch |
| 1 | 212016 | Key, Toolbox Latch |
| 1 | 205014 | Door, Toolbox, Service Part |

| Fender Skirts | | Kits | Left | Right |
|---|---|---|---|---|
| 400 Series | Short | 205070 | 260269 | 260270 |
| | Long | N/A | 211293 | 211294 |
| 500 Series | Short | 205071 | 260271 | 260272 |
| | Long | N/A | 211587 | 211588 |
| 600 Series | Short | 205070 | 260269 | 260270 |
| | Long | 205072 | 260273 | 260274 |
| 700 Series | Short | 205071 | 260271 | 260272 |
| | Long | 205073 | 260275 | 260276 |

7/19/2023

| 20" TOOLBOX W/STEP 205030 | | | |
|---|---|---|---|
| ITEM | QTY | PART # | DESCRIPTION |
| 1 | 1 | 100449 | Traction Pad |
| 2 | 4 | 110174 | Nut, 1/4-20 Lock 2-Way |
| 3 | 1 | 205012 | Bolt Package |
| 3.1 | 8 | 110049 | Washer, 5/16 X 1.50 Fender |
| 3.2 | 12 | 110258 | Nut, 5/16-18, Cage Tinnerman |
| 3.3 | 4 | 110437 | Bolt, 3/8-16 X 0.75, Wiz Flange |
| 3.4 | 14 | 110444 | Bolt, 5/16-18 X 0.75, Wiz Flange |
| 3.5 | 2 | 110606 | Nut, 5/16-18 Wiz Flange |
| 3.6 | 4 | 110645 | Nut, 3/8-16 Wiz Flange |
| 3.7 | 4 | 110665 | Washer, 5/16" Flat Standard |
| 3.8 | 4 | 110676 | Washer, 3/8" Flat Standard |
| 4 | 1 | 202001 | Decal, Chip Guard |
| 5 | 1 | 205489 | Toolbox Lid 20" |
| 5.1 | 3 | 112011 | Push Nut, Washer Cap Style |
| 5.2 | 3 | 112095 | Clevis Pin, Std Zp 1/4 X 1 5/8 |
| 5.3 | 1 | 202010 | Seal, Toolbox Lid (Trim-Lok X-2897) |
| 5.4 | 1 | 215133 | Toolbox Door & Hinge Weldment 20" |
| 5.5 | 2 | 270139 | Toolbox Door Hinge, Inner Half |
| 6 | 1 | 211109 | Step, Toolbox |
| 7 | 1 | 211248 | Toolbox Mat 20" |
| 8 | 1 | 211593 | Toolbox Chip Guard 20" |
| 9 | 2 | 212003 | Gasket, Toolbox Mount |
| 10 | 1 | 212017 | Latch, Toolbox W/Studs, Key & Gasket |
| 10.1 | 1 | 212015 | Gasket, Toolbox Latch |
| 11 | 1 | 215131 | Toolbox & Hinge Weldment 20" |

# Flatbed Accessories
# 20" Toolbox

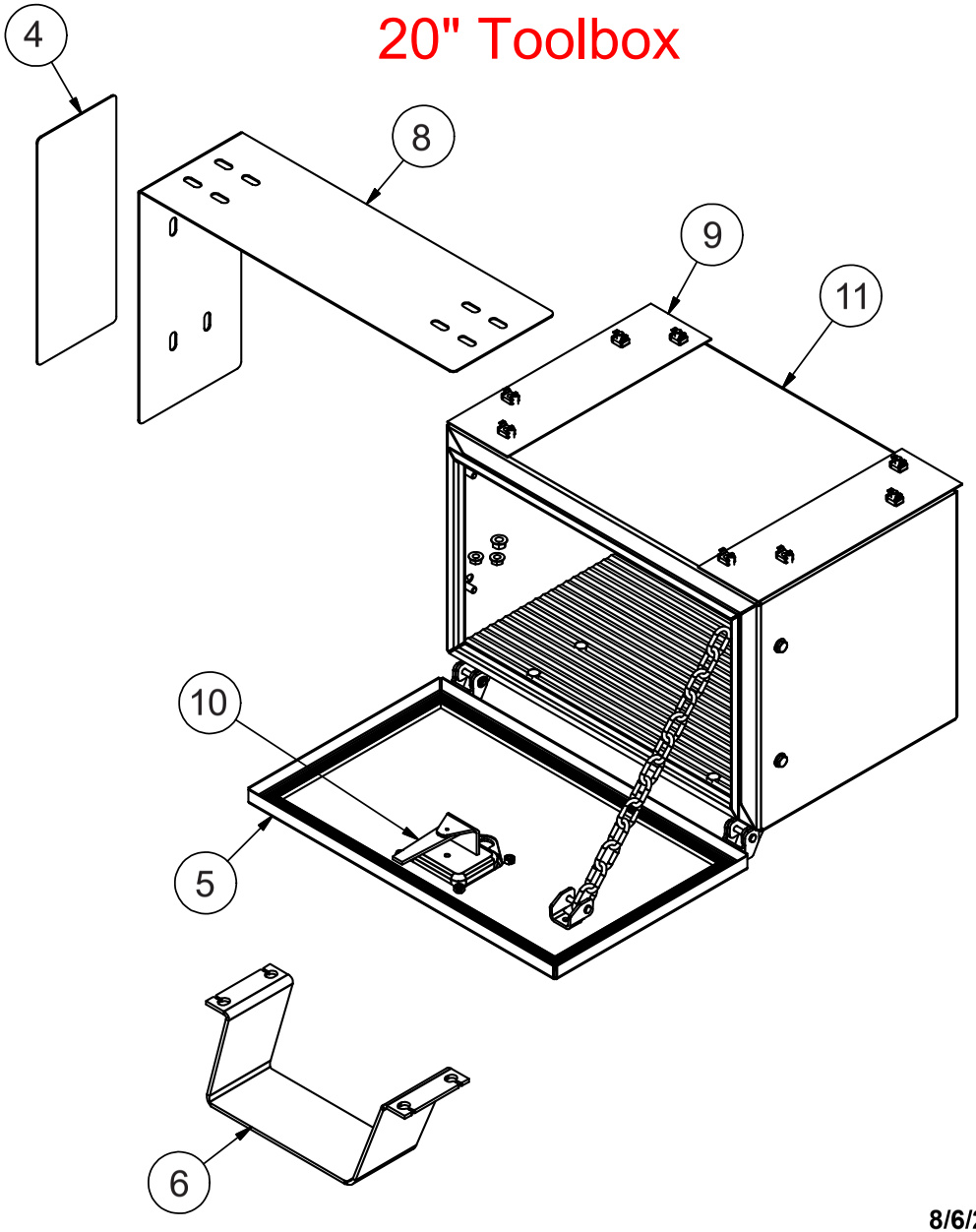


8/6/2025

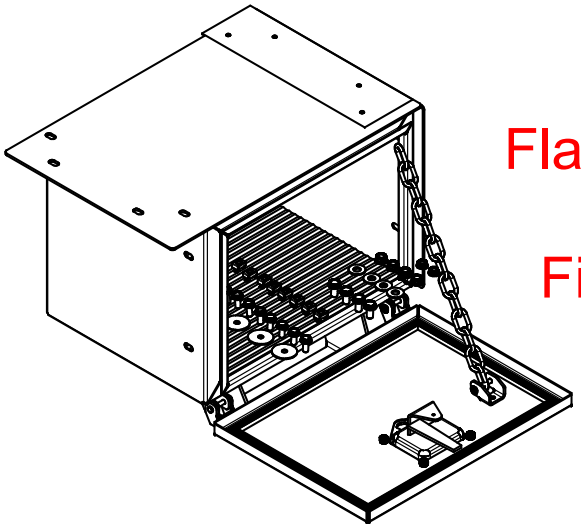

# Flatbed Accessories
# 17" Toolbox
# Fits 20" Mounting

| Toolbox Complete W/Step, 17" Right (205138) | | | |
|---|---|---|---|
| ITEM | QTY | PART # | DESCRIPTION |
| 1 | 4 | 110174 | NUT, 1/4-20 LOCK 2-WAY |
| 2 | 3 | 112011 | PUSH NUT, WASHER CAP STYLE |
| 3 | 3 | 112095 | CLEVIS PIN, STD ZP 1/4 X 1 5/8 |
| 4 | 1 | 202001 | DECAL, CHIP GUARD |
| 5 | 1 | 202010 | SEAL, TOOLBOX LID (TRIM-LOK X-2897) |
| 6 | 1 | 205012 | BOLT PACKAGE |
| | 8 | 110049 | WASHER, 5/16 X 1.50 FENDER |
| | 12 | 110258 | NUT, 5/16-18, CAGE TINNERMAN |
| | 4 | 110437 | BOLT, 3/8-16 X 0.75, WIZ FLANGE |
| | 14 | 110444 | BOLT, 5/16-18 X 0.75, WIZ FLANGE |
| | 2 | 110606 | NUT, 5/16-18 WIZ FLANGE |
| | 4 | 110645 | NUT, 3/8-16 WIZ FLANGE |
| | 4 | 110665 | WASHER, 5/16" FLAT STANDARD |
| | 4 | 110676 | WASHER, 3/8" FLAT STANDARD |
| 7 | 1 | 211109 | STEP, TOOLBOX |
| | .7 ft | 100449 | Traction Pad |
| 8 | 1 | 212003 | GASKET, TOOLBOX MOUNT |
| 9 | 1 | 212017 | Latch, Toolbox w/Studs, Key & Gasket |
| | 1 | 212015 | Gasket, Toolbox Latch |
| 10 | 1 | 215213 | WELDMENT, TOOLBOX DOOR & HINGE, 17" |
| 11 | 1 | 215394 | Weldment, 17" Right, Toolbox & Hinge |
| 12 | 1 | 260719 | Toolbox Mat, 17" |

| Toolbox Complete W/Step, 17" Left (205139) | | | |
|---|---|---|---|
| ITEM | QTY | PART # | DESCRIPTION |
| 1 | 4 | 110174 | NUT, 1/4-20 LOCK 2-WAY |
| 2 | 3 | 112011 | PUSH NUT, WASHER CAP STYLE |
| 3 | 3 | 112095 | CLEVIS PIN, STD ZP 1/4 X 1 5/8 |
| 4 | 1 | 202001 | DECAL, CHIP GUARD |
| 5 | 1 | 202010 | SEAL, TOOLBOX LID (TRIM-LOK X-2897) |
| 6 | 1 | 205012 | BOLT PACKAGE |
| | 8 | 110049 | WASHER, 5/16 X 1.50 FENDER |
| | 12 | 110258 | NUT, 5/16-18, CAGE TINNERMAN |
| | 4 | 110437 | BOLT, 3/8-16 X 0.75, WIZ FLANGE |
| | 14 | 110444 | BOLT, 5/16-18 X 0.75, WIZ FLANGE |
| | 2 | 110606 | NUT, 5/16-18 WIZ FLANGE |
| | 4 | 110645 | NUT, 3/8-16 WIZ FLANGE |
| | 4 | 110665 | WASHER, 5/16" FLAT STANDARD |
| | 4 | 110676 | WASHER, 3/8" FLAT STANDARD |
| 7 | 1 | 211109 | STEP, TOOLBOX |
| | .7 ft | 100449 | Traction Pad |
| 8 | 1 | 212003 | GASKET, TOOLBOX MOUNT |
| 9 | 1 | 212017 | Latch, Toolbox w/Studs, Key & Gasket |
| | 1 | 212015 | Gasket, Toolbox Latch |
| 10 | 1 | 215213 | WELDMENT, TOOLBOX DOOR & HINGE, 17" |
| 11 | 1 | 215393 | Weldment, 17" Left, Toolbox & Hinge |
| 12 | 1 | 260719 | Toolbox Mat, 17" |

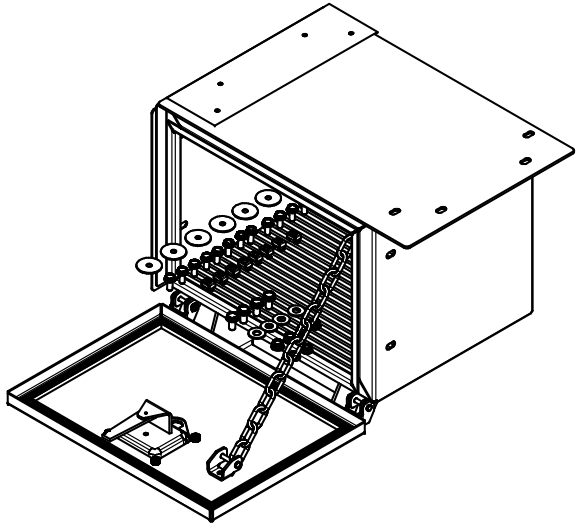

11/7/2017

# Flatbed Accessories
# 12" Toolbox
# Fits 20" Mounting

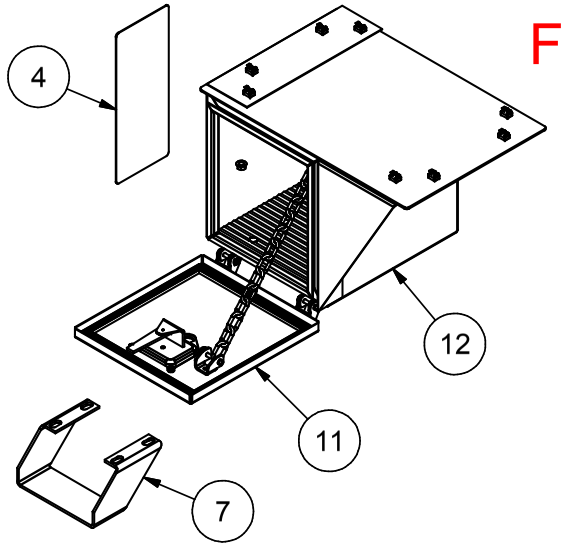


| Toolbox Complete W/Step, 12" Right (205032) | | | |
|---|---|---|---|
| ITEM | QTY | PART # | DESCRIPTION |
| 1 | 4 | 110174 | NUT, 1/4-20 LOCK 2-WAY |
| 2 | 3 | 112011 | PUSH NUT, WASHER CAP STYLE |
| 3 | 3 | 112095 | CLEVIS PIN, STD ZP 1/4 X 1 5/8 |
| 4 | 1 | 202001 | DECAL, CHIP GUARD |
| 5 | 1 | 202010 | SEAL, TOOLBOX LID (TRIM-LOK X-2897) |
| 6 | 1 | 205012 | BOLT PACKAGE |
| | 8 | 110049 | WASHER, 5/16 X 1.50 FENDER |
| | 12 | 110258 | NUT, 5/16-18, CAGE TINNERMAN |
| | 4 | 110437 | BOLT, 3/8-16 X 0.75, WIZ FLANGE |
| | 14 | 110444 | BOLT, 5/16-18 X 0.75, WIZ FLANGE |
| | 2 | 110606 | NUT, 5/16-18 WIZ FLANGE |
| | 4 | 110645 | NUT, 3/8-16 WIZ FLANGE |
| | 4 | 110665 | WASHER, 5/16" FLAT STANDARD |
| | 4 | 110676 | WASHER, 3/8" FLAT STANDARD |
| 7 | 1 | 210697 | STEP TOOL BOX |
| | .5 ft | 100449 | Traction Pad |
| 8 | 1 | 211871 | TOOLBOX MAT 12" |
| 9 | 1 | 212003 | GASKET, TOOLBOX MOUNT |
| 10 | 1 | 212017 | Latch, Toolbox w/Studs, Key & Gasket |
| | 1 | 212015 | Gasket, Toolbox Latch |
| 11 | 1 | 215136 | TOOLBOX DOOR & HINGE WELDMENT 12" |
| 12 | 1 | 215152 | WELDMENT, TOOLBOX 12" W/SKIRT, RIGHT |

| Toolbox Complete W/Step, 12" Left (205033) | | | |
|---|---|---|---|
| ITEM | QTY | PART # | DESCRIPTION |
| 1 | 4 | 110174 | NUT, 1/4-20 LOCK 2-WAY |
| 2 | 3 | 112011 | PUSH NUT, WASHER CAP STYLE |
| 3 | 3 | 112095 | CLEVIS PIN, STD ZP 1/4 X 1 5/8 |
| 4 | 1 | 202001 | DECAL, CHIP GUARD |
| 5 | 1 | 202010 | SEAL, TOOLBOX LID (TRIM-LOK X-2897) |
| 6 | 1 | 205012 | BOLT PACKAGE |
| | 8 | 110049 | WASHER, 5/16 X 1.50 FENDER |
| | 12 | 110258 | NUT, 5/16-18, CAGE TINNERMAN |
| | 4 | 110437 | BOLT, 3/8-16 X 0.75, WIZ FLANGE |
| | 14 | 110444 | BOLT, 5/16-18 X 0.75, WIZ FLANGE |
| | 2 | 110606 | NUT, 5/16-18 WIZ FLANGE |
| | 4 | 110645 | NUT, 3/8-16 WIZ FLANGE |
| | 4 | 110665 | WASHER, 5/16" FLAT STANDARD |
| | 4 | 110676 | WASHER, 3/8" FLAT STANDARD |
| 7 | 1 | 210697 | STEP TOOL BOX |
| | .5 ft | 100449 | Traction Pad |
| 8 | 1 | 211871 | TOOLBOX MAT 12" |
| 9 | 1 | 212003 | GASKET, TOOLBOX MOUNT |
| 10 | 1 | 212017 | Latch, Toolbox w/Studs, Key & Gasket |
| | 1 | 212015 | Gasket, Toolbox Latch |
| 11 | 1 | 215136 | TOOLBOX DOOR & HINGE WELDMENT 12" |
| 12 | 1 | 215151 | WELDMENT, TOOLBOX 12" W/SKIRT, LEFT |

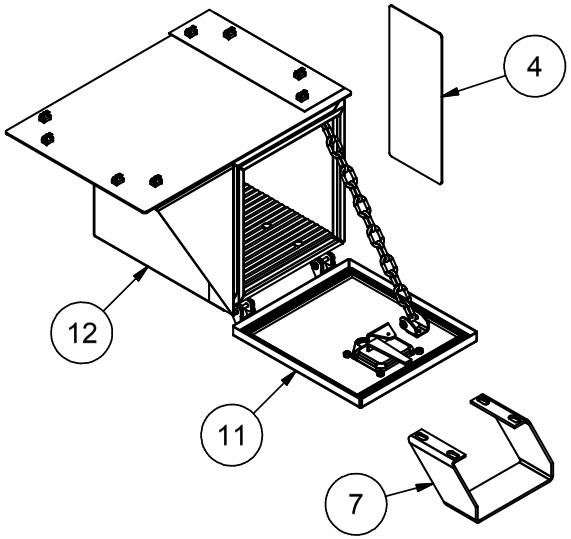


11/7/2017

# Flatbed Accessories
# 770 Toolbox
# Fits "770" only

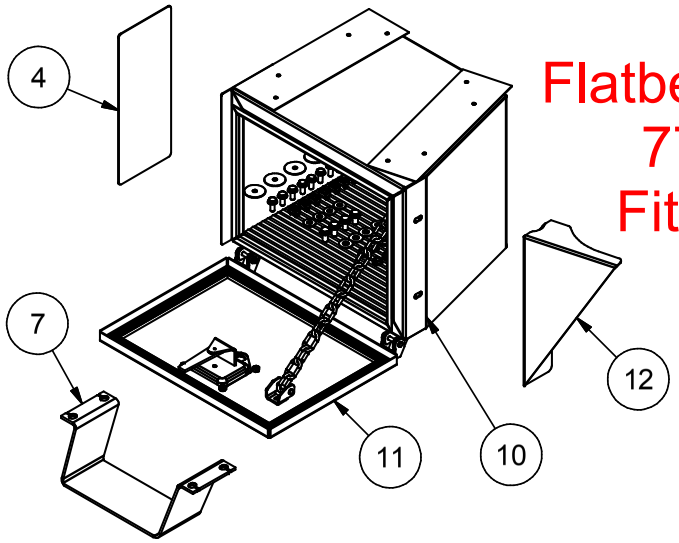


| Toolbox Complete W/Step, 770 Right (205044) | | | |
|---|---|---|---|
| ITEM | QTY | PART # | DESCRIPTION |
| 1 | 4 | 110174 | NUT, 1/4-20 LOCK 2-WAY |
| 2 | 3 | 112011 | PUSH NUT, WASHER CAP STYLE |
| 3 | 3 | 112095 | CLEVIS PIN, STD ZP 1/4 X 1 5/8 |
| 4 | 1 | 202001 | DECAL, CHIP GUARD |
| 5 | 1 | 202010 | SEAL, TOOLBOX LID (TRIM-LOK X-2897) |
| 6 | 1 | 205012 | BOLT PACKAGE |
| | 8 | 110049 | WASHER, 5/16 X 1.50 FENDER |
| | 12 | 110258 | NUT, 5/16-18, CAGE TINNERMAN |
| | 4 | 110437 | BOLT, 3/8-16 X 0.75, WIZ FLANGE |
| | 14 | 110444 | BOLT, 5/16-18 X 0.75, WIZ FLANGE |
| | 2 | 110606 | NUT, 5/16-18 WIZ FLANGE |
| | 4 | 110645 | NUT, 3/8-16 WIZ FLANGE |
| | 4 | 110665 | WASHER, 5/16" FLAT STANDARD |
| | 4 | 110676 | WASHER, 3/8" FLAT STANDARD |
| 7 | 1 | 211109 | STEP, TOOLBOX |
| | .7 ft | 100449 | Traction Pad |
| 8 | 2 | 212003 | GASKET, TOOLBOX MOUNT |
| 9 | 1 | 212017 | Latch, Toolbox w/Studs, Key & Gasket |
| | 1 | 212015 | Gasket, Toolbox Latch |
| 10 | 1 | 215211 | WELDMENT, TOOLBOX & HINGE, 770 LEFT |
| 11 | 1 | 215213 | WELDMENT, TOOLBOX DOOR & HINGE, 17" |
| 12 | 1 | 260203 | TOOLBOX SKIRT, 770, LEFT |
| 13 | 1 | 260205 | TOOLBOX MAT 770, LEFT |

| Toolbox Complete W/Step, 770 Left (205045) | | | |
|---|---|---|---|
| ITEM | QTY | PART # | DESCRIPTION |
| 1 | 4 | 110174 | NUT, 1/4-20 LOCK 2-WAY |
| 2 | 3 | 112011 | PUSH NUT, WASHER CAP STYLE |
| 3 | 3 | 112095 | CLEVIS PIN, STD ZP 1/4 X 1 5/8 |
| 4 | 1 | 202001 | DECAL, CHIP GUARD |
| 5 | 1 | 202010 | SEAL, TOOLBOX LID (TRIM-LOK X-2897) |
| 6 | 1 | 205012 | BOLT PACKAGE |
| | 8 | 110049 | WASHER, 5/16 X 1.50 FENDER |
| | 12 | 110258 | NUT, 5/16-18, CAGE TINNERMAN |
| | 4 | 110437 | BOLT, 3/8-16 X 0.75, WIZ FLANGE |
| | 14 | 110444 | BOLT, 5/16-18 X 0.75, WIZ FLANGE |
| | 2 | 110606 | NUT, 5/16-18 WIZ FLANGE |
| | 4 | 110645 | NUT, 3/8-16 WIZ FLANGE |
| | 4 | 110665 | WASHER, 5/16" FLAT STANDARD |
| | 4 | 110676 | WASHER, 3/8" FLAT STANDARD |
| 7 | 1 | 211109 | STEP, TOOLBOX |
| | .7 ft | 100449 | Traction Pad |
| 8 | 2 | 212003 | GASKET, TOOLBOX MOUNT |
| 9 | 1 | 212017 | Latch, Toolbox w/Studs, Key & Gasket |
| | 1 | 212015 | Gasket, Toolbox Latch |
| 10 | 1 | 215212 | WELDMENT, TOOLBOX & HINGE, 770 RIGHT |
| 11 | 1 | 215213 | WELDMENT, TOOLBOX DOOR & HINGE, 17" |
| 12 | 1 | 260204 | TOOLBOX SKIRT, 770, RIGHT |
| 13 | 1 | 260206 | TOOLBOX MAT 770, RIGHT |

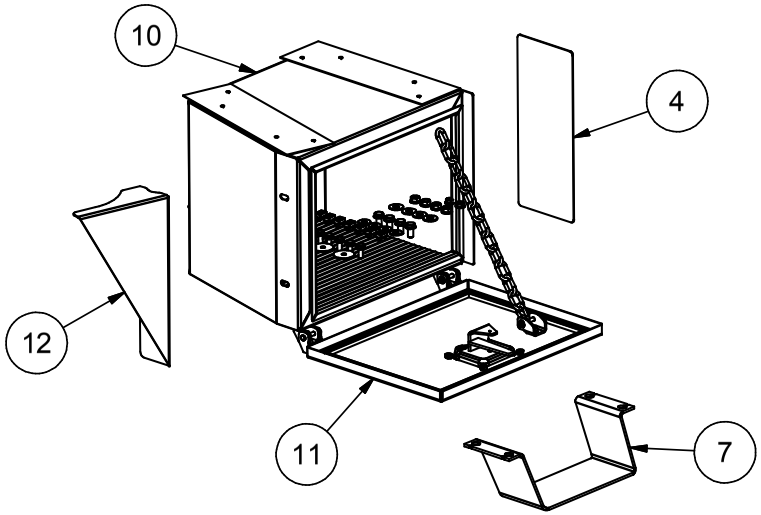


11/7/2017

# Flatbed Accessories
# Across the Bed Toolbox

| Across the Bed Toolbox, Part# 210915 | | | |
|---|---|---|---|
| ITEM | QTY | PART # | DESCRIPTION |
| 1 | 1 | 210914 | TOOLBOX WELD ASSEMBLY |
| 2 | 2 | 211132 | BUSHING, .625 X .5 X .062 FNG |
| 3 | 4 | 110618 | NUT, 3/8-16 LOCK NYLON INSERT |
| 4 | 1 | 210908 | ALL THREAD |
| 5 | 2 | 211134 | SPRING/LATCH |
| 6 | 2 | 500078 | Shock, Gas Filled |
| 7 | 1 | 400010 | DECAL, DEWEZE BLACK OUTLINE |
| 8 | 4 | 110645 | NUT, 3/8-16 WIZ FLANGE |
| 9 | 1 | 211143 | HANDLE WELD ASSY |
| 10 | 2 | 110239 | SetScrew, 5/16-18 X 0.3125 |
| 11 | 1 | 211138 | WEAR PAD, PLASTIC TOOLBOX |
| 12 | 1 | 110238 | 1/4-20 X .75 FLAT C'SUNK SCREW |
| 13 | 1 | 110667 | WASHER, 1/4" LOCK |
| 14 | 1 | 110609 | NUT, 1/4-20 |

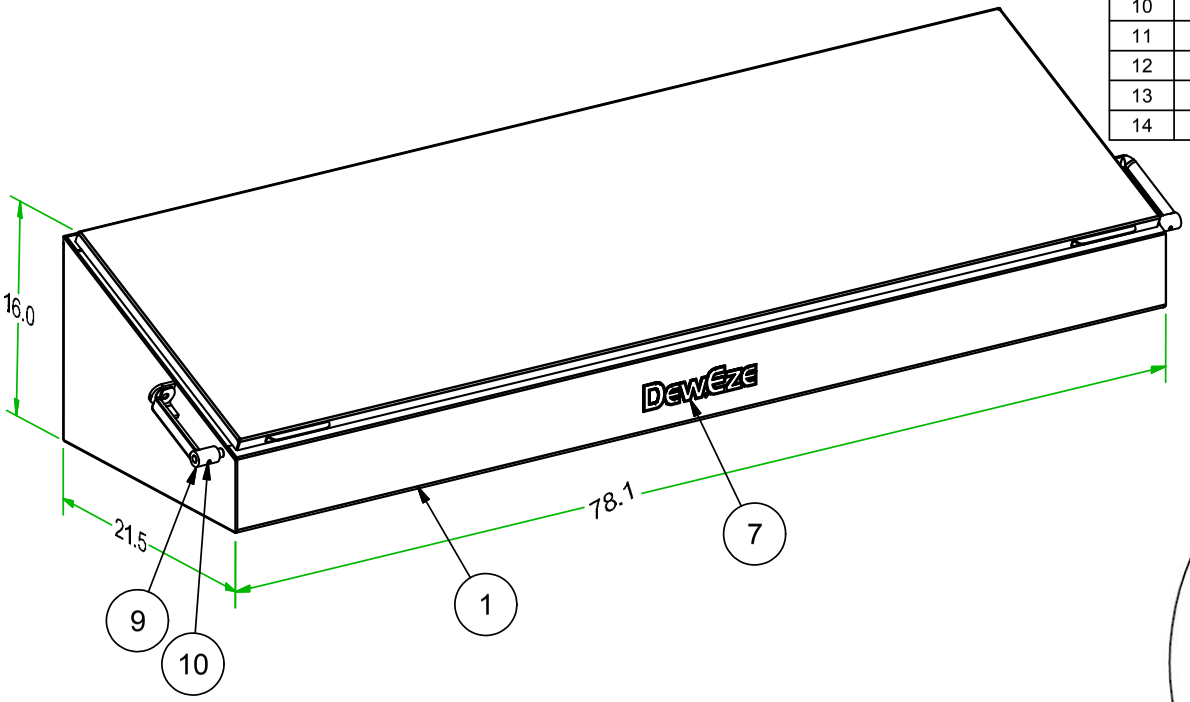


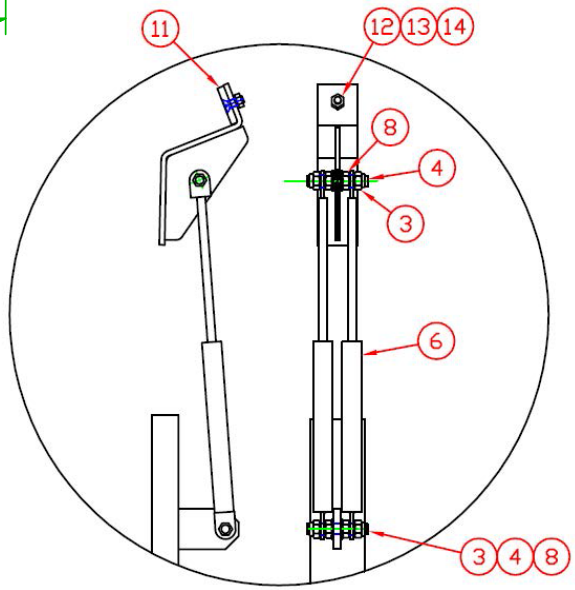


3/21/2011

# Flatbed Accessories Spinners & Risers

| Spinner Assy 16" Pair, Part# 210008 | | | |
|---|---|---|---|
| ITEM | QTY | PART # | DESCRIPTION |
| 1 | 2 | 210006 | Pin, Lynch 1/4 x 1 1/2 |
| 2 | 2 | 210007 | WELDMENT, SPINNER 16" |
| 3 | 2 | 211513 | LYNCH PIN GUARD |

| Spinner Assy 16" Pair, XRM, Part #215007 | | | |
|---|---|---|---|
| ITEM | QTY | PART # | DESCRIPTION |
| 1 | 2 | 210006 | Pin, Lynch 1/4 x 1 1/2 |
| 2 | 2 | 211509 | WELDMENT, SPINNER 16" XRM |
| 3 | 2 | 211513 | LYNCH PIN GUARD |

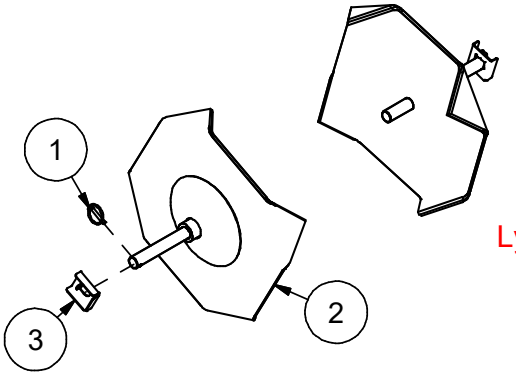


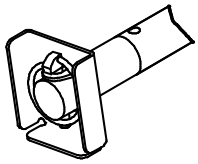

DETAIL A
Lynch Pin Guard

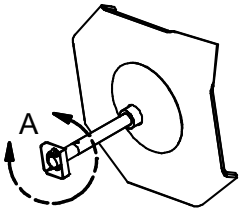


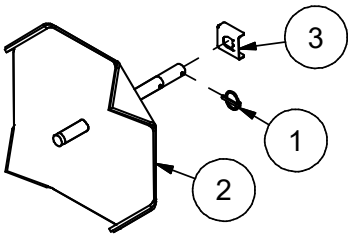


| Spinner Assy 12" Pair, Part# 215081 | | | |
|---|---|---|---|
| ITEM | QTY | PART # | DESCRIPTION |
| 1 | 2 | 210006 | Pin, Lynch 1/4 x 1 1/2 |
| 2 | 2 | 211513 | LYNCH PIN GUARD |
| 3 | 2 | 215080 | WELDMENT, SPINNER 12" |

| Spinner Assy 12" Pair, XRM, Part# 215234 | | | |
|---|---|---|---|
| ITEM | QTY | PART # | DESCRIPTION |
| 1 | 2 | 210006 | Pin, Lynch 1/4 x 1 1/2 |
| 2 | 2 | 211513 | LYNCH PIN GUARD |
| 3 | 2 | 215233 | WELDMENT, SPINNER 12" XRM |

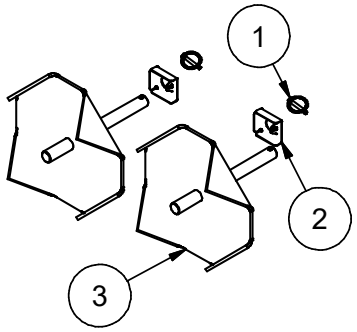


| Spinner Extension Pair, Part # 205076 | | | |
|---|---|---|---|
| ITEM | QTY | PART # | DESCRIPTION |
| 1 | 2 | 110658 | Washer, 1/2 Flat |
| 2 | 2 | 210006 | Pin, Lynch 1/4 x 1 1/2 |
| 3 | 2 | 215235 | Spinner Extension Pin |

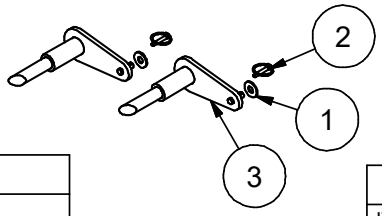


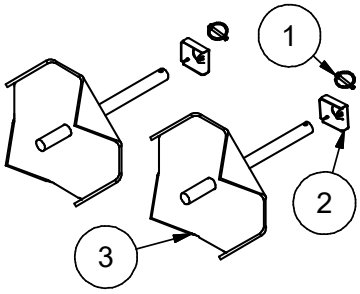


| Riser, Offset Pair, Part# 211145 | | | |
|---|---|---|---|
| ITEM | QTY | PART # | DESCRIPTION |
| 1 | 2 | 110364 | BOLT, 1-8 X 7.0 |
| 2 | 2 | 110601 | NUT, 1-8 |
| 3 | 2 | 211125 | RISER WELD ASSY |
| 4 | 2 | 510174 | GREASE ZERK, 1/4-28 ST |

| Riser, Offset XRM, Right 205350 | | | |
|---|---|---|---|
| ITEM | QTY | PART # | DESCRIPTION |
| 1 | 1 | 110364 | BOLT, 1-8 X 7.0 |
| 2 | 1 | 110601 | NUT, 1-8 |
| 3 | 1 | 211508 | RIGHT RISER WELD ASSY |
| 4 | 1 | 510174 | GREASE ZERK, 1/4-28 ST |

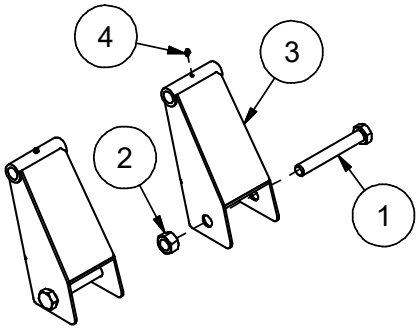


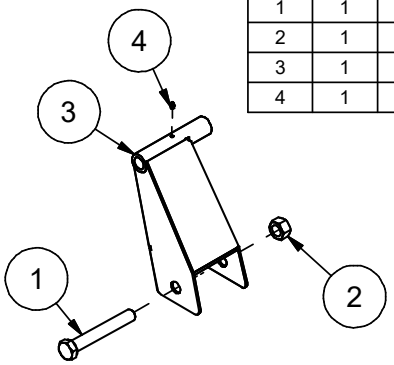


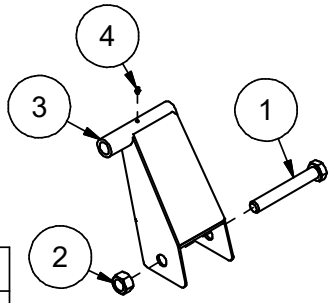


| Riser, Offset XRM, Left 205349 | | | |
|---|---|---|---|
| ITEM | QTY | PART # | DESCRIPTION |
| 1 | 1 | 110364 | BOLT, 1-8 X 7.0 |
| 2 | 1 | 110601 | NUT, 1-8 |
| 3 | 1 | 211507 | LEFT RISER WELD ASSY |
| 4 | 1 | 510174 | GREASE ZERK, 1/4-28 ST |

4/20/2020

# OTHER ACCESSORIES

| Adapter Assy, 4' Bale, Part# 210933 | | | |
|---|---|---|---|
| ITEM | QTY | PART # | DESCRIPTION |
| 1 | 2 | 210929 | 4' BALE ADAPTER |
| 2 | 2 | 210006 | Pin, Lynch 1/4 x 1 1/2 |

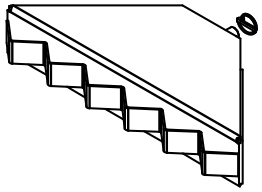

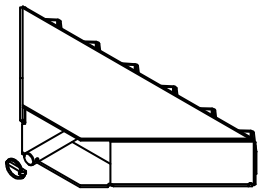

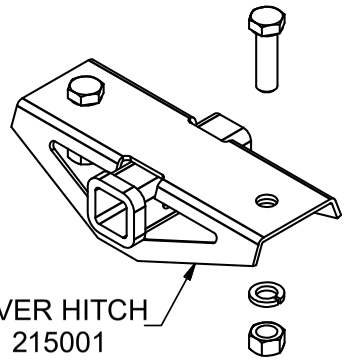


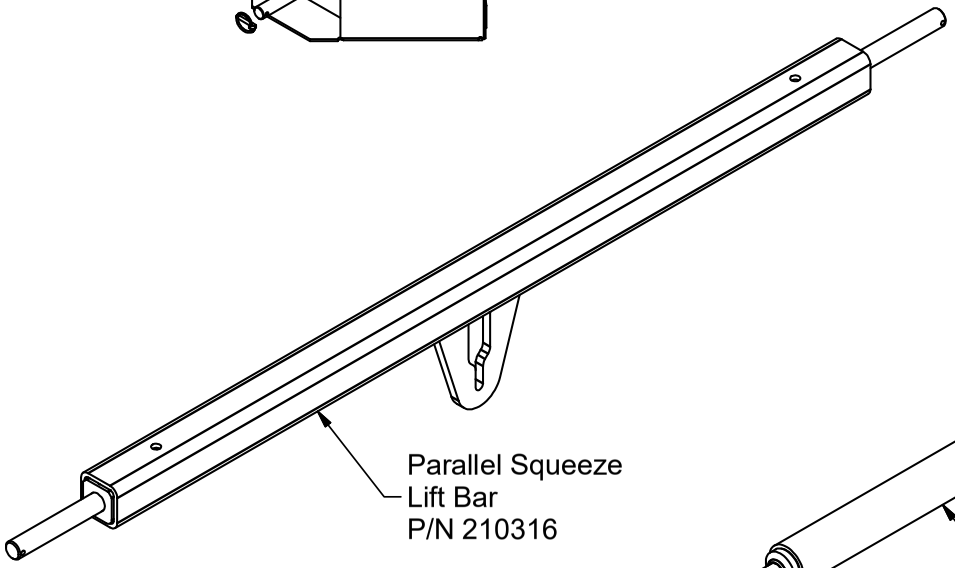


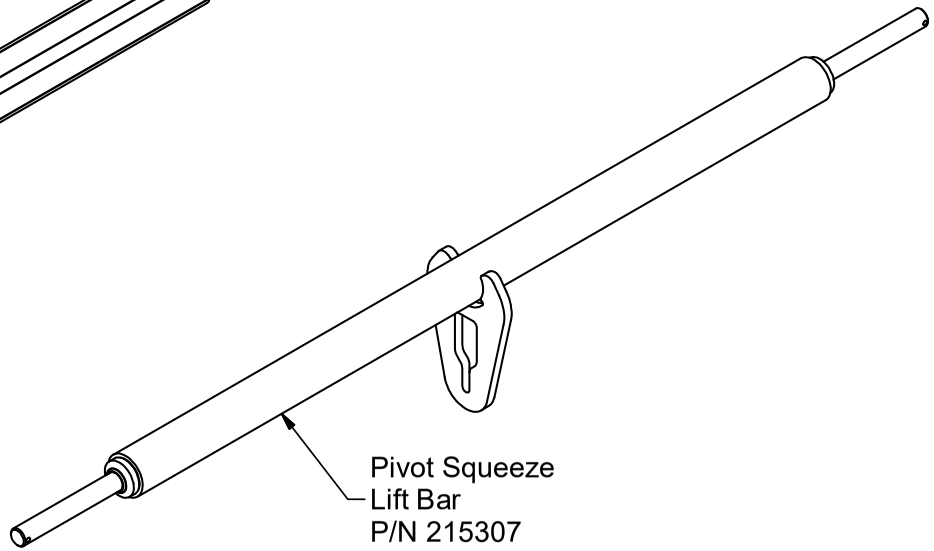


12/4/2014

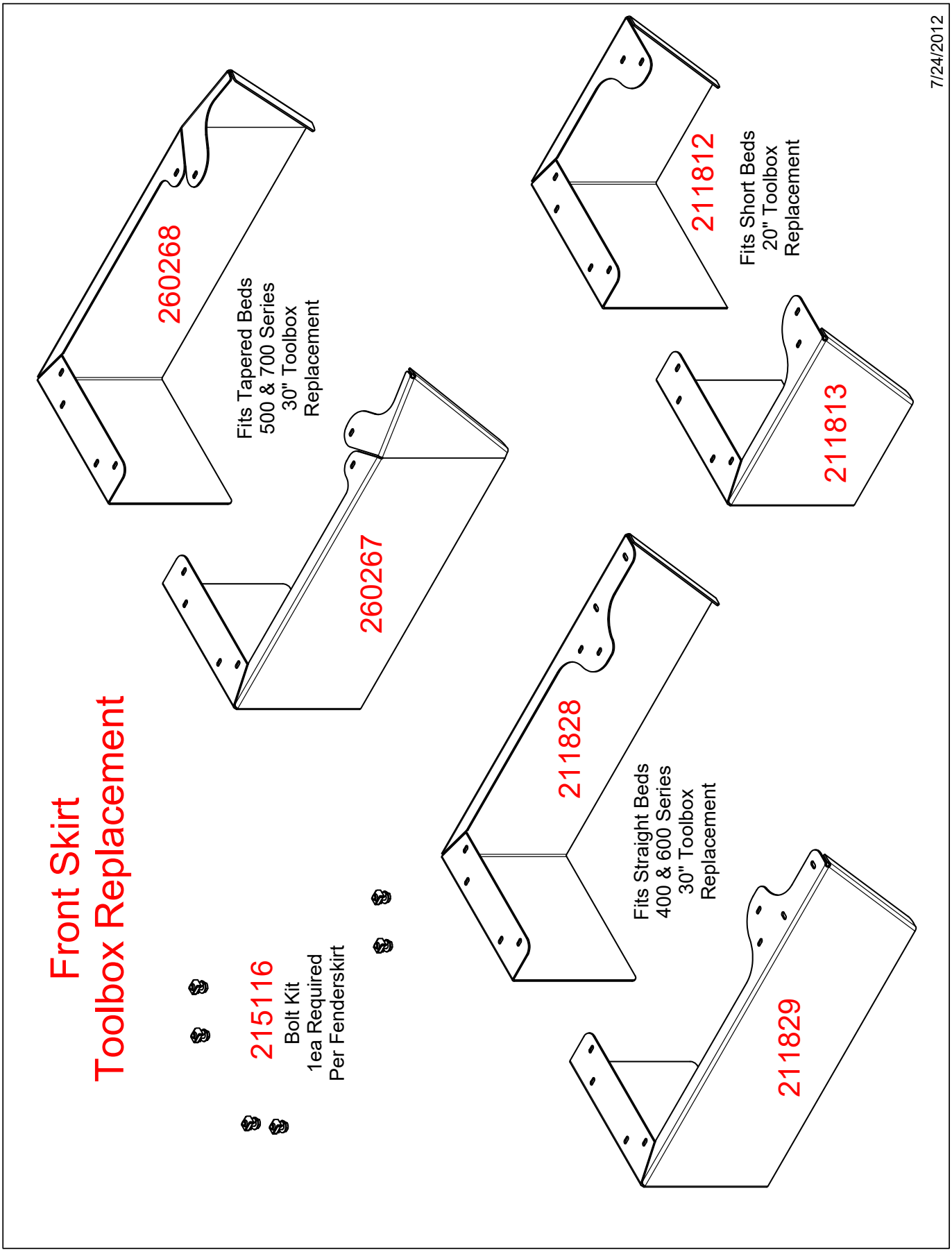
Front Skirt
Toolbox Replacement
260268
Fits Tapered Beds
500 & 700 Series
30" Toolbox
Replacement
260267
211812
Fits Short Beds
20" Toolbox
Replacement
211813
211828
Fits Straight Beds
400 & 600 Series
30" Toolbox
Replacement
211829
215116
Bolt Kit
1ea Required
Per Fenderskirt
7/24/2012

# GatorHyde Repair Instructions

## Required items:

**1 – 25 x 25 ml caulking gun (202030)**
**1 – 25 x 25 ml cartridge set of GatorHyde Repair Material (202031)**
**1 – ¼" x 6" mixing wand (202032)**
**1 – pair of rubber gloves**
**1 – wooden stick**
**1 – Instruction sheet and MSDS sheet**
**1 – MEK – methyl ethyl ketone solvent (available at most hardware stores)**
**1 – small paint brush**
**2 – plastic cups**

**SAFETY WARNING!**
**Read the Master Safety Data Sheets (MSDS) on all chemicals before handling any chemical.**
**See: http://www.msds.com**

## Note:

This repair is designed to easily fix small, damaged areas fast and with limited amount of effort. However this product is fast reacting so make sure to thoroughly read this instruction sheet before proceeding with repairs.

## Application Instruction:

**Step 1.** Before you start, put on rubber gloves and safety glasses.

**Step 2.** Place a piece of cardboard or newspaper next to the repair area prior to opening and mixing the material.

**Step 3**. Cut back damaged area with a razor knife to make a square.

**Step 4.** Sand area and feather edges with 40 grit sandpaper. Blow out sanded area to get rid of dust.

**Step 5.** Clean area well with MEK solvent and allow to dry for 30 minutes.

**Step 6.** Attach static mixing wand to 25 x 25 ml cartridge set, twist and lock in place. Insert cartridge into caulking gun.

**Step 7.** Hold the caulking gun in an upright position in one hand, then set the two plastic cups on a flat surface side by side. Next point the static mixing wand into a cup and squeeze the trigger of the gun two times so a small amount of material is discharged into the cup. (Note! This material is to be discarded.) Immediately move the static mixing wand over and point it into the next cup and continue to discharge the remaining amount of material into this cup.

**Step 8.** Allow the material to set in cup and gently stir with wooden stick for a period of 1 to 1 ½ minutes or until the GatorHyde becomes thicker and will stick to either a finger or wooden stick.

**Step 9.** Once material has begun to gel, apply enough product to finger or a stick and immediately dab onto damaged area. Use the paint brush to dab the area in a vertical manner to make a textured surface.

**Cure time.** Allow repaired area to cure for a period of 1 hour prior to heavy impact loading.

**Clean-up.** In order to clean up the area take a paper sack or plastic trash bag and place all the empty jars and remaining contents of the repair kit and dispose into a standard trash can or simply put everything back in the box and throw away.

GatorHyde Protective Coatings, Inc., 2210 South Highway 69, Wagoner, OK 74467 * (918) 485-2835 *
www.gatorhyde.com

### SYNCHRONIZING TRANSMITTER AND RECEIVER

To teach the transmitter ID code to the receiver, use the following procedure:

1. Make sure the receiver and transmitter are OFF.
2. Press and hold transmitter's button 1 and 8 (as shown) then press Power button until both LEDs start blinking, then release buttons.
3. Apply power to the receiver.
4. Wait for ~5 seconds or until the green LED on the transmitter starts blinking rapidly.
5. Teach complete.

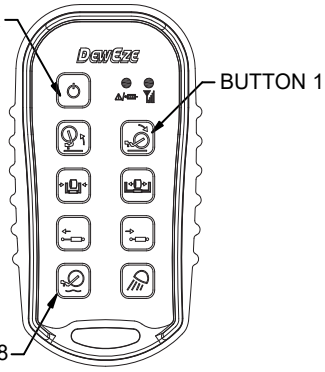


### TRANSMITTER ERROR CODE CHART

| ERROR CODE | PROBABLE CAUSE |
|---|---|
| 1 | LOW BATTERY |
| 2 | FAULTY CIRCUIT TO OUTPUT A |
| 3 | FAULTY CIRCUIT TO OUTPUT B |
| 4 | FAULTY CIRCUIT TO OUTPUT C |
| 5 | FAULTY CIRCUIT TO OUTPUT D |
| 6 | FAULTY CIRCUIT TO OUTPUT E |
| 7 | FAULTY CIRCUIT TO OUTPUT F |
| 8 | FAULTY CIRCUIT TO OUTPUT G |
| 9 | FAULTY CIRCUIT TO OUTPUTH |
| 10 | FAULTY CIRCUIT TO LIGHT OUTPUT |

**ERROR CODE IS THE NUMBER OF RED BLINKS BETWEEN EVERY PAUSE.**

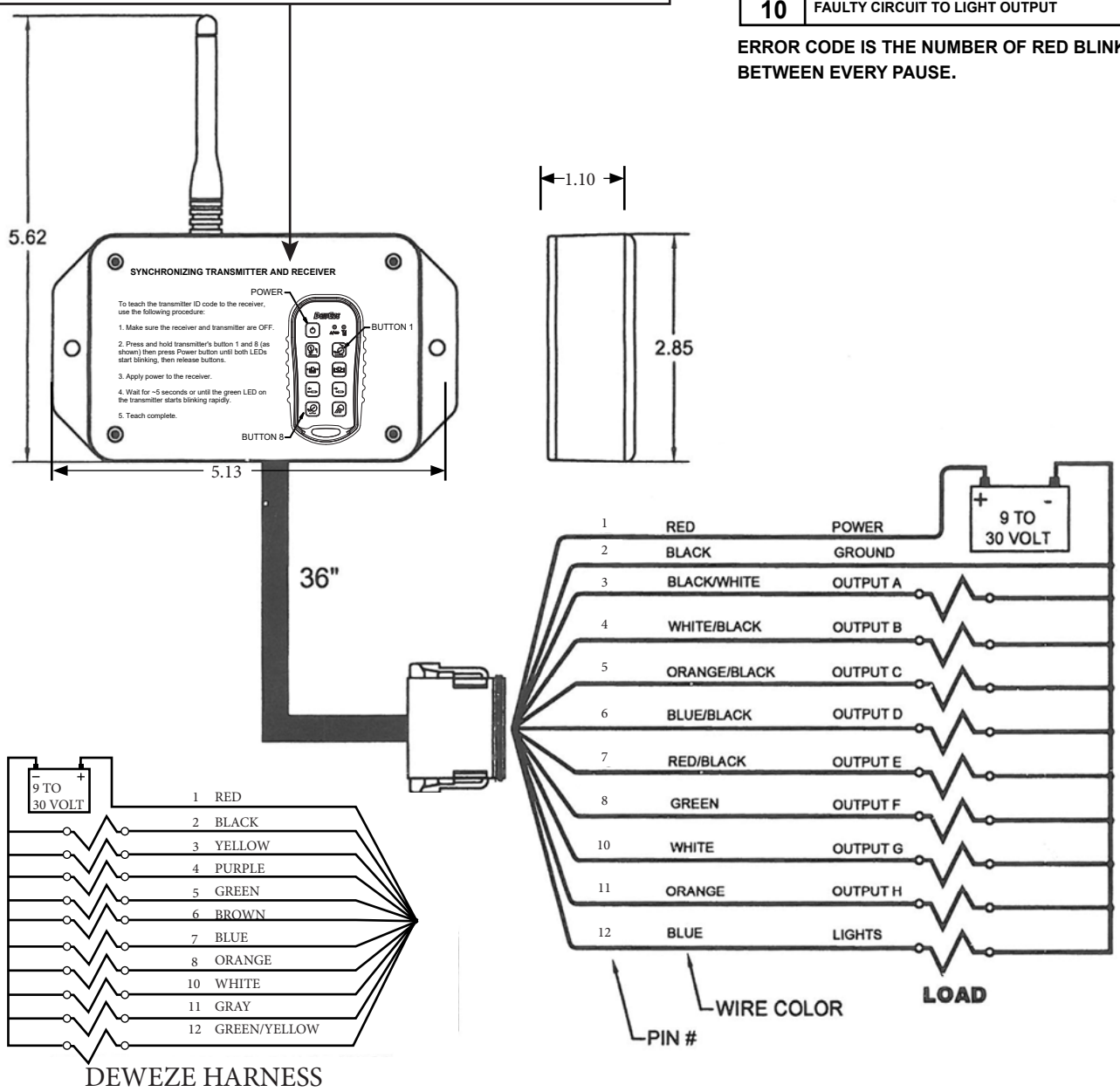

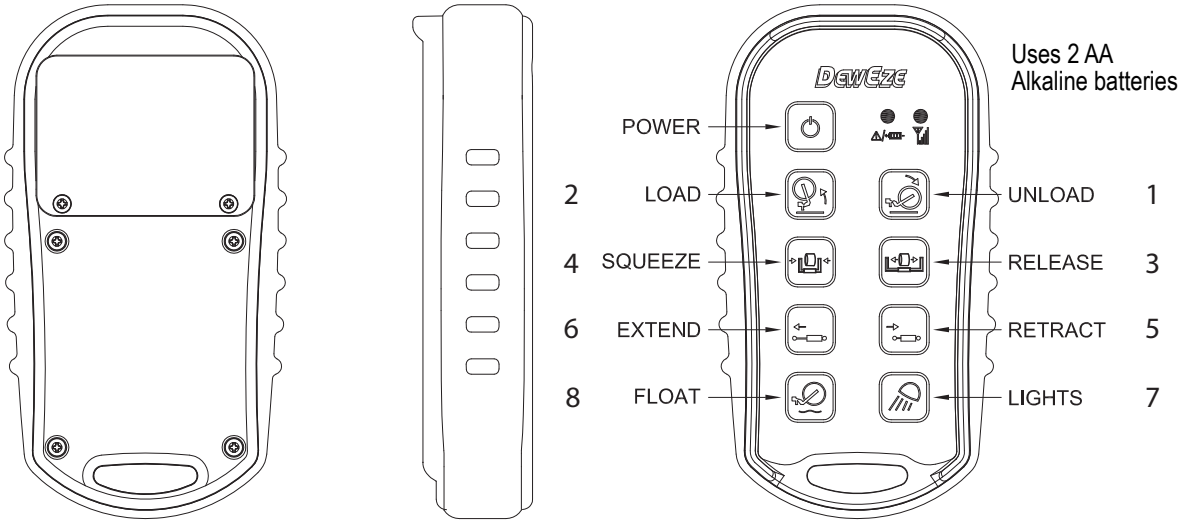


**SYSTEM OPERATION:**
Press and hold the power button on the transmitter until both LEDs turn on, then release. The green LED will flash rapidly when communication has been established. When the receiver is off, the red LED will flash slowly indicating this. With the receiver on, press the corresponding buttons on the tranmitter keypad to turn on and off each of the outputs.

**INDICATOR LIGHTS:**
The transmitter has two LED indicators, the red BATTERY/DIAGNOSTIC indicator and the green TRANSMIT indicator.
The green TRANSMIT indicator flashes rapidly whenever there is communication between the transmitter and the receiver.
The red BATTERY/DIAGNOSTIC indicator blinks once per second when the battery voltage is low. It also blinks when there is a problem with the system in the form of an error code. Refer to the ERROR CODE CHART tables for more information.
*Note: To check for low battery, turn the receiver off and leave the transmitter on. If the transmitter red LED continues to blink, the battery is low. If the red LED blinks only when the receiver is ON, count the number of blinks and refer to the ERROR CODE CHART.*

**SLEEP TIME:**
The transmitter is factory set to turn off (sleep) after 15 minutes. Use the following procedure to change the time before sleep mode.

1. Press and hold 3 (UNSQEEZE), 4 (SQUEEZE), 8 (FLOAT) and POWER
2. Release the buttons and both lights should blink once per second.
3. Choose one of the following buttons:
    a. 1 (UNLOAD) = 15 min
    b. 2 (LOAD) = 30 min
    c. 3 (UNSQUEEZE) = 1 hr
    d. 4 (SQUEEZE) = 2 hr
    e. 8 (FLOAT) = sleep disabled.

**PROGRAMMING OUTPUTS:**
The Kar-Tech transmitter can be programmed for different machines. Follow steps to ensure correct mode is enabled.

BALE BED

1. Ensure transmitter and receiver are in sync
2. Turn OFF receiver and turn transmitter ON
3. Press and hold buttons 1 (UNLOAD), 4 (SQUEEZE), & 8 (FLOAT). Red LED will start blinking.
4. Turn ON receiver
5. Hold and release button 2 (LOAD).
6. Hold and release POWER button to save and exit the config mode.

***SPECIFICATIONS:***
RF Transmit power (EIRP): 10 mW
RF Frequency: 902-928 MHz
Operating temperature - Radio: -40C to +85C
Battery life (min): 30 hours continuous.
Vibration: 3G to 200Hz
Outputs: 5A max each (20A system max)

# 2 Bank Wiring, Kar-Tech Remote

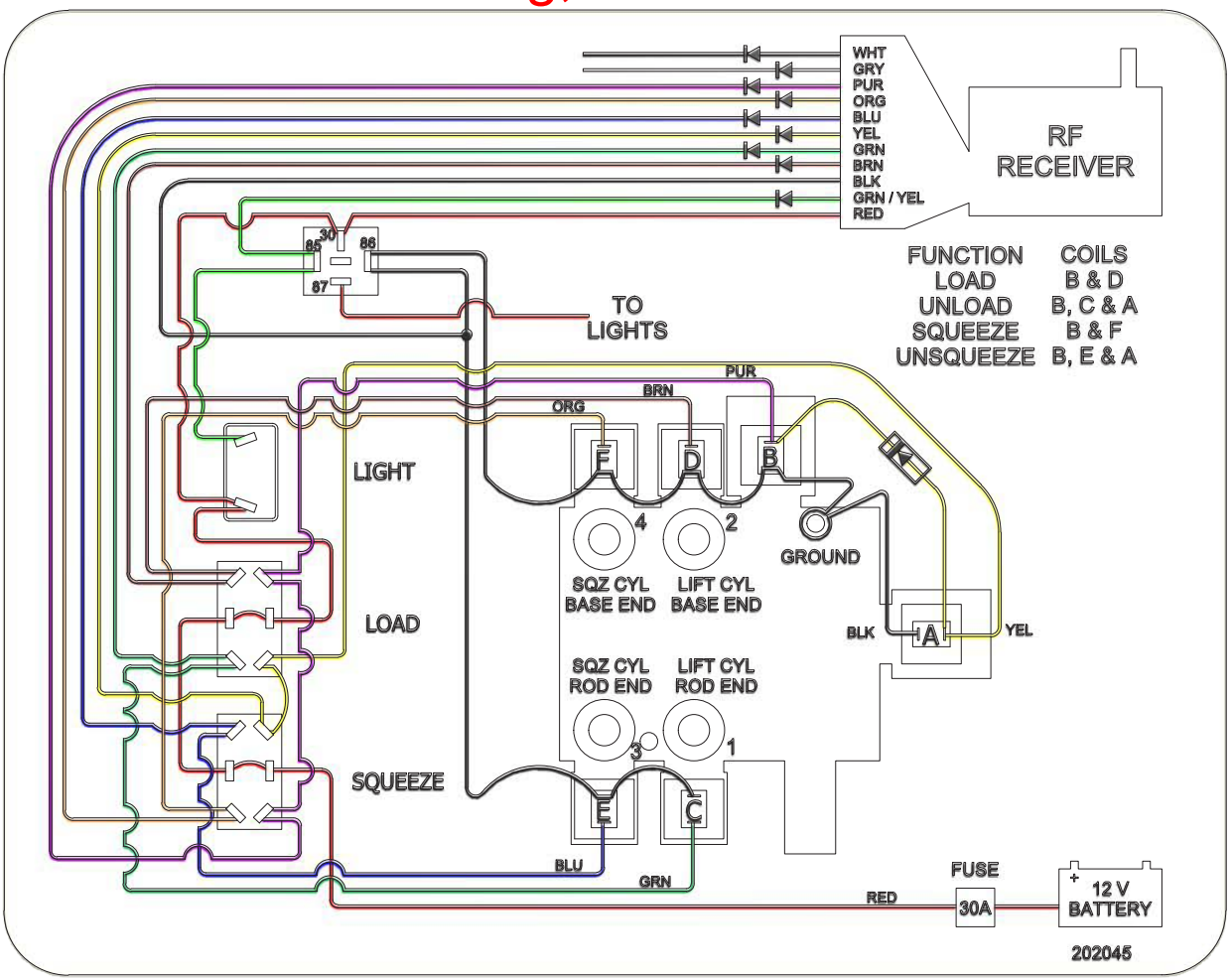


Decal Part# 202045 Harness Part# 232087

Mini Relay SPDT 12V
530111

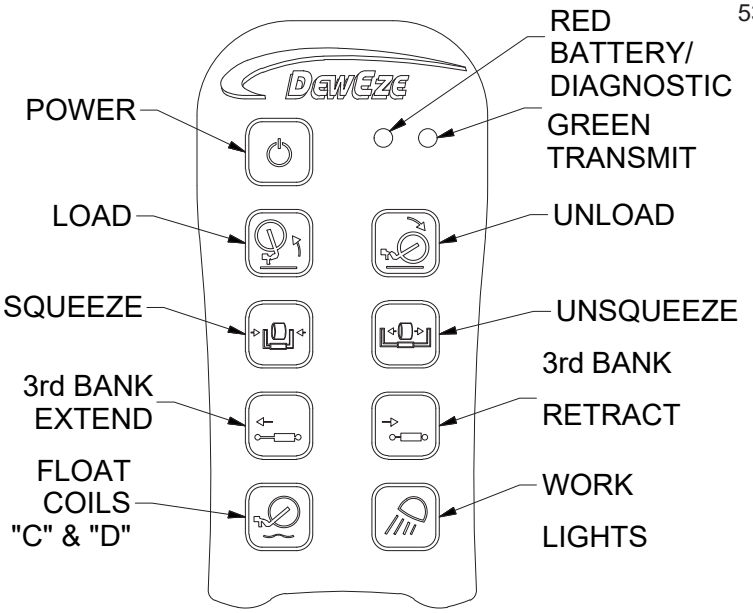


3/11/2011

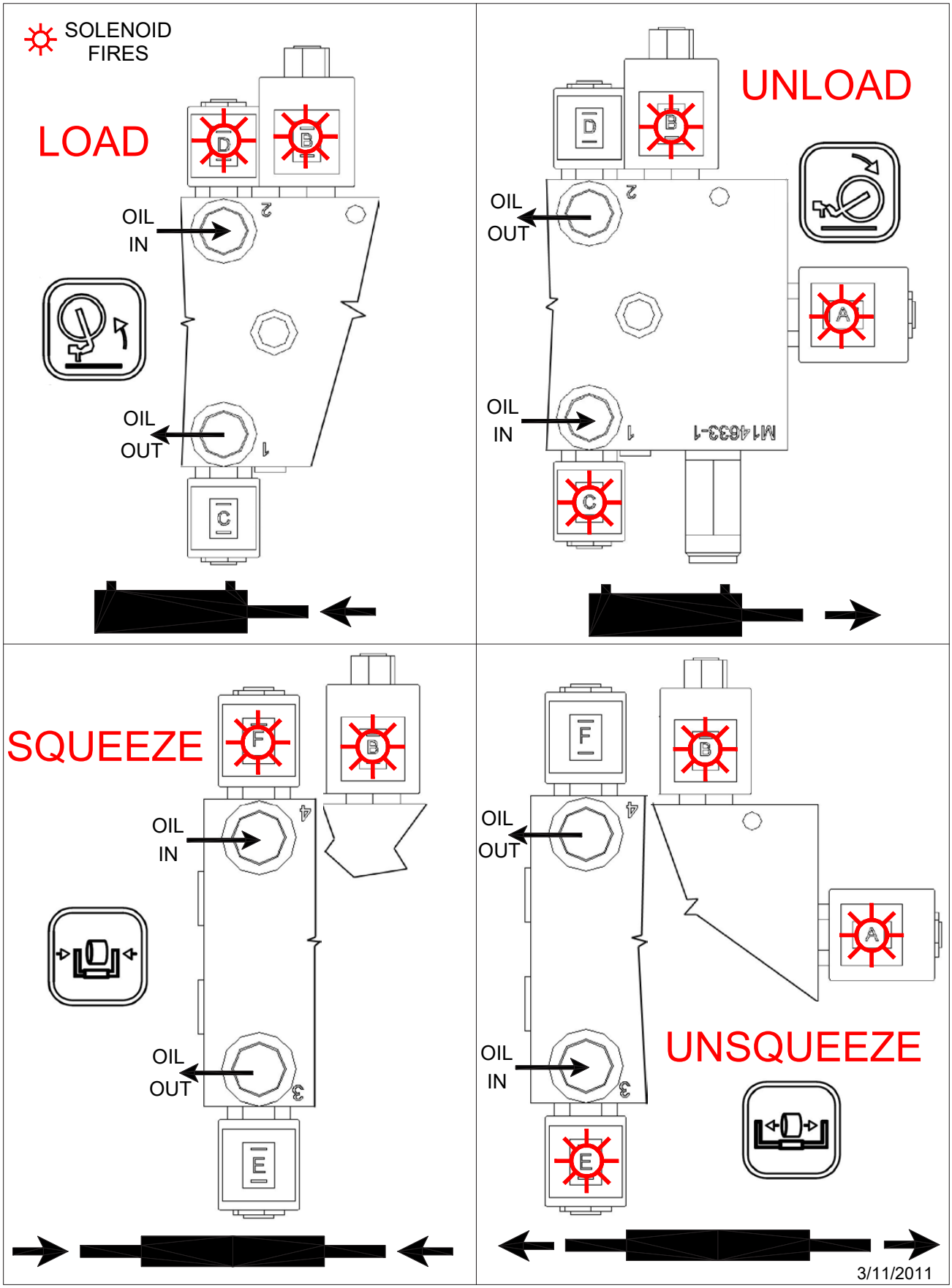
SOLENOID FIRES
LOAD
OIL IN
OIL OUT
UNLOAD
OIL OUT
OIL IN
M14633-1
SQUEEZE
OIL IN
OIL OUT
UNSQUEEZE
OIL OUT
OIL IN
3/11/2011

## Wiring for Gen II Valve

1. Install ground wire 232039 as shown on coils (A,B,C,D,E,F)
2. Install diode harness 232038 (harness has piggy back connectors) per table 1.
3. Install harness 150006 from control handle into back of piggy back connectors per table 1.
4. The red wire from harness 150006 goes the supplied fuse. The fuse wire is connected to the + terminal on battery.
5. The black wire from harness 150006 is spliced into the clutch wire.

| Connection | 232038 | 150006 |
|---|---|---|
| A | Green/Blue | |
| B | Orange | Orange |
| C | Green/Green | Green |
| D | Brown | Brown |
| E | Blue/Blue | Blue |
| F | Yellow | Yellow |
| CLUTCH | | Black |
| BATTERY (+) | | Red |

Table 1

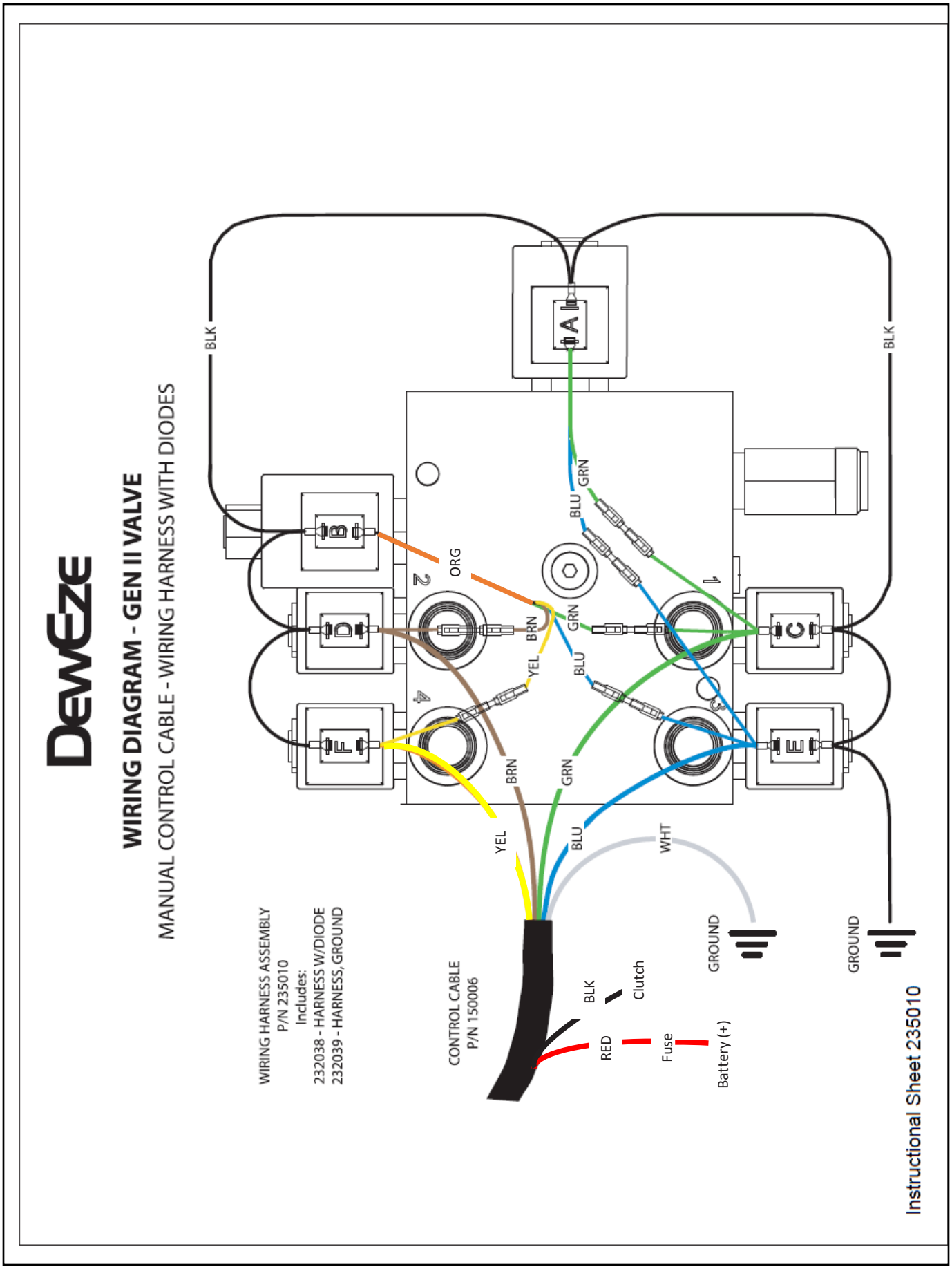
DEWEZE
WIRING DIAGRAM - GEN II VALVE
MANUAL CONTROL CABLE - WIRING HARNESS WITH DIODES
WIRING HARNESS ASSEMBLY
P/N 235010
Includes:
232038 - HARNESS W/DIODE
232039 - HARNESS, GROUND
CONTROL CABLE
P/N 150006
BLK
RED
Clutch
Fuse
Battery (+)
GROUND
WHT
YEL
BRN
GRN
BLU
ORG
A
B
C
D
E
F
1
2
3
4
Instructional Sheet 235010

# 3rd Bank Wiring, Kar-Tech Remote

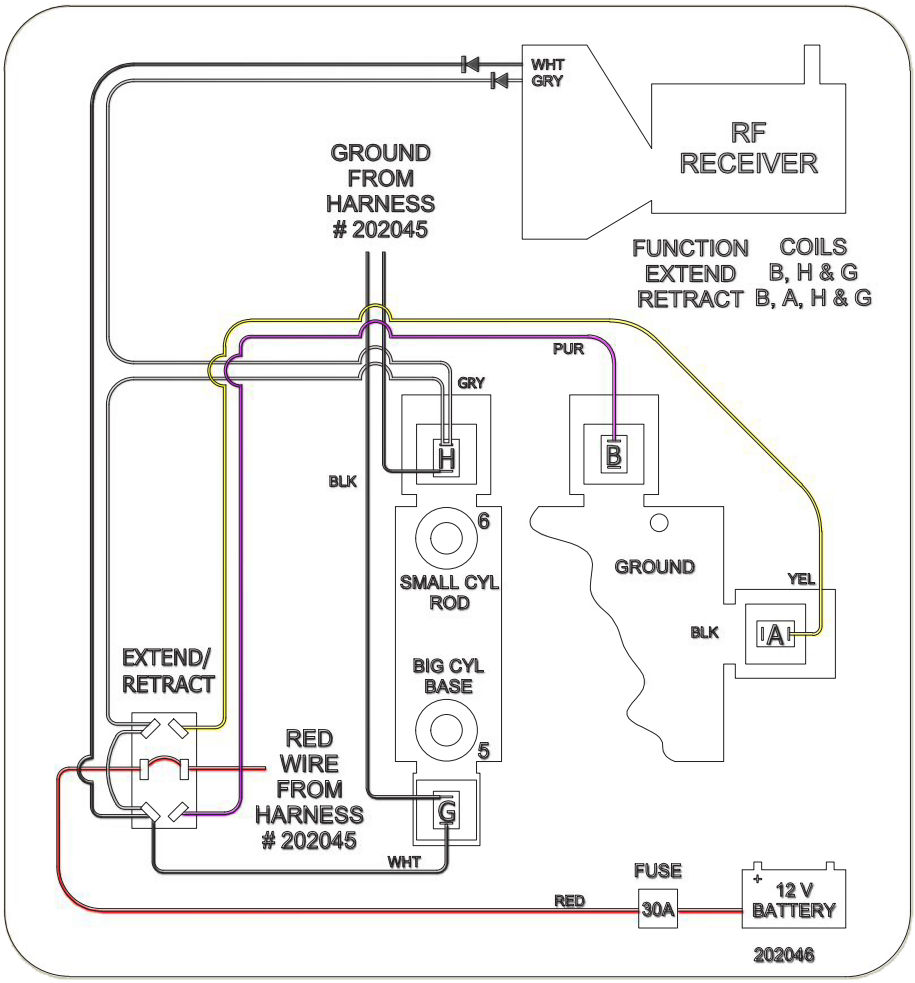


Decal Part# 202046 Harness Part# 232088

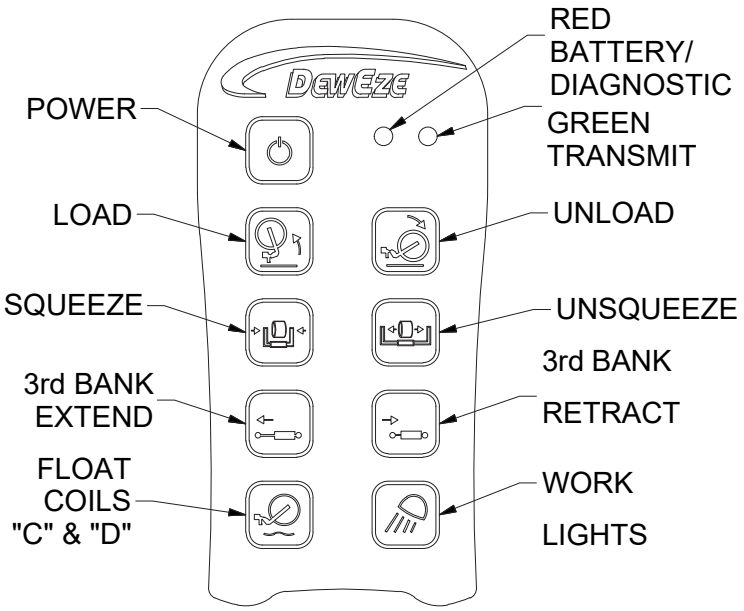


3/11/2011

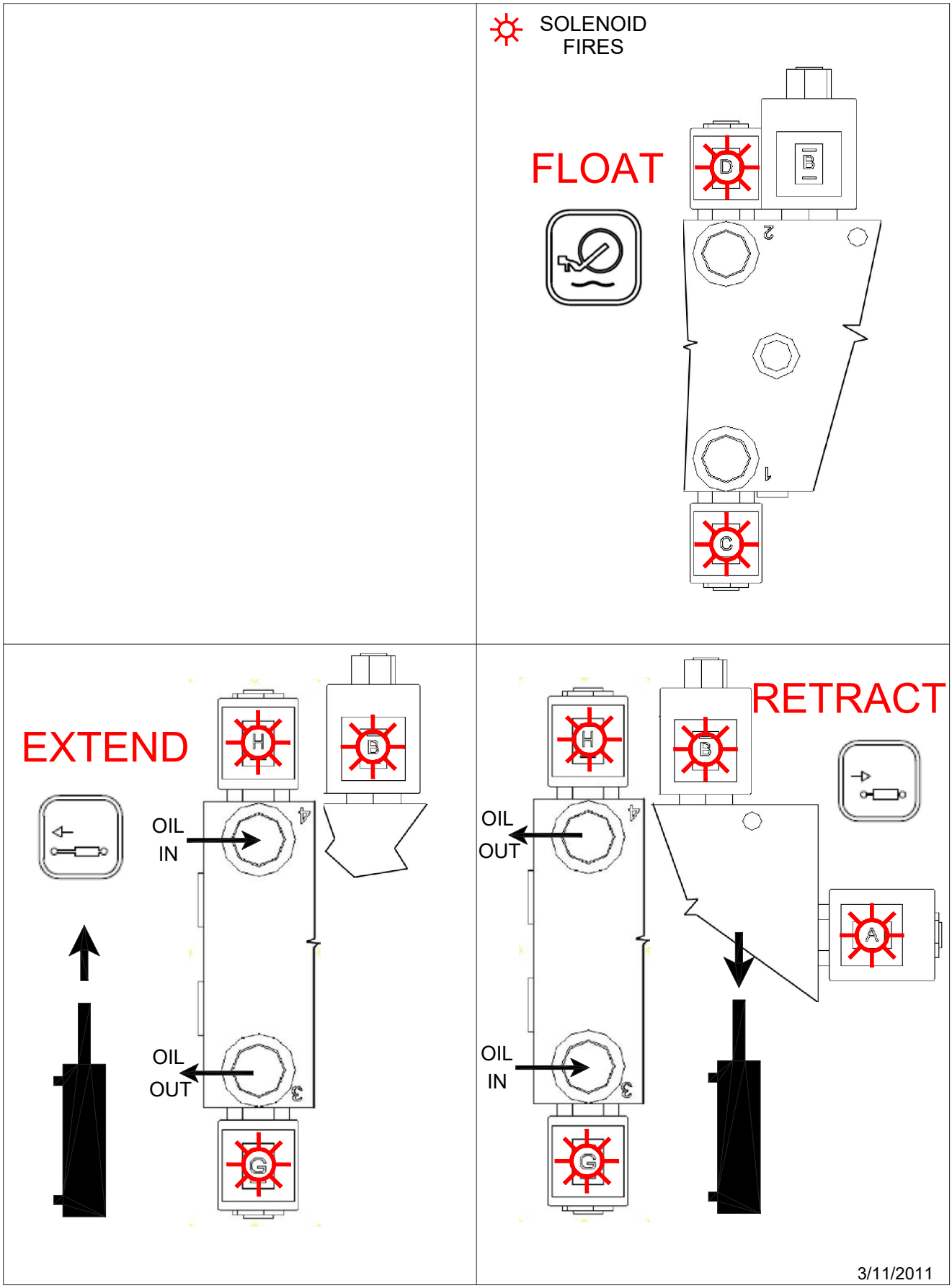
SOLENOID FIRES
FLOAT
D
B
C
1
2
EXTEND
H
B
G
OIL IN
OIL OUT
4
3
RETRACT
H
B
G
A
OIL OUT
OIL IN
4
3
3/11/2011

# 2 Bank Wiring, Kar-Tech Remote

Gen 3 Double Poppet, Deutsch

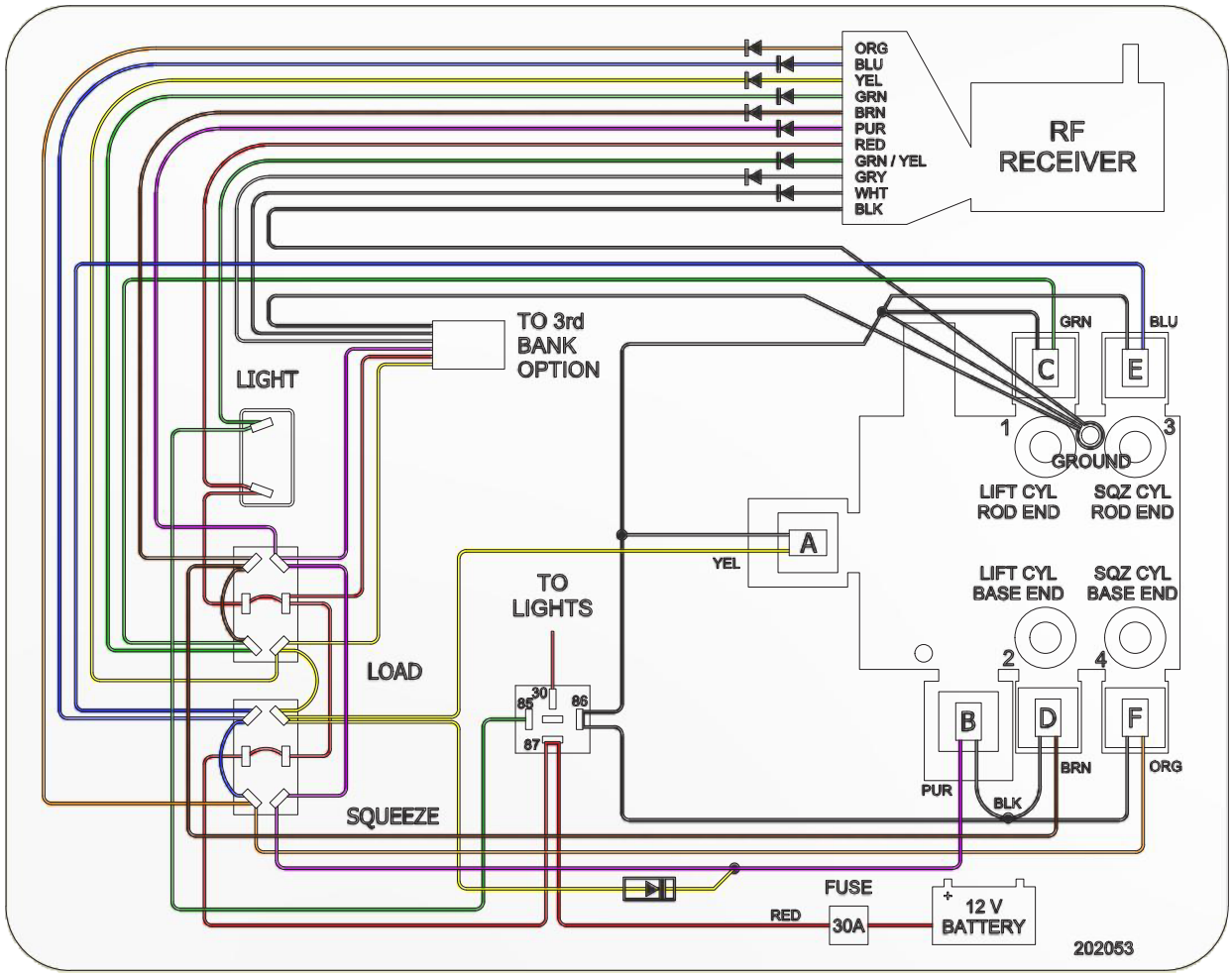


Decal Part# 202053 Harness Part# 232098 Mini Relay SPDT 12V 530111

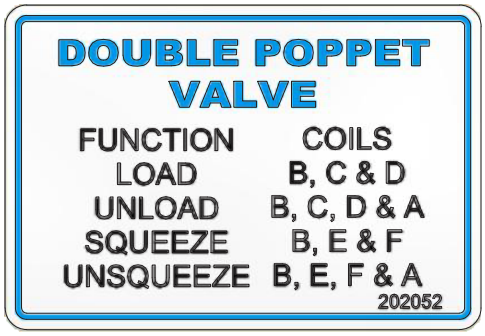


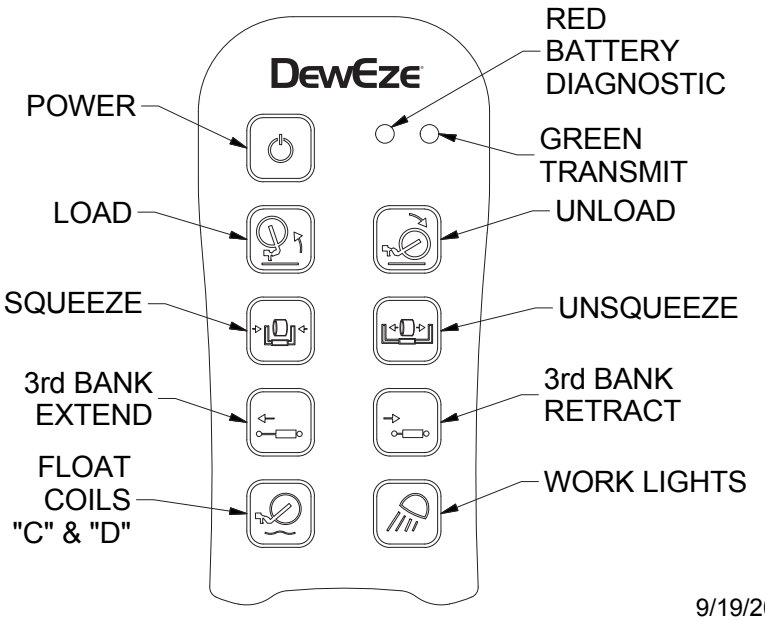


PAGE 1 OF 2

9/19/2014

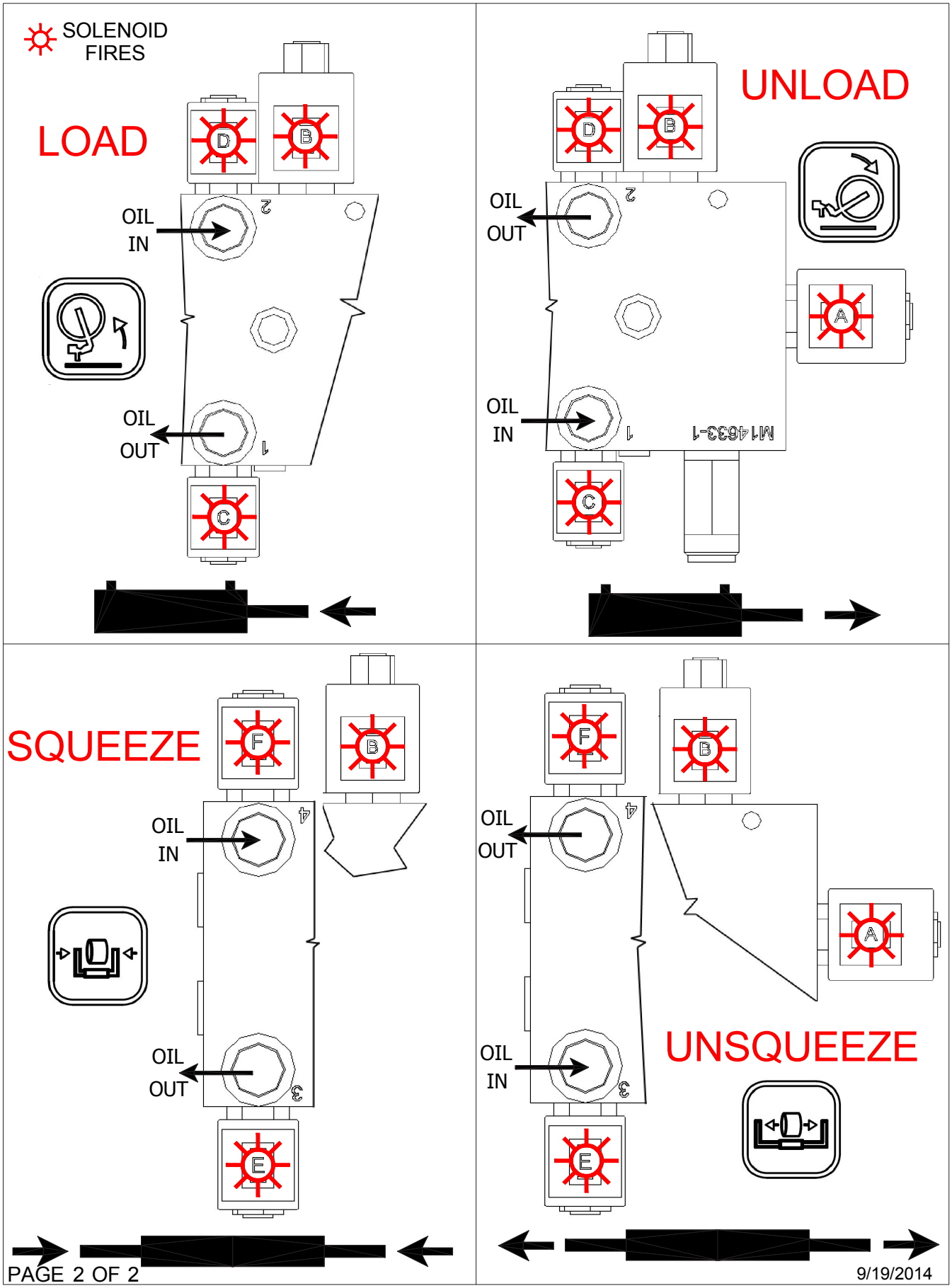
SOLENOID FIRES
LOAD
OIL IN
OIL OUT
UNLOAD
OIL OUT
OIL IN
M14633-1
SQUEEZE
OIL IN
OIL OUT
UNSQUEEZE
OIL OUT
OIL IN
PAGE 2 OF 2
9/19/2014

# 3rd Bank Wiring, Kar-Tech Remote

Gen 3 Double Poppet, Deutsch

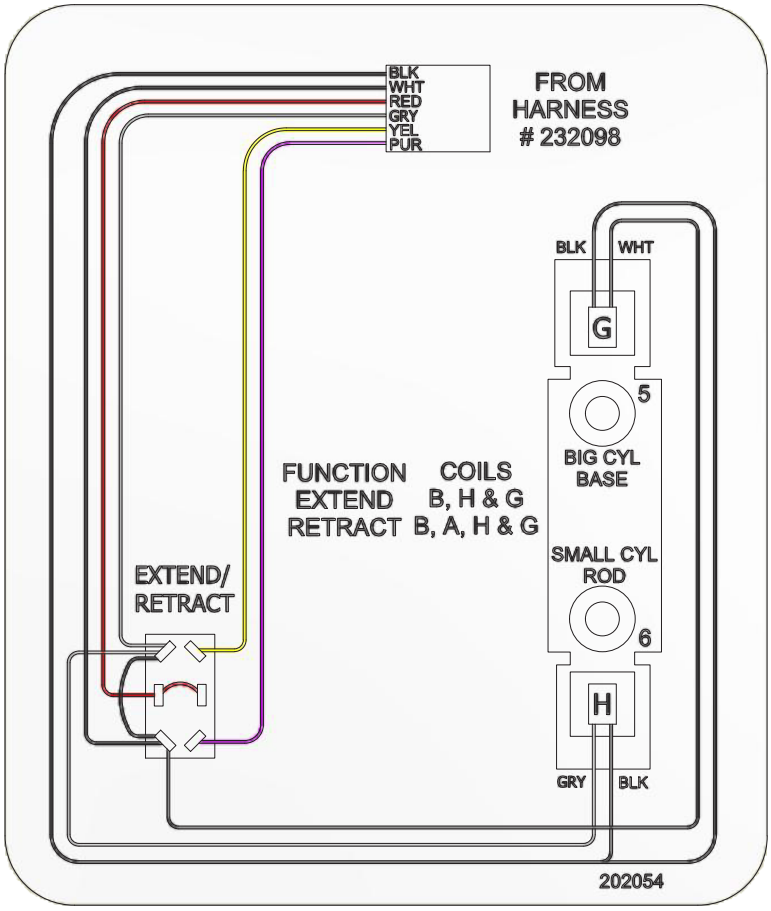


Decal Part# 202054 Harness Part# 232099

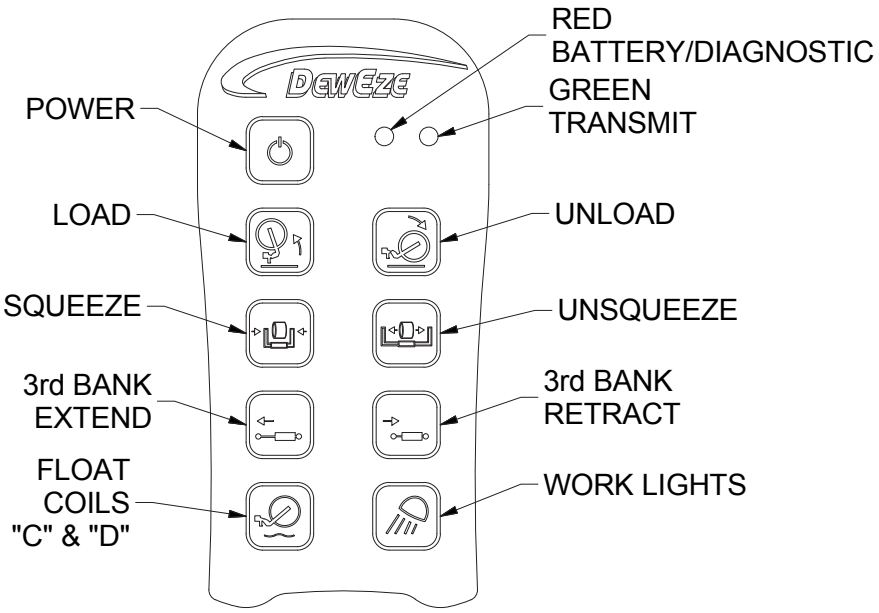


9/19/2014

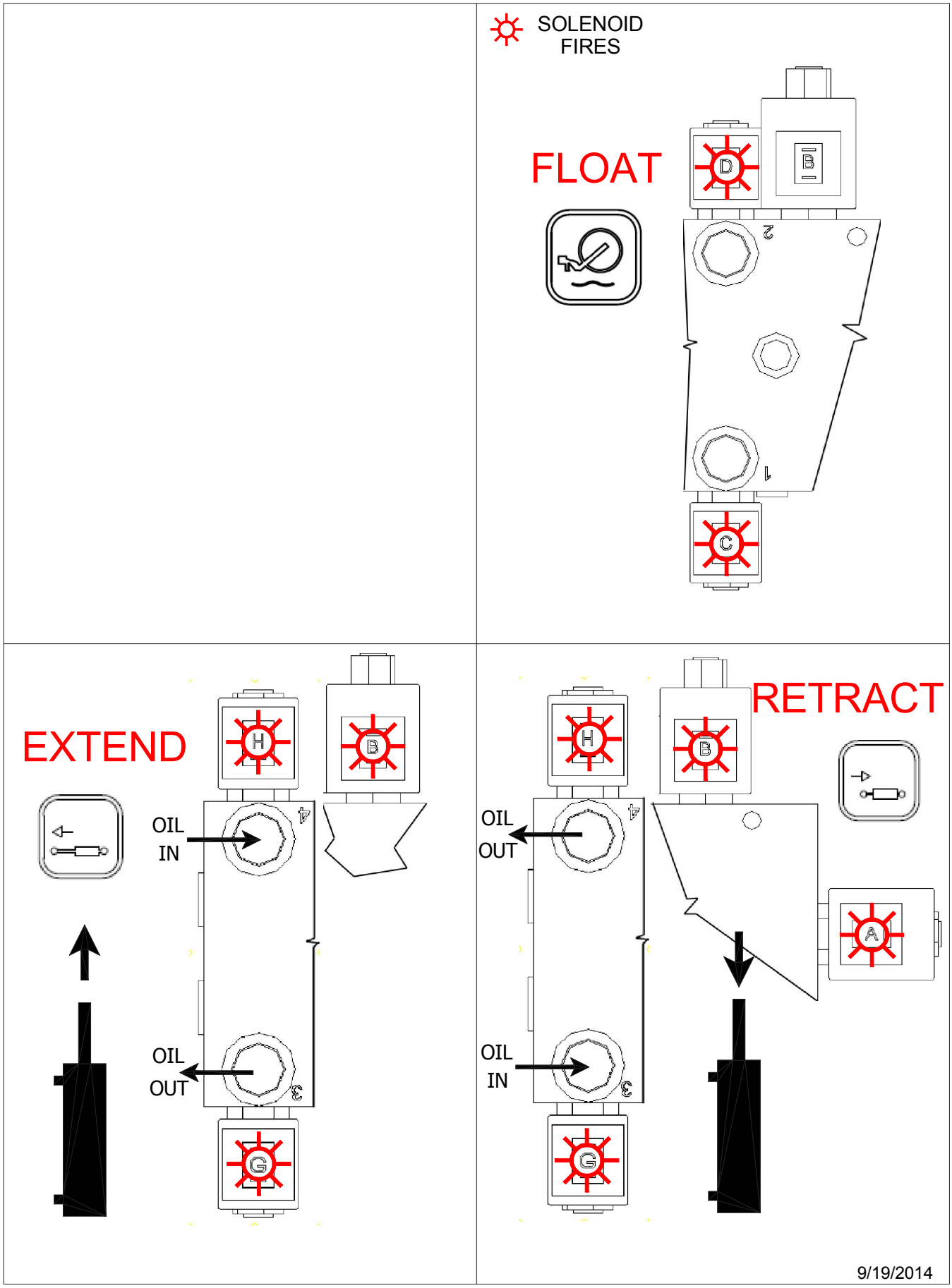
SOLENOID FIRES
FLOAT
D
B
C
2
1
EXTEND
H
B
G
OIL IN
OIL OUT
4
3
RETRACT
H
B
A
G
OIL OUT
OIL IN
4
3
9/19/2014

# Standard E/H Power Kit

## E / H KIT INSTALLATION INSTRUCTIONS

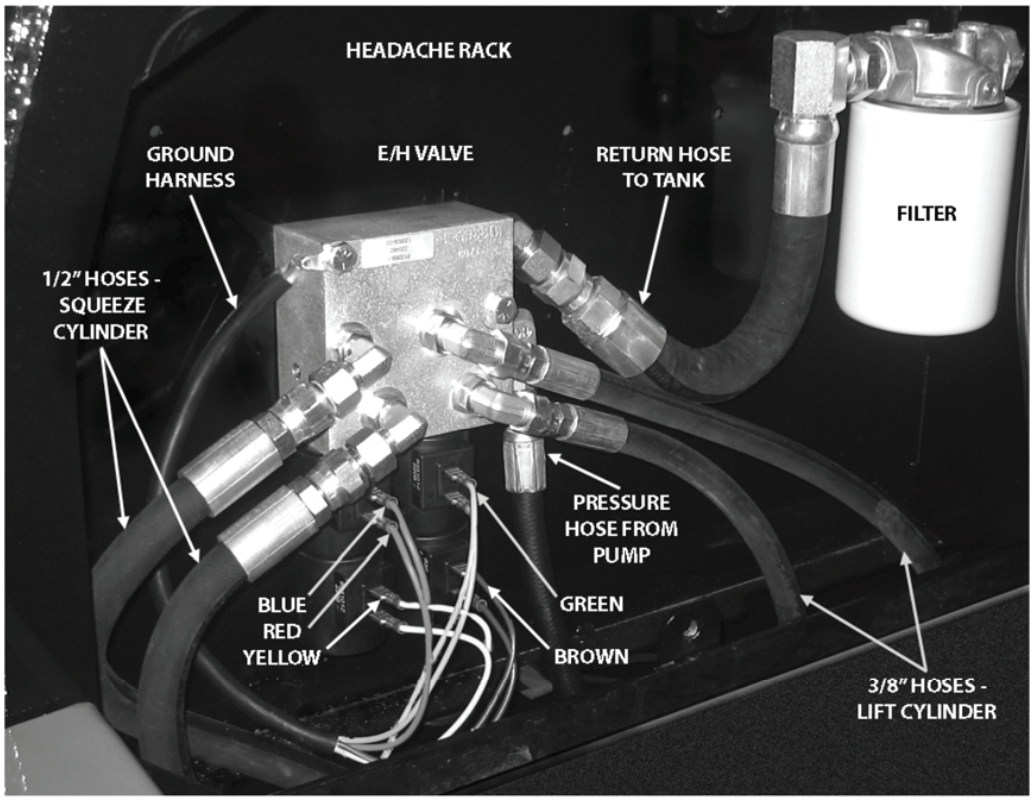


1) Attach adapters to E/H valve and install inside cavity on headache rack.

2) Attach return hose to valve and filter housing. Attach pressure hose from pump.

3) Attach blue and yellow wires from hand control to valve cartridge that controls squeeze cylinder as indicated.

4) Attach green and brown wires from hand control to valve cartridge that controls lift cylinder as indicated.

5) Attach ground harness to valve coils with similar color wires (yellow, brown and green). Blue and red wires are on same coil.

6) Attach 1/2" hoses from squeeze cylinder to side of valve controlled by blue and yellow wires. If hand control does not respond as desired, pioneer couples on rear of bed may be reversed or blue and yellow wires may be reversed.

7) Attach 3/8" hoses from lift cylinder side of valve controlled by green and brown wires. If hand control does not respond as desired, green and brown wires may be reversed.

8) Use diagram to locate holes in driver's side toolbox.

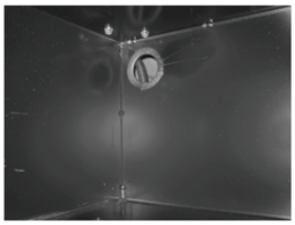

9) Drill 2.5" hole with hole saw and use molding to protect hoses from rough edges.

10) Drill 3/8" holes for pump as indicated and bolt pump to inside of toolbox.

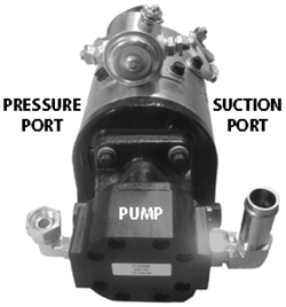


11) Attach suction hose and pressure hose to pump with adapters provided.

12) Attach suction hose to bottom of reservoir as indicated in diagram.

13) Attach black wire from hand control to negative terminal on solenoid.

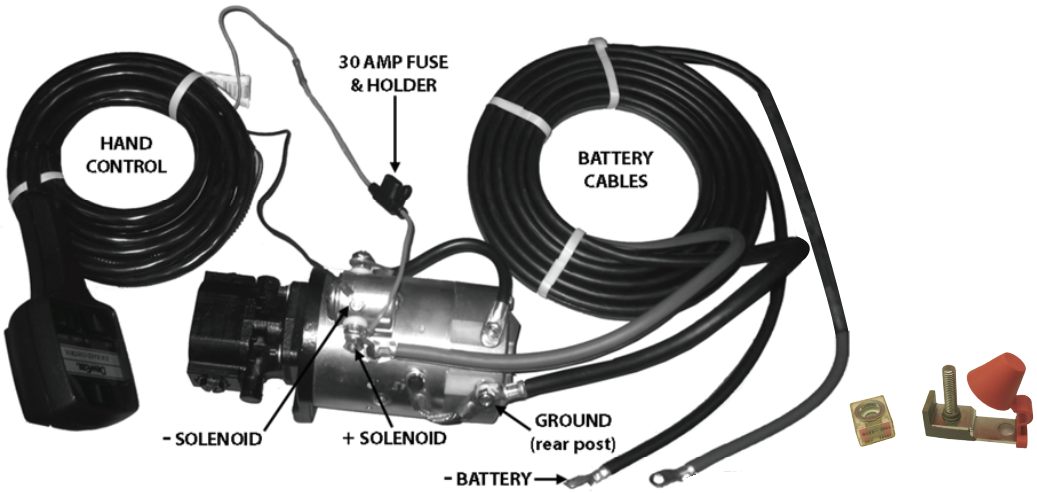


14a) Attach 30-amp fuse holder to positive terminal on solenoid and then to red wire from hand control.

14b) Attach 30-amp fuse holder to positive terminal on battery, run wire thru switch on dash. Then to red wire on valve harness for wireless remote.

15) Run battery cables through hold in toolbox and attach to E/H motor as indicated (black cable to rear post).

16) Run battery cables along frame rail and attach black cable to negative terminal on battery.

17) Attach 200-amp fuse holder to positive battery terminal.

18) Insert 200-amp fuse.

19) Attach red cable from E/H ontop of "ice cube" fuse. Install rubber cap.

# Standard E/H Power Kit W/ Remote

| ITEM | QTY | PART # | DESCRIPTION |
|---|---|---|---|
| 1 | 1 | 110141 | NUT, M8 X 1.25 WIZFLANGE |
| 2 | 4 | 110437 | BOLT, 3/8-16 X 0.75, WIZ FLANGE |
| 3 | 2 | 110645 | NUT, 3/8-16 WIZ FLANGE |
| 4 | 2 | 112136 | Clamp, 3/4" T-Bolt, Supra W2-120 |
| 5 | 1 | 120087 | ADAPTER, 6MB-8MJ45 |
| 6 | 2 | 120142 | ADAPTER, 8MJ-6FJ |
| 7 | 2 | 120149 | ADAPTER, 6MB-6FPX90 |
| 8 | 1 | 120187 | ADAPTER, 12BH-8MB90 |
| 9 | 4 | 120222 | ADAPTER, 6MJ-6MB90 |
| 10 | 1 | 120457 | ADAPTER, 8FJ-10MJ |
| 11 | 1 | 120544 | ADAPTER, 20MB-12FOR |
| 12 | 1 | 120545 | ADAPTER, 12BH-12MB 45° |
| 13 | 1 | 132001 | FUSE HOLDER, ATC, 14 GA., MINI |
| 14 | 1 | 132002 | FUSE, MINI 30 AMP |
| 15 | 1 | 132044 | Switch, Spst, Rocker Led |
| 16 | 1 | 132092 | FUSE COVER, BUSS CFCOVER-1R |
| 17 | 1 | 132093 | FUSE HOLDER, BUSS CFBAR1-M8XSP |
| 18 | 2 | 132094 | FUSE 200 AMP, BUSS MRBF-200 |
| 19 | 1 | 202047 | DECAL, E/H WIRING DIAGRAM, KAR-TECH |
| 20 | 1 | 211353 | E/H SHIELD |
| 21 | 1 | 220492 | VALVE, E/H FLATBED |
| 22 | 1 | 220508 | HOSE, .375 X 50.44, 6MP - 6MP |
| 23 | 1 | 220603 | HOSE, SUCTION, .75 X 54 |
| 24 | 1 | 230140 | E/H MOTOR PUMP/UNIT |
| | 1 | 210884 | MOTOR |
| | 1 | 220651 | PUMP |
| | 1 | 222006 | SEAL KIT, PUMP |
| | 1 | 232089 | SOLENOID, 3 POLE, HEAVY DUTY |
| 25 | 1 | 230155 | BATTERY CABLE, 2GA TWIN LEAD, 186" |
| 26 | 1 | 233003 | Transmitter & Receiver, Kar-Tech |
| | | | NOT SHOWN |
| | 3 | 110119 | NUT, 10-24 LOCK |
| | 3 | 110264 | BOLT, 10-24 X .5 STAINLESS, PHILLIPS |
| | 2 | 110396 | BOLT, 5/16-18 X 2.5 |
| | 2 | 110608 | NUT, 5/16-18 |
| | 2 | 110674 | WASHER, 5/16" LOCK |
| | 2 | 110753 | PLUG, 1/2" BUTTON PLASTIC |
| | 2 | 132035 | SWITCH BOOT |
| | 2 | 132127 | Switch, Toggle, DPDT, (On)-OFF-(ON) |
| | 1 | 202003 | DECAL, SWITCH IDENTIFICATION |
| | 1 | 211387 | EDGE MOLDING, REAR PLATE |
| | 1 | 232090 | HARNESS, E/H WIRELESS, KAR-TECH |

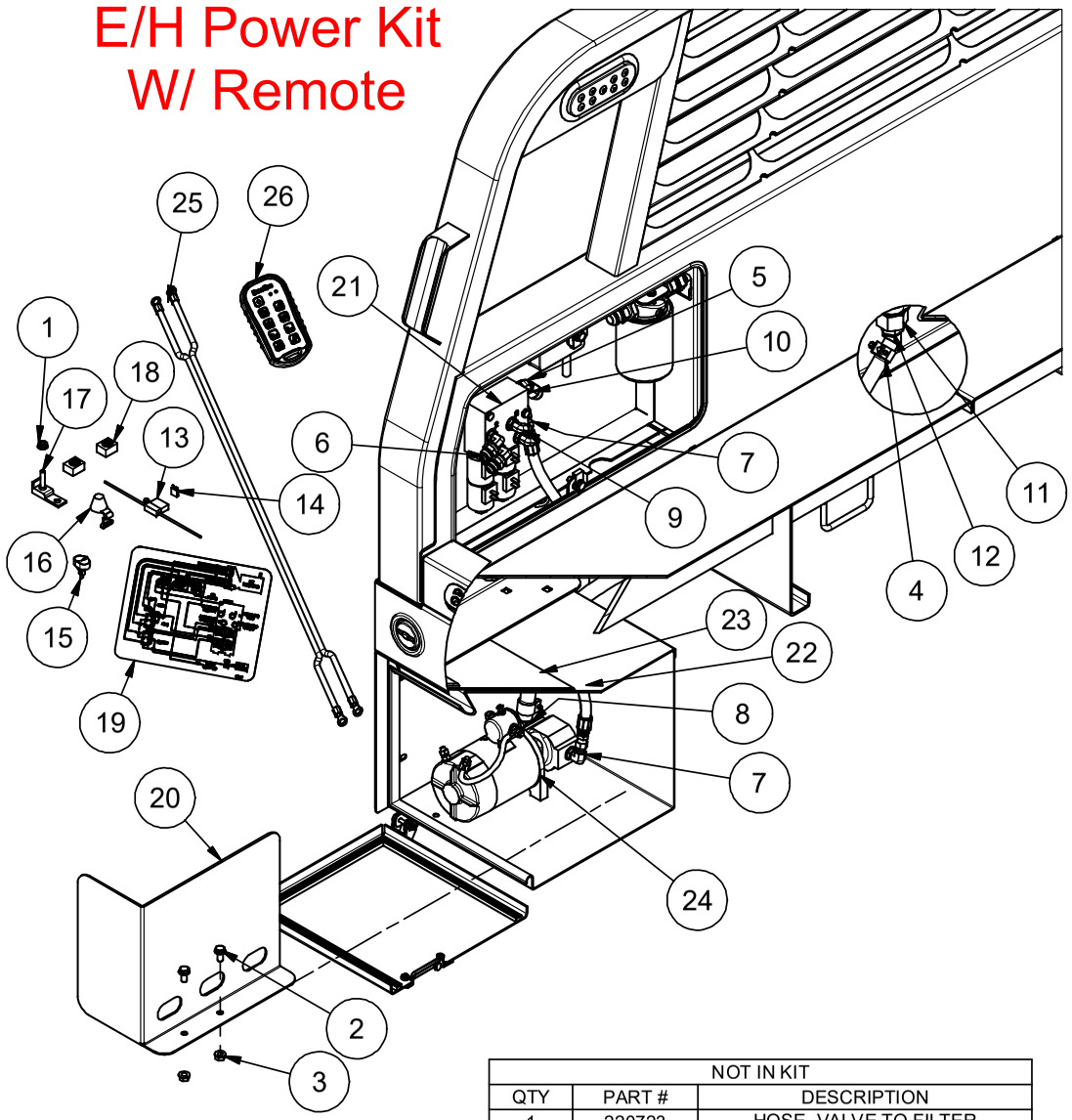


Mini Relay SPDT 12V
530111

| NOT IN KIT | | |
|---|---|---|
| QTY | PART # | DESCRIPTION |
| 1 | 220723 | HOSE, VALVE TO FILTER |
| 1 | 720041 | FILTER HEAD |
| 1 | 720043 | FILTER (WIX 51551) |

4/22/2020

# Standard E/H Wiring, Kar-Tech Remote

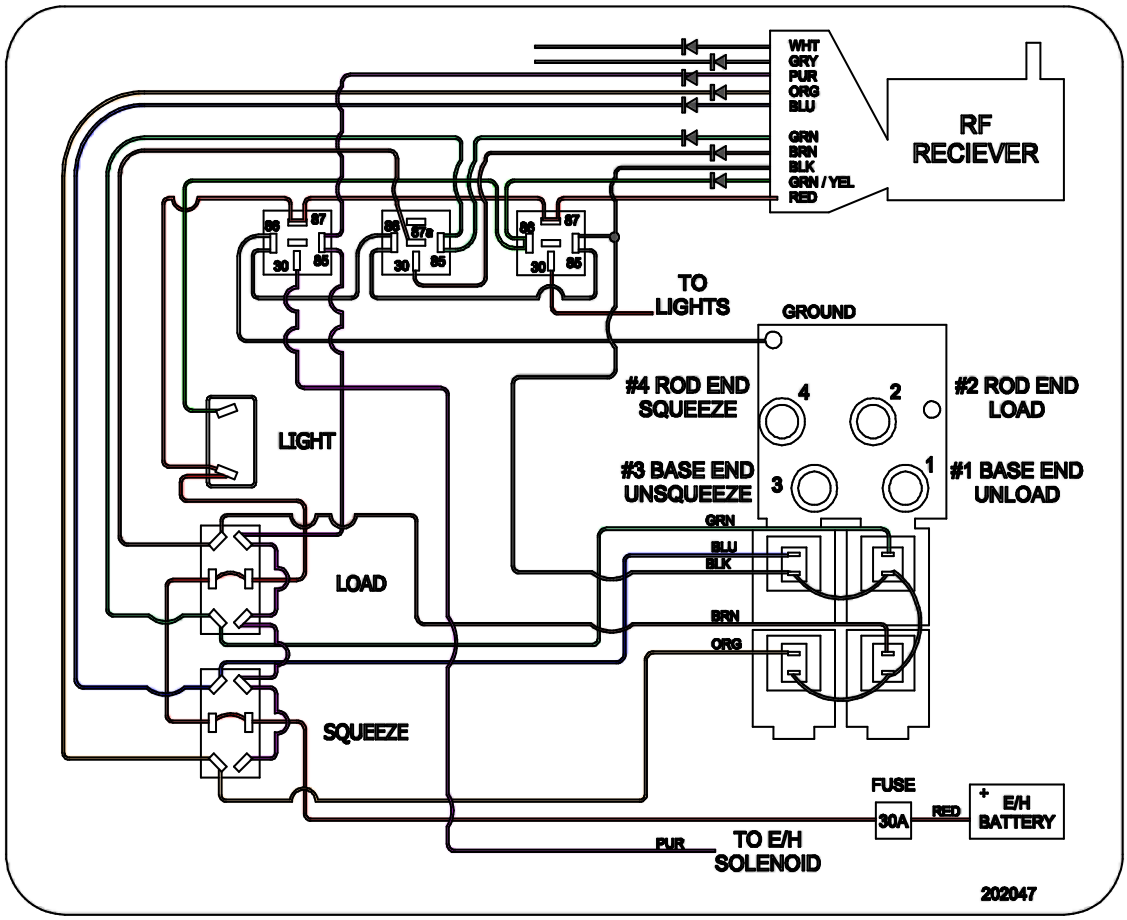


Decal Part# 202047 Harness Part# 232090

Mini Relay SPDT 12V
530111

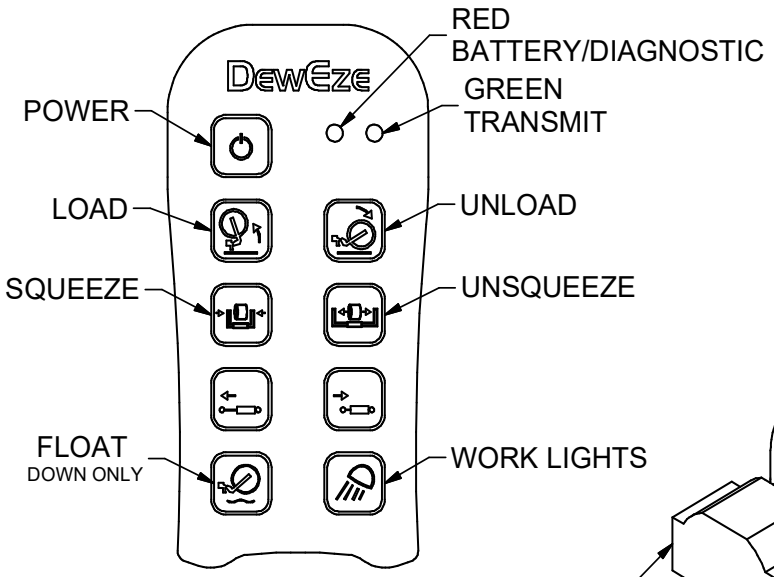


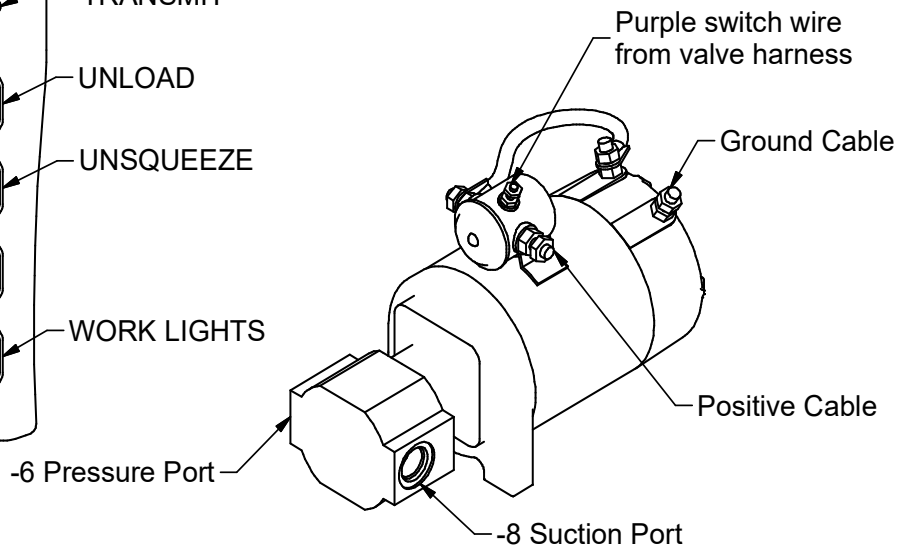


4/22/2020

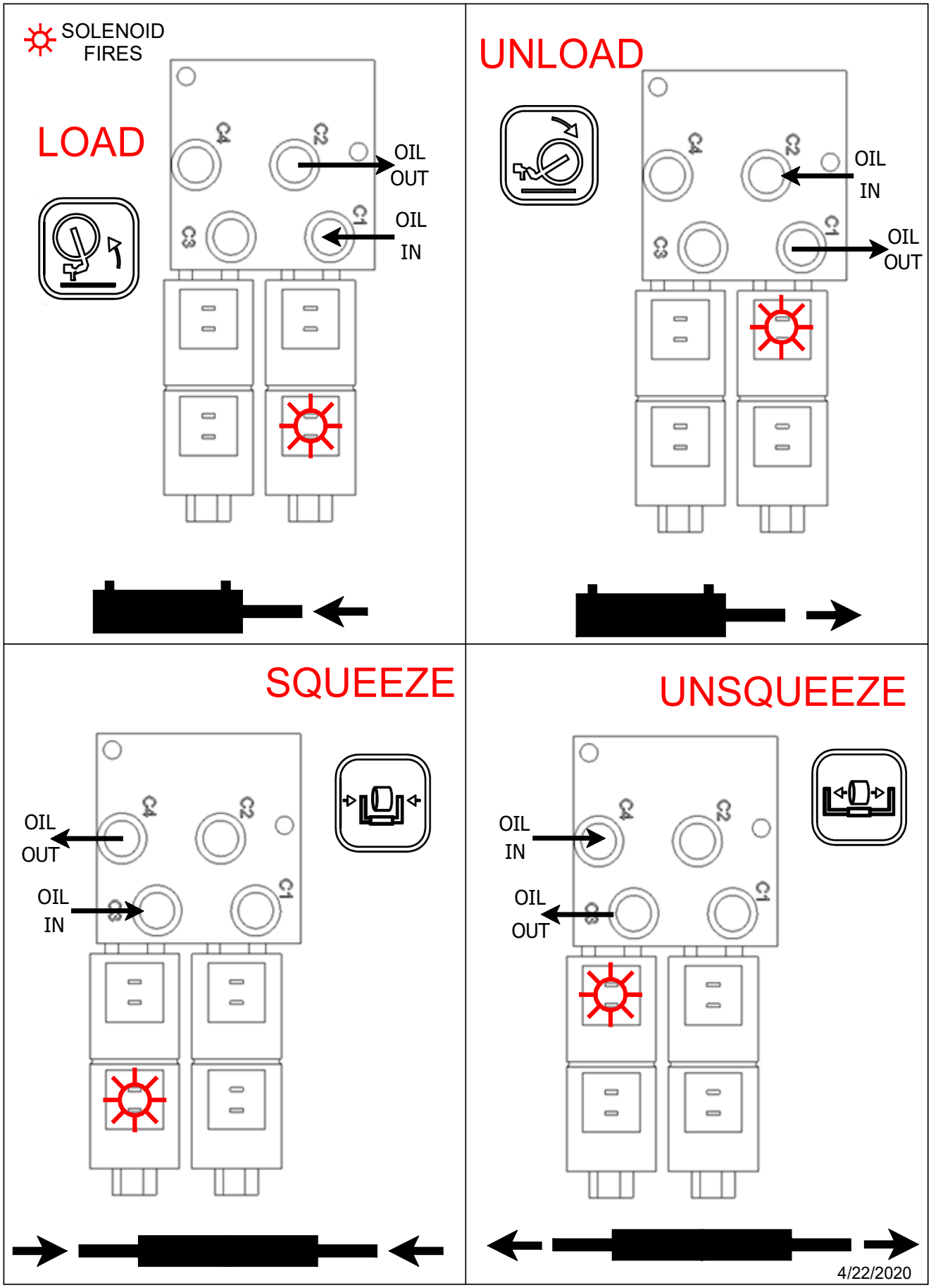
SOLENOID FIRES
LOAD
C4
C2
C3
C1
OIL OUT
OIL IN
UNLOAD
C4
C2
C3
C1
OIL IN
OIL OUT
SQUEEZE
C4
C2
C3
C1
OIL OUT
OIL IN
UNSQUEEZE
C4
C2
C3
C1
OIL IN
OIL OUT
4/22/2020

# E/H Power Kit

| ITEM | QTY | PART # | DESCRIPTION |
|---|---|---|---|
| 1 | 2 | 110396 | BOLT, 5/16-18 X 2.5 |
| 2 | 4 | 110437 | BOLT, 3/8-16 X 0.75, WIZ FLANGE |
| 3 | 2 | 110608 | NUT, 5/16-18 |
| 4 | 2 | 110645 | NUT, 3/8-16 WIZ FLANGE |
| 5 | 2 | 110674 | WASHER, 5/16" LOCK |
| 6 | 4 | 110753 | PLUG, 1/2" BUTTON PLASTIC |
| 7 | 2 | 112136 | Clamp, 3/4" T-Bolt, Supra W2-120 |
| 8 | 1 | 120087 | ADAPTER, 6MB-8MJ45 |
| 9 | 2 | 120142 | ADAPTER, 8MJ-6FJ |
| 10 | 2 | 120149 | ADAPTER, 6MB-6FPX90 |
| 11 | 1 | 120187 | ADAPTER, 12BH-8MB90 |
| 12 | 4 | 120222 | ADAPTER, 6MJ-6MB90 |
| 13 | 1 | 120457 | ADAPTER, 8FJ-10MJ |
| 14 | 1 | 120544 | ADAPTER, 20MB-12FOR |
| 15 | 1 | 120545 | ADAPTER, 12BH-12MB 45° |
| 16 | 1 | 132001 | FUSE HOLDER, ATC, 14 GA., MINI |
| 17 | 1 | 132002 | FUSE, MINI 30 AMP |
| 18 | 1 | 132092 | FUSE COVER, BUSS CFCOVER-1R |
| 19 | 1 | 132093 | FUSE HOLDER, BUSS CFBAR1-M8XSP |
| 20 | 2 | 132094 | FUSE 200 AMP, BUSS MRBF-200 |
| 21 | 1 | 150027 | HAND CONTROL & CABLE ASSY E/H FLATBED |
| 22 | 1 | 211353 | E/H SHIELD |
| 23 | 1 | 220492 | VALVE, E/H FLATBED |
| 24 | 1 | 220508 | HOSE, .375 X 50.44, 6MP - 6MP |
| 25 | 1 | 220603 | HOSE, SUCTION, .75 X 54 |
| 26 | 1 | 230140 | E/H MOTOR PUMP/UNIT |
| | 1 | 210884 | MOTOR |
| | 1 | 220651 | PUMP |
| | 1 | 222006 | SEAL KIT, PUMP |
| | 1 | 232089 | SOLENOID, 3 POLE, HEAVY DUTY |
| 27 | 1 | 230155 | BATTERY CABLE, 2GA TWIN LEAD, 186" |
| | | | NOT SHOWN |
| 28 | 1 | 211387 | EDGE MOLDING, REAR PLATE |
| 29 | 1 | 230119 | CABLE, SOLENOID GROUND |
| 30 | 1 | 730008 | TERMINAL, BUTT CONNECTOR, 14-16 |
| 31 | 1 | 730013 | TERMINAL, RING, 5/16", 14-16 |
| | | | NOT IN KIT |
| 32 | 1 | 220723 | HOSE, VALVE TO FILTER |
| | 1 | 720041 | FILTER HEAD |
| | 1 | 720043 | FILTER (WIX 51551) |

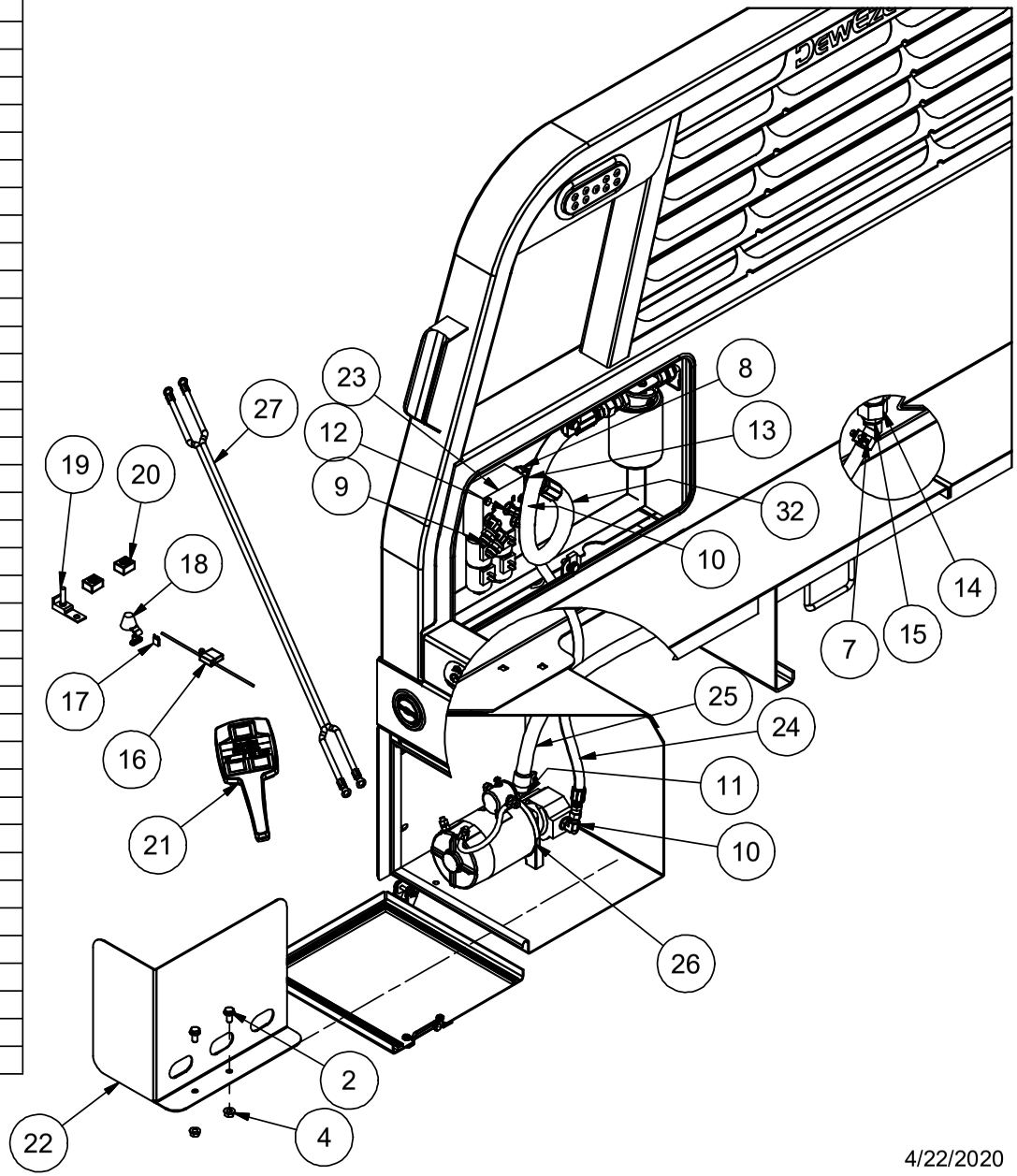


4/22/2020

# E/H Power Kit

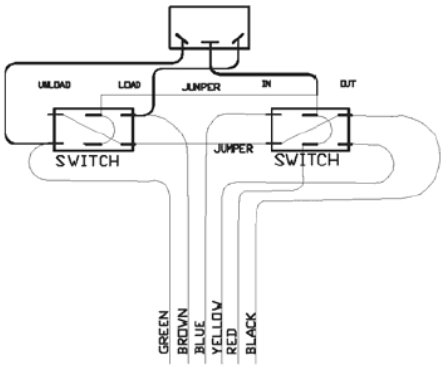


WIRING DIAGRAM
SWITCHES SHOWN FROM BOTTOM

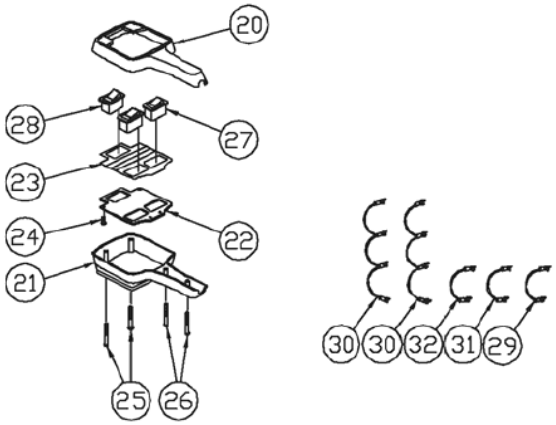


| | | |
|---|---|---|
| 20 | 150001 | TOP HOUSING (1) |
| 21 | 150003 | BOTTOM HOUSING (1) |
| 22 | 150002 | SWITCH PLATE (1) |
| 23 | 150004 | DECAL (1) |
| 24 | 150013 | SCREW (4) |
| 25 | 150015 | SCREW (2) |
| 26 | 150014 | SCREW (2) |
| 27 | 130029 | SWITCH DPDT (2) |
| 28 | 130002 | MOMENTARY SWITCH (1) |
| 29 | 150029 | JUMPER WIRE/HOT (1) |
| 30 | 150030 | JUMPER WIRE/HOT (2) |
| 31 | 150031 | JUMPER WIRE/GRN. (1) |
| 32 | 150032 | JUMPER WIRE/BRN. (1) |

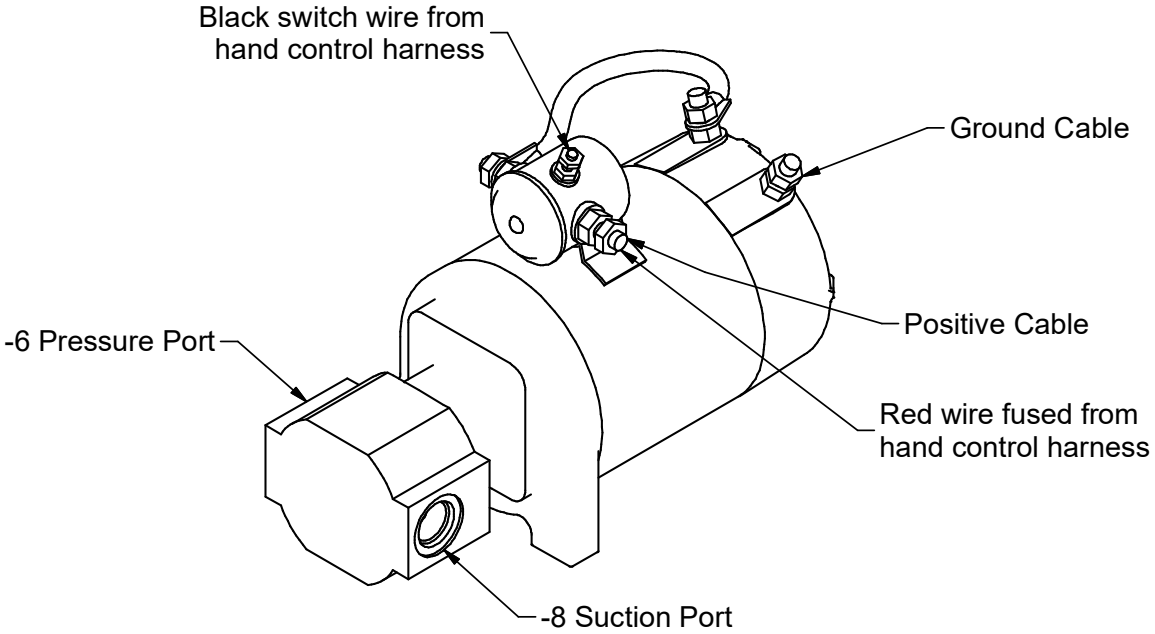


4/22/2020

# DEWEZE E/H KIT - 30" TOOLBOX MODIFICATION

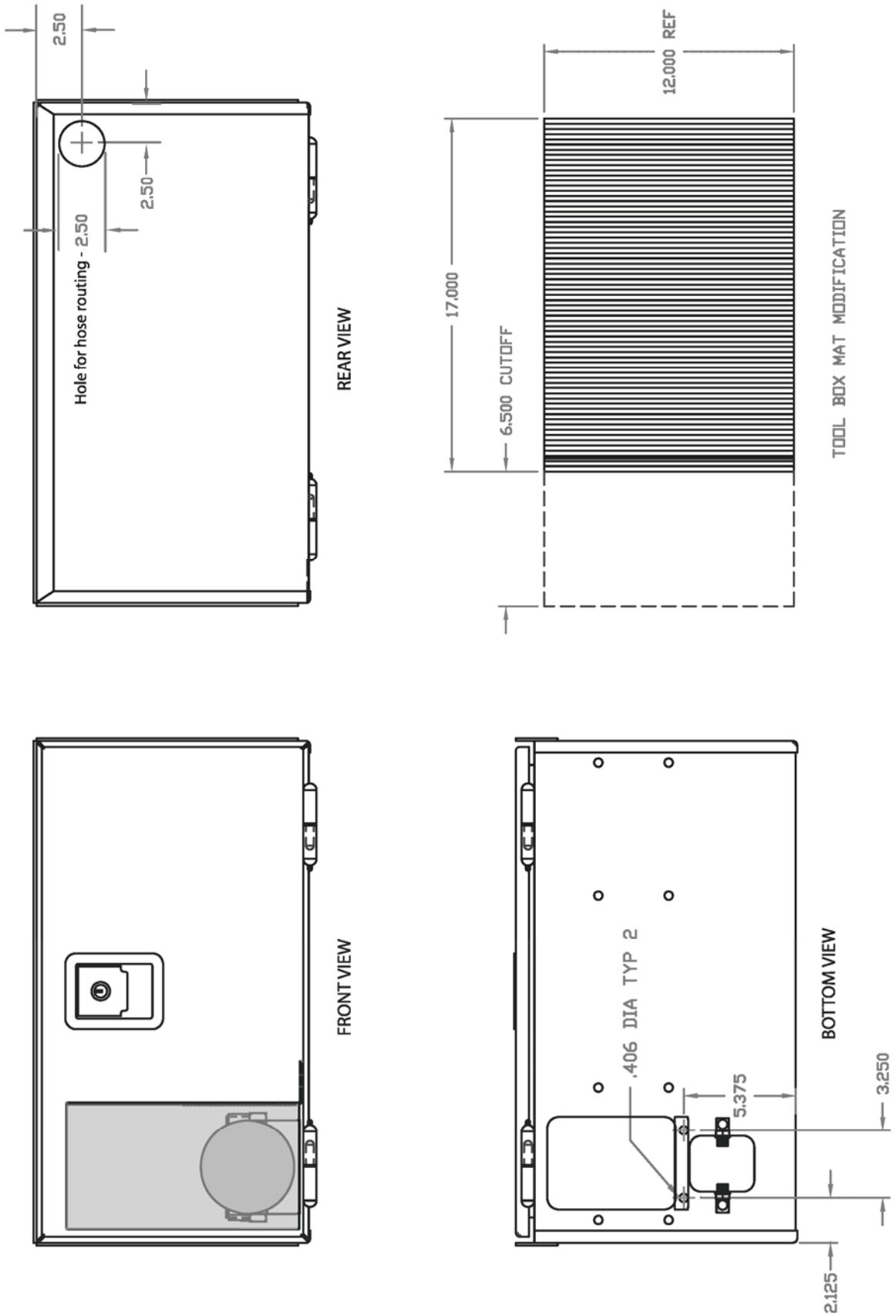

## E / H KIT INSTALLATION INSTRUCTIONS

* Read all instructions first.

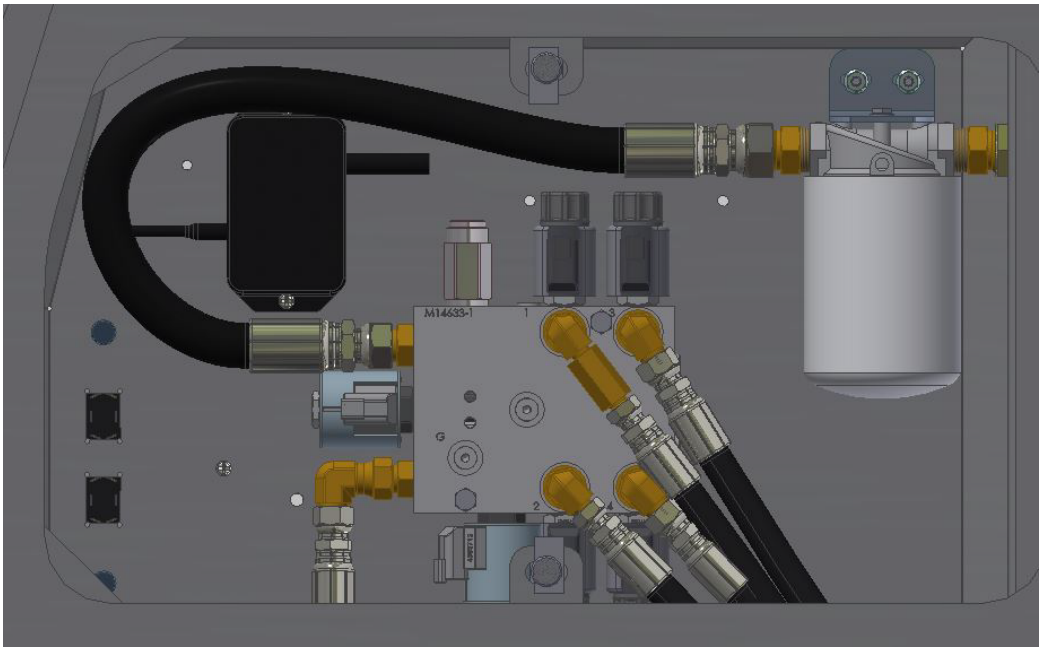


1. Attach adapters to valve and install inside cavity on headache rack.

2. Attach valve harness per diagram on decal.

3. Attach return hose to valve and filter housing. Attach pressure hose from pump.

4. Attach 1/2” hoses from squeeze cylinder to valve ports #3 & #4.

5. Attach 3/8” hoses from lift cylinder to valve ports #1 & #2.

6. Use cover plate to locate cutout in right side toolbox.

7. Use access cover or edge molding to protect hoses.

8. Drill holes for 3/8” bolts as indicated and bolt pump to inside of toolbox.

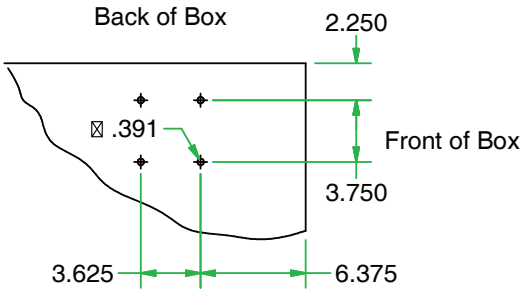

9. Attach power harness as indicated.

10. Attach 30-amp fuse holder to positive terminal on battery, run wire through switch on dash and then to the red wire on the harness.

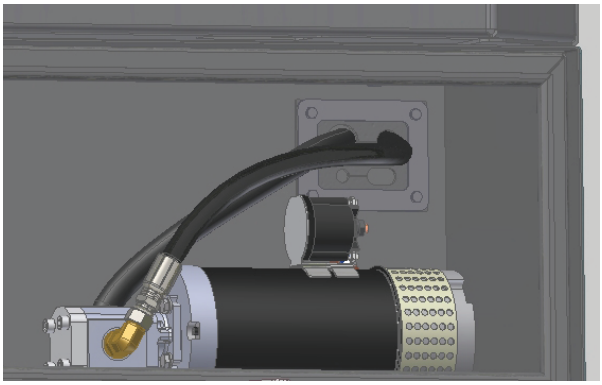

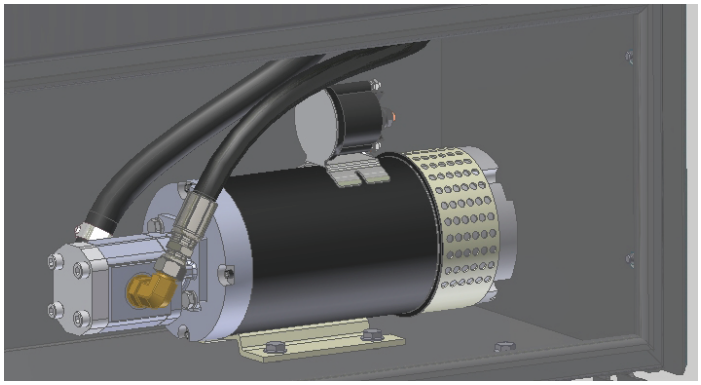

11. Attach suction hose and pressure hose to pump with adapters provided.

12. Attach suction hose to bottom of reservoir.

13. Run battery cables through hole in toolbox and attach to E/H motor as indicated.

14. Run battery cables along frame rail and attach black cable to negative terminal on battery.

15. Attach 200-amp fuse holder to positive battery terminal.

16. Insert 200-amp fuse.

17. Attach red cable from E/H ontop of “ice cube” fuse. Install rubber cap.

If installing the 735021 Switch Unit — Read the E/H Hybrid specific instructions first.

# Heavy Duty E/H

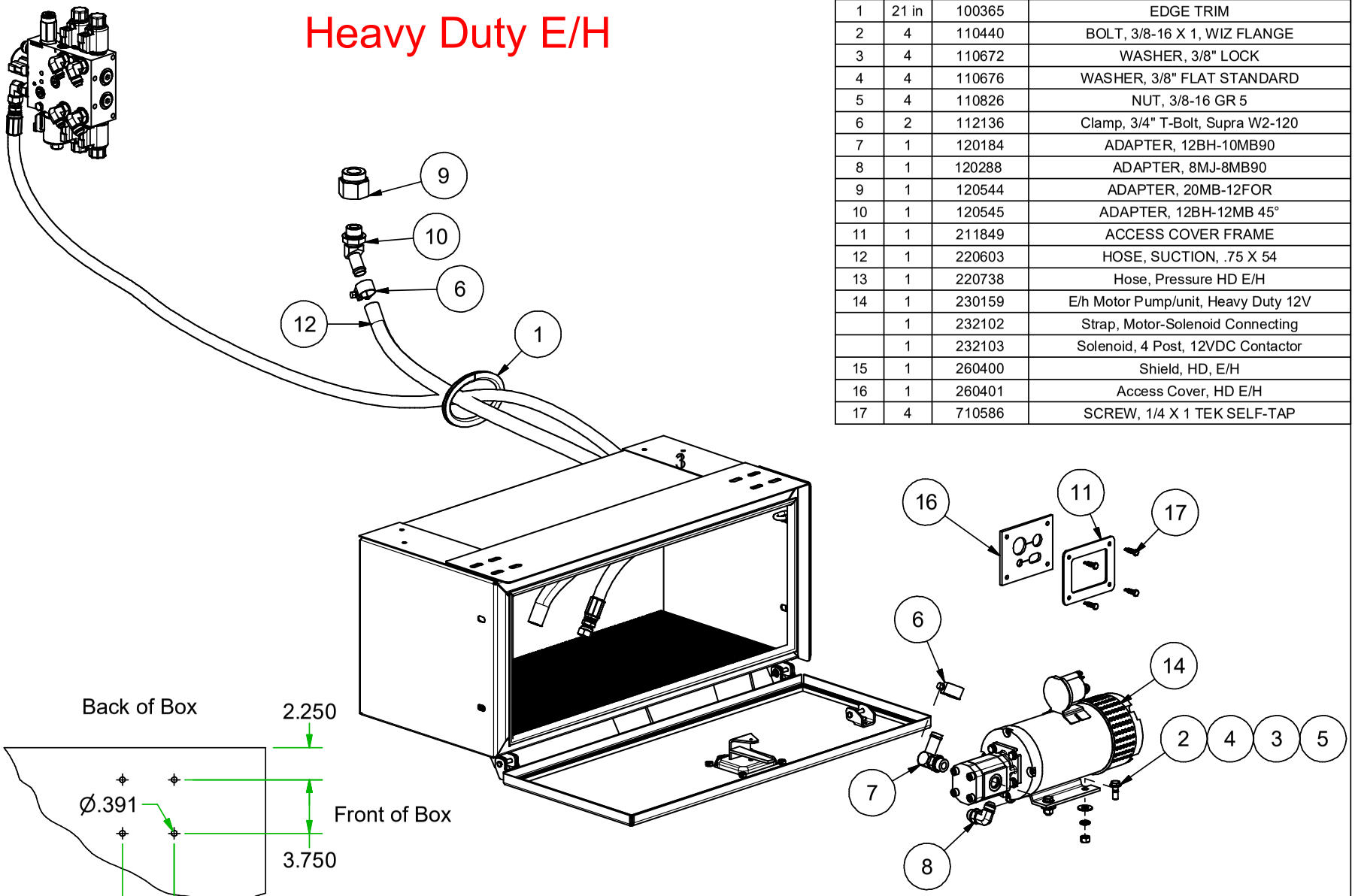


| Parts List | | | |
|---|---|---|---|
| ITEM | QTY | PART # | DESCRIPTION |
| 1 | 21 in | 100365 | EDGE TRIM |
| 2 | 4 | 110440 | BOLT, 3/8-16 X 1, WIZ FLANGE |
| 3 | 4 | 110672 | WASHER, 3/8" LOCK |
| 4 | 4 | 110676 | WASHER, 3/8" FLAT STANDARD |
| 5 | 4 | 110826 | NUT, 3/8-16 GR 5 |
| 6 | 2 | 112136 | Clamp, 3/4" T-Bolt, Supra W2-120 |
| 7 | 1 | 120184 | ADAPTER, 12BH-10MB90 |
| 8 | 1 | 120288 | ADAPTER, 8MJ-8MB90 |
| 9 | 1 | 120544 | ADAPTER, 20MB-12FOR |
| 10 | 1 | 120545 | ADAPTER, 12BH-12MB 45° |
| 11 | 1 | 211849 | ACCESS COVER FRAME |
| 12 | 1 | 220603 | HOSE, SUCTION, .75 X 54 |
| 13 | 1 | 220738 | Hose, Pressure HD E/H |
| 14 | 1 | 230159 | E/h Motor Pump/unit, Heavy Duty 12V |
| | 1 | 232102 | Strap, Motor-Solenoid Connecting |
| | 1 | 232103 | Solenoid, 4 Post, 12VDC Contactor |
| 15 | 1 | 260400 | Shield, HD, E/H |
| 16 | 1 | 260401 | Access Cover, HD E/H |
| 17 | 4 | 710586 | SCREW, 1/4 X 1 TEK SELF-TAP |

4/22/2020

| Heavy Duty E/H, W/Remote Part# 205115 | | | |
|---|---|---|---|
| ITEM | QTY | PART # | DESCRIPTION |
| 1 | 3 | 110119 | NUT, 10-24 LOCK |
| 2 | 1 | 110141 | NUT, M8 X 1.25 WIZFLANGE |
| 3 | 3 | 110264 | BOLT, 10-24 X .5 STAINLESS, PHILLIPS |
| 4 | 2 | 110538 | BOLT, 5/16-18 X 3.0 |
| 5 | 2 | 110606 | NUT, 5/16-18 WIZ FLANGE |
| 6 | 2 | 110753 | PLUG, 1/2" BUTTON PLASTIC |
| 7 | 2 | 120134 | ADAPTER, 6MJ-8MB90 |
| 8 | 1 | 120277 | ADAPTER, 8MJ-8MB |
| 9 | 2 | 120288 | ADAPTER, 8MJ-8MB90 |
| 10 | 1 | 120368 | ADAPTER, 8MJ-8FJX90 |
| 11 | 1 | 120493 | ADAPTER, 10MJ-8MB |
| 12 | 1 | 132001 | FUSE HOLDER, ATC, 14 GA., MINI |
| 13 | 1 | 132002 | FUSE, MINI 30 AMP |
| 14 | 2 | 132035 | SWITCH BOOT |
| 15 | 1 | 132044 | Switch, Spst, Rocker Led |
| 16 | 1 | 132092 | FUSE COVER, BUSS CFCOVER-1R |
| 17 | 1 | 132093 | FUSE HOLDER, BUSS CFBAR1-M8XSP |
| 18 | 2 | 132094 | FUSE 200 AMP, BUSS MRBF-200 |
| 19 | 2 | 132127 | Switch, Toggle, DPDT, (On)-OFF-(ON) |
| 20 | 1 | 202003 | DECAL, SWITCH IDENTIFICATION |
| 21 | 1 | 202052 | Decal, Double Poppet Valve |
| 22 | 1 | 202053 | Decal, Wiring Diagram, Double Poppet Deutsch |
| 23 | 1 | 223044 | Flatbed Valve, Small, Monoblock Ver II |
| 24 | 1 | 230155 | BATTERY CABLE, 2GA TWIN LEAD, 186" |
| 25 | 1 | 232098 | Harness, Flatbed, Double Poppet Deutsch |
| 26 | 1 | 232115 | Harness, Flatbed Valve, E/H Control |
| 27 | 1 | 233003 | Transmitter & Receiver, Kar-Tech |

Mini Relay SPDT 12V
530111

# Heavy Duty E/H Kit
# W/ Remote

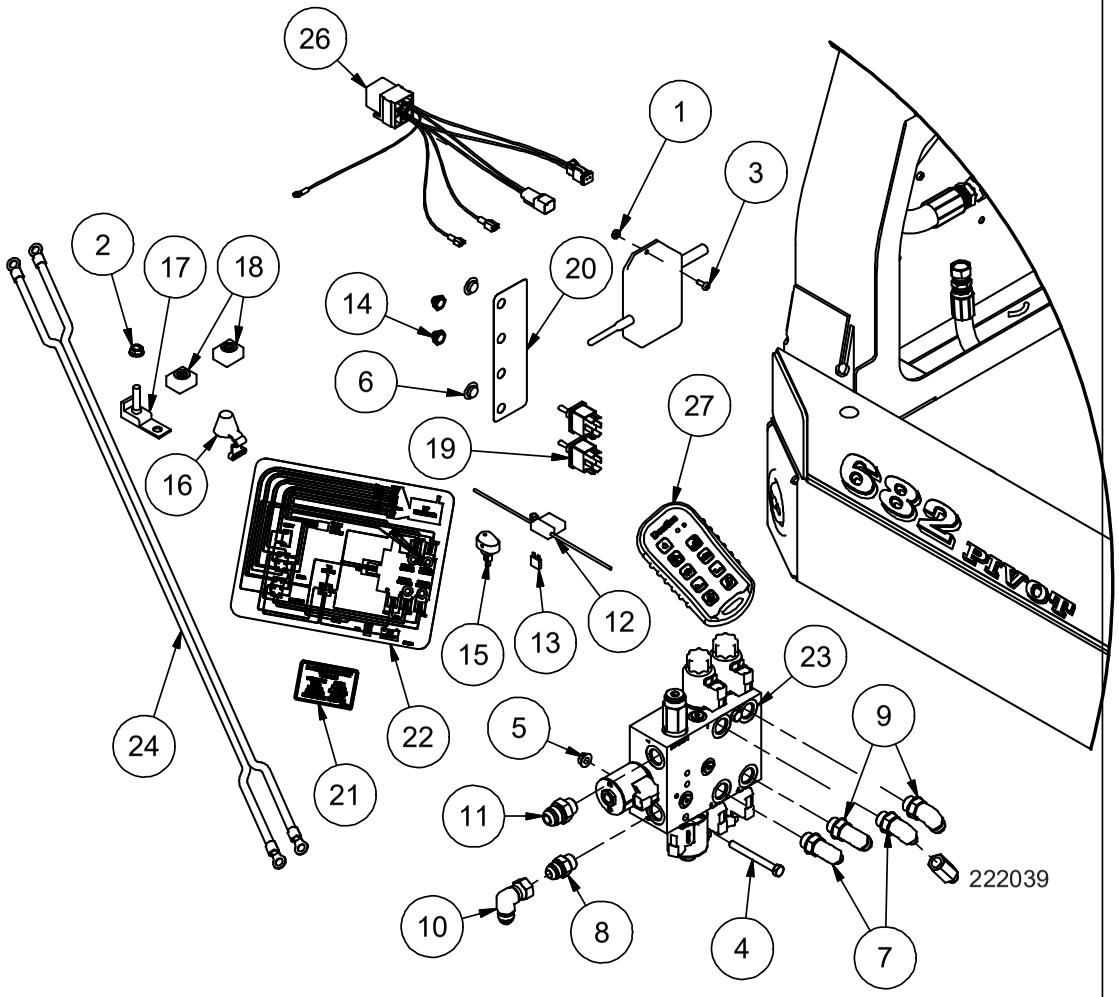


4/22/2020

| Heavy Duty E/H, W/Hand Control Part# 205116 | | | |
|---|---|---|---|
| ITEM | QTY | PART # | DESCRIPTION |
| 1 | 3 | 110119 | NUT, 10-24 LOCK |
| 2 | 1 | 110141 | NUT, M8 X 1.25 WIZFLANGE |
| 3 | 3 | 110264 | BOLT, 10-24 X .5 STAINLESS, PHILLIPS |
| 4 | 2 | 110538 | BOLT, 5/16-18 X 3.0 |
| 5 | 2 | 110606 | NUT, 5/16-18 WIZ FLANGE |
| 6 | 2 | 110753 | PLUG, 1/2" BUTTON PLASTIC |
| 7 | 2 | 120134 | ADAPTER, 6MJ-8MB90 |
| 8 | 1 | 120277 | ADAPTER, 8MJ-8MB |
| 9 | 3 | 120288 | ADAPTER, 8MJ-8MB90 |
| 10 | 1 | 120368 | ADAPTER, 8MJ-8FJX90 |
| 11 | 1 | 120493 | ADAPTER, 10MJ-8MB |
| 12 | 1 | 132001 | FUSE HOLDER, ATC, 14 GA., MINI |
| 13 | 1 | 132002 | FUSE, MINI 30 AMP |
| 14 | 2 | 132035 | SWITCH BOOT |
| 15 | 1 | 132044 | Switch, Spst, Rocker Led |
| 16 | 1 | 132092 | FUSE COVER, BUSS CFCOVER-1R |
| 17 | 1 | 132093 | FUSE HOLDER, BUSS CFBAR1-M8XSP |
| 18 | 2 | 132094 | FUSE 200 AMP, BUSS MRBF-200 |
| 19 | 2 | 132127 | Switch, Toggle, DPDT, (On)-OFF-(ON) |
| 20 | 1 | 150044 | Hand Control & Cable Assy, 2 Bank |
| 21 | 1 | 202003 | DECAL, SWITCH IDENTIFICATION |
| 22 | 1 | 202052 | Decal, Double Poppet Valve |
| 23 | 1 | 202053 | Decal, Wiring Diagram, Double Poppet Deutsch |
| 24 | 1 | 223044 | Flatbed Valve, Small, Monoblock Ver II |
| 25 | 1 | 230155 | BATTERY CABLE, 2GA TWIN LEAD, 186" |
| 26 | 1 | 232098 | Harness, Flatbed, Double Poppet Deutsch |
| 27 | 1 | 232105 | Harness, Adapter 2 Bank, Hand Control |
| 28 | 1 | 232115 | Harness, Flatbed Valve, E/H Control |

Mini Relay SPDT 12V
530111

# Heavy Duty E/H Kit W/ Hand Control

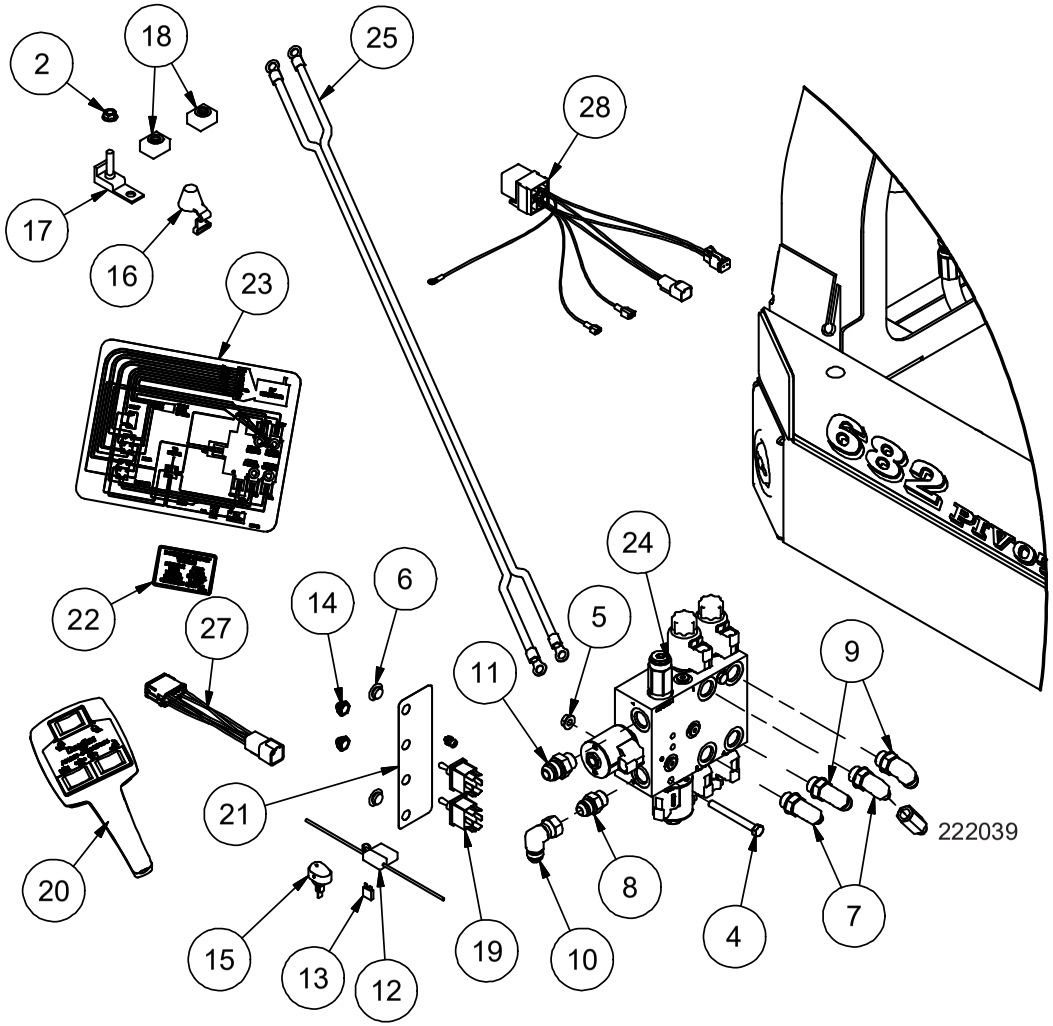


4/22/2020

# Flatbed Valve -08 Hydac Deutsch Service Parts

| Flatbed Valve, Small, Hydac Deutsch P/N 223044 | | | |
|---|---|---|---|
| ITEM | QTY | PART # | DESCRIPTION |
| 1 | 3 | 120062 | O-Ring Plug, #4 7/16-20 |
| 2 | 1 | 222004 | Valve, Pressure Relief |
| 3 | 4 | 222010 | Cartridge, #8 HYDAC Double Poppet |
| 4 | 1 | 222045 | #10 SOLENOID, 2 POSITION 4 WAY |
| 5 | 4 | 222059 | Coil, #8 Hydac, DT04-2P Suppressed |
| 6 | 2 | 720164 | O-Ring Plug, #8 3/4-16 |
| 7 | 1 | 820232 | Spool, #10 Valve |
| 8 | 2 | 922119 | Coil, #10 Hydraforce, DT04-2P Suppressed |

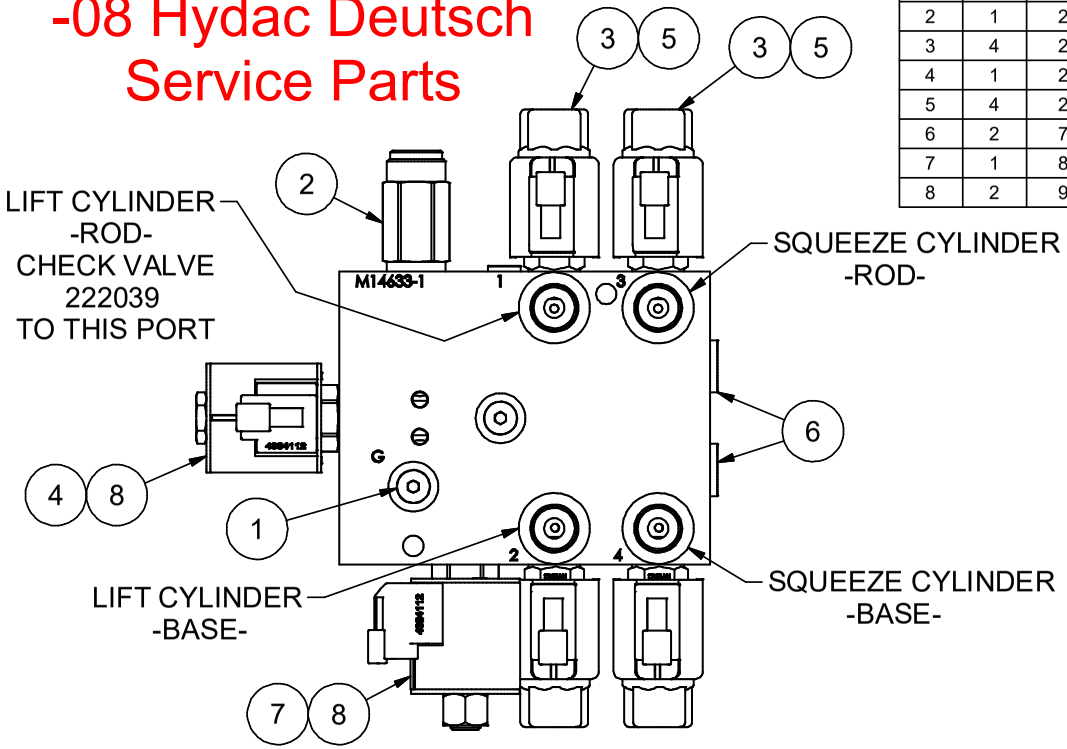


# Heavy Duty E/H Motor & Pump

| 230159 E/H MOTOR & PUMP, HD 12V | | | |
|---|---|---|---|
| ITEM | QTY | PART # | DESCRIPTION |
| 1 | 1 | 232102 | Strap, Motor-Solenoid Connecting |
| 2 | 1 | 232103 | Solenoid, 4 Post, 12VDC Contactor |

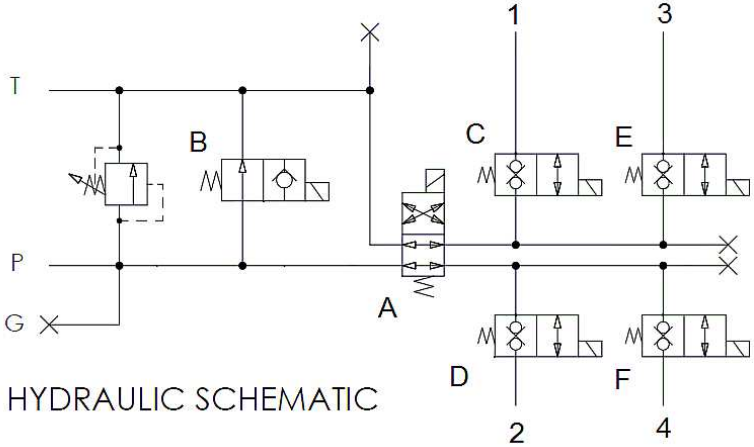


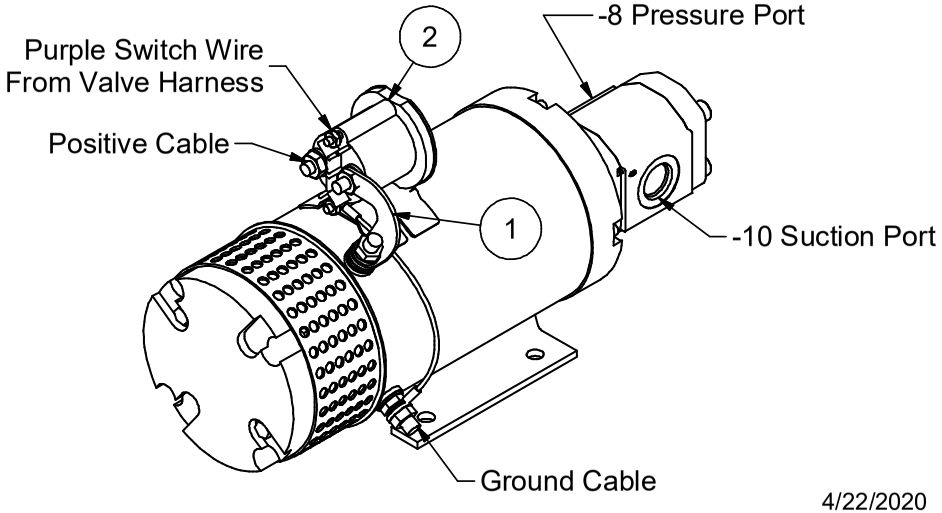


4/22/2020

# Controlling E/H Solenoid From Flatbed Harness

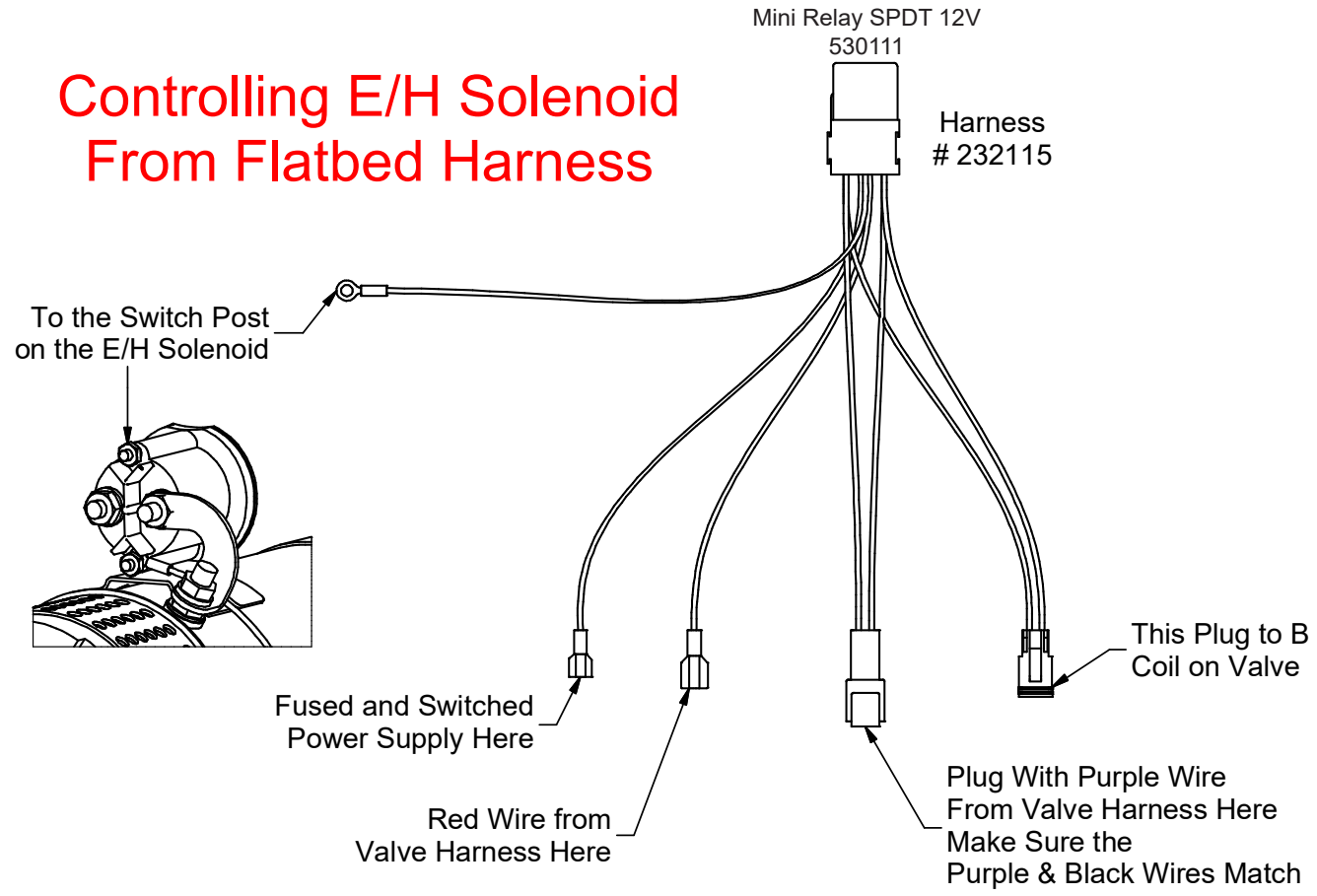


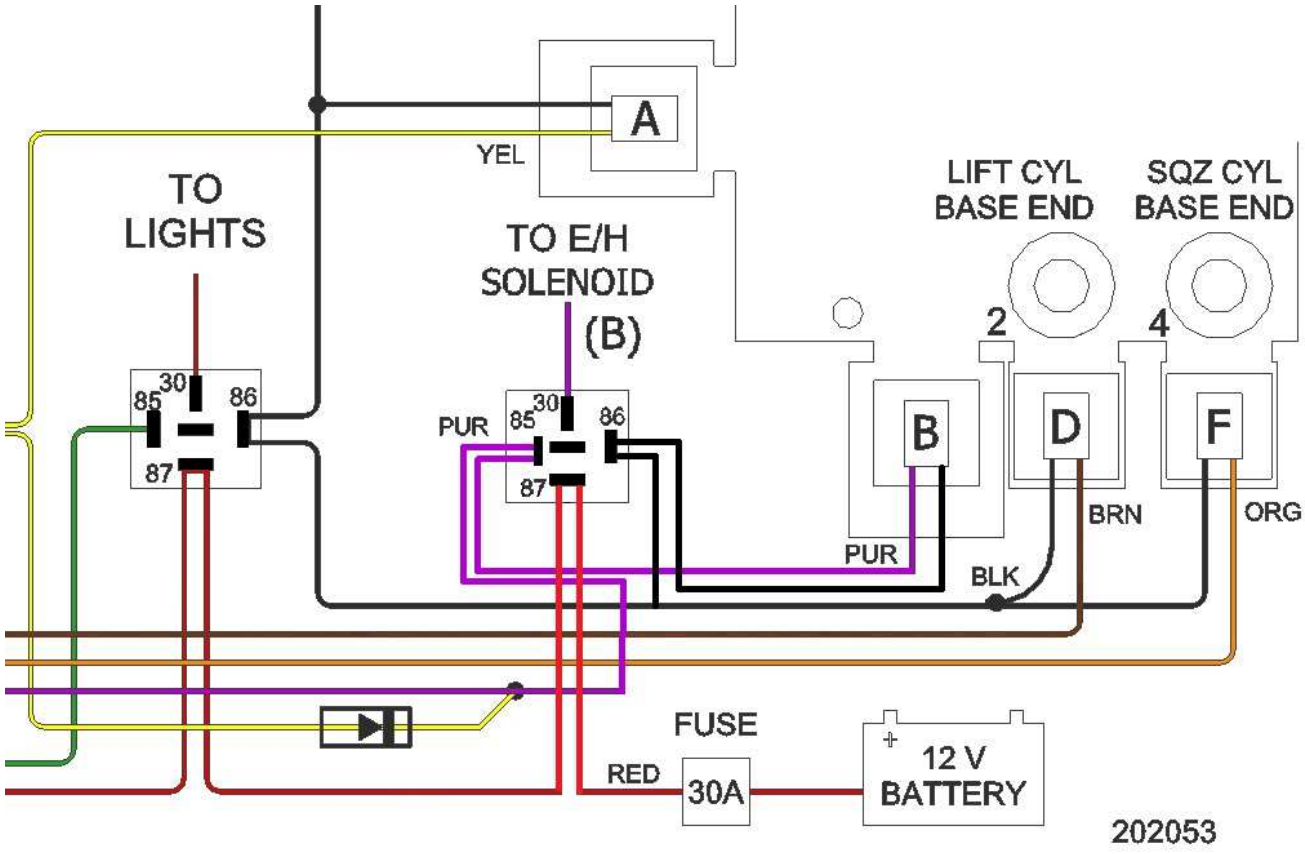


4/22/2020

# 2 Bank Wiring, Kar-Tech Remote

## Gen 3 Double Poppet, Deutsch

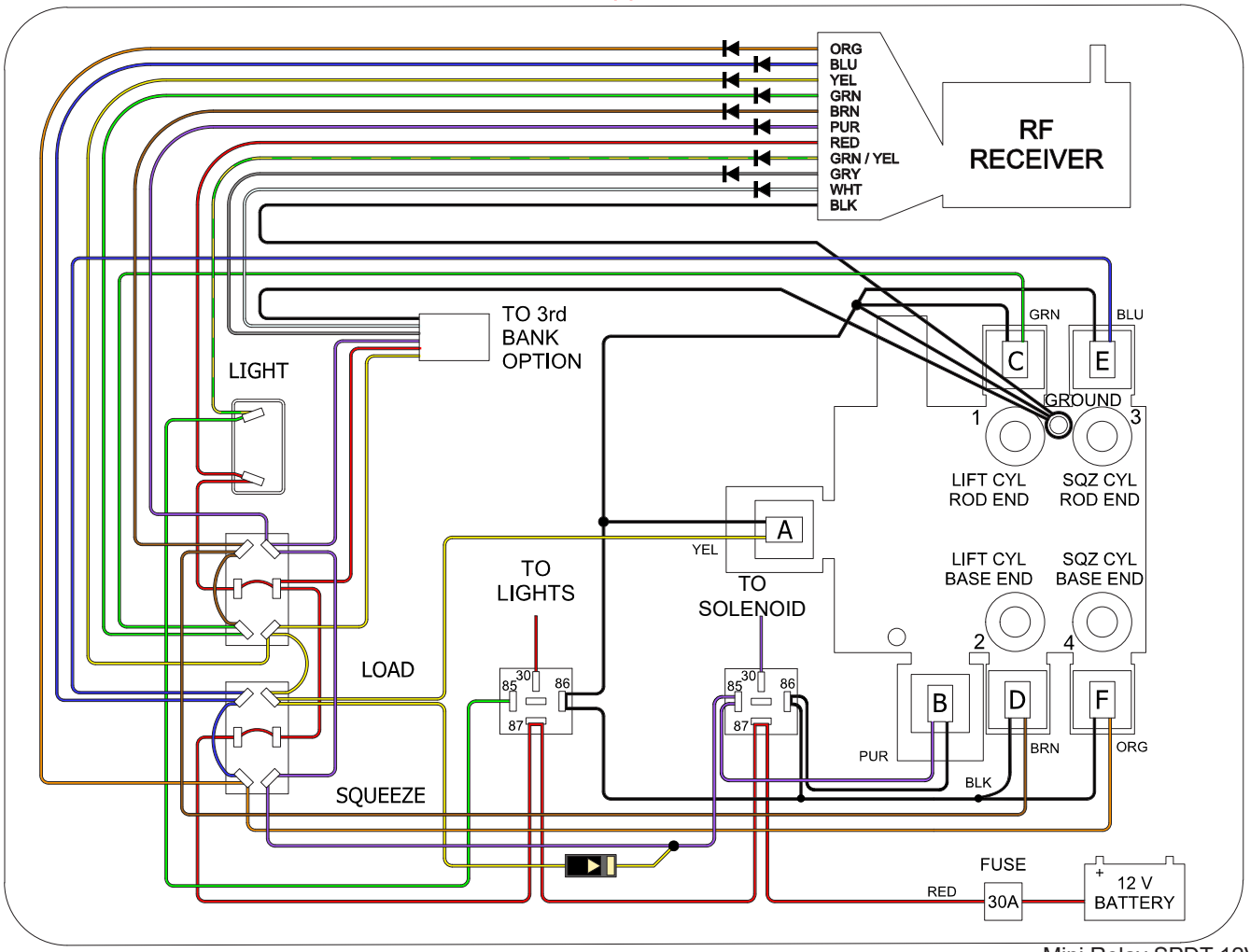


Decal Part# 202053 Harness Part# 232098 Mini Relay SPDT 12V 530111

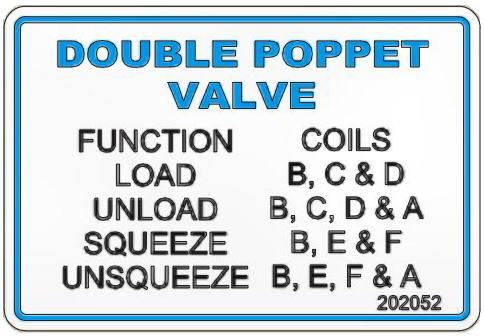


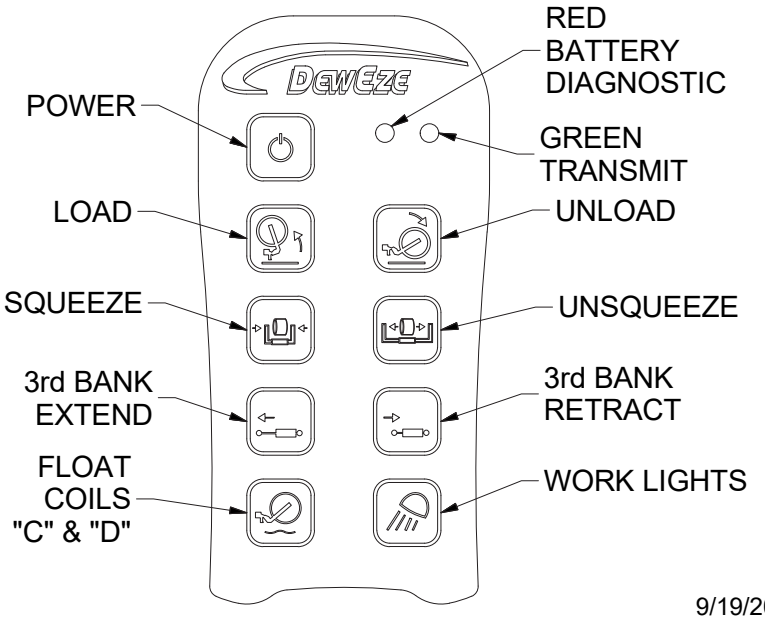


PAGE 1 OF 2

9/19/2014

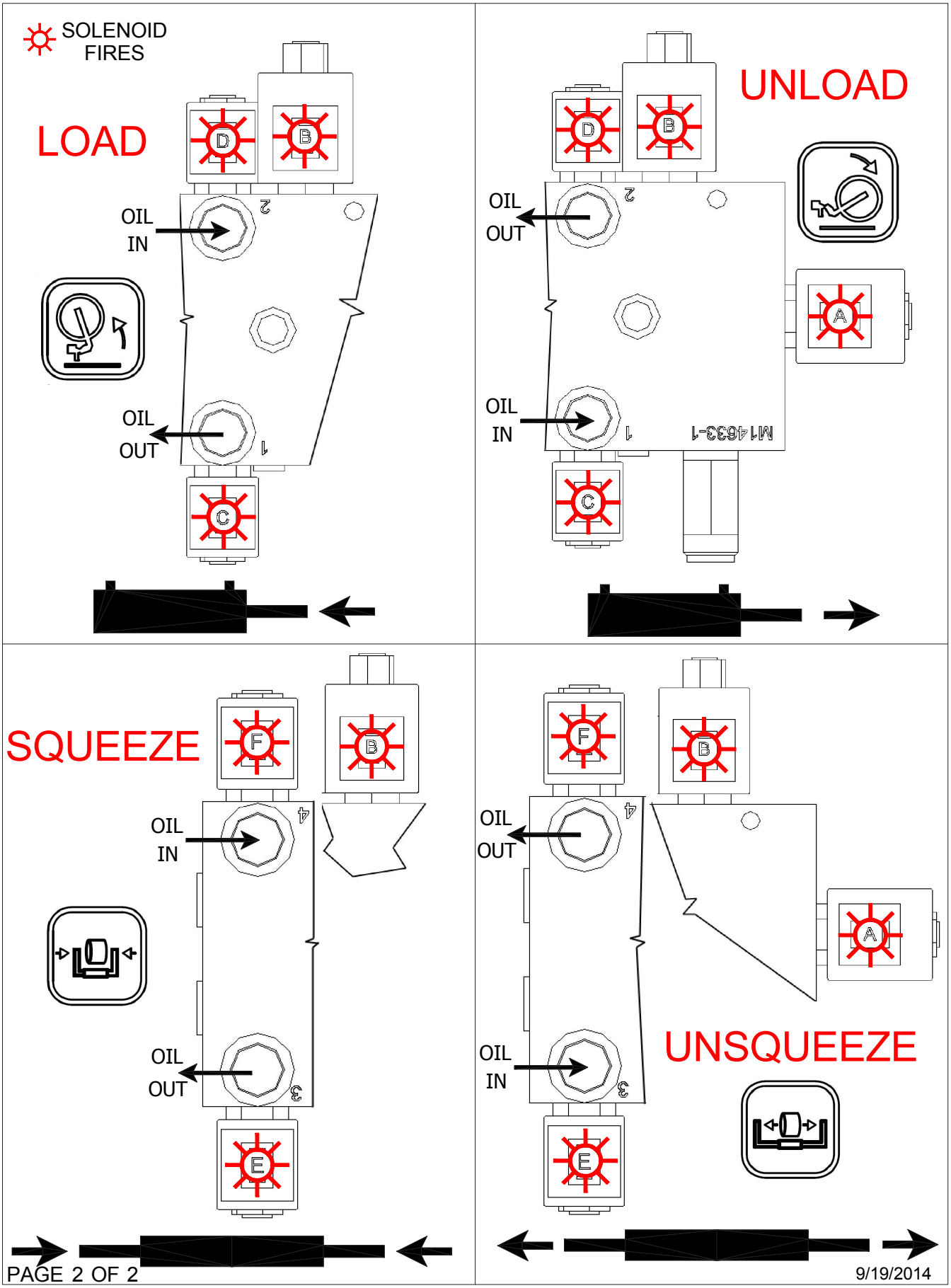
SOLENOID FIRES
LOAD
OIL IN
OIL OUT
UNLOAD
OIL OUT
OIL IN
M14633-1
SQUEEZE
OIL IN
OIL OUT
UNSQUEEZE
OIL OUT
OIL IN
PAGE 2 OF 2
9/19/2014

# 3rd Bank Wiring, Kar-Tech Remote

Gen 3 Double Poppet, Deutsch

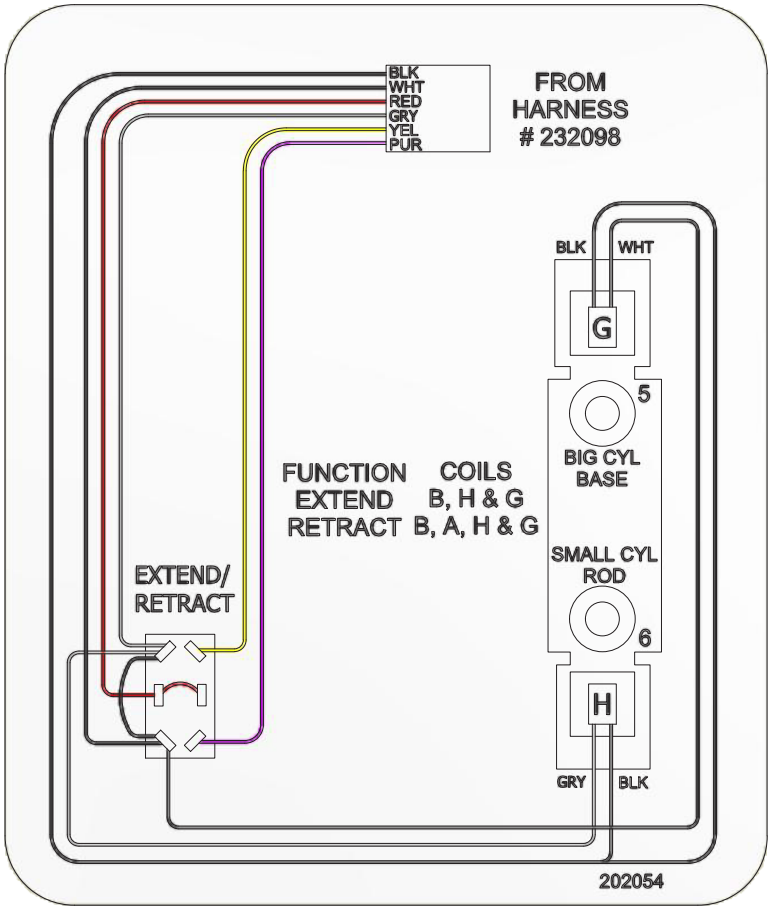


Decal Part# 202054 Harness Part# 232099

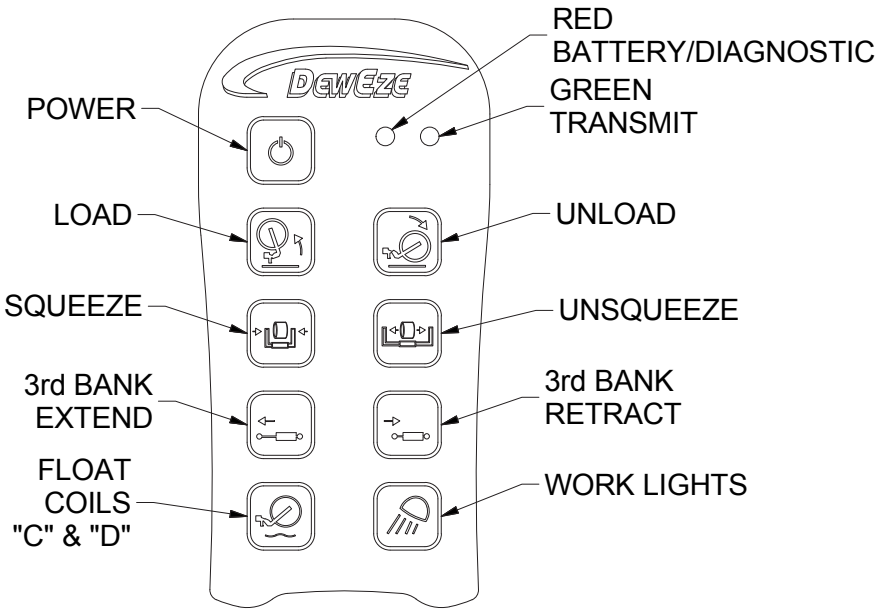


9/19/2014

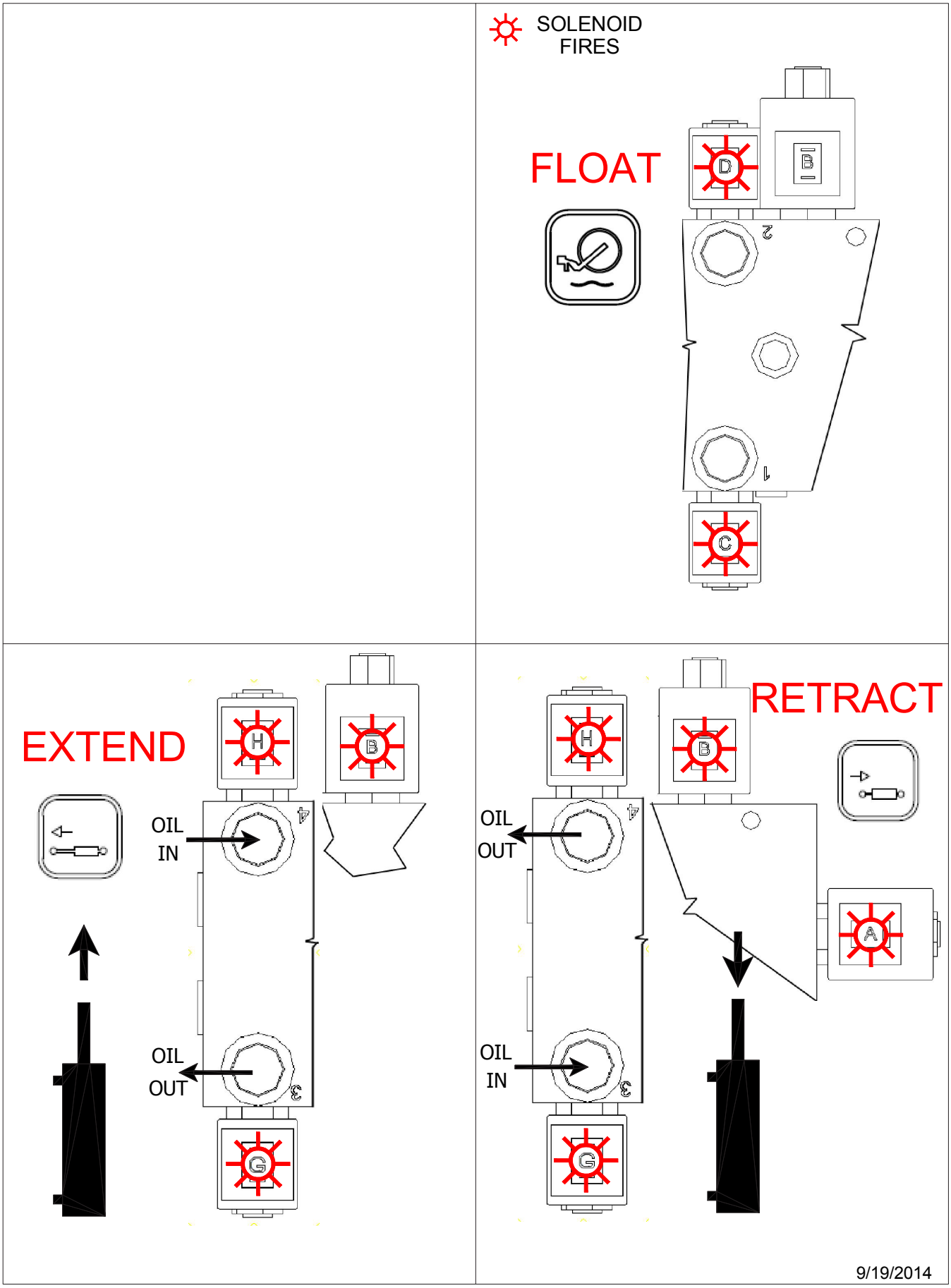
SOLENOID FIRES
FLOAT
D
B
C
2
1
EXTEND
H
B
G
4
3
OIL IN
OIL OUT
RETRACT
H
B
A
G
4
3
OIL OUT
OIL IN
9/19/2014

# XRM Adapter Update

## Kit # 205068

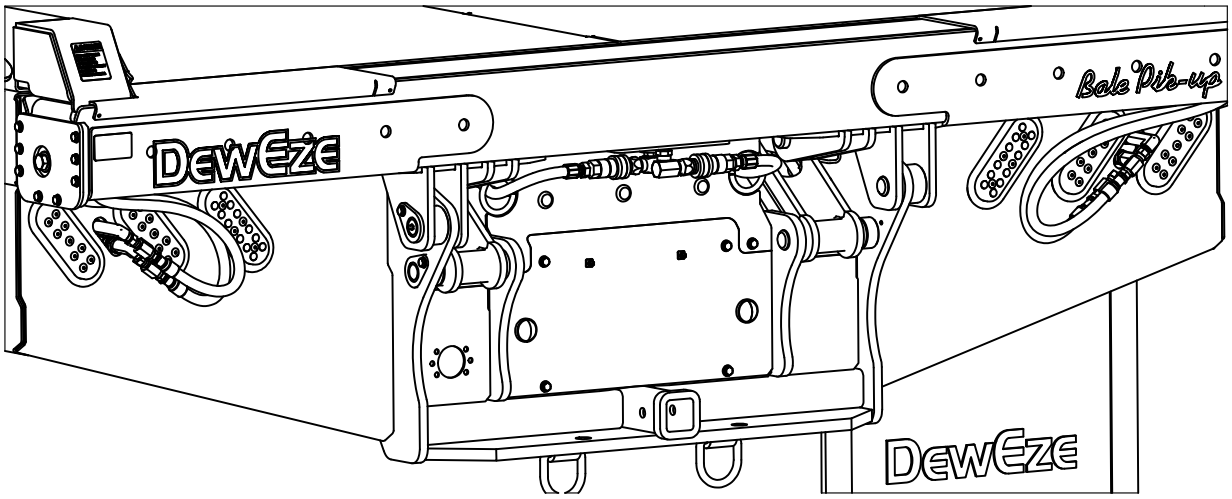


| Parts List | | | |
|---|---|---|---|
| ITEM | QTY | PART # | DESCRIPTION |
| 1 | 6 | 100578 | Cable Tie 14" Black 50 Lb Tens |
| 2 | 4 | 120123 | ADAPTER, 6FP-6FJX |
| 3 | 2 | 120271 | ADAPTER, 6MP-6FPX |
| 4 | 2 | 120596 | ADAPTER, 6MJ-6MP LONG 90 |
| 5 | 2 | 120597 | ADAPTER, 6MJ-6MP XX-LONG 90 |

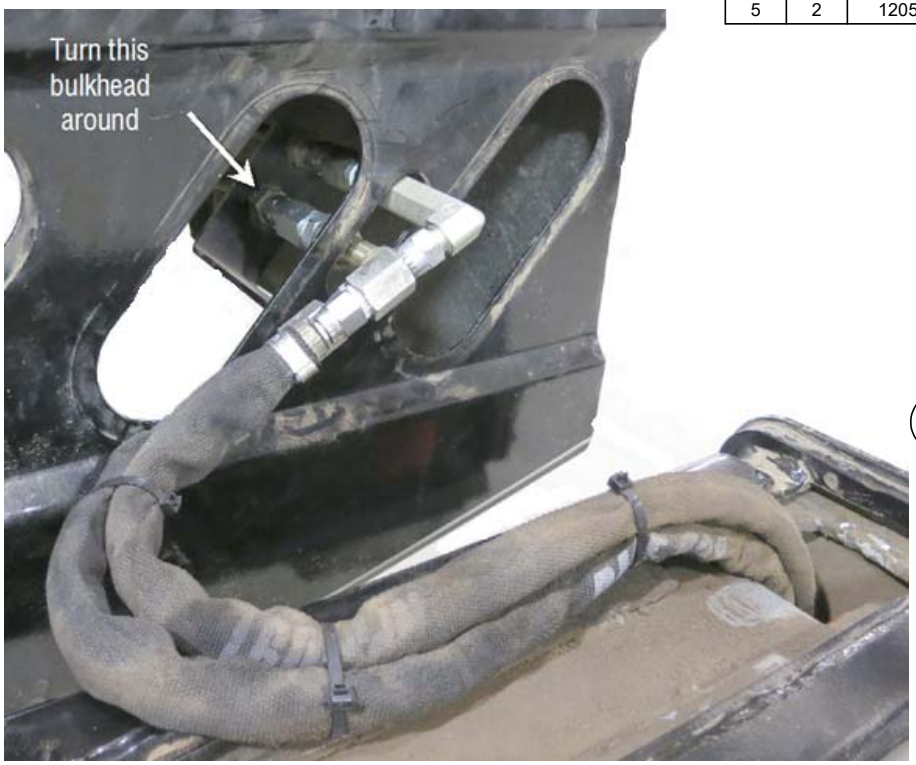


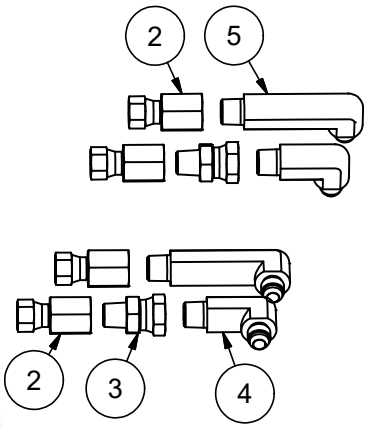


5/11/2012

## NOTES

Harper Industries, Inc.
151 E. Highway 160
Harper, KS 67058

Telephone: 620-896-7381
Toll-Free: 800-835-1042
Fax: 620-896-7129

Website: www.harperindustries.com

E-mail: info@harperindustries.com