800/900 SERIES

Serial Number: 24
Part#: 201001

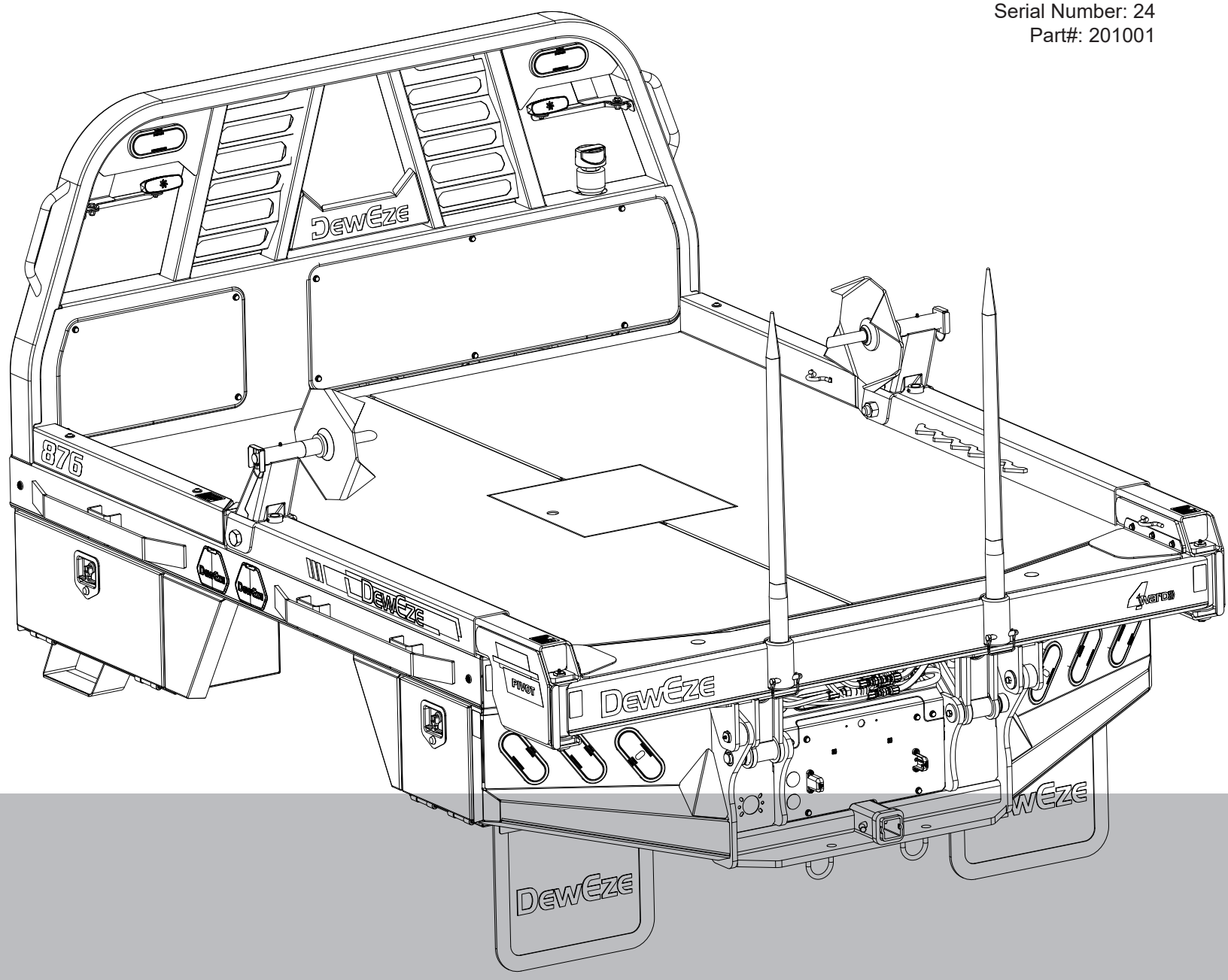

DewEze®

11-2026

HARPER INDUSTRIES INC

Thank you for purchasing a DewEze Flatbed.

TO THE OWNER OR OPERATOR:

As with all Harper products, the 800 and 900 Series Flatbeds have been thoroughly tested and built to provide a sturdy, dependable product. The Flatbed is equipped with live hydraulics, which allows it to be used for a wide range of lifting and hauling tasks. This manual is written as an aid to operating and maintaining the DewEze Flatbed. Read and understand the manual thoroughly before operation to avoid damage to the unit or injury to the operator or bystanders.

A Flatbed can present hazards to an operator who follows unsafe procedures in either the operation or maintenance of the unit. Therefore, **SAFETY WARNINGS** are present at certain locations in the text. Harper Industries is not responsible for accidents or injuries that result from the misuse or lack of maintenance of the Flatbed.

SYMBOL:  **SAFETY WARNING!** 

MEANING: Failure to understand and obey this warning may result in injury to you or others. Whenever this symbol is used, please pay very close attention to the information presented, and make sure you fully understand. If you do not, contact your dealer or Harper Industries for clarification.

HARPER INDUSTRIES, INC.
151 E. HWY. 160 Harper, KS 67058
(620) 896-7381 • **Fax** (620) 896-7129
Toll Free 800-835-1042
Email info@deweze.com
Website www.deweze.com

© 2026 Harper Industries, Inc.
The Harper and DewEze names and the logo are registered trademarks of Harper Industries, Inc. All other brand and product names are trademarks or registered trademarks of their respective companies.

Statement of Warranty 1/11/2025

Harper Industries, Inc. (HII) warrants to each purchaser of new DewEze Truck Bodies from an authorized dealer or representative, that such equipment is free of manufacturer's defects in workmanship and materials which appear while in normal service for a period of TWO YEARS commencing with delivery to the original user. The Flatbed hydraulic and electrical systems are warranted for a period of ONE YEAR.

The obligation of HII under this warranty is expressly limited, at our option, to replacement or repair at a service facility designated by Harper Industries or at the manufacturing plant in Harper, KS. A part will be replaced after inspection discloses it to have been defective. This warranty does not apply to defects caused by damage or unreasonable use (including failure to provide reasonable and necessary maintenance, or by performing functions without genuine DewEze Flatbed accessories) while in the possession of the consumer.

Warranty is limited to parts, labor and ground freight delivery of replacement parts. HII shall not be liable for the consequential damages of any kind, including but not limited to consequential labor costs or transportation charges in connection with replacement or repair of defective parts.

This warranty does not apply to parts subjected to misuse, abuse, alteration, improper or inadequate maintenance, or normal wear (including belts, battery, chains, filters).

ANY IMPLIED OR STATUTORY WARRANTIES, INCLUDING ANY WARRANTY OR MERCHANTABILITY OR FITNESS FOR A PARTICULAR PURPOSE, ARE EXPRESSLY LIMITED TO THE DURATION OF THIS WRITTEN WARRANTY. HII makes no other express warranty, nor is anyone authorized to make any on behalf of HII.

For further information please contact your nearest DewEze dealer.

RECORDS

Date of Purchase _____ / _____ / _____

Dealer's Name _____

Dealer's Phone _____

Serial Number Bed____ _____

Serial Number Pump_ _____

Table of Contents

OPERATOR SECTION

To the Owner or Operator..... 1
Warranty Statement..... 2
Table of Contents..... 3
Specifications
- Bed Model Chart..... 4
- Toolboxes, Skirts..... 4
- Hydraulic System Specs..... 5

Feature Identification..... 6-7
Safety Guidelines
- General Equipment Safety..... 7
- Flatbed Operation Safety..... 7
- Decal Identification..... 8
- Hydraulic Safety..... 9
- Intitial Startup Procedure..... 9

Operating Instructions
- Remote Control Transmitter..... 9
- Beginning Operation..... 10
- Loading..... 10
- Extending (option)..... 10
- Unloading..... 10
- Unrolling..... 10
- Spike/Arm Feature..... 10
- Storing the arms..... 11
- Turning System Off..... 11

Maintenance
- Check Daily or Before Use..... 11
- Lubrication..... 11
- Troubleshooting..... 12

Appendix I
- GatorHyde Repair..... 13

Appendix II
- Remote Transmitter/Receiver Synching.....14-15

Appendix III
- E/H Installation.....16-17

PARTS SECTION
- Dummy Arms..... 20

800 Arms, Crosstubes, Cylinders & Hoses
- 800 Pivot & Pivot Spike..... 21
- 800 XRM Pivot & Pivot Spike..... 22
- 800 XRM Cylinders & Hydraulics..... 23
- 800 Parallel..... 24
- 800 Parallel XRM..... 25

900 Arms, Crosstubes, Cylinders & Hoses
- 900 Pivot & Pivot Spike..... 26
- 900 XRM Pivot & Pivot Spike..... 27
- 900 XRM Cylinders & Hydraulics..... 28
- 900 Parallel..... 29
- 900 Parallel XRM..... 30

800/900 Common Cylinders
- Lift Cylinders & Linkage..... 31
- Squeeze Cylinders..... 32

Hose Routings
- Pivot Hose Routing & Parts..... 33
- Pivot XRM Hose Routing & Parts..... 34
- Parallel Hose Routing & Parts..... 35
- Parallel XRM Hose Routing & Parts..... 36
- 3rd Bank Routing Options..... 37

Hydraulic System Components
- Non-Proportional Hydraulic Schematic..... 38
- Valve & 3rd Bank.....39-40
- Reservoir & Filter.....41-42

Electrical Components
- Valve Switches..... 43
- Electrical Harness Routing and Adapters.....44-47
- Controls Wireless & Corded.....48-49

E/H HD and Hybrid
- Kits and Components..... 50
- Hybrid Instructions..... 51
- E/H Install & Wiring Guides.....52-53

800/900 Common Parts and Options
- Lights.....54-55
- Headache Rack Covers & Components..... 56
- Ball Well & Hitch Pin..... 57
- Decals..... 58
- Spike Components & Rear Panel Assy..... 59
- Spinners..... 60
- Risers..... 61
- Lift Bars..... 61
- Skirt Selection Details..... 62-63
- Toolbox Selection Details..... 64-65
- Toolbox Install Kits..... 66
- Mudflaps..... 66
- Mounting Kits, Rear View Camera..... 67
- Mounting Kits, Bed..... 68
- Bed Stringer Measurements..... 69

Specifications

DewEze flatbeds are specifically designed to transport and feed round hay bales.

MODEL SPECS

BED MODEL	870	871	876	879	976	984	988
REAR WHEELS	Single	Single	Single	Single	Dual	Dual	Dual
DIMENSIONS	7’1” x 7’2”	7’1” x 7’7”	7’1” x 8’11”	7’1” x 9’10”	8’ x 8’11”	8’ x 9’10”	8’ x 11’10”
CAB-TO-AXLE	37”	40-42”	56-58”	60”	56-58”	60”	84”
TRUCK BRAND	Ram	GM/Ford	All	Ford/Ram	All	All	All
SETUP CODE	Box Removal	Box Removal	Box Removal	Cab/Chassis	Box Removal	Cab/Chassis	Cab/Chassis

**Length of all flatbeds includes 6” for crosstube*

Bed Model	Single	Dual	Box Remove	Cab-Chasis	Truck Frame Length	Notes
870	X		X		6'10"	Ram
871	X		X		7'3"	Ford/GM
876	X		X		8'7"	Ford/Ram/GM
879	X			X	9'4"	Ford/Ram
976		X	X		8'7"	Ford/Ram/GM
984		X		X	9'4"	Ford/Ram/GM
988		X		X	11'6"	Ford/Ram/GM

TOOLBOX SELECTION CHART

Details on pg. 64

BED MODELS	FRONT TOOLBOX	REAR TOOLBOX	
	ALL BEDS	PIVOT	PARALLEL
870	14.5”	14.5”	18”
871	18”	14.5”	18”
876	30”	14.5”	18”
879	30”	18”	24”
976	30”	14.5”	18”
984	30”	18”	24”
988	30”	18”	24”

**Front toolbox dimensions are the same across all pivot & parallel beds.*

TOOLBOX P/N’S

TOOLBOX	PART #
14.5”	263003
18”	263004
24”	263002
30”	263001

SKIRT KIT P/N SELECTION CHART

Details on pg. 62

BED MODELS	FRONT (w/TBX)	REAR (w/TBX)		REAR (no/TBX)	
	ALL BEDS	PIVOT	PARALLEL	PIVOT	PARALLEL
870	264049	264049	264062	264047	264053
871	264049	264049	264062	264047	264053
876	264062	264049	264062	264047	264053
879	264062	264062	264062	264053	264054
976	264062	264049	264062	264047	264053
984	264062	264062	264062	264053	264054
988	264088	264062	264062	264053	264054
988 x2 30” TBX	264049	264062	264062	264053	264054

Hydraulic System Specifications

HYDRAULIC	Engine driven pump or self-contained battery powered E/H unit
SYSTEM PRESSURE	2700 psi
OIL RESERVOIR CAPACITY	4.25 gallons
OIL SYSTEM	2.75-3.75 gallon (dependent on truck/bed length or XRM option)
OIL FILTER	Deweze 720043 (10 micron)
CYLINDER, LIFT (2)	3.50” x 16.62”
PARALLEL CYLINDER, SQUEEZE	2.00” x 34.00” (870, 871, 876, & 879) 2.00” x 39.25” (976, 984, & 988)
PIVOT CYLINDER, SQUEEZE	3.00” x 5.00” 3.25” x 5.00” Rephasing
CYLINDER, EXTENDABLE*	2.00” x 20.0” (left side)
CYLINDER, EXTENDABLE*	2.50” x 20.0” (right side)

*** Cylinders used for extendable arms are optional.**

Protective Coating

PAINT	Urethane primer and topcoat
GATORHYDE	Long-lasting, textured polyurea surface

DewEze Bale Bed Hydraulics

Hydraulic Oil Recommendations For Clutch Pump Systems

Based on Ambient Temperature

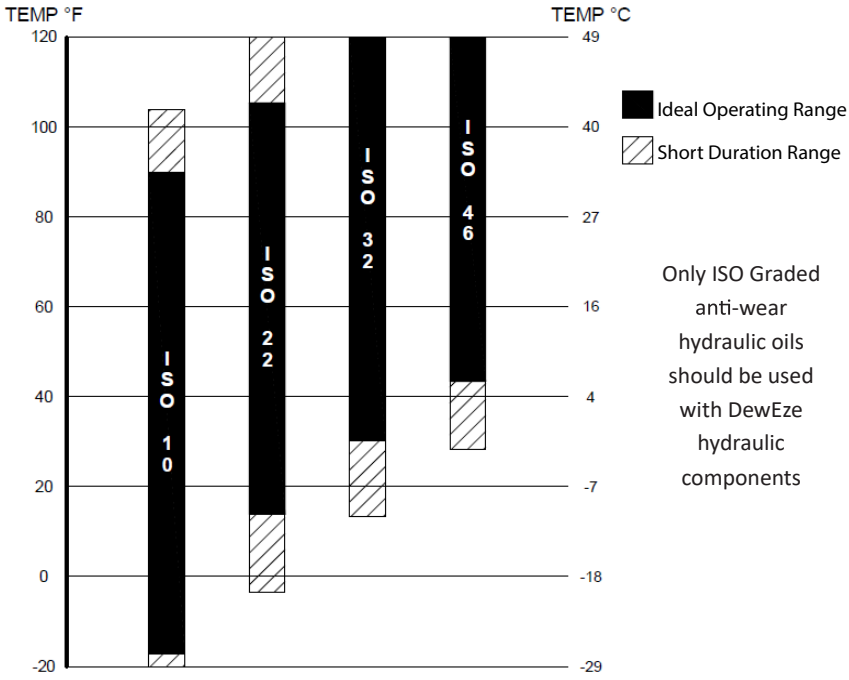

Only ISO Graded anti-wear hydraulic oils should be used with DewEze hydraulic components

Application Notes:

Reduce the oil viscosity by one grade in electric drive systems to prevent oil overheating.

For continuous operation (i.e. augers) in summer, consider using one grade higher oil viscosity.

Recommendations are only within normal operating conditions – any special application of the hydraulic system will require consideration of oil operating temperatures

Hydraulic Oil

- Fluid selection will affect hydraulic system performance.
- Consult your local oil supplier for help selecting fluid appropriate for your area. Consideration must be given between clutch pump or E/H.
- Change hydraulic oil filter after the first 40 hours, then every 250 hours or annually.
- Change contaminated or milky oil.
- Mixing fluids may cause foaming or viscosity issues.

Hydraulic System

- Replace quick-coupler o-rings if leaking.
- Heat 190° or greater may damage hydraulics. Hot spots may indicate a problem.
- Run the bed at least twice a month to prevent valve condensation
- For easy hookup of the couplers, turn the pump off leaving the valve and ignition on. Actuate function switches (squeeze/3rd bank) to relieve pressure.

Feature Identification

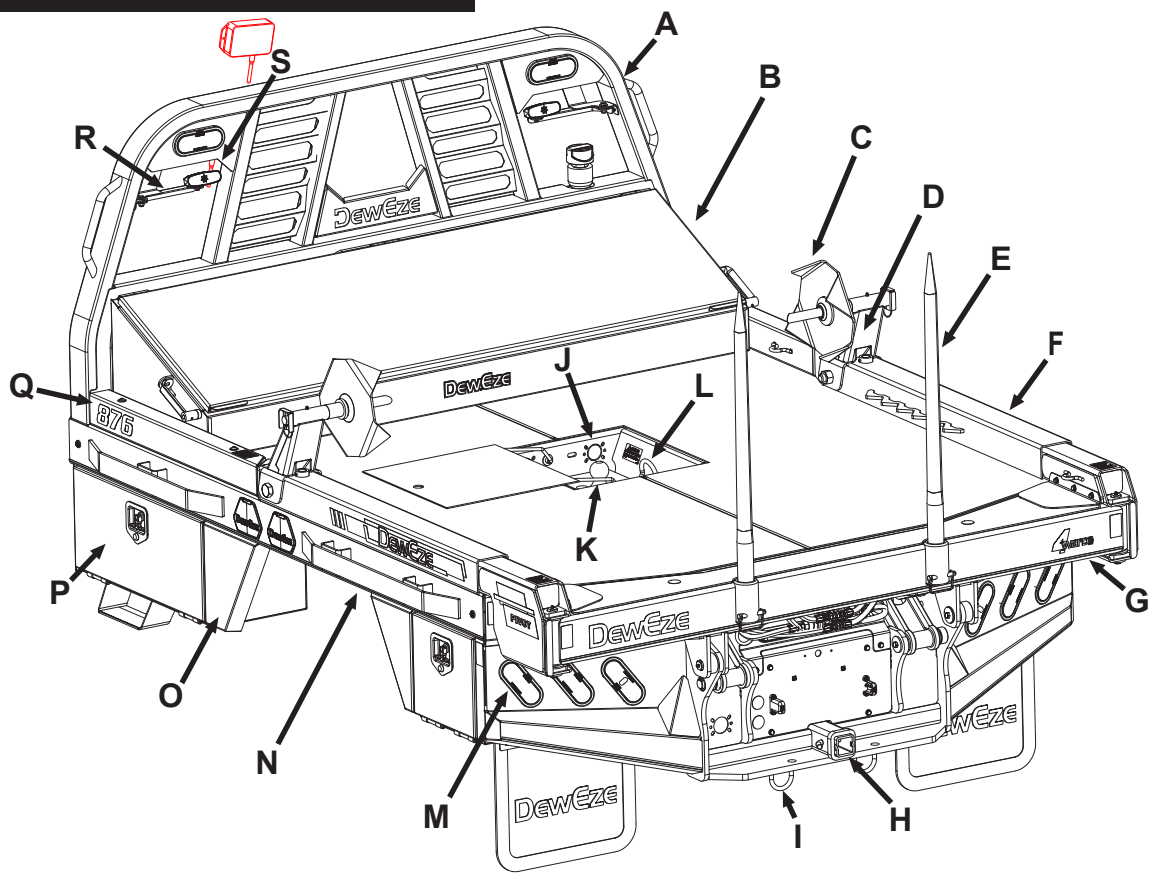

A. Headache Rack - Protects the rear pickup window. The hydraulic oil tank and valve are located in the headache rack.

B. Across-the-Bed Toolbox (optional) - Has a shelf mounted inside. Toolbox is 78” wide, 15.5” tall and 21.5” deep.

C & D. Spinners & Risers (optional) - Used to unroll hay. The risers allow the hugger arms to lie flat on the bed with the spinners attached.

E. Spikes (optional for pivot beds) - Used for quick lifting of a bale for transport.

F. Hugger Arms - Squeeze together to grip the bale and lift it onto the flatbed. When the arms are stored they serve as side rails for the flatbed.

G. Crosstube - Houses the squeeze cylinder and guides the hugger arms.

H. Hitch Plate - 2.5” with a 2” adapter. Has holes for hitch pins.

I. Safety Chain Loops - Always use safety chains when towing.

J. Trailer Plug Knockout - Available space to install trailer plug in the ball well.

K. Gooseneck Hitch - Located under a cover plate in the middle of the bed.

L. Safety Chain Loops - Always use safety chains when towing.

M. Lights - LED lighting for stop-tail-turn has long life and low current draw.

N. Rub Rails (optional) - Protect your straps.

O & P. Skirts & Toolboxes (optional) - Mount under front and/or rear of bed on both sides. The Electric/Hydraulic Power unit usually mounts inside the front passenger toolbox.

Q. Dummy Arms - Serve as side rail along with hugger arms.

R. Swing Lights (optional) - Lights can be pivoted out wider than the bale when working at night.

S. Wireless Receiver (optional) - Mounted near headache rack lights for better access and reception.

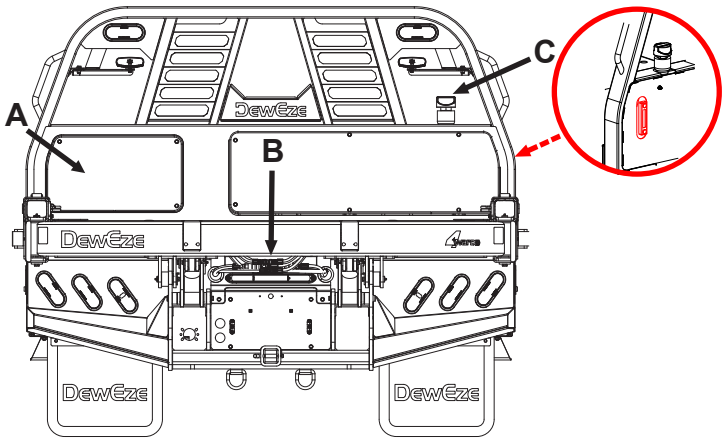

A. Valve Compartment – Houses the control valve.

B. Pioneer Couplers – Connect hydraulic hoses to the squeeze cylinder, may also be used to connect to implements.

C. Hydraulic Oil Fill & Sight Glass – Check hydraulic oil level with sight glass. The end of the graduated marks is "full". New installs fill to "full", run all functions, then re-fill to "full."

Safety

Operator safety is of utmost concern when designing and developing a new piece of equipment. Designers and manufacturers build in as many safety features as possible. Many accidents occur which could have been avoided by a few seconds of thought and a more careful approach to handling equipment. Most accidents can be avoided by observing the precautions in this section. To avoid personal injury, study the safety warnings and cautions listed in this manual and follow them.

General Equipment Safety

- This equipment can be dangerous to children and persons unfamiliar with its operation. Only responsible adults familiar with farm machinery and trained for this unit should operate it.
- Do not allow persons to operate or assemble this unit until they have read this manual and have developed a thorough understanding of the safety precautions and how the unit works.
- Do not attempt to operate equipment under the influence of drugs or alcohol.
- Review the safety warnings and cautions with all users annually. If you have any questions not answered in this manual or require additional copies, contact your dealer or Harper Industries.

Flatbed Operation Safety

- Ensure all safety pins are in place and flatbed mounting bolts are secure to the truck frame.
- Ensure hinges, joints, and sliding parts are well greased, especially during off season to prevent rusting and binding.
- Check with truck dealer for any load limits, additional suspension or tire requirements. The flatbed's lifting capability may exceed the truck's load capacity in some instances.
- Replace any CAUTION, WARNING, DANGER or instruction decal that is illegible or missing. Decals are available from your Deweze dealer.

SAFETY WARNING!

Raising the arms beyond center when cylinders aren't full will cause the arms to drop. Never load or unload with humans or livestock in the potential drop zone.

SAFETY WARNING!

Hydraulic fluid escaping under pressure can penetrate the skin and may cause death if not treated immediately.

SAFETY WARNING!

Operating hydraulics with air in the lines can cause injury and damage to machinery. Follow these procedures when first filling with fluid or after maintenance that could have caused air to enter the lines.

800/900 DECALS

SAFETY WARNING!

It is the owner's responsibility to replace missing or damaged warning decals. Decals are available from your Deweze dealer.

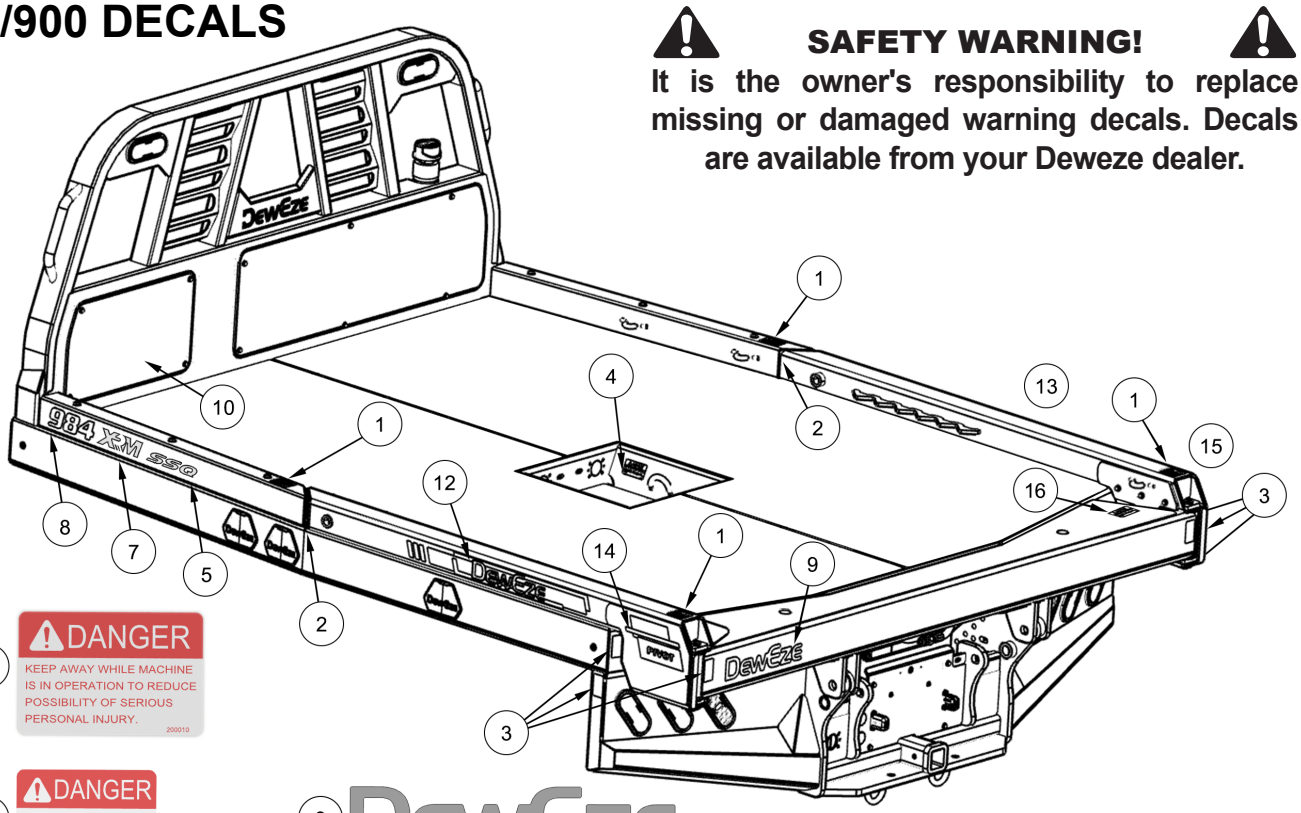

1

DANGER

KEEP AWAY WHILE MACHINE IS IN OPERATION TO REDUCE POSSIBILITY OF SERIOUS PERSONAL INJURY.

200010

2

DANGER

KEEP AWAY WHILE MACHINE IS IN OPERATION TO REDUCE POSSIBILITY OF SERIOUS PERSONAL INJURY.

3

4

NOTICE

MAX TONGUE WEIGHT = 7,500 LBS

DO NOT EXCEED VEHICLE GVW AND/OR MAX AXLE WEIGHT PER VEHICLE OWNER'S MANUAL

200472

5

SSQ

6

7

XRM

8

984

ITEM	QTY	PART #
870	2	202178
871	2	202181
876	2	202170
879	2	202182
976	2	202171
984	2	202172
988	2	202183

9

DewEze

10

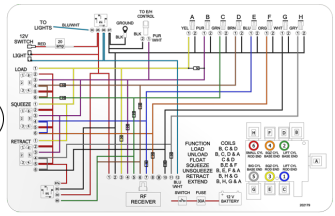

11

WARNING

This battery area/compartment is designed for the use of non-vented batteries only.
Do not place a battery that requires venting into this area/compartment.
Vented batteries can release poisonous and flammable gases.
Can lead to a fire or explosion and result in death or serious injury.

16

WARNING

SHIELD HAS BEEN REMOVED! REPLACE PRIOR TO MACHINE OPERATION

400014

12

DewEze

13

DewEze

14

PIVOT

15

PIVOT

ITEM	QTY	PART #	DESCRIPTION
1	4	200010	Decal, Danger, Red on White
2	2	200144	Decal, Danger Vertical
3	6	200190	Decal, Red Reflector Rectangle
4	1	200472	Decal, Gooseneck Tongue Weight
5	2	202006	Decal, "SSQ"
6	40"	202093	Decal, Pinstripe -40 Warm Silver
7	2	202115	Decal, "XRM"
8	2	202172	Decal, "984" Bed Model
9	1	202175	Decal, "Deweze" Tailboard (No Grfx)
10	1	202179	Decal, Wiring Diagram Non-prop. Valve
11	1	202180	Decal, Non-Vented Battery Warning
12	1	202184	Decal, "Deweze" Driver Side Arm
13	1	202185	Decal, "Deweze" Pass. Side Arm
14	1	202186	Decal, "Pivot" Driver Side Arm
15	1	202187	Decal, "Pivot" Pass. Side Arm
16	2	400014	Decal, Warning, Guard Removed

Hydraulic Safety

- Do not operate the hydraulic system with the hood open.
- Do not activate the electric clutch unless the truck engine is at idle. Operating the clutch at or above 2000 rpm will damage the pump.

INITIAL STARTUP PROCEDURE

- Fill the reservoir monitoring the level via the sight glass (approx 4.25 gal).
- Push the UNLOAD function until the arm raises to 45° angle or less, then LOAD until the arms rest on the bed. Repeat 6 times to ensure cylinders are full and air has been purged over relief.

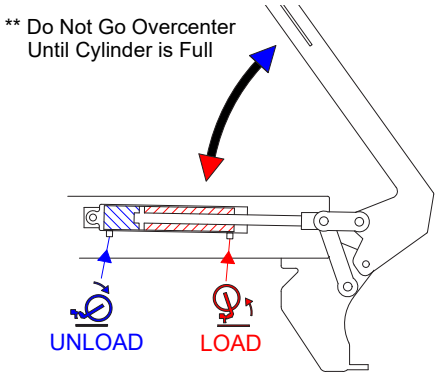

- Check oil level at sight glass and add oil as necessary.
- With arms elevated to clear obstacles, push the UNSQUEEZE function until both arms are fully opened then SQUEEZE until both are fully closed. Repeat 6 times to ensure cylinders are full and air has been purged over relief.
- Check oil level at sight glass and add oil as necessary.

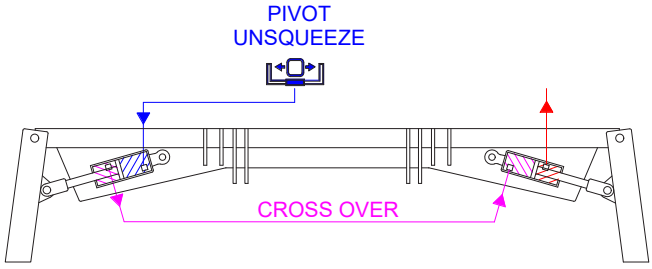

- Cylinders out of sync will rephase when Unsqueezed to end of stroke.
- If XRM is an option, push EXTEND until arms are fully out, then RETRACT. Repeat 6 times to ensure cylinders are full and air has been purged over relief.
- Check oil level at sight glass and add oil as necessary.
- Inspect system for leaks.

Operating Instructions

Remote Control Transmitter

- Instructions for synching the transmitter to the reciever are in *Appendix II*.
- Operates all functions of the flatbed using two AA batteries.
- Wireless transmitter LEDs:
  Green = TRANSMIT
  Red = BATTERY/DIAGNOSTICS
- The green light flashes rapidly when there is communication with the receiver.
- The red light blinks once per second if the battery is low.
- If the red light blinks a specific sequence of times, it is flashing an error code. Refer to the ERROR CODE CHART in *Appendix II*.

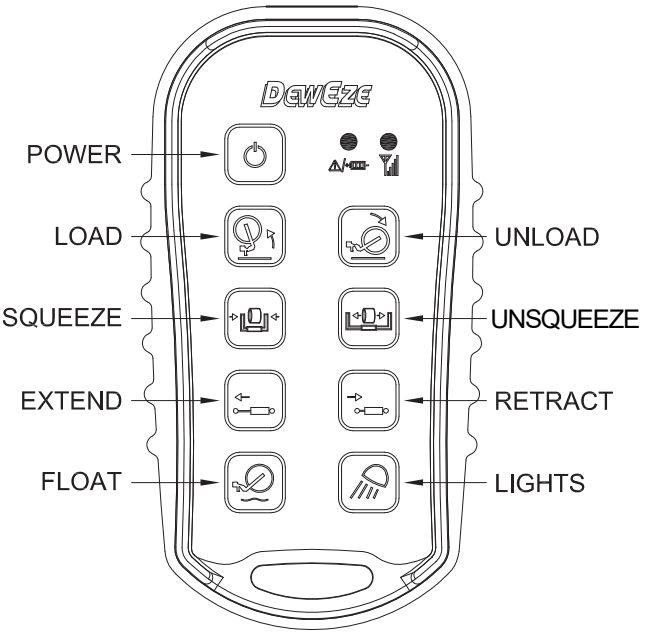

CAUTION: In cold weather, let engine idle for 5-10 minutes with pump on before operating arms to warm oil. Neglecting to do so may cause hydraulic pump failure.

Beginning Operation

- Turn the pump switch on the dash to the "ON" position. (Red light will indicate that pump is on).
- Press and hold the power button on the transmitter until both LEDs turn on, then release.
- The green LED will flash rapidly when the communication has been established. If the receiver is off, the red LED will flash slowly.
- Press the corresponding buttons on the transmitter keypad to turn on and off each of the outputs.

Loading

1) Back truck against bale with the arms wide apart and tilted slightly upward.
2) Lower arms down to center bale height
3) Squeeze bale with arms until fully engaged.
4) Lift the bale onto the truck.
5) Release the bale and repeat the operation for the second bale.

CAUTION: When hauling one bale, make sure it is held tightly and rests on the bed. When hauling two bales make sure the second bale is as far forward as possible (Fig. 1). Carrying a bale behind the bed, as shown in (Fig. 2) places excessive stress on the cylinder, linkage, and pins.

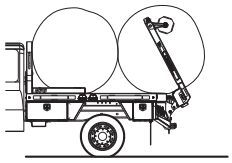

Fig. 1

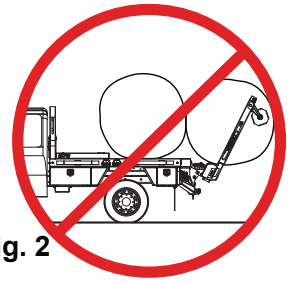

Fig. 2

CAUTION: Do not exceed GVRW rating of truck when loading.

XRM - Extendable Arms (option)

- Always squeeze the bale with the arms in the retracted position.
- Extend the arms and release the bale.
- Fully retract the arms before laying them on the bed.

CAUTION: Squeezing the bale with arms extended may damage the arms and crosstube.

Unloading

- To unload, do the reverse of loading.
- Spinners may sometimes be needed to grip the front bale for unloading.

Unrolling (option)

- Use risers and spinners to unroll a bale.
- Position the arms over the bale so the spinners are at the center of the bale.
- To unroll, lower the bale to the ground.
- Turn the pump off and push the FLOAT switch on the remote control.
- Slowly drive STRAIGHT forward. The bale will gradually unroll.

CAUTION: Turning while unrolling a bale may cause hugger arms to bend.

CAUTION: Failure to use FLOAT while unrolling may damage flatbed frame or lift cylinder. The FLOAT switch on the remote transmitter stays on until it is pressed a second time or another switch is activated. To avoid power loss, always deactivate the FLOAT when not in use.

Spike/Arm Feature

CAUTION: Spikes are for lifting/transporting bales. Lifting heavier objects can damage the crosstube.

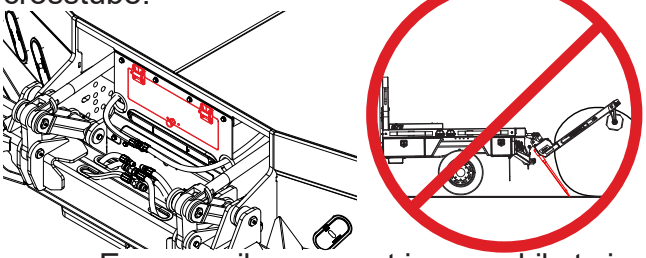

- Ensure spikes are not in use while trying to pick up or unroll a bale with the arms. Bed damage could occur.
- Store spikes when not in use.

Storing the Arms

- Close the arms partially and lay them on the flatbed.
- Open the arms until they are flush with the side of the bed. They now function with the dummy arms as side rails.

Turning System Off

- Turn the pump off when it is not in use.
- The remote control turns itself off automatically after 15 minutes.
- It is good to relieve hydraulic pressure at the end of work. Turn off the pump (clutch), but leave the valve energized. Cycle through all functions LOAD/UNLOAD, SQUEEZE/UNSQUEEZE, EXTEND/RETRACT. Then turn off the valve.

Maintenance

Check Daily or Before Use

- Ensure the hydraulic oil level is “Full” via the sight glass.
- Check the belt, belt tensioner and idler pulleys on engine clutch pump system.
- Examine the hydraulic hoses for leaks with an object such as cardboard.

SAFETY WARNING!

Use extreme caution when greasing the flatbed. Completely lower arms to expose rear zerks and turn off ignition.

Lubrication

Grease the locations indicated in the following illustrations once per week while the unit is in use and at the end of each season (same locations on right and left).

1-4: Idler link pins, idler arm bases, crosstube hinges, lift cylinder *rod* ends.

5: Lift cylinder *base* end

6: Spinners

7: Pivot Arms

8: Liberally apply grease to parallel arm metal-on-metal contact surfaces.

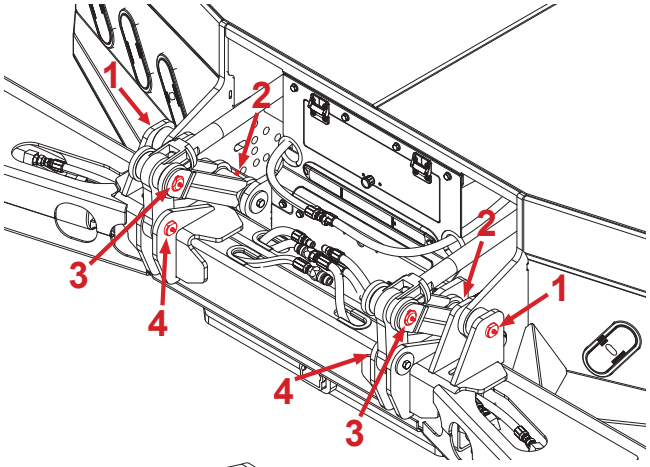

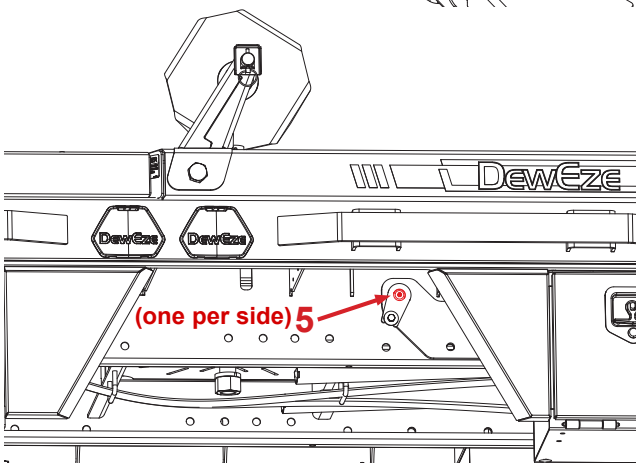

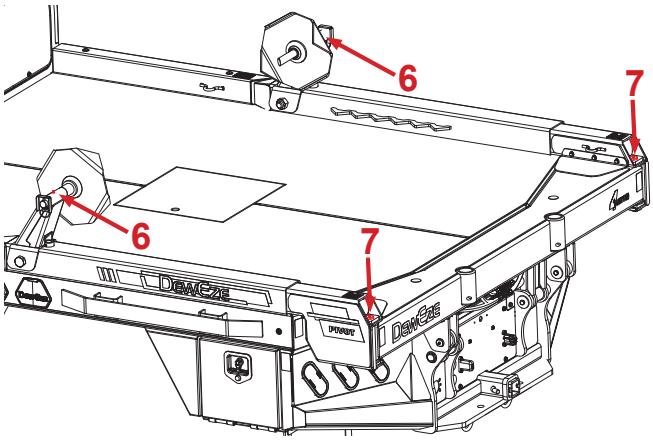

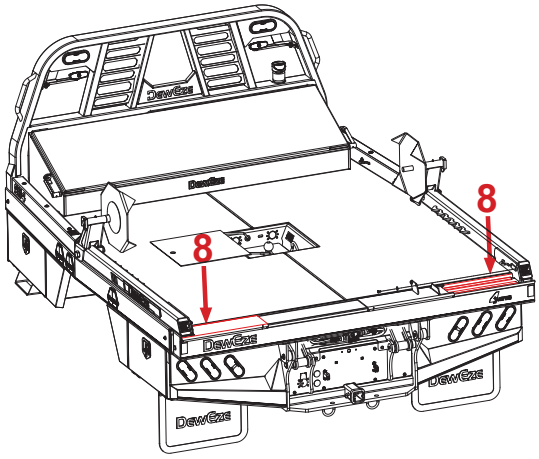

Troubleshooting

Problem	Symptom	Possible Solutions
Hydraulic Pump	No Oil Flow	● CHECK OIL LEVEL IN RESERVOIR. If oil level is low, check for leaks in system then re-fill to FULL. ● CHECK BELT TENSION. Replace tensioner or tighten idlers if needed. Replace belt if worn. ● CHECK FOR SHEARED KEY ON PUMP SHAFT. Replace key. ● CHECK IF SUCTION HOSE COLLAPSES IN SUCTION. Locate and remove obstruction. ● CLUTCH NOT FUNCTIONING. See possible clutch solutions. ● INTERNAL PUMP DAMAGE. **Seek assistance from dealer.**
Hydraulic Pump	No Oil Pressure	● HYDRAULIC OIL LEAKS IN SYSTEM. Take safety precautions and check for leaks. Tighten fittings and replace damaged hoses. ● CHECK FOR MALFUNCTIONING SWITCH. Replace switches. ● BELT OR CLUTCH MAY BE SLIPPING. Replace tensioner or tighten idlers if needed. Replace belt if worn. ● VALVE NOT FUNCTIONING. Check for disconnected wires at solenoid or rusted ground wires. **Seek assistance from dealer if valve continues to be unresponsive.** ● PRESSURE RELIEF MAY BE SET TOO LOW OR BROKEN. **Seek assistance from dealer. FACTORY RECOMENDS 2700 psi:** ● PUMP IS WORN OR DAMAGED. **Seek assistance from dealer.**
Clutch	Does Not Engage	● CHECK FOR BLOWN FUSE. Replace fuse. **CAUTION: FUSE SHOULD NOT EXCEED 30 AMPS** ● CHECK WIRE TO CLUTCH. Insure there are no breaks or shorts. ● CHECK FOR BAD SWITCHES IN SYSTEM. Replace switches. ● CLUTCH IS WORN OUT. **Seek assistance from dealer.**
Belt(s)	Jumps Off Pulley	● BELT(S) TOO LOOSE. Replace tensioner or tighten idler pulleys. ● CHECK FOR EXCESSIVE BELT WEAR. Replace worn belt(s). ● CHECK FOR LOOSE PUMP BRACKET. Tighten loose bolts. Replace broken bolts. ● CHECK CRANKSHAFT PULLEY FOR LOOSE OR BROKEN BOLTS. Tighten loose bolts. Replace broken bolts. ● CHECK ALIGNMENT OF IDLER PULLEYS AND CONDITION OF BEARINGS. Re-align idler pulleys or replace worn idler pulleys. ● CHECK ALIGNMENT OF CLUTCH AND CRANKSHAFT PULLEY. **If misalignment is visible, seek assistance from dealer.**
Arms: Squeeze or Extend	Cylinder is out of sync	● Extend arms all the way out. ● CYLINDERS PLUMBED WRONG OR LEAKS: Re-check plumbing and check for any hydraulic oil leaks that may be present ● BLEED AIR OVER RELIEF. Hold switches in each position for over 60 seconds to ensure air pockets are bled. ● CYLINDER OR SEALS ARE BAD: Replace cylinder or seal kit

Appendix I – GatorHy

GatorHyde Repair Instructions

Required items:

1 – 25 x 25 ml caulking gun (202030)
1 – 25 x 25 ml cartridge set of GatorHyde Repair Material (202031)
1 – pair of rubber gloves
1 – wooden stick
1 – Instruction sheet and MSDS sheet
1 – MEK – methyl ethyl ketone solvent (available at most hardware stores)
1 – small paint brush
2 – plastic cups

⚠ SAFETY WARNING!
Read the Master Safety Data Sheets (MSDS) on all chemicals before handling any chemical.
See: http://www.msds.com

Note:

This repair is designed to easily fix small, damaged areas fast and with limited amount of effort. However this product is fast reacting so make sure to thoroughly read this instruction sheet before proceeding with repairs.

Application Instruction:

Step 1. Before you start, put on rubber gloves and safety glasses.

Step 2. Place a piece of cardboard or newspaper next to the repair area prior to opening and mixing the material.

Step 3. Cut back damaged area with a razor knife to make a square.

Step 4. Sand area and feather edges with 40 grit sandpaper. Blow out sanded area to get rid of dust.

Step 5. Clean area well with MEK solvent and allow to dry for 30 minutes.

Step 6. Attach static mixing wand to 25 x 25 ml cartridge set, twist and lock in place. Insert cartridge into caulking gun.

Step 7. Hold the caulking gun in an upright position in one hand, then set the two plastic cups on a flat surface side by side. Next point the static mixing wand into a cup and squeeze the trigger of the gun two times so a small amount of material is discharged into the cup. (Note! This material is to be discarded.) Immediately move the static mixing wand over and point it into the next cup and continue to discharge the remaining amount of material into this cup.

Step 8. Allow the material to set in cup and gently stir with wooden stick for a period of 1 to 1 ½ minutes or until the GatorHyde becomes thicker and will stick to either a finger or wooden stick.

Step 9. Once material has begun to gel, apply enough product to finger or a stick and immediately dab onto damaged area. Use the paint brush to dab the area in a vertical manner to make a textured surface.

Cure time. Allow repaired area to cure for a period of 1 hour prior to heavy impact loading.

Clean-up. In order to clean up the area take a paper sack or plastic trash bag and place all the empty jars and remaining contents of the repair kit and dispose into a standard trash can or simply put everything back in the box and throw away.

GatorHyde Protective Coatings, Inc., 2210 South Highway 69, Wagoner, OK 74467 * (918) 485-2835 * www.gatorhyde.com

Appendix II

Remote Control

SYNCHRONIZING TRANSMITTER AND RECEIVER

To teach the transmitter ID code to the receiver, use the following procedure:

1. Make sure the receiver and transmitter are OFF.
2. Press and hold transmitter's button 1 and 8 (as shown) then press Power button until both LEDs start blinking, then release buttons.
3. Apply power to the receiver.
4. Wait for ~5 seconds or until the green LED on the transmitter starts blinking rapidly.
5. Teach complete.

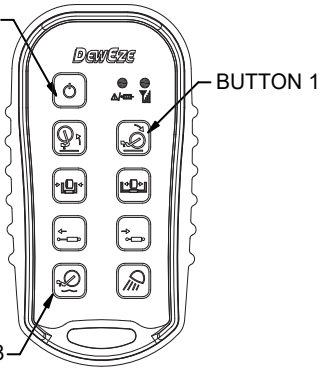

TRANSMITTER ERROR CODE CHART

ERROR CODE	PROBABLE CAUSE
1	LOW BATTERY
2	FAULTY CIRCUIT TO OUTPUT A
3	FAULTY CIRCUIT TO OUTPUT B
4	FAULTY CIRCUIT TO OUTPUT C
5	FAULTY CIRCUIT TO OUTPUT D
6	FAULTY CIRCUIT TO OUTPUT E
7	FAULTY CIRCUIT TO OUTPUT F
8	FAULTY CIRCUIT TO OUTPUT G
9	FAULTY CIRCUIT TO OUTPUTH
10	FAULTY CIRCUIT TO LIGHT OUTPUT

ERROR CODE IS THE NUMBER OF RED BLINKS BETWEEN EVERY PAUSE.

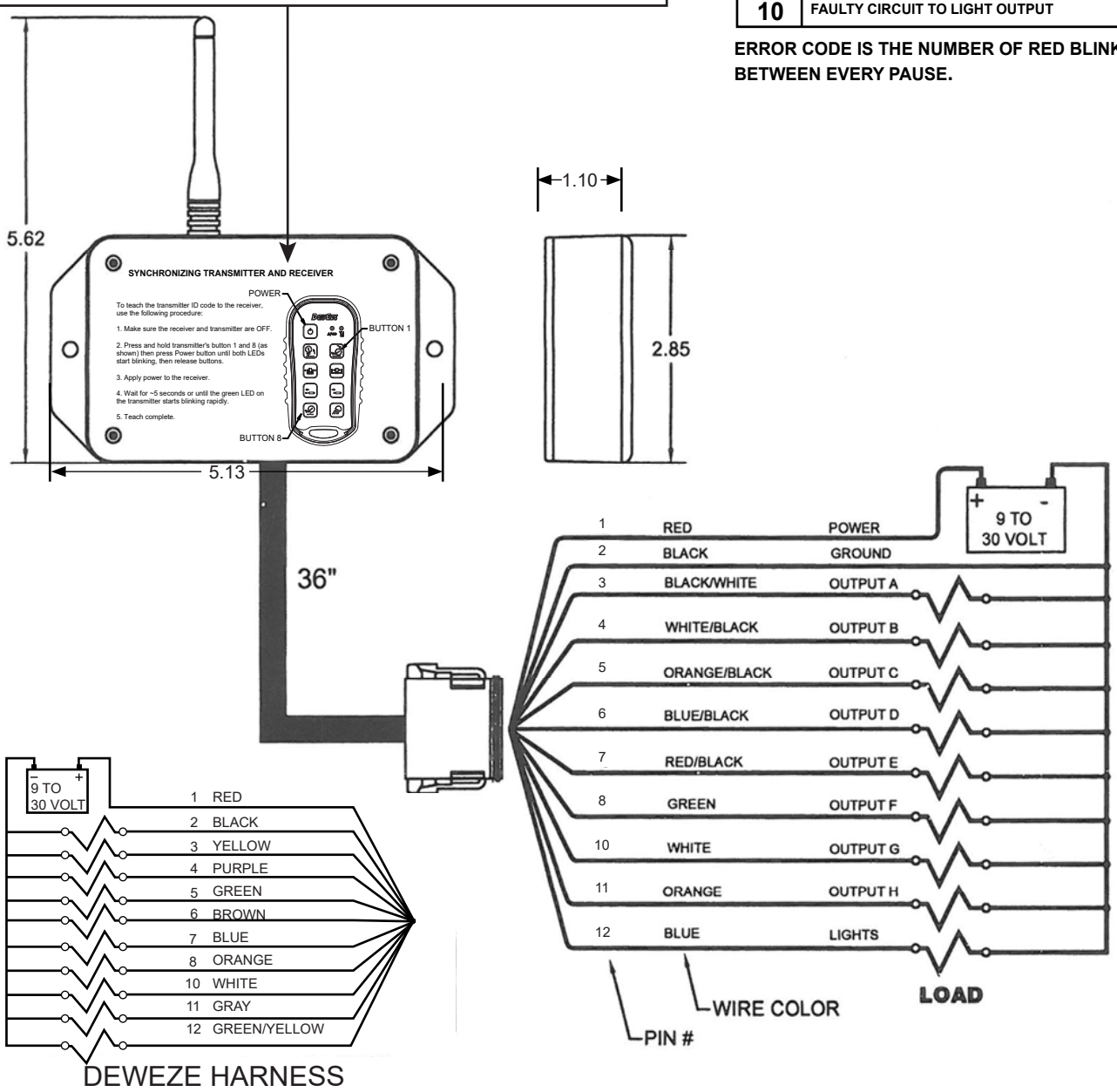

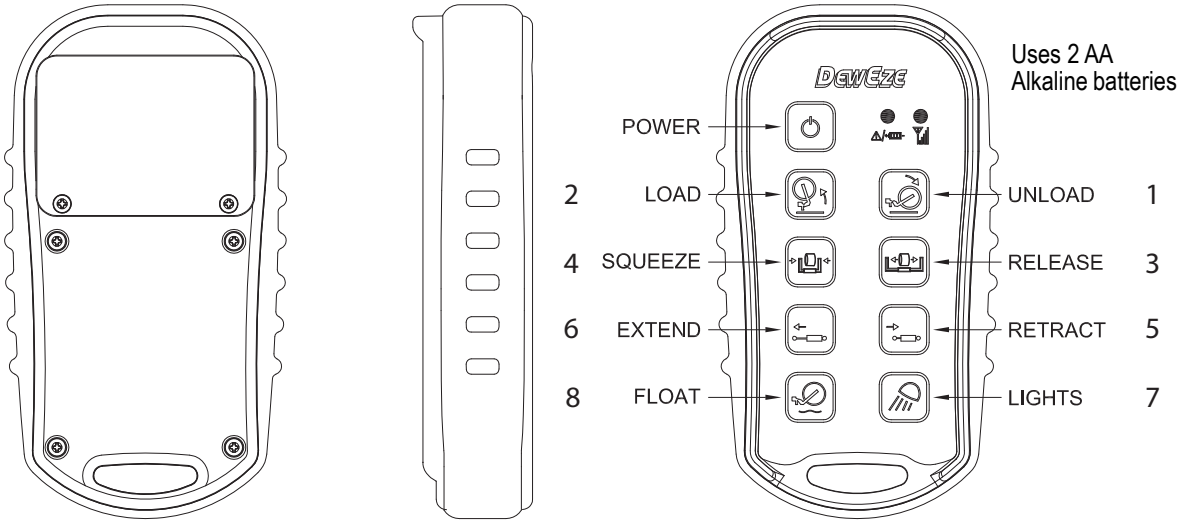

SYSTEM OPERATION:

Press and hold the power button on the transmitter until both LEDs turn on, then release. The green LED will flash rapidly when communication has been established. When the receiver is off, the red LED will flash slowly indicating this. With the receiver on, press the corresponding buttons on the tranmitter keypad to turn on and off each of the outputs.

INDICATOR LIGHTS:

The transmitter has two LED indicators, the red BATTERY/DIAGNOSTIC indicator and the green TRANSMIT indicator.
The green TRANSMIT indicator flashes rapidly whenever there is communication between the transmitter and the receiver.
The red BATTERY/DIAGNOSTIC indicator blinks once per second when the battery voltage is low. It also blinks when there is a problem with the system in the form of an error code. Refer to the ERROR CODE CHART tables for more information.
Note: To check for low battery, turn the receiver off and leave the transmitter on. If the transmitter red LED continues to blink, the battery is low. If the red LED blinks only when the receiver is ON, count the number of blinks and refer to the ERROR CODE CHART.

SLEEP TIME:

The transmitter is factory set to turn off (sleep) after 15 minutes. Use the following procedure to change the time before sleep mode.

1. Press and hold 3 (UNSQEEZE), 4 (SQUEEZE), 8 (FLOAT) and POWER
2. Release the buttons and both lights should blink once per second.
3. Choose one of the following buttons:
    a. 1 (UNLOAD) = 15 min
    b. 2 (LOAD) = 30 min
    c. 3 (UNSQUEEZE) = 1 hr
    d. 4 (SQUEEZE) = 2 hr
    e. 8 (FLOAT) = sleep disabled.

AG PROGRAM ***(set at the factory)***
POWER OFF - Receiver & Transmitter
POWER ON - Transmitter
HOLD buttons 1, 4 & 8 until RED light blinks
POWER ON - Receiver
PRESS **Button 2**.
PRESS transmitter PWR button to save selection and exit config mode.

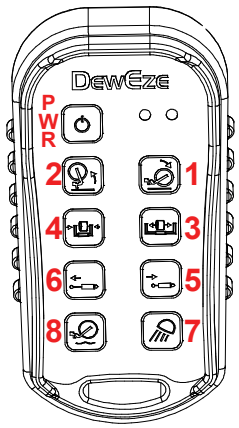

SPECIFICATIONS:

RF Transmit power (EIRP): 10 mW
RF Frequency: 902-928 MHz
Operating temperature - Radio: -40C to +85C
Battery life (min): 30 hours continuous.
Vibration: 3G to 200Hz
Outputs: 5A max each (20A system max)

Appendix III

Heavy Duty E/H Power Kit

* Read all instructions first. See page 50

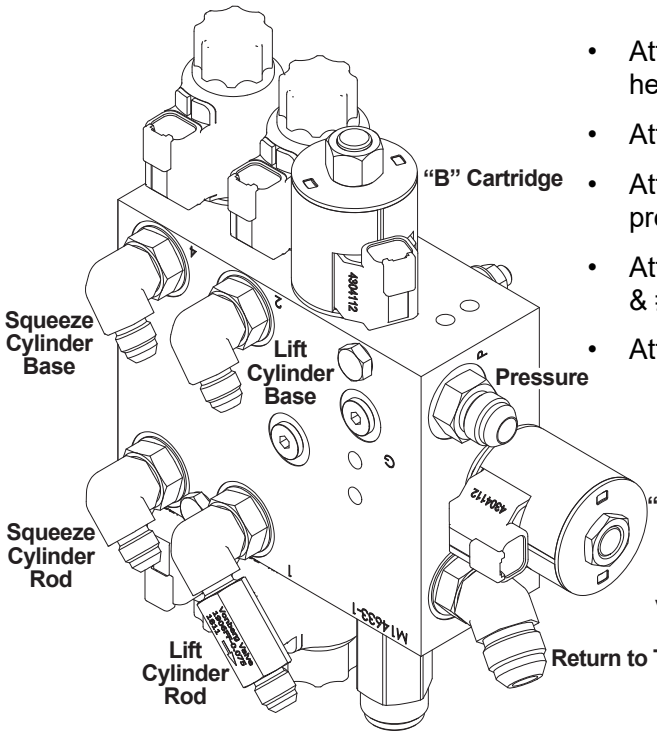

Valve details pg 39

- Attach adapters to valve and install inside cavity on headache rack.
- Attach valve harness per diagram on decal
- Attach return hose to valve and filter housing. Attach pressure hose from pump.
- Attach 1/2" hoses from squeeze cylinder to valve ports #3 & #4.
- Attach 3/8" hoses from lift cylinder to valve ports #1 & #2.

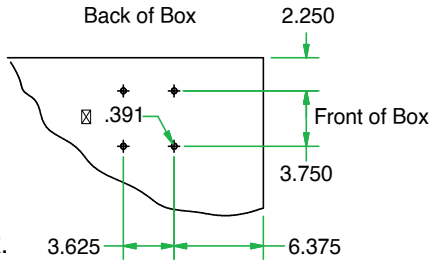

- Use cover plate to locate cutout in right side of toolbox.
- Use access cover or edge molding to protect hoses.
- Drill holes for 3/8" bolts as indicated and bolt pump to inside of toolbox.

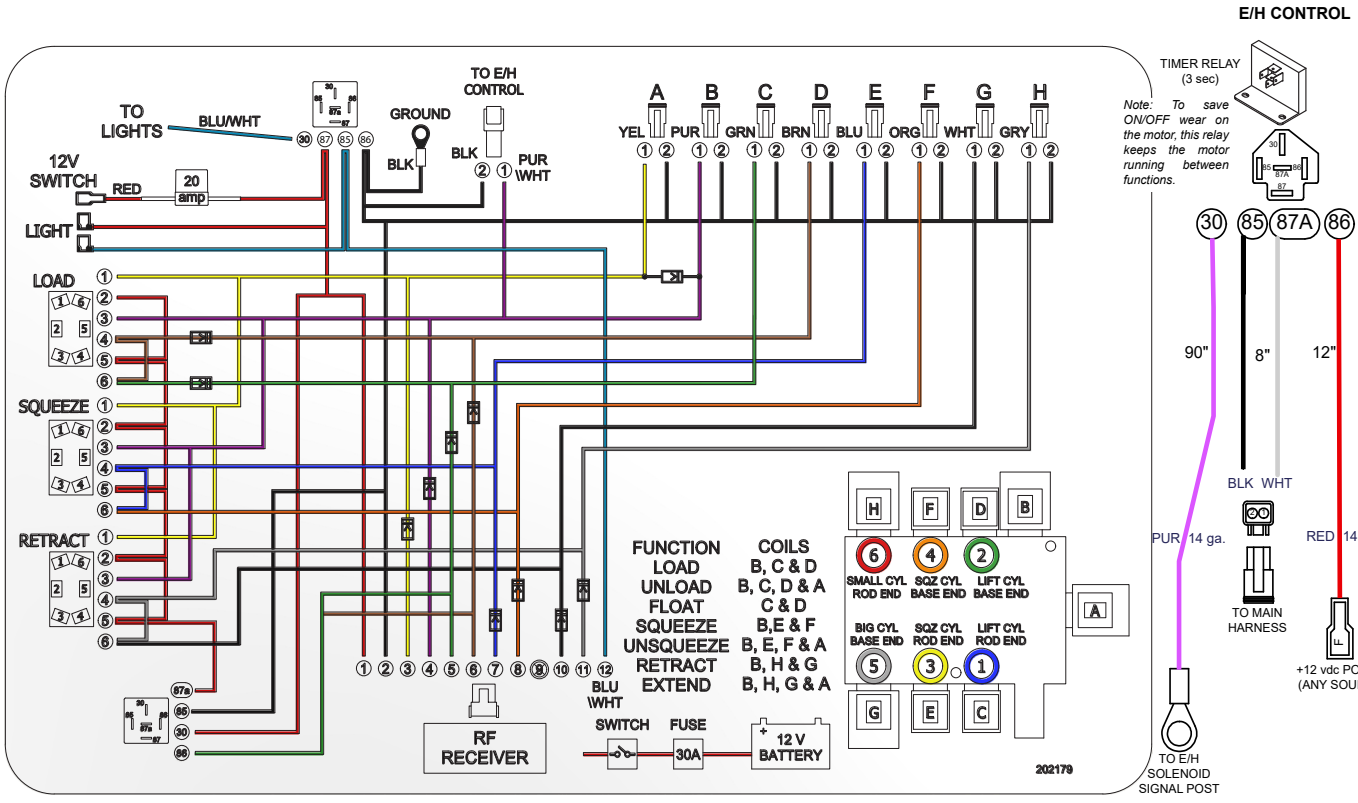

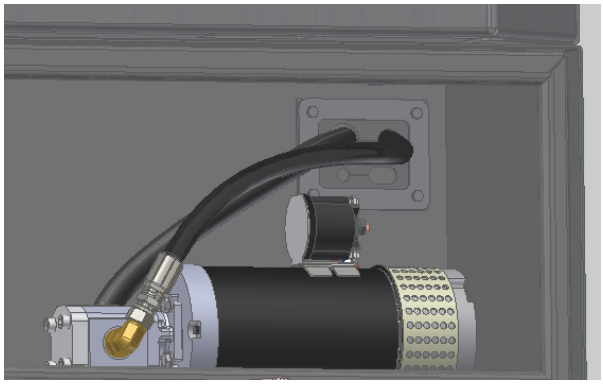

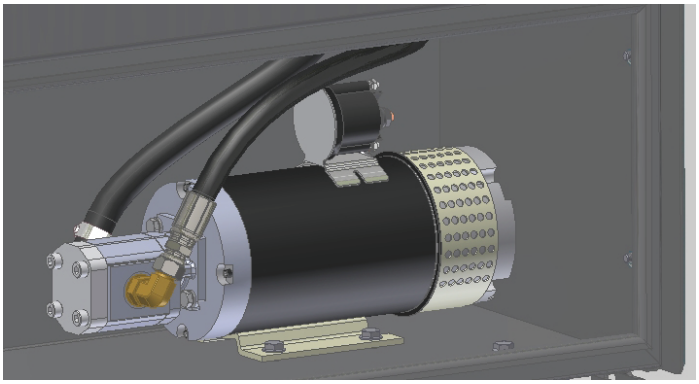

- Attach power harness as indicated.
- Attach 30-amp fuse holder to positive terminal on battery. Run wire through switch on dash and then to the red wire on the harness.
- Attach suction hose and pressure hose to pump with adapters provided.
- Attach suction hose to bottom of reservoir.
- Run battery cables through hole in toolbox and attach to E/H motor as indicated.
- Run battery cables along frame rail and attach black cable to negative terminal on battery.
- Attach 200-amp fuse holder to positive battery terminal.
- Insert 200-amp fuse.
- Attach red cable from E/H on top of “ice cube” fuse. Install rubber cap.

If installing the 735021 Switch Unit — Read the E/H Hybrid specific instructions first. Pg. 51

DewEze®

800/900 SERIES

PARTS

Table of Contents

PARTS SECTION
Dummy Arms..... 20
800 Arms, Crosstubes, Cylinders & Hoses
800 Pivot & Pivot Spike..... 21
800 XRM Pivot & Pivot Spike..... 22
800 XRM Cylinders & Hydraulics..... 23
800 Parallel..... 24
800 Parallel XRM..... 25
900 Arms, Crosstubes, Cylinders & Hoses
900 Pivot & Pivot Spike..... 26
900 XRM Pivot & Pivot Spike..... 27
900 XRM Cylinders & Hydraulics..... 28
900 Parallel..... 29
900 Parallel XRM..... 30
800/900 Common Cylinders
Lift Cylinders & Linkage..... 31
Squeeze Cylinders..... 32
Hose Routings
Pivot Hose Routing & Parts..... 33
Pivot XRM Hose Routing & Parts..... 34
Parallel Hose Routing & Parts..... 35
Parallel XRM Hose Routing & Parts..... 36
3rd Bank Routing Options..... 37
Hydraulic System Components
Non-Proportional Hydraulic Schematic..... 38
Valve & 3rd Bank.....39-40
Reservoir & Filter.....41-42
Electrical Components
Valve Switches..... 43
Electrical Harness Routing and Adapters.....44-47
Controls Wireless & Corded.....48-49
E/H HD and Hybrid
Kits and Components..... 50
Hybrid Instructions..... 51
E/H Install & Wiring Guides.....52-53
800/900 Common Parts and Options
Lights.....54-55
Headache Rack Covers & Components..... 56
Ball Well & Hitch Pin..... 57
Decals..... 58
Spike Components & Rear Panel Assy..... 59
Spinners..... 60
Risers..... 61
Lift Bars..... 61
Skirt Selection Details..... 62-63
Toolbox Selection Details..... 64-65
Toolbox Install Kits..... 66
Mudflaps..... 66
Mounting Kits, Rear View Camera..... 67
Mounting Kits, Bed..... 68
Bed Stringer Measurements..... 69

DUMMY ARMS

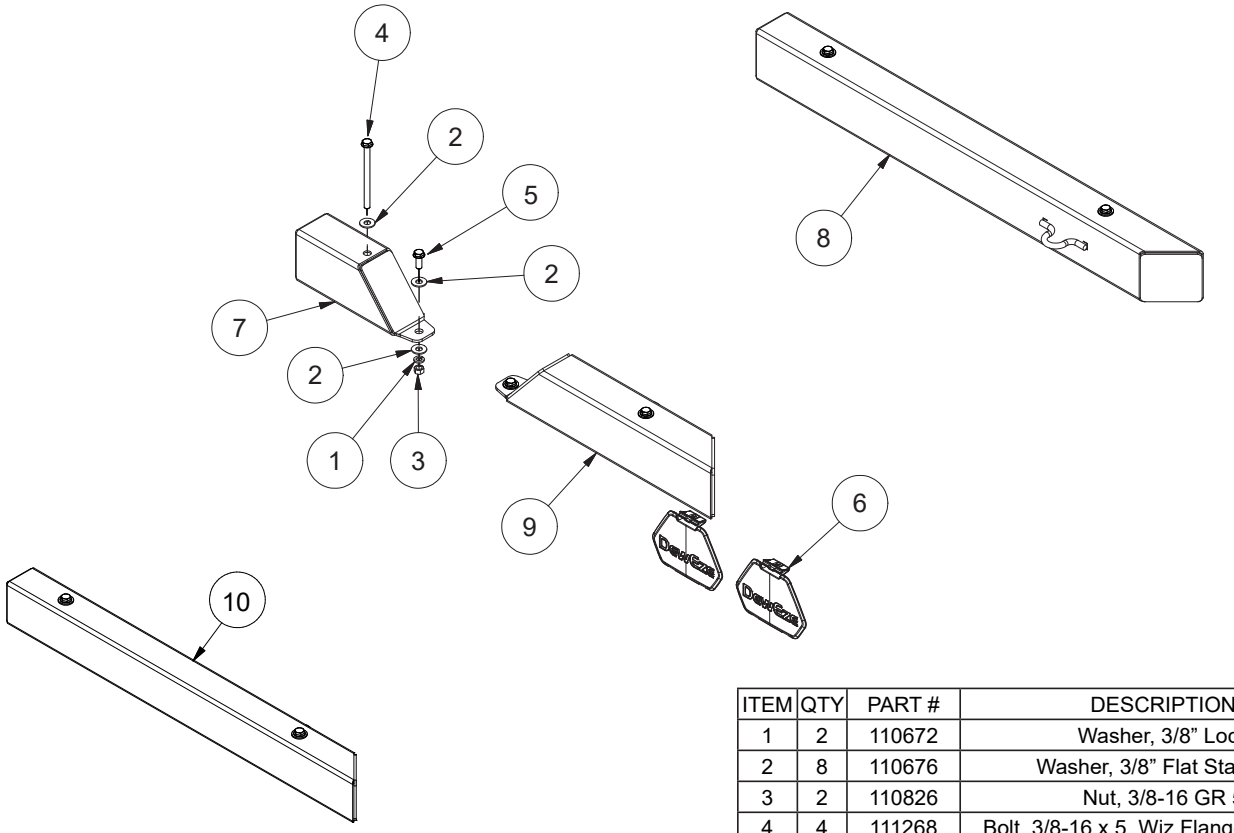

ITEM	QTY	PART #	DESCRIPTION
1	2	110672	Washer, 3/8” Lock
2	8	110676	Washer, 3/8” Flat Standard
3	2	110826	Nut, 3/8-16 GR 5
4	4	111268	Bolt, 3/8-16 x 5, Wiz Flange Gr. 5 Zinc
5	2	110440	Bolt, 3/8-16 x 1, Wiz Flange Gr. 5 Zinc
6	2	202168	Cover, Fuel & Def
7	1	See Chart	Dummy Arm, FRONT, Cake Feeder
8	1	See Chart	Dummy Arm, PASS. Side
9	1	See Chart	Dummy Arm, REAR, Cake Feeder
10	1	See Chart	Dummy Arm, DRIVER Side
11	1	See pg. 58	Decal, Warning (in dummy arm kit)
12	1	See pg. 58	Decal, Bed Model (in dummy arm kit)

BED MODELS	STANDARD		BEEFCAKE 1000			BEEFCAKE 1500			BEEFCAKE 2000		
	Driver	Pass.	Pass.	F	R	Pass.	F	R	Pass.	F	R
870 Piv/Par	266011	266018	NA	NA	NA	NA	NA	NA	NA	NA	NA
871 Piv/Par	266012	266019	NA	NA	NA	NA	NA	NA	NA	NA	NA
876 Piv/Par	266013	266020	266020	265186	266044	266020	265187	266045	NA	NA	NA
879 Piv/Par	266014	266021	266021	265186	266042	266021	265187	266046	266021	265187	266043
976 Piv/Par	266015	266022	266022	265186	266035	266022	265187	266036	NA	NA	NA
984 Piv/Par	266016	266023	266023	265186	266037	266023	265187	266038	266023	265187	266039
988 Piv/Par	266017	266024	NA	NA	NA	266024	265187	266040	266024	265187	266041
BED MODELS	**Both Sides**		Pass.	F	R	Pass.	F	R	Pass.	F	R
1870 Bev/Sqr	265071		NA	NA	NA	NA	NA	NA	NA	NA	NA
1871 Bev/Sqr	265132		NA	NA	NA	NA	NA	NA	NA	NA	NA
1876 Bev/Sqr	265005		265005	265186	266044	265005	265187	266045	NA	NA	NA
1879 Bev/Sqr	265133		265133	265186	266042	265133	265187	266046	265133	265187	266043
1976 Bev/Sqr	265006		265006	265186	266035	265006	265187	266036	NA	NA	NA
1984 Bev/Sqr	265007		265007	265186	266037	265007	265187	266038	265007	265187	266039
1988 Bev/Sqr	265162		NA	NA	NA	265162	265187	266040	265162	265187	266041

800 PIVOT & SPIKE CROSSTUBE ARMS & HYDRAULICS

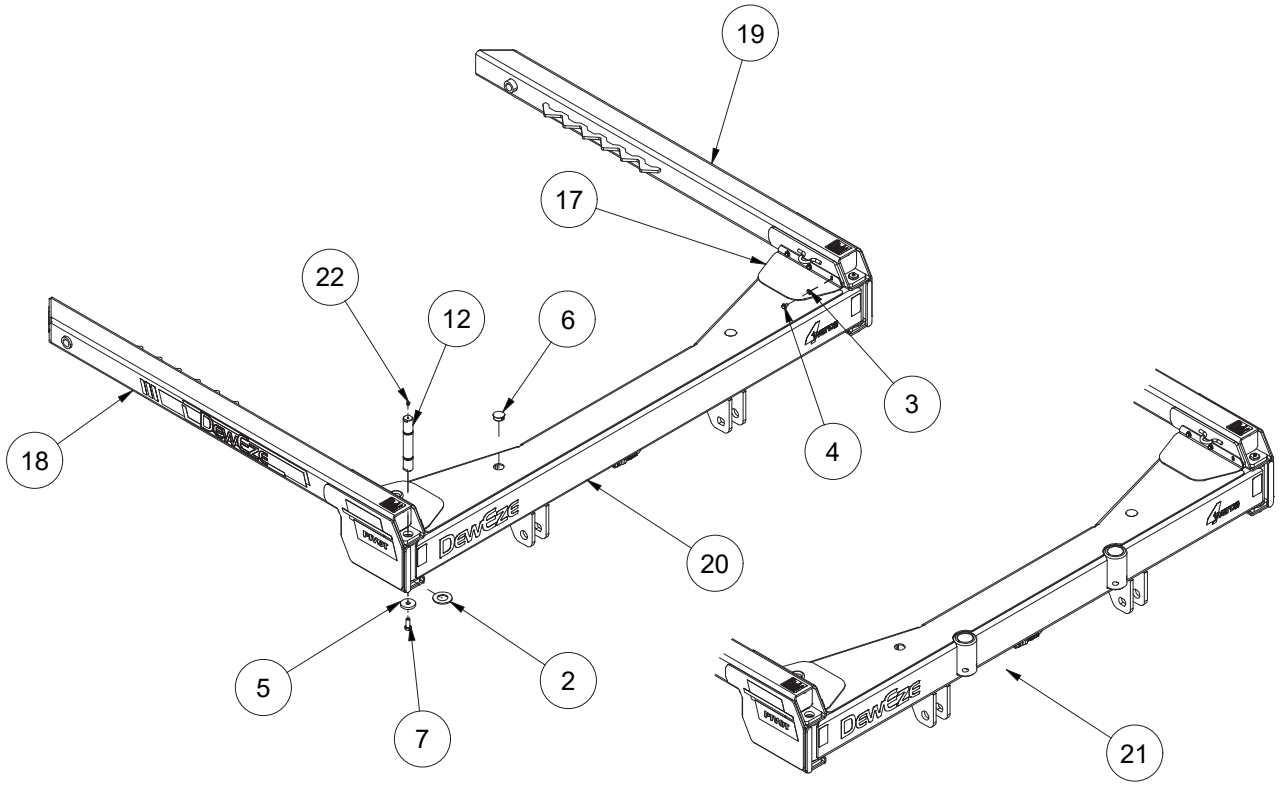

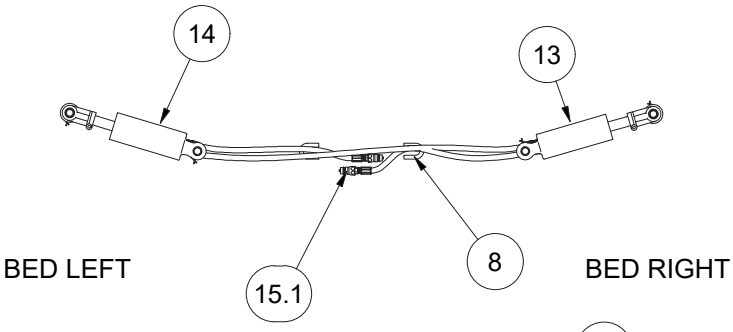

BED LEFT

BED RIGHT

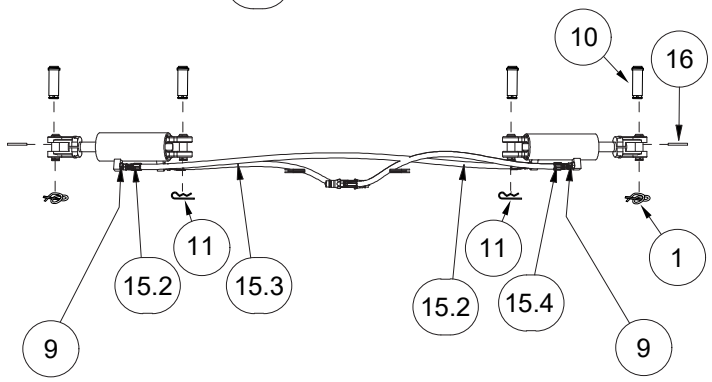

NOTES:
TORQUE 111211 TO 106 lb-ft

ITEM	QTY	PART #	DESCRIPTION
1	2	102122	Locking Cotter Ring, 1”
2	2	110041	Washer, 1-1/4” Flat SAE
3	6	110069	Washer, 5/16” Flat SAE
4	6	110426	Bolt, 5/16-18 X 0.5, Wiz Flange
5	2	110659	Washer, 1.95 X .531 X .3125
6	2	111039	Plug, Plastic, 1.375 Thick Panel Dome
7	2	111211	Bolt, 1/2-13 X 1.25, Gr8
8	2	112084	Rubber Seal, .50 X .25
9	4	120319	Adapter, 6mj-6mb
10	4	202059	Clevis Pin
11	2	202060	Clip, Clevis Pin
12	2	212065	Pin, Pivot Arm
13	1	223042	Pivot Cylinder, 3.0 X 5.0
14	1	223043	Pivot Cylinder, 3.25 X 5.0
15	1	223104	Hydraulic Hose Kit, Pivot 8--
15.1	2	120582	Coupler, Pioneer Male, ORB
15.2	1	220711	Hose, .375 X 56.0 6fjx/6fjx
15.3	1	220828	Hose, .375 X 27.0, 6fjx/6-8mb
15.4	1	220829	Hose, .375 X 32.0 6fjx/6-8mb
16	2	260302	Shim Washer
17	2	261035	Shield, Pivot Arm
18	1	266001	Kit, Pivot Arm, Left
19	1	266002	Kit, Pivot Arm, Right
20	1	266007	Kit, Crosstube, Pivot
21	1	266009	Kit, Crosstube, Pivot Spike
22	2	510174	Grease Zerk, 1/4-28 ST

800 XRM PIVOT & SPIKE CROSSTUBE & ARMS

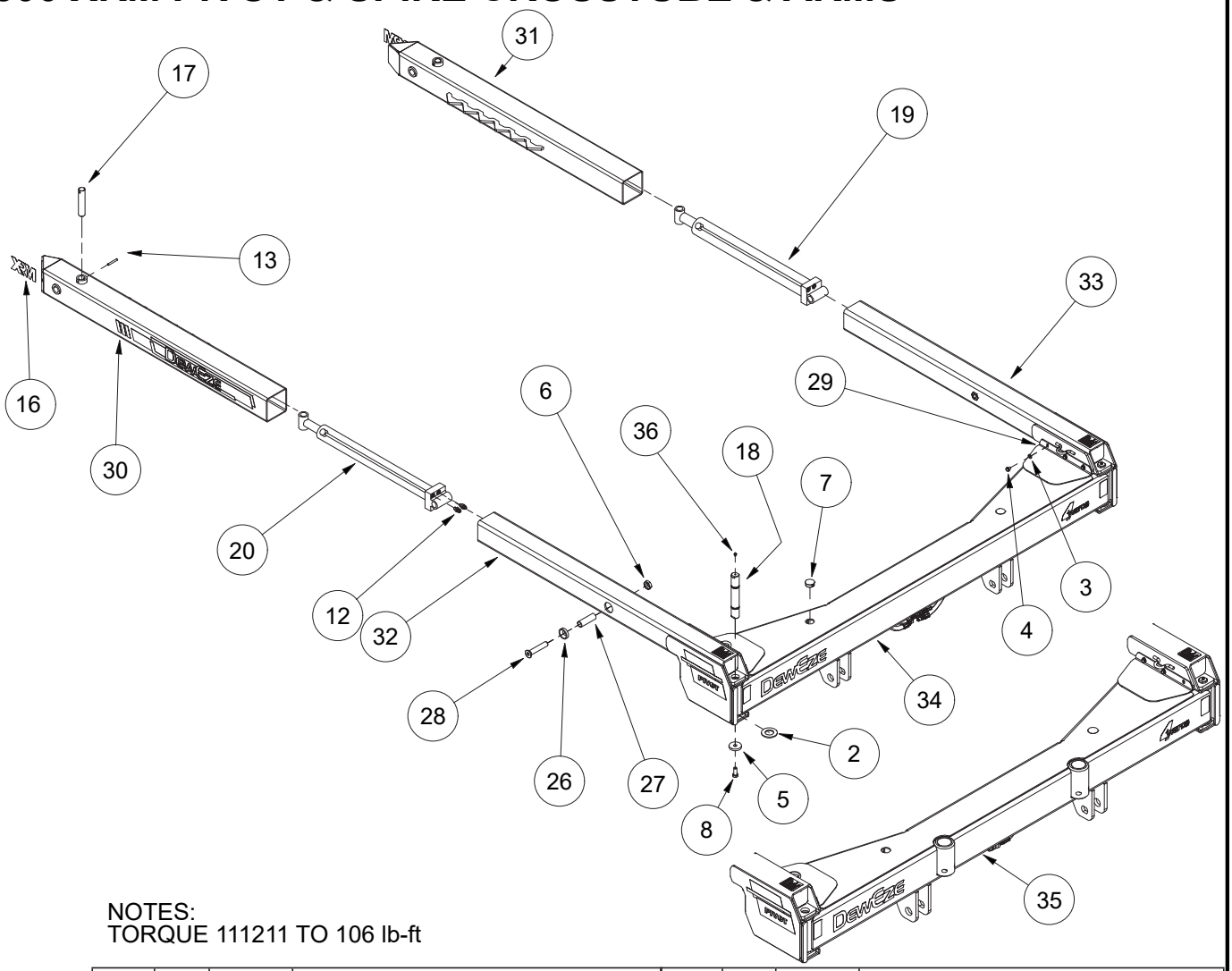

NOTES:
TORQUE 111211 TO 106 lb-ft

ITEM	QTY	PART #	DESCRIPTION	ITEM	QTY	PART #	DESCRIPTION
1	2	102122	Locking Cotter Ring, 1”	22	1	223043	Pivot Cylinder, 3.25 X 5.0
2	2	110041	Washer, 1-1/4” Flat SAE	23	1	223060	Hose Kit, Pivot XRM, Short 67-
3	6	110069	Washer, 5/16” Flat SAE	23.1	2	220732	Hose, .375 X 65.0 6fjx/6fjx
4	6	110426	Bolt, 5/16-18 X 0.5, Wiz Flange	23.2	2	220735	Hose, .375 X 69.0 6fjx/6mj
5	2	110659	Washer, 1.95 X .531 X .3125	24	1	223104	Hydraulic Hose Kit, Pivot 8--
6	2	111036	Heavy Jam Hex Nut 3/4-10 UNC	24.1	2	120582	Coupler, Pioneer Male, ORB
7	2	111039	Plug, Plastic, 1.375 Thick Panel Dome	24.2	1	220711	Hose, .375 X 56.0 6fjx/6fjx
8	2	111211	Bolt, 1/2-13 X 1.25, Gr8	24.3	1	220828	Hose, .375 X 27.0, 6fjx/6-8mb
9	4	112084	Rubber Seal, .50 X .25	24.4	1	220829	Hose, .375 X 32.0 6fjx/6-8mb
10	4	120319	Adapter, 6mj-6mb	25	2	260302	Shim Washer
11	1	120603	Adapter, 6mj-6mj	26	2	260348	Spacer, 1.75 X .375, 82° C’sink
12	4	120665	Adapter, 6mj-4mb	27	2	260349	Bushing, 1.0 X .78 X 3.125
13	2	200150	Roll Pin, 1/4 X 2	28	2	260350	Bolt, 3/4-10 X 4.05 FH SCHS
14	4	202059	Clevis Pin	29	2	261035	Shield, Pivot Arm
15	2	202060	Clip, Clevis Pin	30	1	266003	Kit, Ext. Arm, Pivot, Left
16	2	202115	Decal, XRM, Red	31	1	266004	Kit, Ext. Arm, Pivot, Right
17	2	210941	Cylinder Pin	32	1	266005	Kit, Pivot Arm, XRM, Left
18	2	212065	Pin, Pivot Arm	33	1	266006	Kit, Pivot Arm, XRM, Right
19	1	220455	Extension Cylinder 2.5	34	1	266007	Kit, Crosstube, Pivot
20	1	220456	Extension Cylinder 2.0	35	1	266009	Kit, Crosstube, Pivot Spike
21	1	223042	Pivot Cylinder, 3.0 X 5.0	36	2	510174	Grease Zerk, 1/4-28 ST

800 XRM PIVOT & SPIKE CYLINDERS & HYDRAULICS

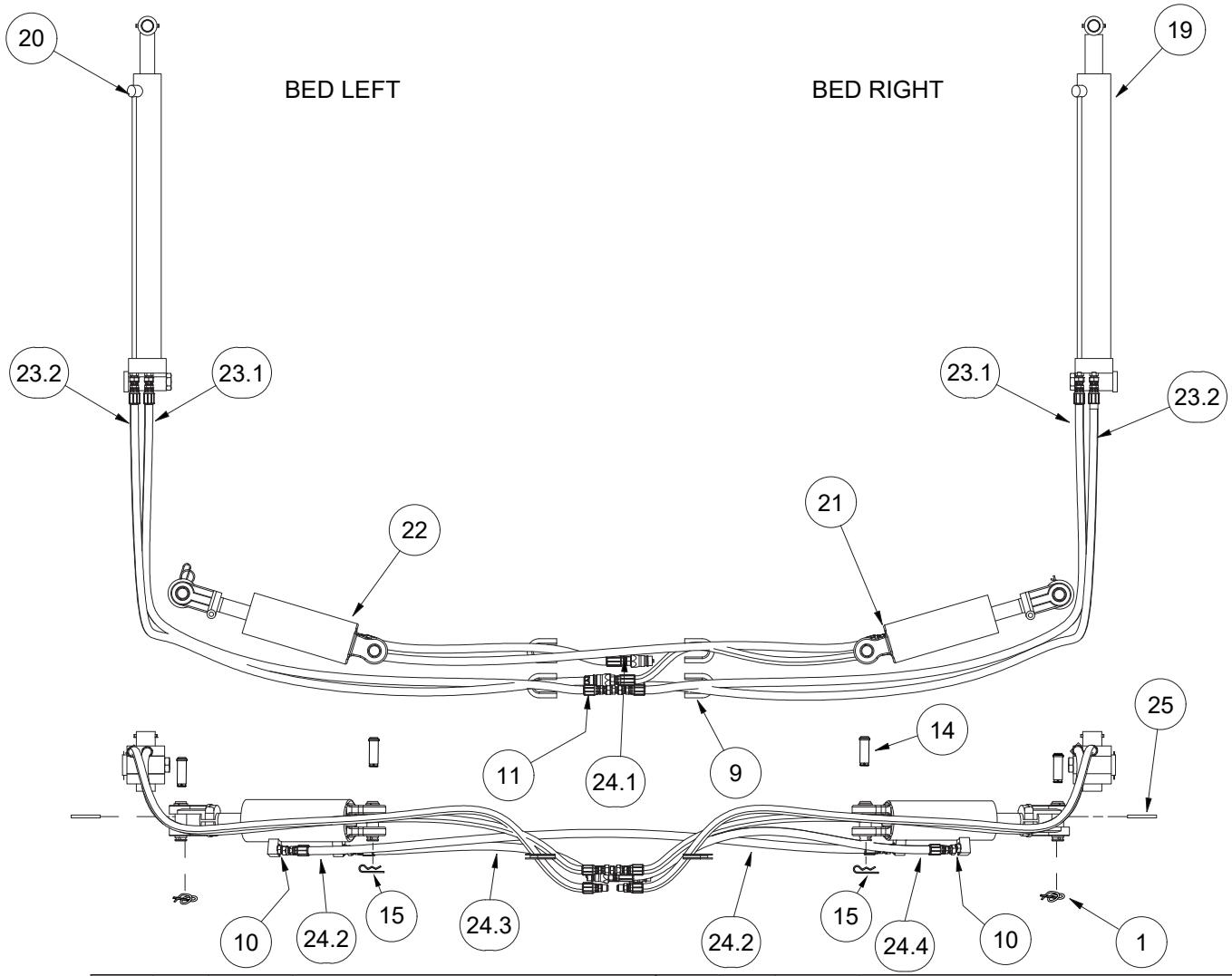

ITEM	QTY	PART #	DESCRIPTION	ITEM	QTY	PART #	DESCRIPTION
1	2	102122	Locking Cotter Ring, 1”	22	1	223043	Pivot Cylinder, 3.25 X 5.0
2	2	110041	Washer, 1-1/4” Flat SAE	23	1	223060	Hose Kit, Pivot XRM, Short 67-
3	6	110069	Washer, 5/16” Flat SAE	23.1	2	220732	Hose, .375 X 65.0 6fjx/6fjx
4	6	110426	Bolt, 5/16-18 X 0.5, Wiz Flange	23.2	2	220735	Hose, .375 X 69.0 6fjx/6mj
5	2	110659	Washer, 1.95 X .531 X .3125	24	1	223104	Hydraulic Hose Kit, Pivot 8--
6	2	111036	Heavy Jamhexnut 3_4-10 UNC	24.1	2	120582	Coupler, Pioneer Male, ORB
7	2	111039	Plug, Plastic, 1.375 Thick Panel Dome	24.2	1	220711	Hose, .375 X 56.0 6fjx/6fjx
8	2	111211	Bolt, 1/2-13 X 1.25, Gr8	24.3	1	220828	Hose, .375 X 27.0, 6fjx/6-8mb
9	4	112084	Rubber Seal, .50 X .25	24.4	1	220829	Hose, .375 X 32.0 6fjx/6-8mb
10	4	120319	Adapter, 6mj-6mb	25	2	260302	Shim Washer
11	1	120603	Adapter, 6mj-6mj	26	2	260348	Spacer, 1.75 X .375, 82° C’sink
12	4	120665	Adapter, 6mj-4mb	27	2	260349	Bushing, 1.0 X .78 X 3.125
13	2	200150	Roll Pin, 1/4 X 2	28	2	260350	Bolt, 3/4-10 X 4.05 FH SCHS
14	4	202059	Clevis Pin	29	2	261035	Shield, Pivot Arm
15	2	202060	Clip, Clevis Pin	30	1	266003	Kit, Ext. Arm, Pivot, Left,
16	2	202115	Decal, XRM, Red	31	1	266004	Kit, Ext. Arm, Pivot, Right,
17	2	210941	Cylinder Pin	32	1	266005	Kit, Pivot Arm, XRM, Left,
18	2	212065	Pin, Pivot Arm	33	1	266006	Kit, Pivot Arm, XRM, Right,
19	1	220455	Extension Cylinder 2.5	34	1	266007	Kit, Crosstube, Pivot
20	1	220456	Extension Cylinder 2.0	35	1	266009	Kit, Crosstube, Pivot Spike
21	1	223042	Pivot Cylinder, 3.0 X 5.0	36	2	510174	Grease Zerk, 1/4-28 ST

800 PARALLEL CROSSTUBE & ARMS

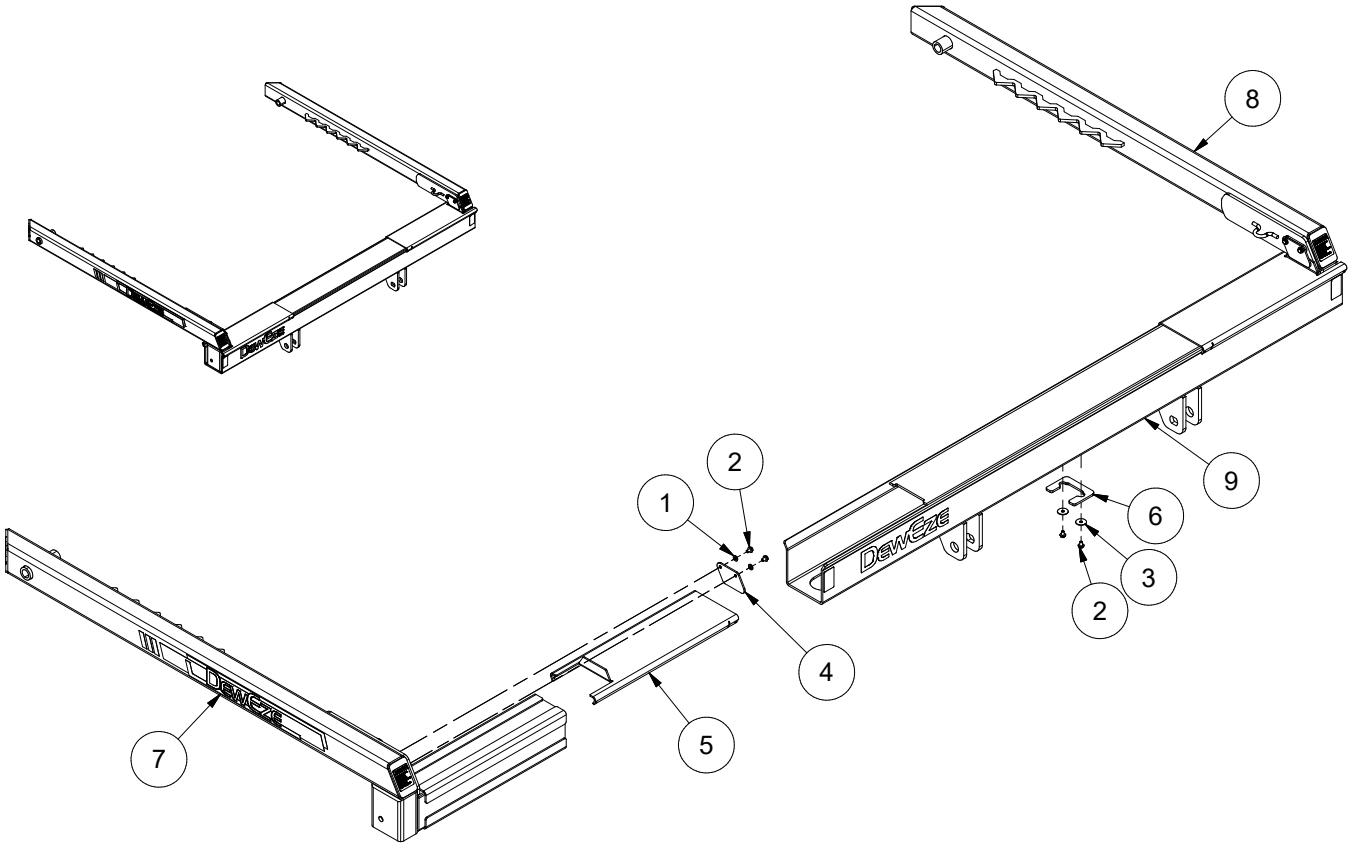

ITEM	QTY	PART #	DESCRIPTION
1	4	110069	Washer, 5/16" Flat Sae
2	6	110426	Bolt, 5/16-18 X 0.5, Wiz Flange
3	2	111155	Washer, 5/16 Flat, Large Dia. 1-1/4 Zinc
4	2	261213	Plate
5	2	261214	Shield, Crosstube
6	1	261384	Plate
7	1	266026	Kit, Parallel Arm, Left
8	1	266027	Kit, Parallel Arm, Right
9	1	266034	Kit, Crosstube, Parallel, 8--

800 PARALLEL XRM CROSSTUBE CYLINDERS & HYDRAULICS

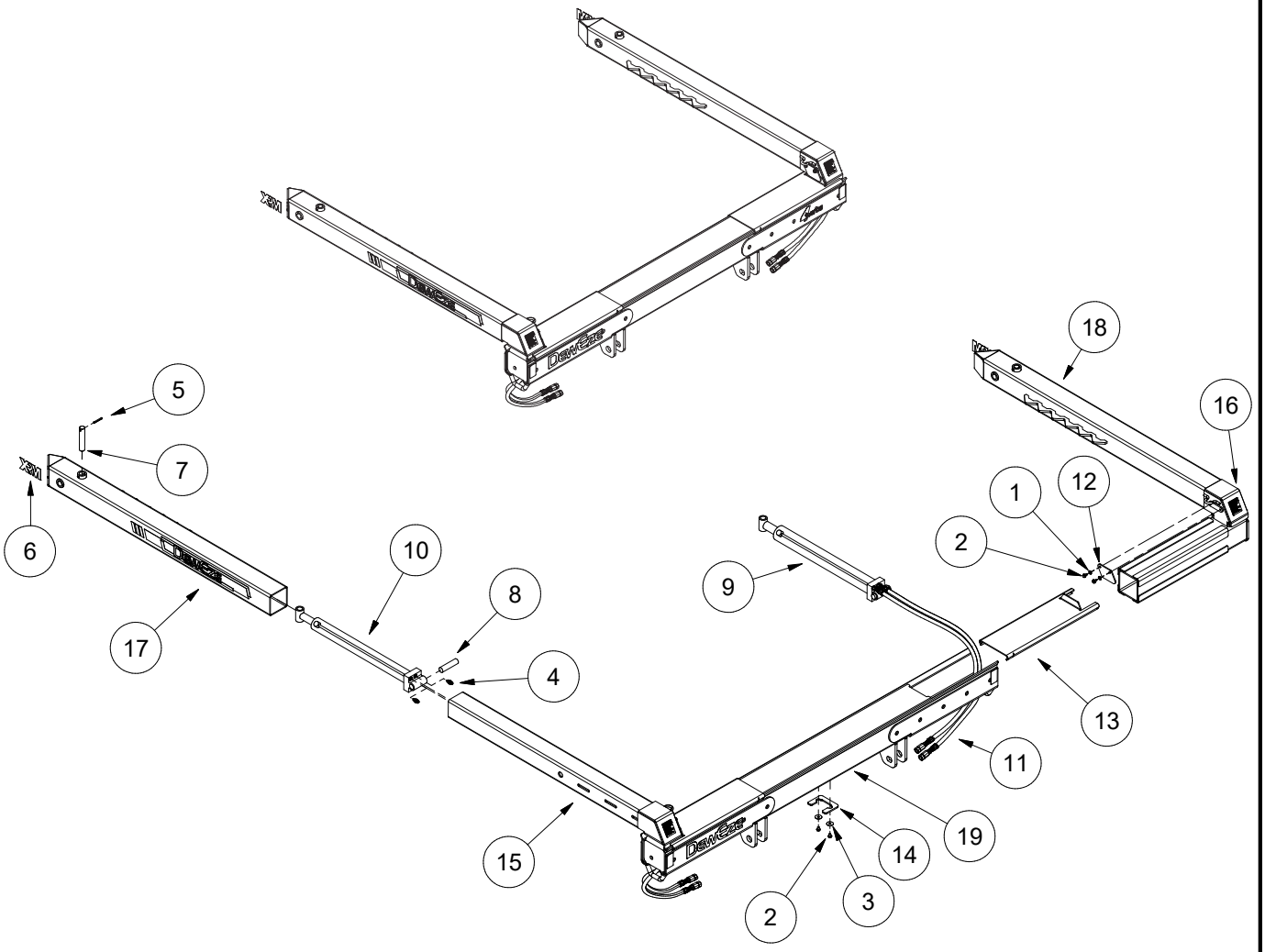

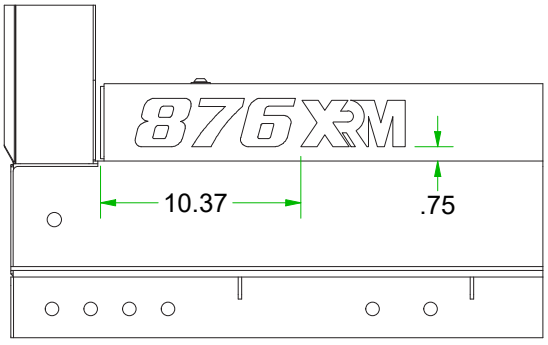

XRM DECAL

ITEM	QTY	PART #	DESCRIPTION
1	4	110069	Washer, 5/16" Flat Sae
2	6	110426	Bolt, 5/16-18 X 0.5, Wiz Flange
3	2	111155	Washer, 5/16 Flat, Large Dia. 1-1/4 Zinc
4	4	120665	Adapter, 6mj-4mb
5	2	200150	Roll Pin, 1/4 X 2
6	2	202115	Decal, Xrm, Red
7	2	210941	Cylinder Pin
8	2	210942	Floating Pin
9	1	220455	Extension Cylinder 2.5
10	1	220456	Extension Cylinder 2.0
11	1	223122	Hose Kit, Parallel Xrm
12	2	261213	Plate
13	2	261214	Shield, Crosstube
14	1	261384	Plate
15	1	266028	Kit, Parallel Arm, Xrm, Left
16	1	266029	Kit, Parallel Arm, Xrm, Right
17	1	266030	Kit, Ext. Arm, Parallel, Left
18	1	266031	Kit, Ext. Arm, Parallel, Right
19	1	266033	Kit, Crosstube, Parallel Xrm, 8--

900 PIVOT & SPIKE CROSSTUBE ARMS & HYDRAULICS

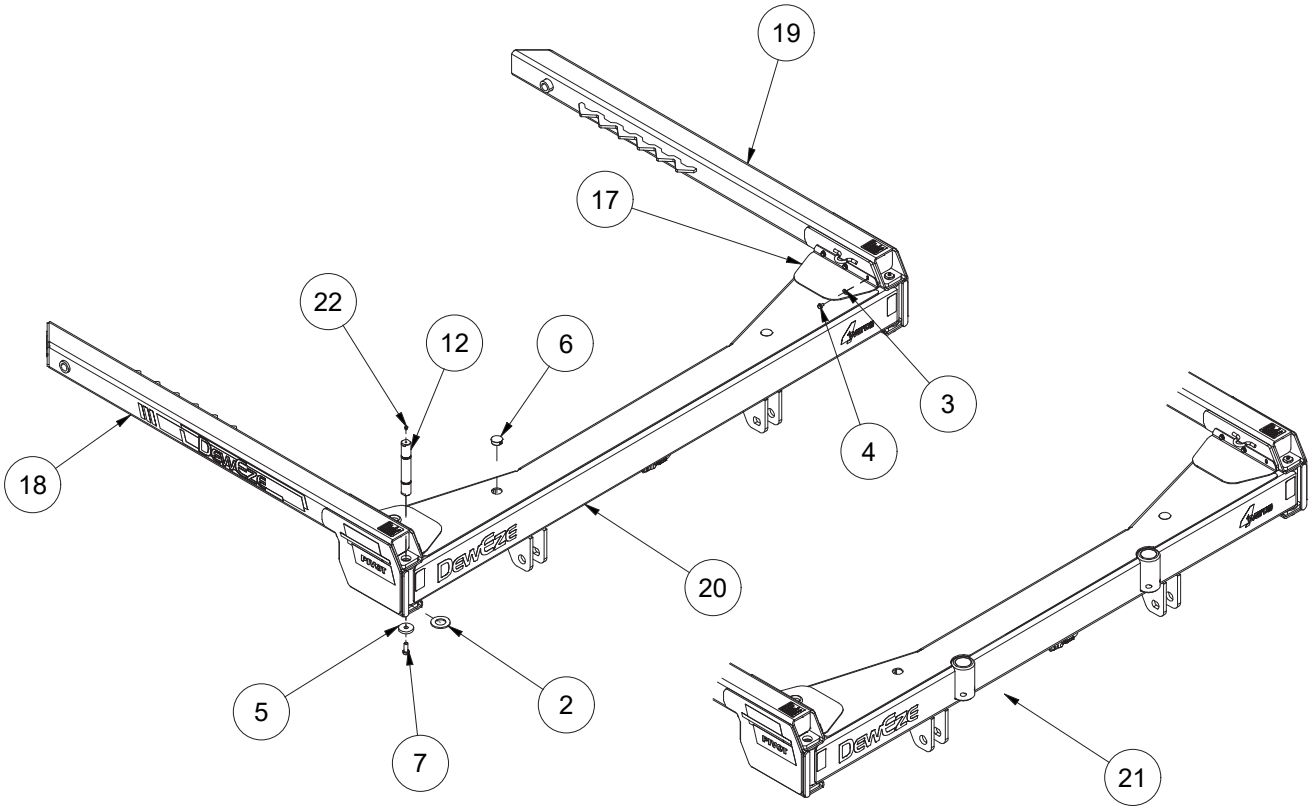

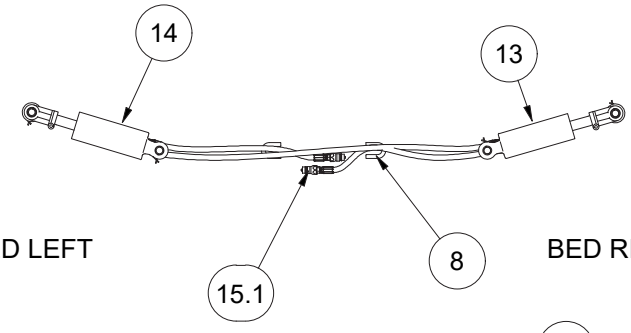

BED LEFT

BED RIGHT

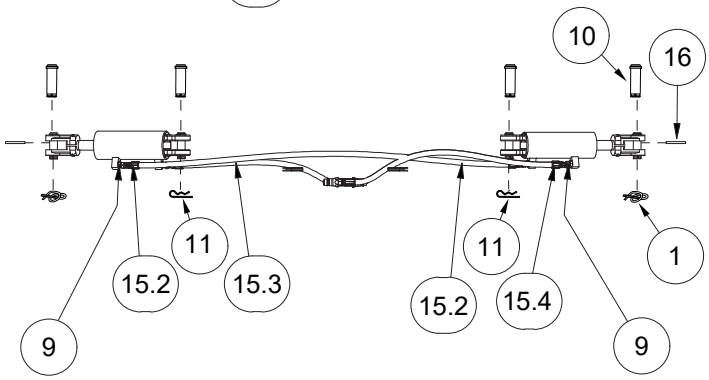

NOTES:
TORQUE 111211 TO 106 lb-ft

ITEM	QTY	PART #	DESCRIPTION
1	2	102122	Locking Cotter Ring, 1”
2	2	110041	Washer, 1-1/4” Flat SAE
3	6	110069	Washer, 5/16” Flat SAE
4	6	110426	Bolt, 5/16-18 X 0.5, Wiz Flange
5	2	110659	Washer, 1.95 X .531 X .3125
6	2	111039	Plug, Plastic, 1.375 Thick Panel Dome
7	2	111211	Bolt, 1/2-13 X 1.25, Gr8
8	2	112084	Rubber Seal, .50 X .25
9	4	120319	Adapter, 6mj-6mb
10	4	202059	Clevis Pin
11	2	202060	Clip, Clevis Pin
12	2	212065	Pin, Pivot Arm
13	1	223042	Pivot Cylinder, 3.0 X 5.0
14	1	223043	Pivot Cylinder, 3.25 X 5.0
15	1	223103	Hydraulic Hose Kit, Pivot 9--
15.1	2	120582	Coupler, Pioneer Male, ORB
15.2	1	220714	Hose, .375 X 66.0 6fjx/6fjx
15.3	1	220829	Hose, .375 X 32.0 6fjx/6-8mb
15.4	1	220830	Hose, .375 X 37.0 6fjx/6-8mb
16	2	260302	Shim Washer
17	2	261035	Shield, Pivot Arm
18	1	266001	Kit, Pivot Arm, Left
19	1	266002	Kit, Pivot Arm, Right
20	1	266008	Kit, Crosstube, Pivot
21	1	266010	Kit, Crosstube, Pivot Spike
22	2	510174	Grease Zerk, 1/4-28 ST

900 XRM PIVOT & SPIKE CROSSTUBE & ARMS

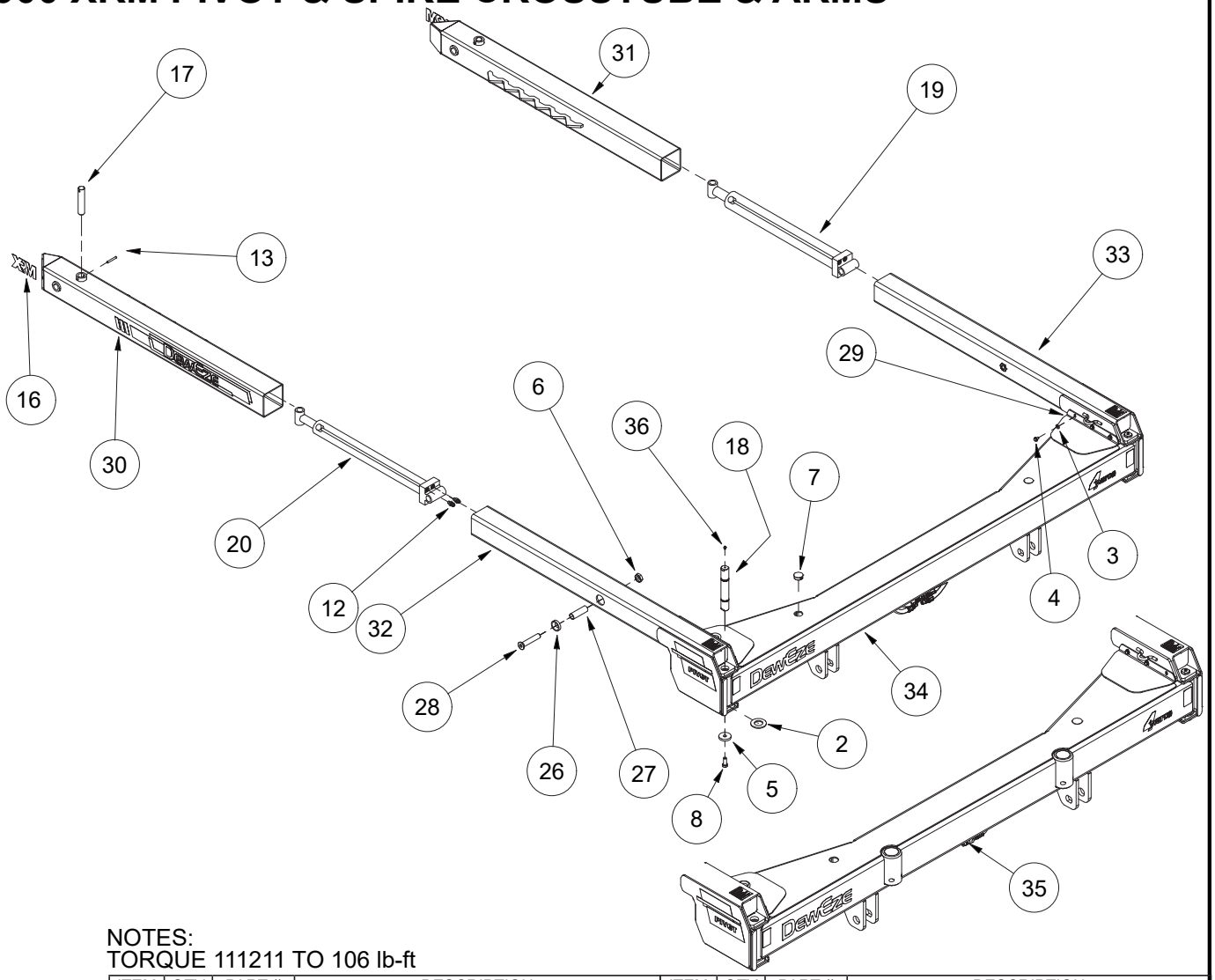

NOTES:
TORQUE 111211 TO 106 lb-ft

ITEM	QTY	PART #	DESCRIPTION	ITEM	QTY	PART #	DESCRIPTION
1	2	102122	Locking Cotter Ring, 1”	22	1	223043	Pivot Cylinder, 3.25 X 5.0
2	2	110041	Washer, 1-1/4” Flat SAE	23	1	223062	Hose Kit, Pivot Xrm, Short 7--
3	6	110069	Washer, 5/16” Flat SAE	23.1	2	220734	Hose, .375 X 76.0 6fjx/6fjx
4	6	110426	Bolt, 5/16-18 X 0.5, Wiz Flange	23.2	2	220737	Hose, .375 X 80.0 6fjx/6mj
5	2	110659	Washer, 1.95 X .531 X .3125	24	1	223103	Hydraulic Hose Kit, Pivot 9--
6	2	111036	Heavy Jamhexnut 3_4-10 UNC	24.1	2	120582	Coupler, Pioneer Male, ORB
7	2	111039	Plug, Plastic, 1.375 Thick Panel Dome	24.2	1	220714	Hose, .375 X 66.0 6fjx/6fjx
8	2	111211	Bolt, 1/2-13 X 1.25, Gr8	24.3	1	220829	Hose, .375 X 32.0 6fjx/6-8mb
9	4	112084	Rubber Seal, .50 X .25	24.4	1	220830	Hose, .375 X 37.0 6fjx/6-8mb
10	4	120319	Adapter, 6mj-6mb	25	2	260302	Shim Washer
11	1	120603	Adapter, 6mj-6mj	26	2	260348	Spacer, 1.75 X .375, 82° C’sink
12	4	120665	Adapter, 6mj-4mb	27	2	260349	Bushing, 1.0 X .78 X 3.125
13	2	200150	Roll Pin, 1/4 X 2	28	2	260350	Bolt, 3/4-10 X 4.05 FH SCHS
14	4	202059	Clevis Pin	29	2	261035	Shield, Pivot Arm
15	2	202060	Clip, Clevis Pin	30	1	266003	Kit, Ext. Arm, Pivot, Left,
16	2	202115	Decal, XRM, Red	31	1	266004	Kit, Ext. Arm, Pivot, Right,
17	2	210941	Cylinder Pin	32	1	266005	Kit, Pivot Arm, XRM, Left,
18	2	212065	Pin, Pivot Arm	33	1	266006	Kit, Pivot Arm, XRM, Right,
19	1	220455	Extension Cylinder 2.5	34	1	266008	Kit, Crosstube, Pivot
20	1	220456	Extension Cylinder 2.0	35	1	266010	Kit, Crosstube, Pivot Spike
21	1	223042	Pivot Cylinder, 3.0 X 5.0	36	2	510174	Grease Zerk, 1/4-28 ST

900 XRM PIVOT & SPIKE CYLINDERS & HYDRAULICS

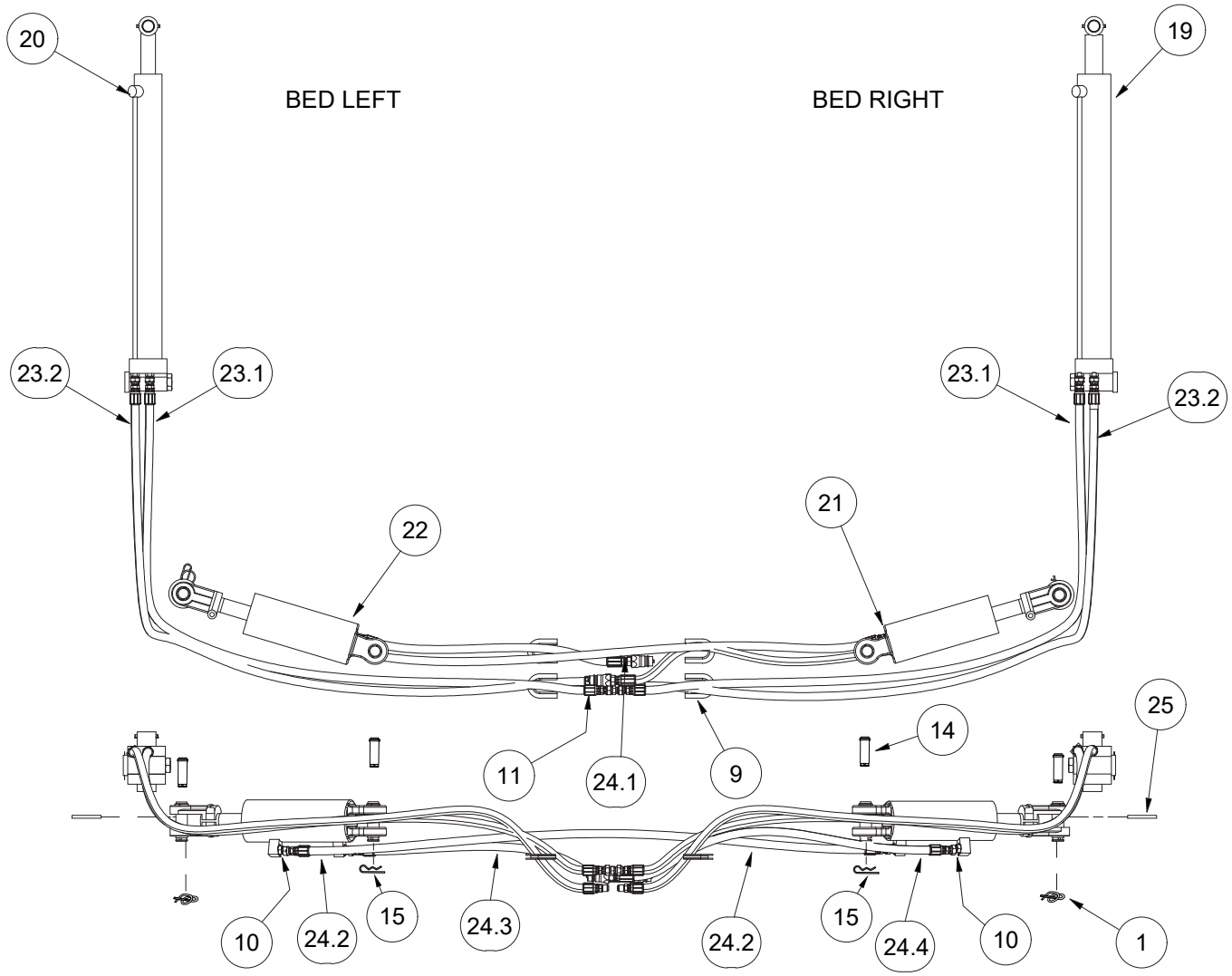

ITEM	QTY	PART #	DESCRIPTION	ITEM	QTY	PART #	DESCRIPTION
1	2	102122	Locking Cotter Ring, 1”	22	1	223043	Pivot Cylinder, 3.25 X 5.0
2	2	110041	Washer, 1-1/4” Flat SAE	23	1	223062	Hose Kit, Pivot XRM, Short 7--
3	6	110069	Washer, 5/16” Flat SAE	23.1	2	220734	Hose, .375 X 76.0 6fjx/6fjx
4	6	110426	Bolt, 5/16-18 X 0.5, Wiz Flange	23.2	2	220737	Hose, .375 X 80.0 6fjx/6mj
5	2	110659	Washer, 1.95 X .531 X .3125	24	1	223103	Hydraulic Hose Kit, Pivot 9--
6	2	111036	Heavy Jamhexnut 3_4-10 UNC	24.1	2	120582	Coupler, Pioneer Male, ORB
7	2	111039	Plug, Plastic, 1.375 Thick Panel Dome	24.2	1	220714	Hose, .375 X 66.0 6fjx/6fjx
8	2	111211	Bolt, 1/2-13 X 1.25, GR 8	24.3	1	220829	Hose, .375 X 32.0 6fjx/6-8mb
9	4	112084	Rubber Seal, .50 X .25	24.4	1	220830	Hose, .375 X 37.0 6fjx/6-8mb
10	4	120319	Adapter, 6mj-6mb	25	2	260302	Shim Washer
11	1	120603	Adapter, 6mj-6mj	26	2	260348	Spacer, 1.75 X .375, 82° C’sink
12	4	120665	Adapter, 6mj-4mb	27	2	260349	Bushing, 1.0 X .78 X 3.125
13	2	200150	Roll Pin, 1/4 X 2	28	2	260350	Bolt, 3/4-10 X 4.05 FH SCHS
14	4	202059	Clevis Pin	29	2	261035	Shield, Pivot Arm
15	2	202060	Clip, Clevis Pin	30	1	266003	Kit, Ext. Arm, Pivot, Left,
16	2	202115	Decal, XRM, Red	31	1	266004	Kit, Ext. Arm, Pivot, Right,
17	2	210941	Cylinder Pin	32	1	266005	Kit, Pivot Arm, XRM, Left,
18	2	212065	Pin, Pivot Arm	33	1	266006	Kit, Pivot Arm, XRM, Right,
19	1	220455	Extension Cylinder 2.5	34	1	266008	Kit, Crosstube, Pivot
20	1	220456	Extension Cylinder 2.0	35	1	266010	Kit, Crosstube, Pivot Spike
21	1	223042	Pivot Cylinder, 3.0 X 5.0	36	2	510174	Grease Zerk, 1/4-28 ST

900 PARALLEL CROSSTUBE & ARMS,

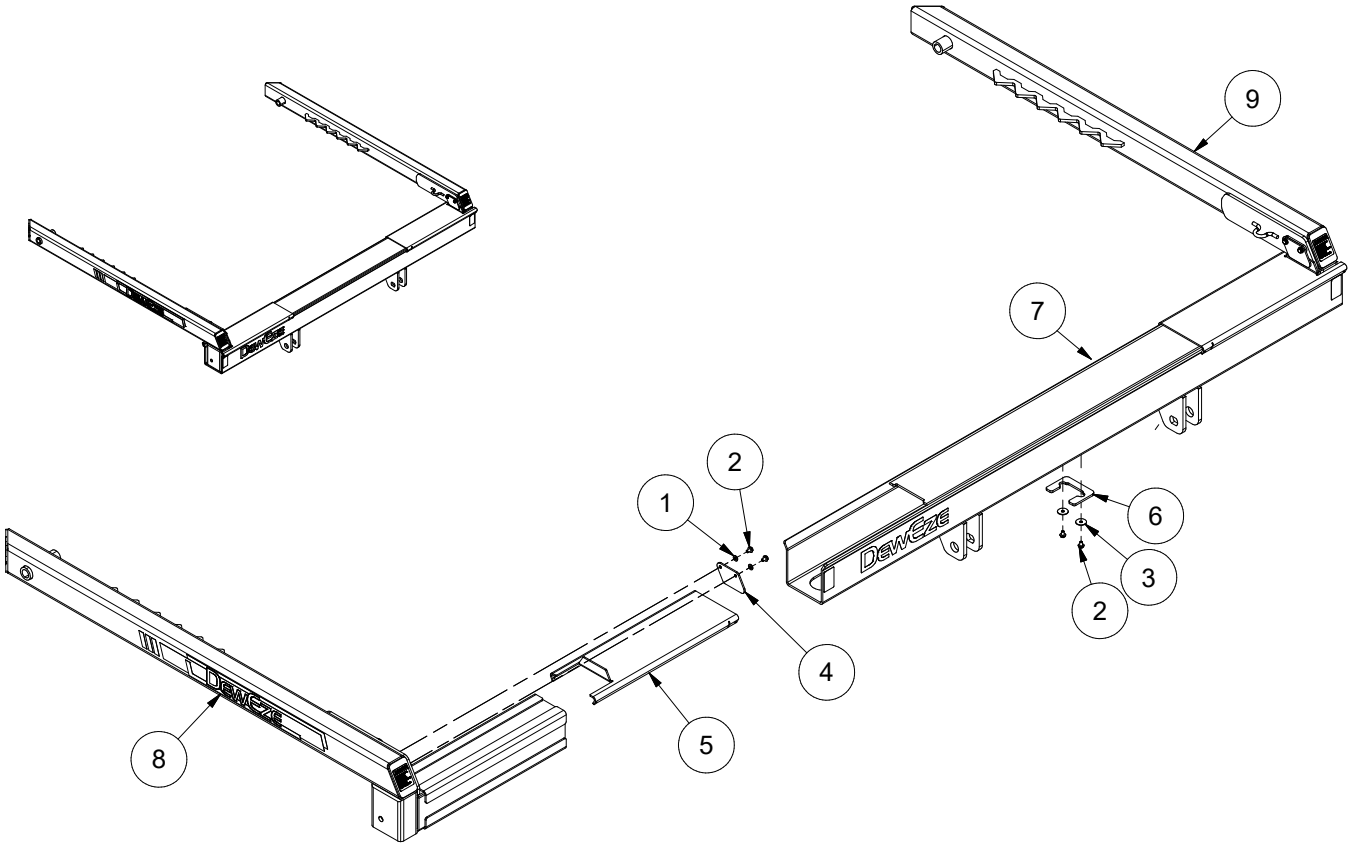

ITEM	QTY	PART #	DESCRIPTION
1	4	110069	Washer, 5/16" Flat Sae
2	6	110426	Bolt, 5/16-18 X 0.5, Wiz Flange
3	2	111155	Washer, 5/16 Flat, Large Dia. 1-1/4 Zinc
4	2	261213	Plate
5	2	261214	Shield, Crosstube
6	1	261384	Plate
7	1	266025	Kit, Crosstube, Parallel, 9--
8	1	266026	Kit, Parallel Arm, Left
9	1	266027	Kit, Parallel Arm, Right

900 PARALLEL XRM CROSSTUBE CYLINDERS & HYDRAULICS

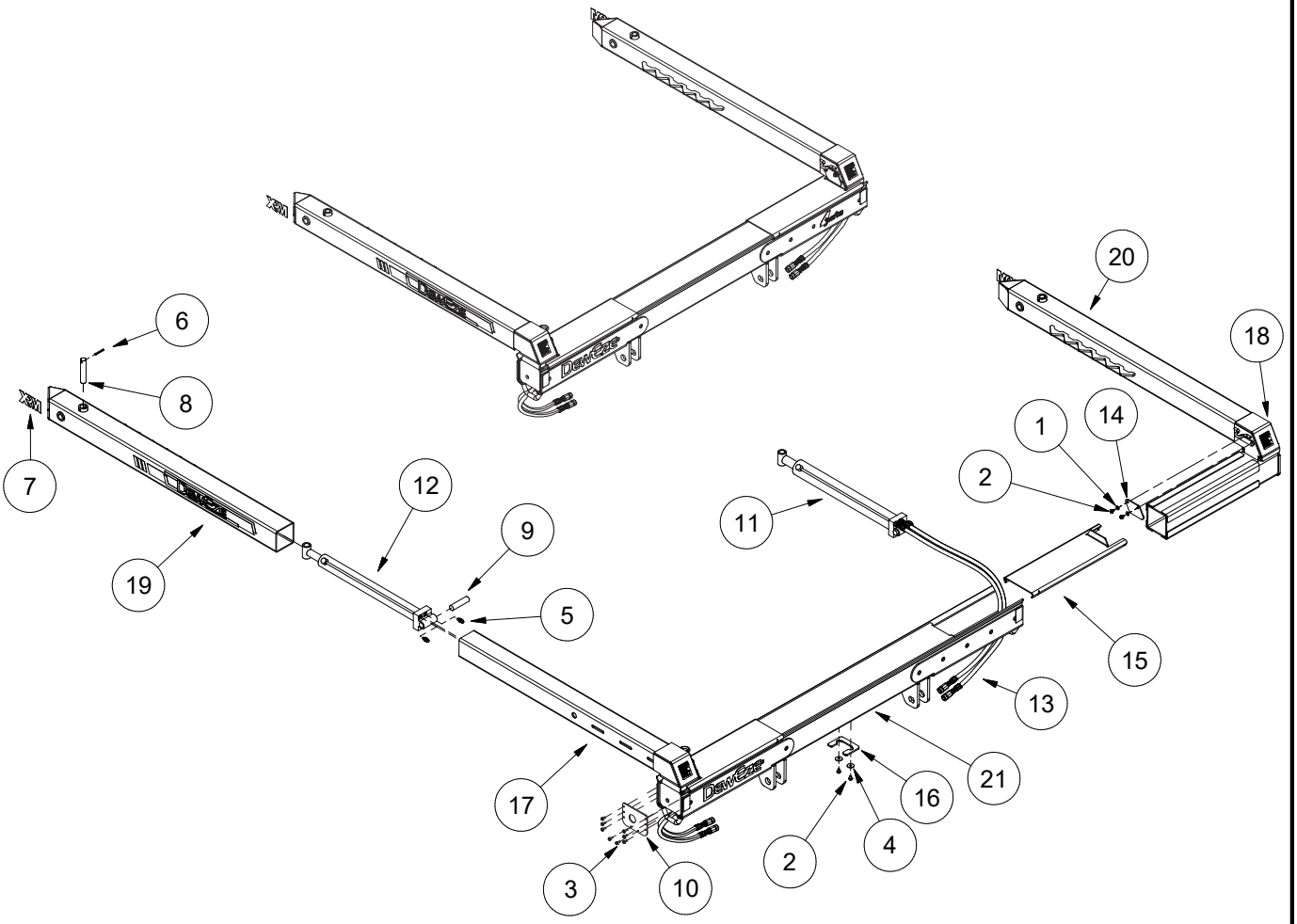

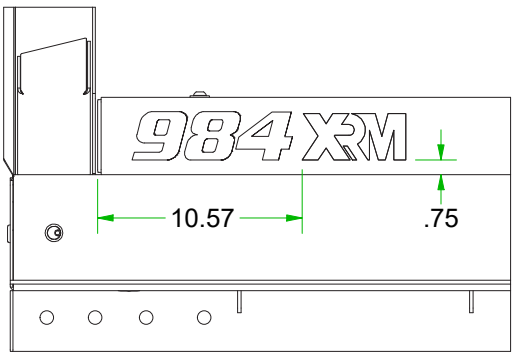

XRM DECAL

ITEM	QTY	PART #	DESCRIPTION
1	4	110069	Washer, 5/16" Flat Sae
2	6	110426	Bolt, 5/16-18 X 0.5, Wiz Flange
3	16	110794	Bolt, 5/16-18 X 0.75, Gr8 Blk Hex Flange
4	2	111155	Washer, 5/16 Flat, Large Dia. 1-1/4 Zinc
5	4	120665	Adapter, 6mj-4mb
6	2	200150	Roll Pin, 1/4 X 2
7	2	202115	Decal, Xrm, Red
8	2	210941	Cylinder Pin
9	2	210942	Floating Pin
10	2	211755	Crosstube Endcap
11	1	220455	Extension Cylinder 2.5
12	1	220456	Extension Cylinder 2.0
13	1	223122	Hose Kit, Parallel Xrm
14	2	261213	Plate
15	2	261214	Shield, Crosstube
16	1	261384	Plate
17	1	266028	Kit, Parallel Arm, Xrm, Left
18	1	266029	Kit, Parallel Arm, Xrm, Right
19	1	266030	Kit, Ext. Arm, Parallel, Left
20	1	266031	Kit, Ext. Arm, Parallel, Right
21	1	266032	Kit, Crosstube, Parallel Xrm, 9--

800/900 LIFT CYLINDERS & LINKAGE

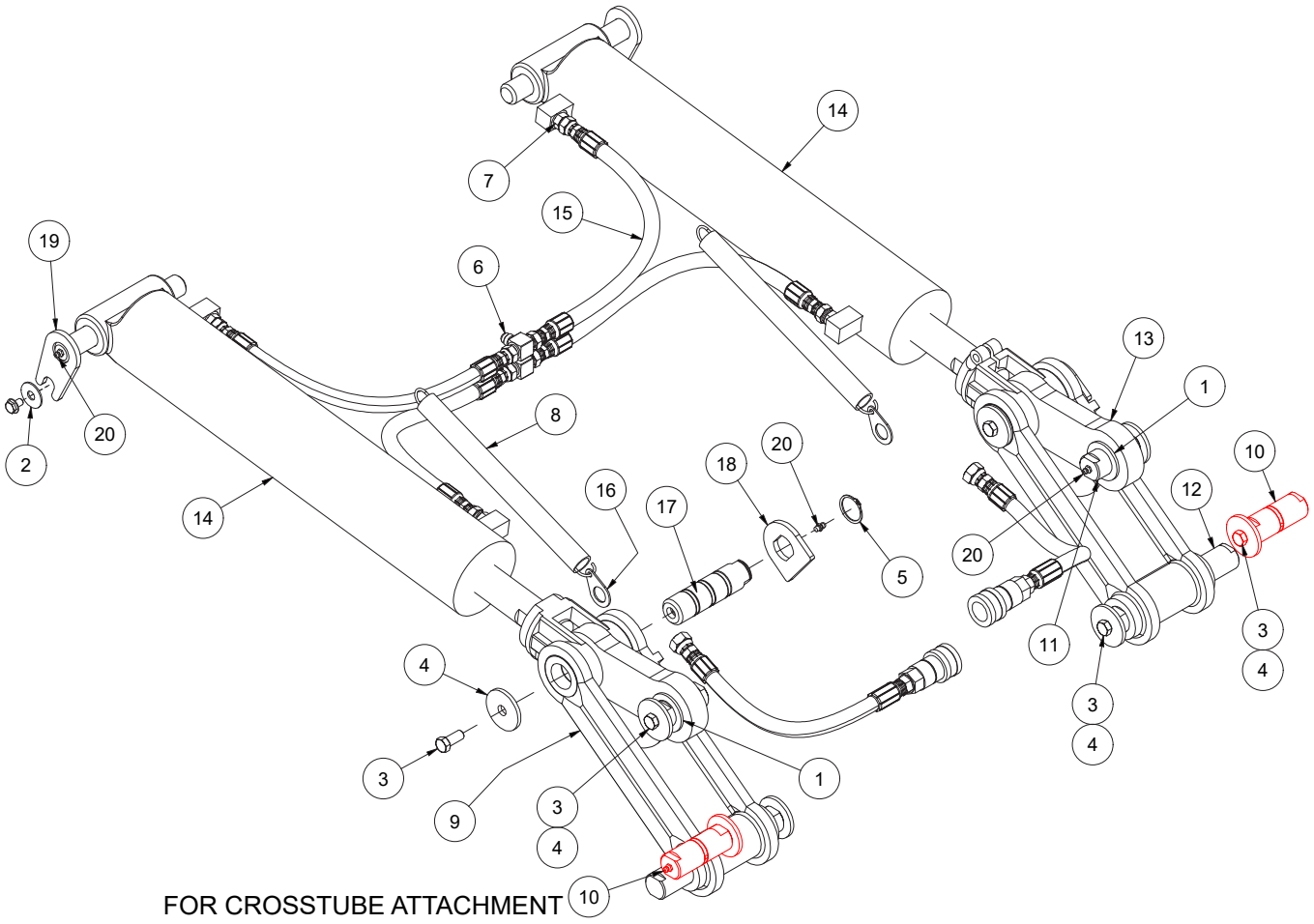

FOR CROSSTUBE ATTACHMENT

NOTES:
TORQUE 111216 TO 70 lb-ft

ITEM	QTY	PART #	DESCRIPTION
1	4	110336	Washer, 1-1/4" Flat Machine
2	2	110656	Washer, 3/8" Flat Special
3	8	111216	Bolt, 7/16-14 X 1, GR 8
4	8	111217	Washer, 7/16" X 2.0 X 0.187
5	2	111218	Snap Ring, 1.25"
6	2	120214	Adapter, 6mj-6mj-6mj
7	4	120319	Adapter, 6mj-6mb
8	2	202022	Spring, 1" O.d. X 12" L X .105 Wire
9	2	210935	Idler Arm, Machine DWG
10	2	212066	Pin, Crosstube Pivot
11	2	212067	Pin, Linkage
12	2	212068	Pin, Linkage
13	2	214002	Push Arm Assy, Dual Lift
14	2	222129	Cylinder, Lift
15	1	223100	Kit, Hydraulic Hoses, Common
16	2	260111	Mount, Hose Spring
17	2	261139	Pin
18	2	261140	Plate, Flag
19	2	265043	Weldment, Pin
20	8	510174	Grease Zerk, 1/4-28 ST

PART #	DESCRIPTION
220835	Seal Kit, Lift Cylinder 222129

264059 | REV: A

SQUEEZE CYLINDER, PARALLEL SSQ

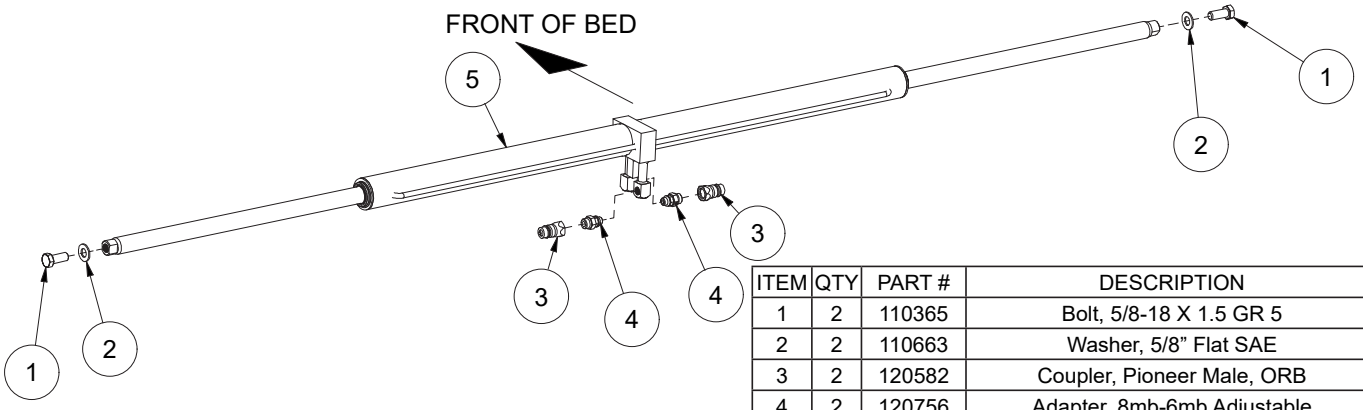

ITEM	QTY	PART #	DESCRIPTION
1	2	110365	Bolt, 5/8-18 X 1.5 GR 5
2	2	110663	Washer, 5/8” Flat SAE
3	2	120582	Coupler, Pioneer Male, ORB
4	2	120756	Adapter, 8mb-6mb Adjustable
5	1	223110	Cylinder, Synchronized 2x39.25, Side Port
	KIT	220056	Seal Kit, Squeeze Cylinder (Std/Sync)

264072 | REV:

800 PARALLEL SQUEEZE CYLINDER

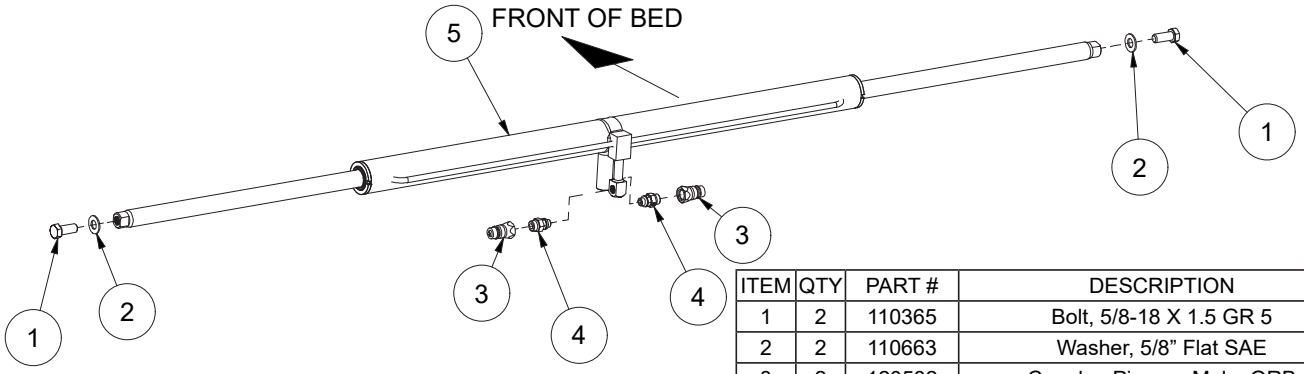

ITEM	QTY	PART #	DESCRIPTION
1	2	110365	Bolt, 5/8-18 X 1.5 GR 5
2	2	110663	Washer, 5/8” Flat SAE
3	2	120582	Coupler, Pioneer Male, ORB
4	2	120756	Adapter, 8mb-6mb Adjustable
5	1	223119	Cylinder, Squeeze 2 x 34, Side Port
	KIT	220056	Seal Kit, Squeeze Cylinder (Std/Sync)

264073 | REV:

900 PARALLEL SQUEEZE CYLINDER

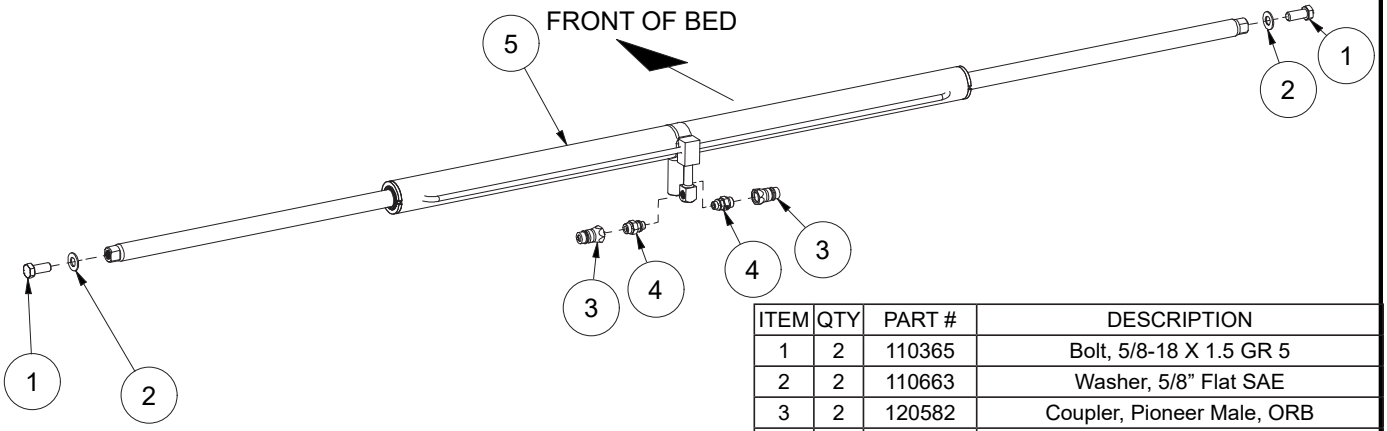

ITEM	QTY	PART #	DESCRIPTION
1	2	110365	Bolt, 5/8-18 X 1.5 GR 5
2	2	110663	Washer, 5/8” Flat SAE
3	2	120582	Coupler, Pioneer Male, ORB
4	2	120756	Adapter, 8mb-6mb Adjustable
5	1	223121	Cylinder, Squeeze 2 x 39.25, Side Port
	KIT	220056	Seal Kit, Squeeze Cylinder (Std/Sync)

800/900 PIVOT HOSE ROUTING & PARTS

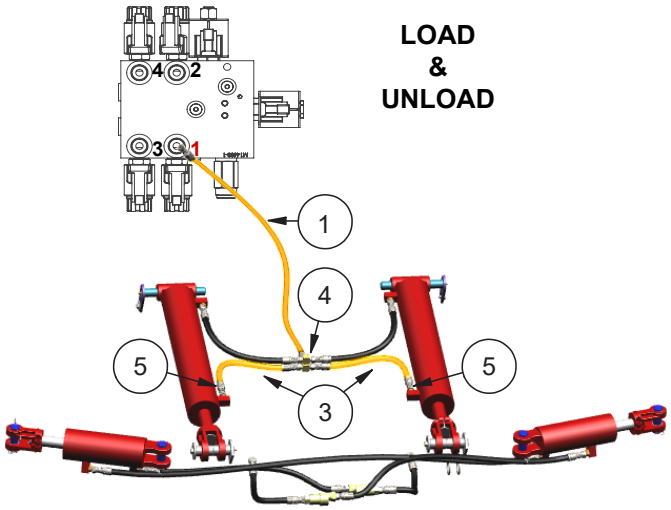

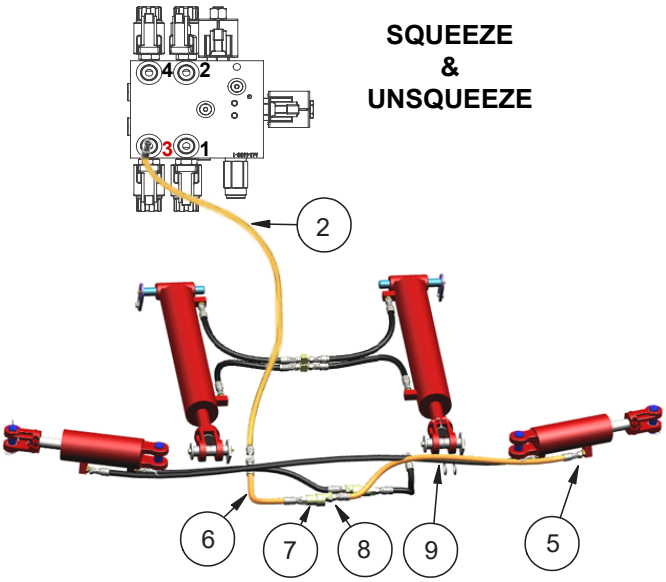

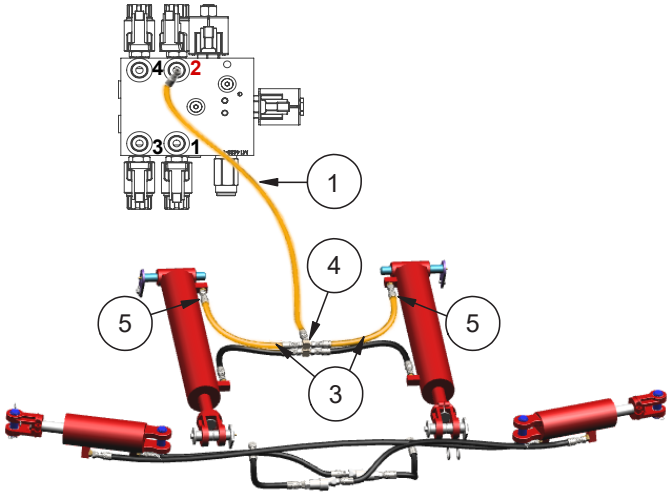

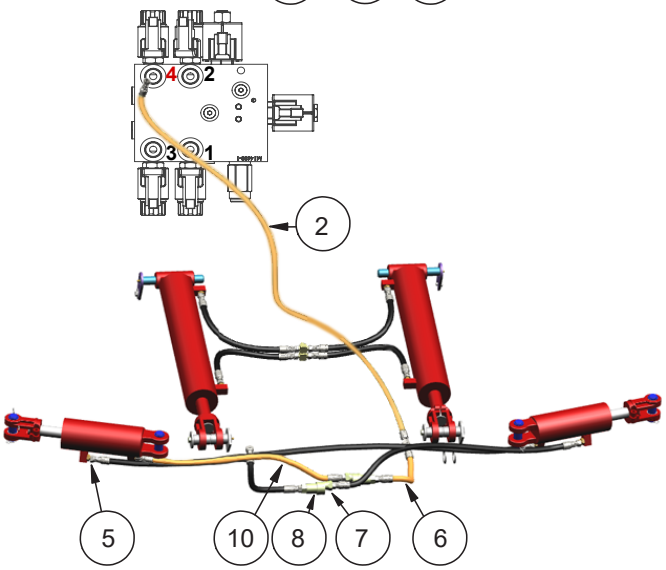

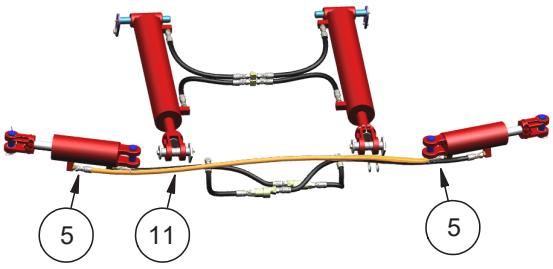

KITS & ASSEMBLIES		
223111	2x (1) & (2)	870 & 871
223101	2x (1) & (2)	876, 879, 976, 984
223112	2x (1) & (2)	988
223100	2x (7), 4x (3), 2x (6), 2x (4)	All Models
223104	2x (8), 1x (11), 1x (10), 1x (9)	800's
223103	2x (8), 1x (11), 1x (10), 1x (9)	900's

Hoses: Valve to Cylinder Area				
ITEM	QTY	870 & 871	876, 879, 976, 984	988
1	2	220837 (.375x86, 6fjx/6fjx)	220826 (.375x112, 6fjx/6fjx)	220839 (.375x137, 6fjx/6fjx)
2	2	220836 (.375x106, 6-6fjx/6-8mj)	220825 (.375x138, 6-6fjx/6-8mj)	220840 (.375x158, 6-6fjx/6-8mj)

800/900 Shared Items				
3	4	220824 (.375x17, 6fjx/6fjx)	Same	Same
4	2	120214 (Adapter 6mj-6mj-6mj)	Same	Same
5	8	120319 (Adapter, 6mj-6mb)	Same	Same
6	2	220834 (.375x19.5, 6-8fjx/6-8mb)	Same	Same
7	2	120755 (Coupler, F Pioneer, ORB)	Same	Same
8	2	120582 (Coupler, M Pioneer)	Same	Same

800 & 900 Specific Items				
ITEM	QTY	800's: 870,871,876 & 879		900's: 976, 984 & 988
9	1	220829 (.375x32, 6fjx/6-8mb)		220830 (.375x37, 6fjx/6-8mb)
10	1	220828 (.375x27, 6fjx/6-8mb)		220829 (.375x32, 6fjx/6-8mb)
11	1	220711 (.375x56, 6fjx/6fjx)		220714 (.375x66, 6fjx/6fjx)

800/900 PIVOT XRM HOSE ROUTING & PARTS

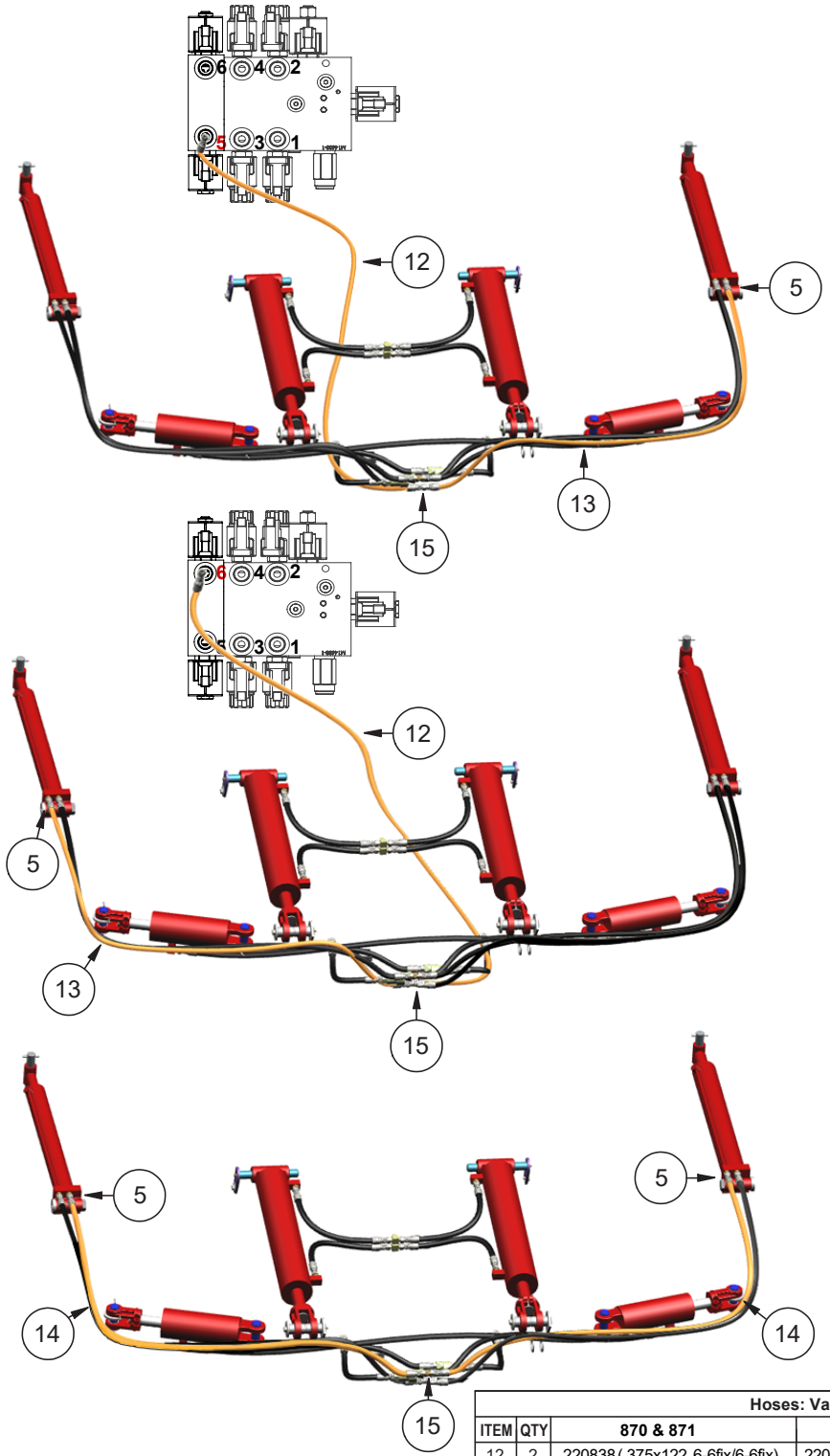

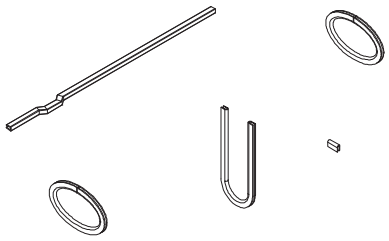

Edge Molding	
112084	Rubber Seal .50 x .25 (sold by the foot)

KITS & ASSEMBLIES		
223113	2x (12)	870 & 871
223102	2x (12)	876, 879, 976, 984
223114	2x (12)	988
223060	2x (13), 2x (14)	800's
223062	2x (13), 2x (14)	900's

Hoses: Valve to Cylinder Area				
ITEM	QTY	870 & 871	876, 879, 976, 984	988
12	2	220838 (.375x122, 6-6fjx/6-6fjx)	220827 (.375x143 6-6fjx/6-6fjx)	220841 (.375x163, 6-6fjx/6-6fjx)

800 & 900 Specific Items				
ITEM	QTY	800's: 870,871,876 & 879		900's: 976, 984 & 988
13	2	220735 (.375x69, 6-6fjx/6-6mj)		220737 (.375x80, 6-6fjx/ 6-6mj)
14	2	220732 (.375x65, 6-6fjx/6-6fjx)		220734 (.375x76, 6-6fjx/6-6fjx)
15	4	120603 (Adapter, 6mj/6mj)		Same

800/900 PARALLEL HOSE ROUTING & PARTS

LOAD & UNLOAD

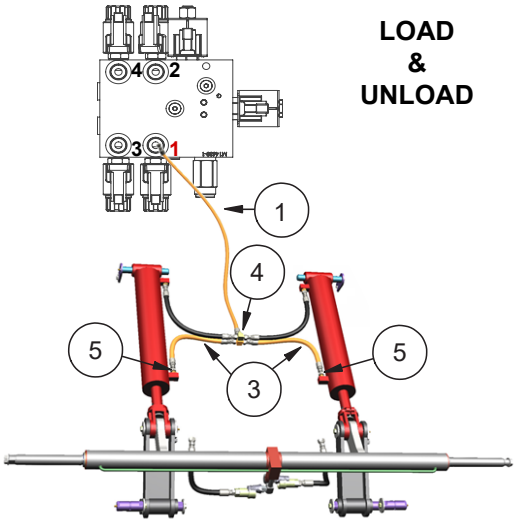

SQUEEZE & UNSQUEEZE

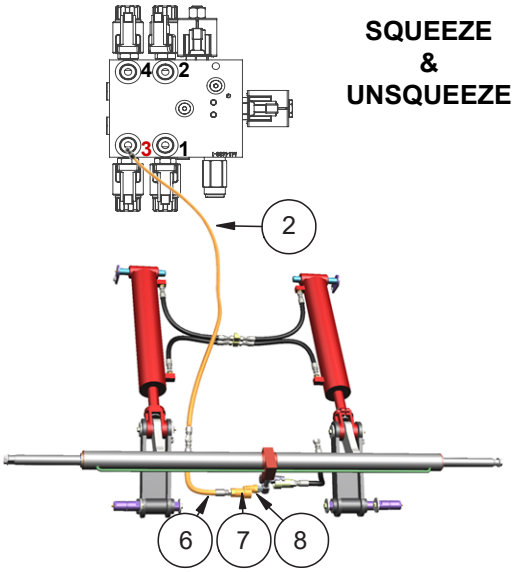

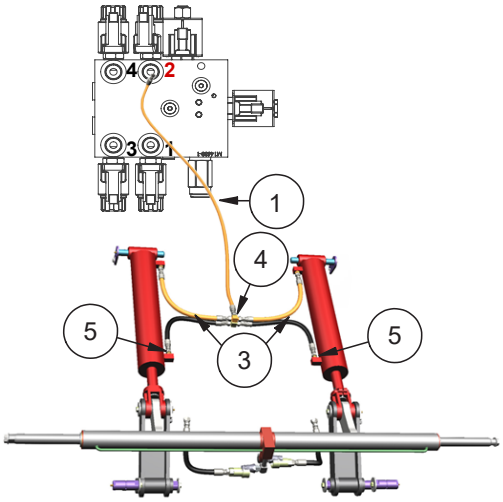

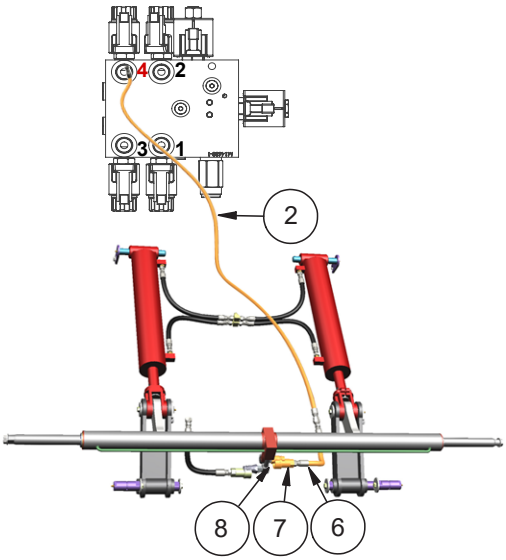

KITS & ASSEMBLIES		
223111	2x (1) & (2)	870 & 871
223101	2x (1) & (2)	876, 879, 976, 984
223112	2x (1) & (2)	988
223100	2x (7), 4x (3), 2x (6), 2x (4)	All Models

Hoses: Valve to Cylinder Area				
ITEM	QTY	870 & 871	876, 879, 976, 984	988
1	2	220837 (.375x86, 6fjx/6fjx)	220826 (.375x112, 6fjx/6fjx)	220839 (.375x137, 6fjx/6fjx)
2	2	220836 (.375x106, 6-6fjx/6-8mj)	220825 (.375x138, 6-6fjx/6-8mj)	220840 (.375x158, 6-6fjx/6-8mj)

800/900 Shared Items				
3	4	220824 (.375x17, 6fjx/6fjx)	Same	Same
4	2	120214 (Adapter 6mj-6mj-6mj)	Same	Same
5	8	120319 (Adapter, 6mj-6mb)	Same	Same
6	2	220834 (.375x19.5, 6-8fjx/6-8mb)	Same	Same
7	2	120755 (Coupler, F Pioneer, ORB)	Same	Same
8	2	120582 (Coupler, M Pioneer)	Same	Same

800/900 PARALLEL XRM HOSE ROUTING & PARTS

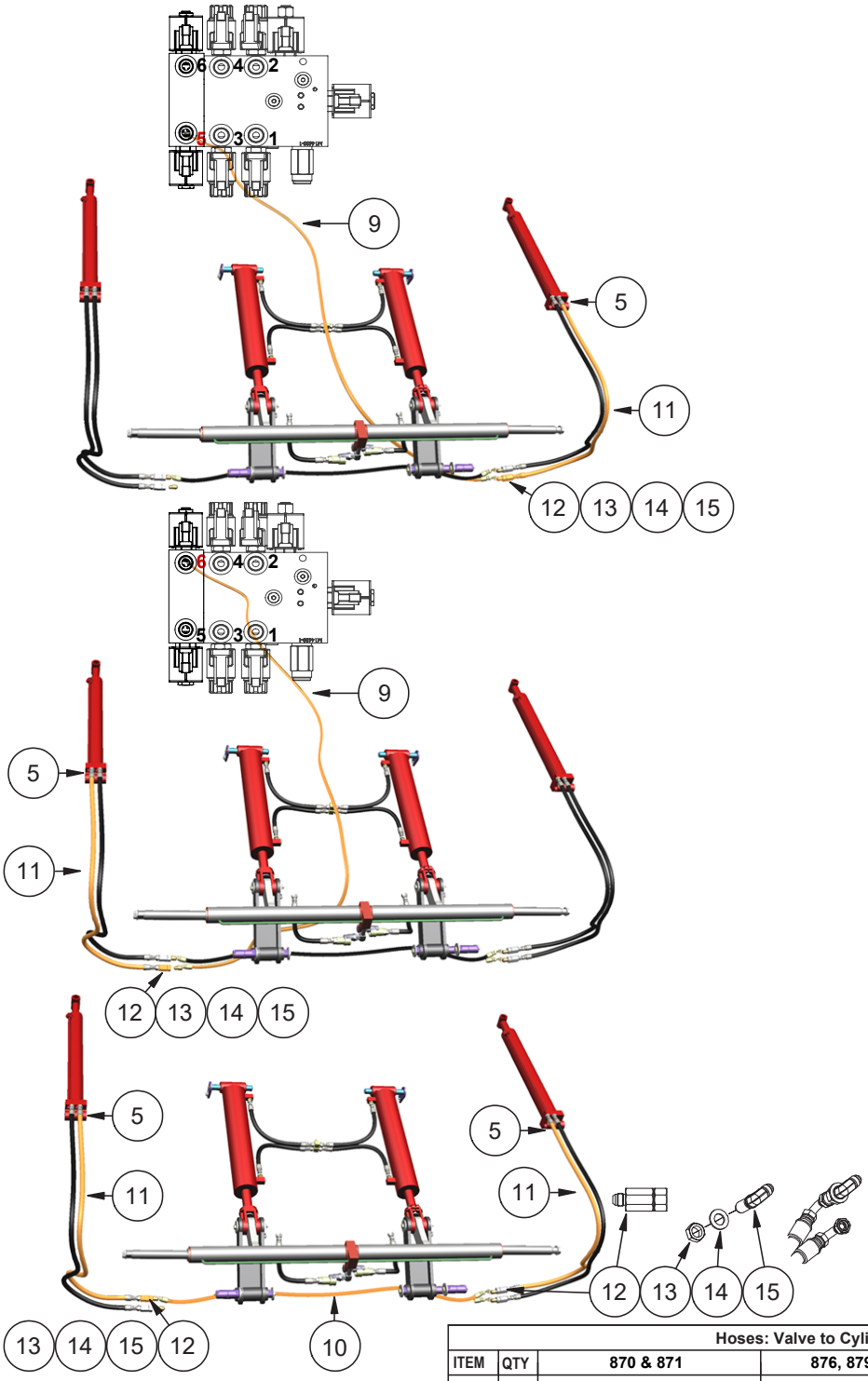

Hoses: Valve to Cylinder Area				
ITEM	QTY	870 & 871	876, 879, 976, 984	988
9	2	220625 (.375x148, 6fjx/6fjx 90m)	220627 (.375x174, 6fjx/6fjx 90m)	220629 (.375x200, 6fjx/6fjx 90m)

800 & 900 Shared Items				
10	1	220845 (.375x70, 6fjx/6fjx 90m)	Same	Same
11	4	220846 (.375x56, 6fjx/6fjx)	Same	Same
12	4	120768 Swivel Adapter (6fj/6mj)	Same	Same
13	4	120292 Bulkhead Locknut -6	Same	Same
14	4	111263 Shim, (1"x.563"x.075")	Same	Same
15	4	120274 Adapter (6mj/6mj 90)	Same	Same

KITS & ASSEMBLIES		
223116	2ea.(9) 1ea.(10) 4ea.(13) 4ea.(14) 4ea.(15)	870 & 871
223117	2ea.(9) 1ea.(10) 4ea.(13) 4ea.(14) 4ea.(15)	876, 879, 976, 984
223118	2ea.(9) 1ea.(10) 4ea.(13) 4ea.(14) 4ea.(15)	988
223122	4ea. (11), 4ea. (12)	All Models

800/900 3RD BANK ROUTING OPTIONS

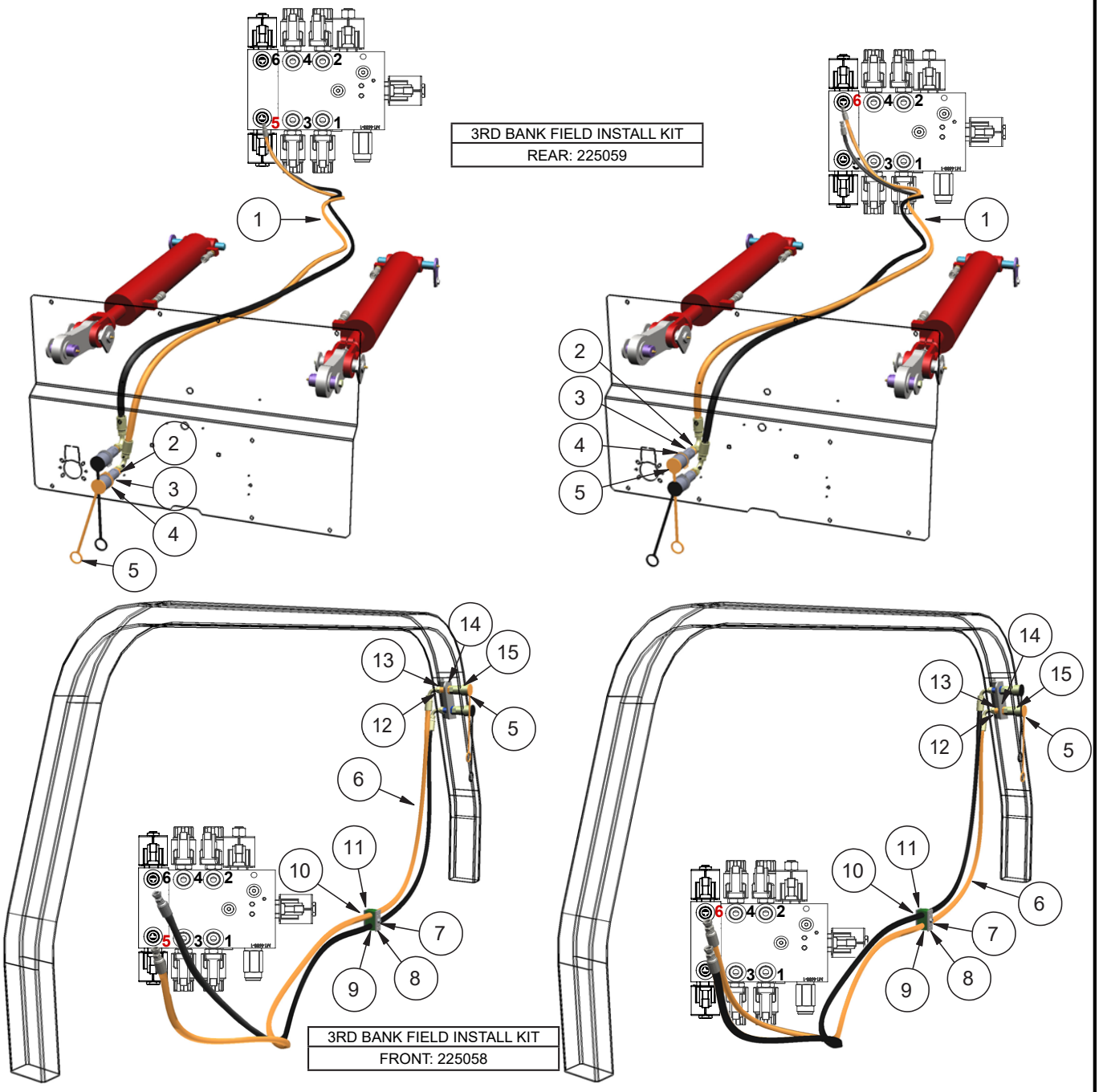

PARTS LIST				PARTS LIST			
ITEM	QTY	PART #	DESCRIPTION	ITEM	QTY	PART #	DESCRIPTION
1	2	220842	Hose, .50 x 183.0 8-6FJX/8FJX90	9	1	820097	Clamp/hose Clamp, Pair
2	2	120277	Adapter, 8mj-8mb	10	1	110378	Bolt, 5/16-18 X 2 Hhcs Gr 5 Zinc
3	2	120581	Coupler, Pioneer Female, ORB	11	2	820098	Cover Plate, Hose Clamp
4	4	120583	Snap Ring, ORB Pioneer Coupler	12	2	120750	Bulkhead Adapter, 8mb-8mj
5	2	420051	Dust Plug, Pioneer Coupler	13	2	120577	Bulkhead Locknut, -8
6	2	220843	Hose, .50 x 110.0 8-6FJX/8FJX90M	14	1	261302	Bracket, Aux Hose - Front
7	1	110606	Nut, 5/16-18, Wiz Flng	15	2	120755	Coupler, Pioneer, Female, ORB
8	1	820096	Base Plate, Hose Clamp				

Flatbed Non-Proportional Hydraulic Schematic

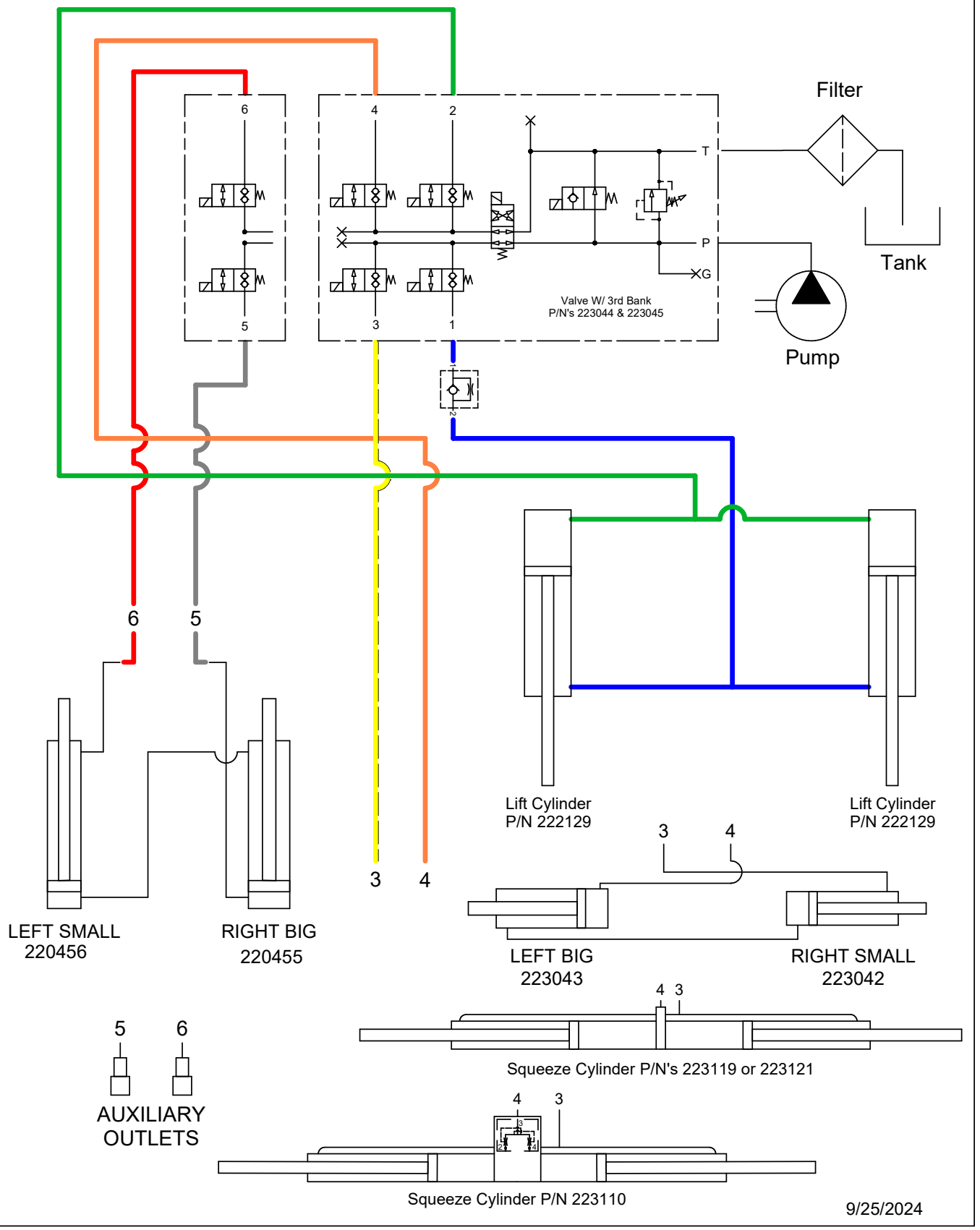

800/900 HYDRAULIC VALVE & 3RD BANK

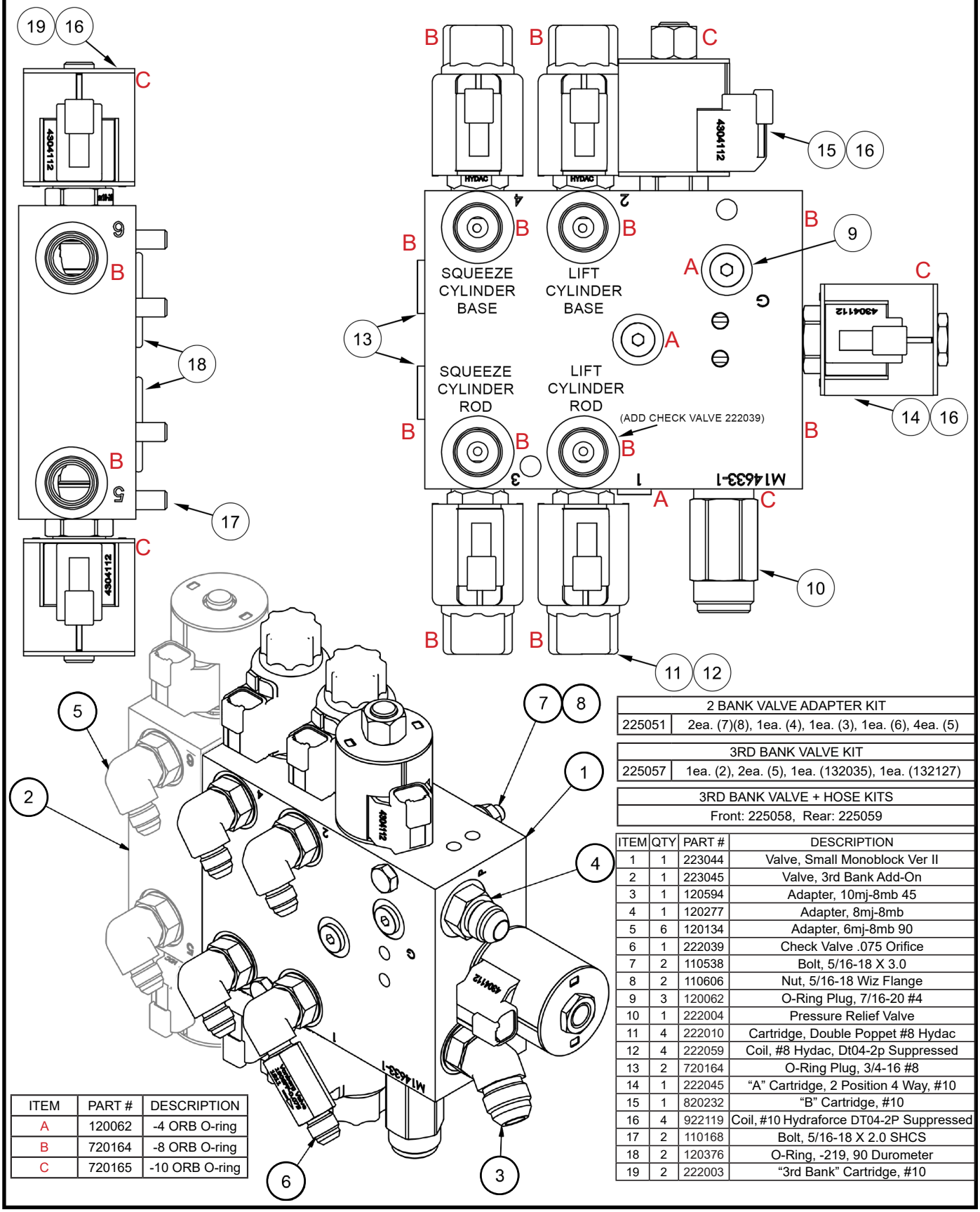

ITEM	PART #	DESCRIPTION
A	120062	-4 ORB O-ring
B	720164	-8 ORB O-ring
C	720165	-10 ORB O-ring

2 BANK VALVE ADAPTER KIT	
225051	2ea. (7)(8), 1ea. (4), 1ea. (3), 1ea. (6), 4ea. (5)

3RD BANK VALVE KIT	
225057	1ea. (2), 2ea. (5), 1ea. (132035), 1ea. (132127)

3RD BANK VALVE + HOSE KITS
Front: 225058, Rear: 225059

ITEM	QTY	PART #	DESCRIPTION
1	1	223044	Valve, Small Monoblock Ver II
2	1	223045	Valve, 3rd Bank Add-On
3	1	120594	Adapter, 10mj-8mb 45
4	1	120277	Adapter, 8mj-8mb
5	6	120134	Adapter, 6mj-8mb 90
6	1	222039	Check Valve .075 Orifice
7	2	110538	Bolt, 5/16-18 X 3.0
8	2	110606	Nut, 5/16-18 Wiz Flange
9	3	120062	O-Ring Plug, 7/16-20 #4
10	1	222004	Pressure Relief Valve
11	4	222010	Cartridge, Double Poppet #8 Hydac
12	4	222059	Coil, #8 Hydac, Dt04-2p Suppressed
13	2	720164	O-Ring Plug, 3/4-16 #8
14	1	222045	“A” Cartridge, 2 Position 4 Way, #10
15	1	820232	“B” Cartridge, #10
16	4	922119	Coil, #10 Hydraforce DT04-2P Suppressed
17	2	110168	Bolt, 5/16-18 X 2.0 SHCS
18	2	120376	O-Ring, -219, 90 Durometer
19	2	222003	“3rd Bank” Cartridge, #10

800/900 VALVE KIT, NON-PROPORTIONAL 2 BANK

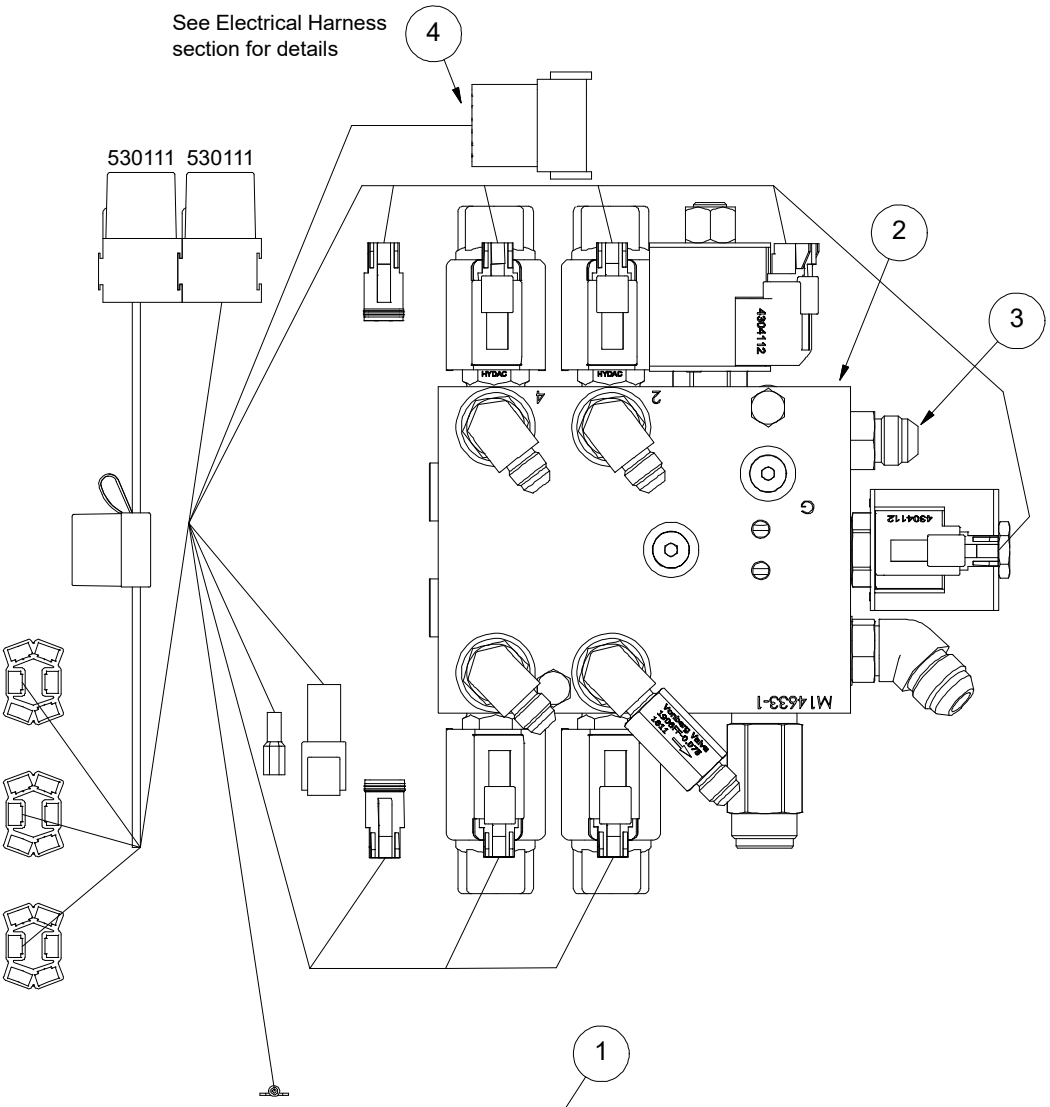

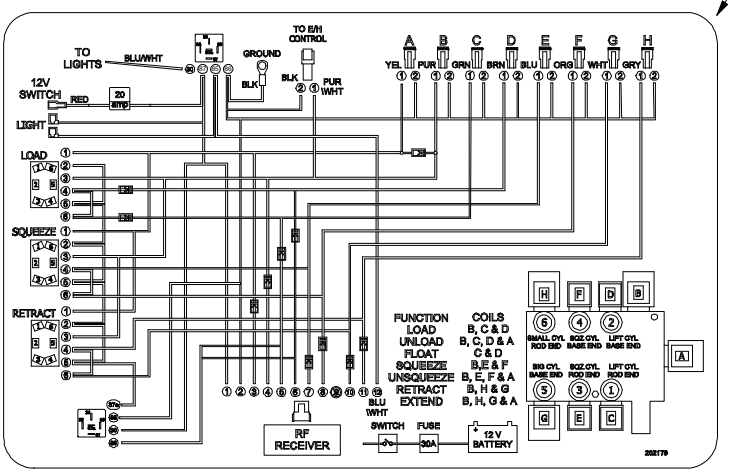

Parts List			Kit: 225056
ITEM	QTY	PART #	DESCRIPTION
1	1	202179	Decal, Wiring Diagram, Non-Prop. Valve
2	1	223044	Flatbed Valve, Small, Monoblock Ver II
3	1	225051	Adapter Kit, Non-Proportional 2 Bank
4	1	232239	Harness, Fluid-Tech Valve

HYDRAULIC RESERVOIR & FILTER

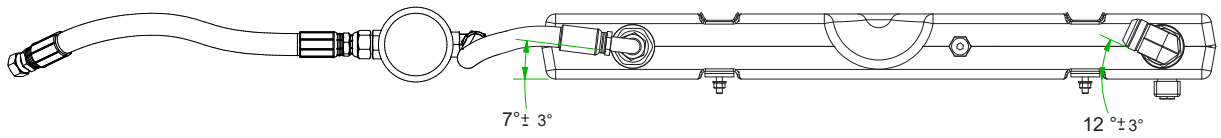

REF. Reservoir Assembly page for further parts breakdown. 223099_

If converting from *outdated* 3-part filter to *current* spin-on filter/filter head, use the new fitler head as a template to drill a hole in the mounting bracket.

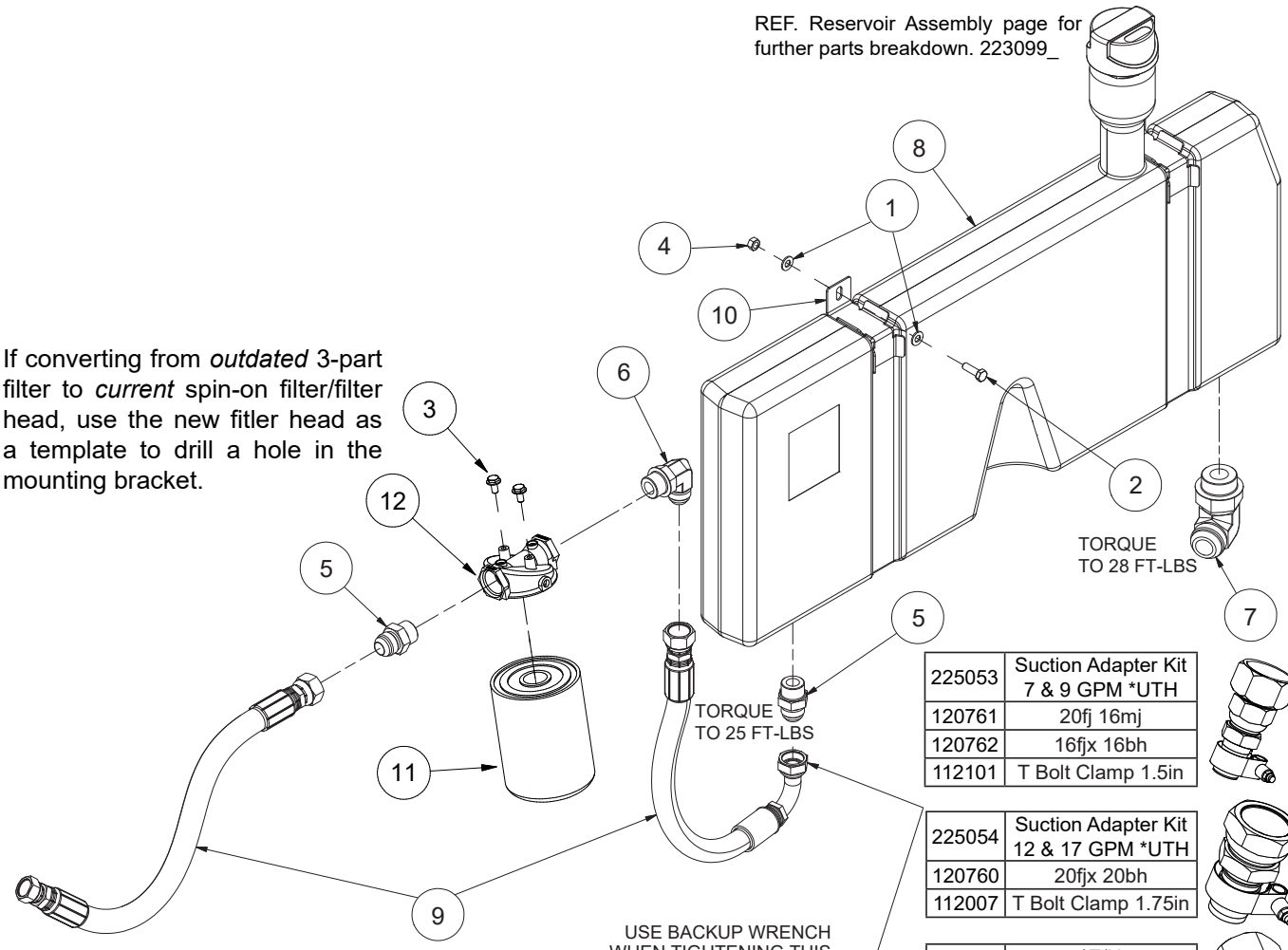

225053	Suction Adapter Kit 7 & 9 GPM *UTH
120761	20fj 16mj
120762	16fjx 16bh
112101	T Bolt Clamp 1.5in

225054	Suction Adapter Kit 12 & 17 GPM *UTH
120760	20fjx 20bh
112007	T Bolt Clamp 1.75in

112136	*E/H Clamp, 3/4" T-Bolt
120764	12fjx-12hb
120763	20fj-12mj



Outdated filter 223105 has been reverted to the same filter used in legacy Deweze beds.

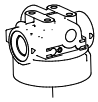

222121 Outdated Filter Head

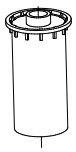

222119 Outdated Filter Element

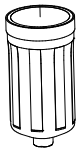

222120 Outdated Filter Housing

ITEM	QTY	PART #	DESCRIPTION
1	4	110069	Washer, 5/16" Flat Sae
2	2	110423	Bolt, 5/16-18 X 1.0
3	2	110434	Bolt, 1/4-20 X 0.5, Wiz Flange
4	2	110608	Nut, 5/16-18
5	2	120254	Adapter, 12mj-12mb
6	1	120257	Adapter, 12mj-12mb90
7	1	120404	Adapter, 20mj-20mb90
8	1	223099	Reservoir Assembly, Hydraulic
9	1	223108	Kit, Hydraulic Hoses, Return
10	2	261310	Bracket, Hyd Tank Mount
11	1	720043	Filter, 10 Micron
12	1	122034	Head, Spin-On Filter, -12sae

RESERVOIR ASSEMBLY

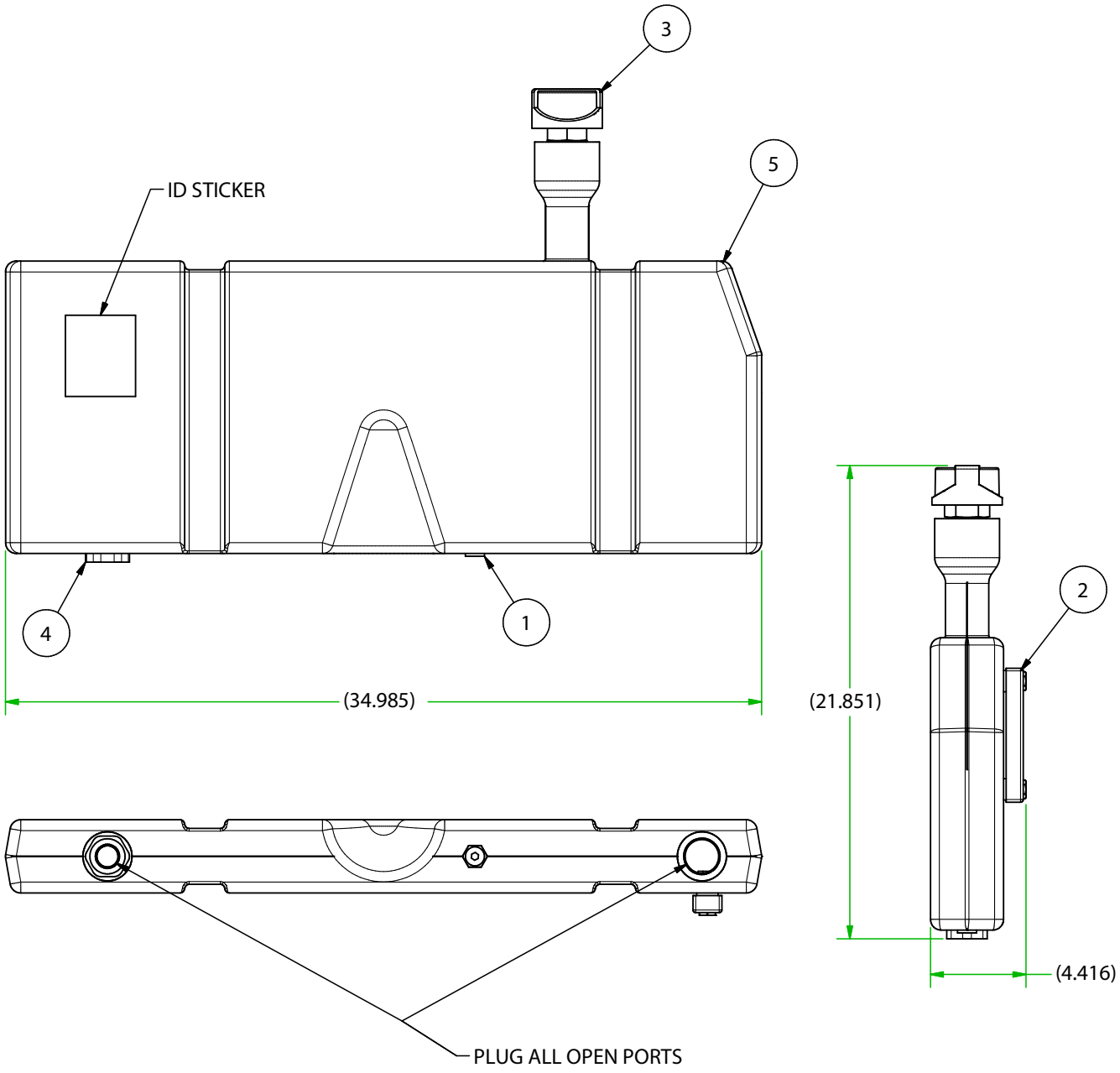

Parts List			Kit: 223099
ITEM	QTY	PART #	DESCRIPTION
1	1	120526	Plug, 8mb, Internal Hex Head
2	1	222115	Sight Glass
3	1	222116	Cap, Breather
4	1	222117	Diffuser
5	1	222118	Reservoir, Hydraulic, Service

800/900 VALVE SWITCHES KIT

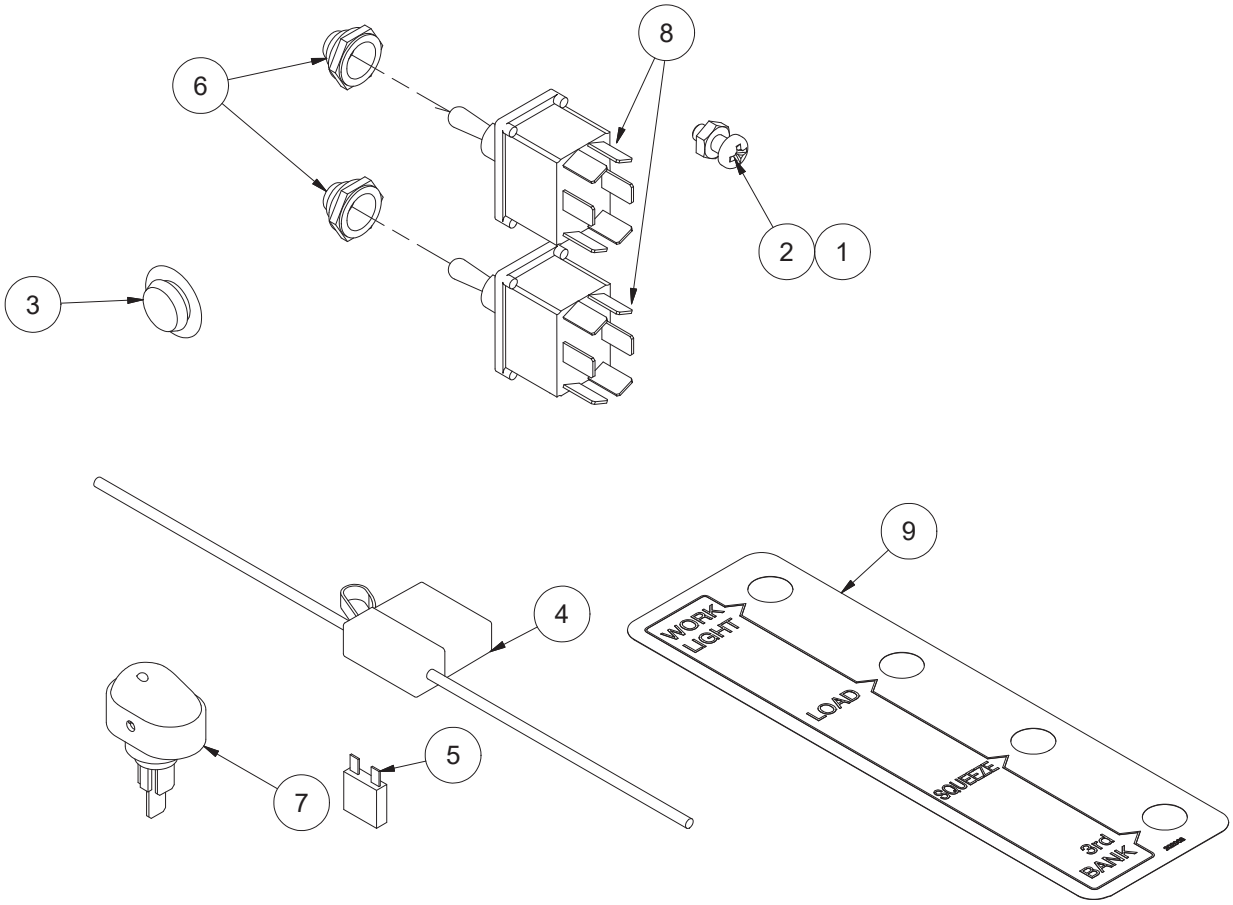

Non-Kit Switches

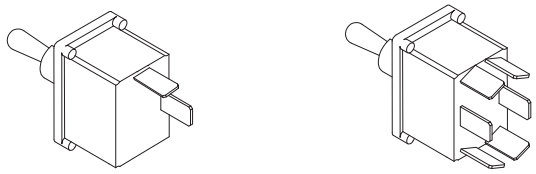

QTY	PART #	DESCRIPTION
1	132135	Work Light Switch, Toggle, SPST, On-Off
1	132134	AUX 3rd Bank, DPDT, On-Off-On
1	132127	XRM 3rd Bank, Momentary, (On)-Off-(On)

Parts List			Kit: 235047
ITEM	QTY	PART #	DESCRIPTION
1	1	110119	Nut, 10-24 Lock
2	1	110264	Bolt, 10-24 X .5 Stainless, Phillips
3	2	110753	Plug, 1/2" Button Plastic
4	1	132001	Fuse Holder, Atc, 14 Ga., Mini
5	1	132002	Fuse, Mini 30 Amp
6	2	132035	Switch Boot
7	1	132044	Switch, SPST, Rocker LED
8	2	132127	Switch, Momentary (On)-Off-(On)
9	1	202003	Decal, Switch Identification

800/900 ELECTRICAL HARNESSES

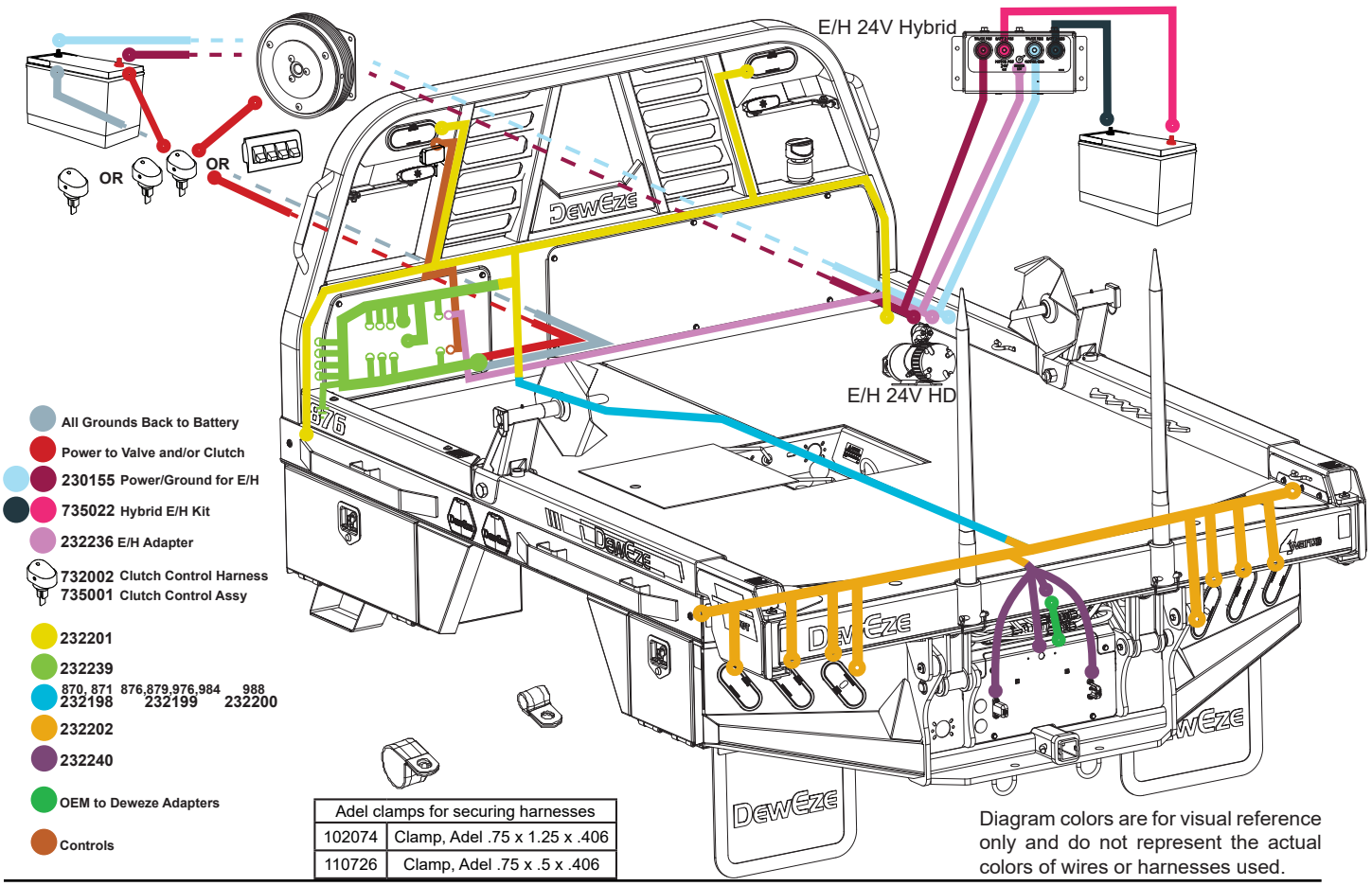

Adel clamps for securing harnesses	
102074	Clamp, Adel .75 x 1.25 x .406
110726	Clamp, Adel .75 x .5 x .406

Diagram colors are for visual reference only and do not represent the actual colors of wires or harnesses used.

All grounds must tie to the negative battery terminal. 800/900 series beds have a special grounded bolt near the driver's side headache rack for easy grounding.

Power is routed from the battery to switches in the cab, then one to clutch and one to valve.

EH Battery & Ground 2ga cable

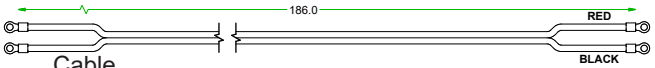

Cable
230155

EH Battery & Ground 2ga cable

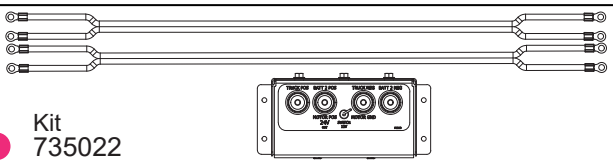

Kit
735022

EH Adapter

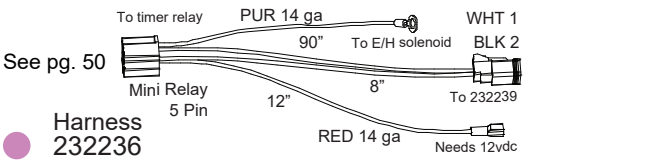

Harness
232236

The clutch has a single wire that must go to an on/off switch in the cab. Deweze recommends separate switches; one for the clutch and one for the valve. Deweze uses upfitter Aux 1 for the clutch and Aux 2 for the valve. Without upfitter switches, we install two SPST switches in the dash.

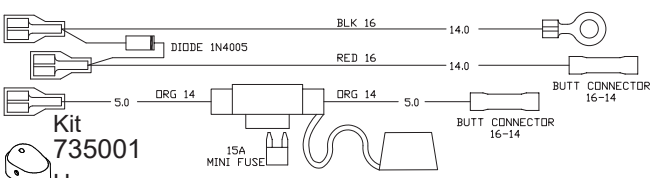

Kit
735001
Harness
732002

- Headache Rack Harness
- Valve Harness
- Front to Rear Harness
- Tailboard Harness
- Tailboard Harness Adapter

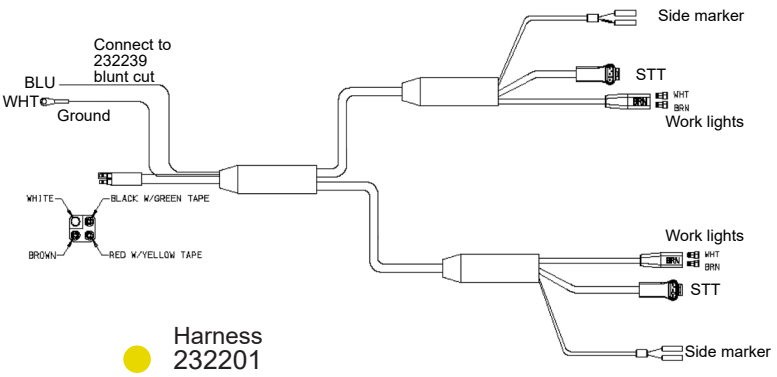

Harness 232201

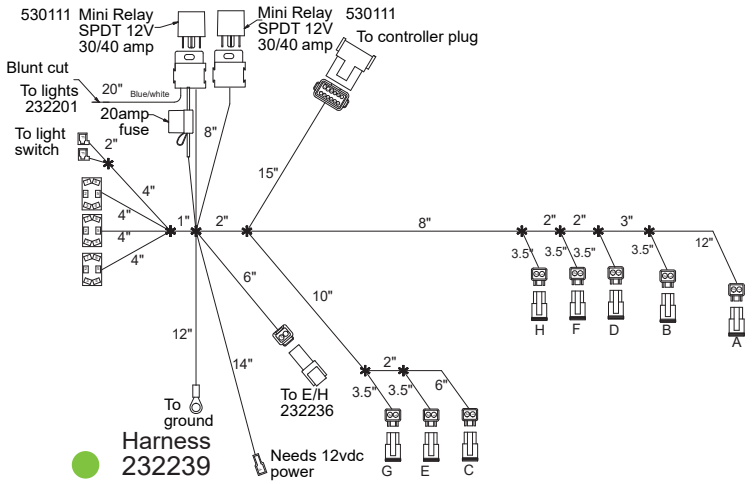

Harness 232239



870, 871 232198

876,879,976,984 232199

988 232200

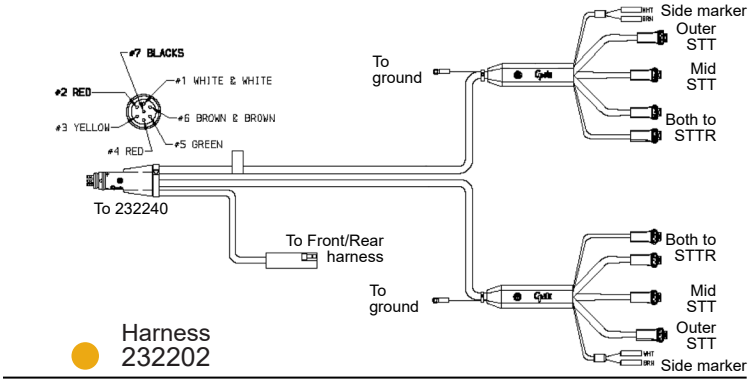

Harness 232202

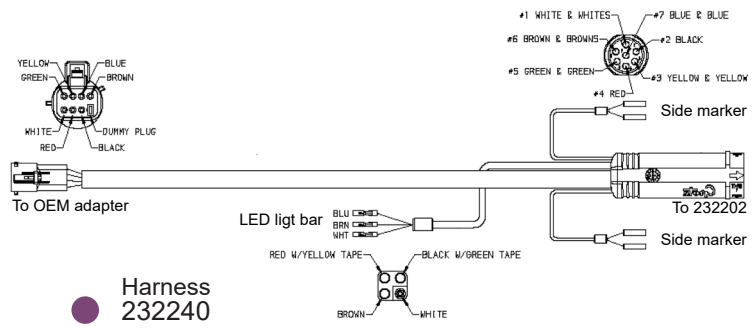

Harness 232240

OEM TO DEWEZE ADAPTERS

PART#		DESCRIPTION	MAKE	TYPE	START YR	END YR
232161	FORD	Harness Adapter, FD CC	Ford	CC	1999	
232176		Harness Adapter, FD Box Delete, 2008-10	Ford	BTO	2008	2010
232160		Harness Adapter, FD Box Delete, 2011-16	Ford	BTO	2011	2016
232177		Harness Adapter, FD Box Delete, 2017-19	Ford	BTO	2017	2019
232185		Harness Adapter, FD Box Delete, 2020-22	Ford	BTO	2020	2022
232192		BLIS Add On for **232185** (Cut purple & red wires from 20 pin, splice into 232192)	Ford	BLIS	2020	2022
232234		Harness Adapter, FD Box Delete W/BLIS 23+	Ford	BTO	2023	
232174	CHEVY	Harness Adapter, GM 02-14 w/3rd Brake	GM	ALL	2002	2014
232163		Harness Adapter, GM 02-14 No 3rd Brake	GM	ALL	2002	2014
232158		Harness Adapter, GM 2015 ONLY	GM	ALL	2015	2015
232159		Harness Adapter, GM 2016-2019	GM	ALL	2016	2019
232179		Harness Adapter, 2019 MD Dty 4500-6500	GM	ALL	2019	
232187		Harness Adapter, GM CC 2020+	GM	CC	2020	
232178		Harness Adapter, 2020 GM 2500-3500	GM	ALL	2020	
232238		Harness Adapter, GM BTO	GM	BTO	2024	
232164	DODGE	Harness Adapter, Ram CC	Dodge	CC	1999	
232193		Harness Adapter, Ram Box Delete (STD)	Dodge	BTO	2019	2026
232233		Add to **232193** Harness Adapter, Ram Box Delete (LED)	Dodge	BTO	2019	2026
232248		Harness Adapter, Ram Box Delete (STD)	Dodge	BTO	2026	
232249		Add to **232248** Harness Adapter, Ram Box Delete (LED)	Dodge	BTO	2026	
232162		Harness Adapter, Generic	ALL	ALL	1999	

DODGE

Deweze DOES NOT provide a solution for FAST FLASHING lights. Customers can source LOAD EQUALIZERS independantly.

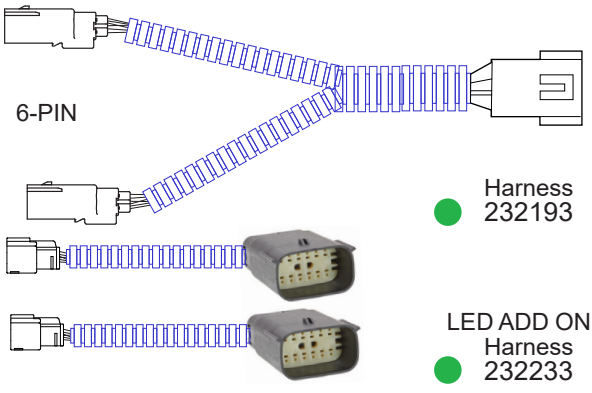

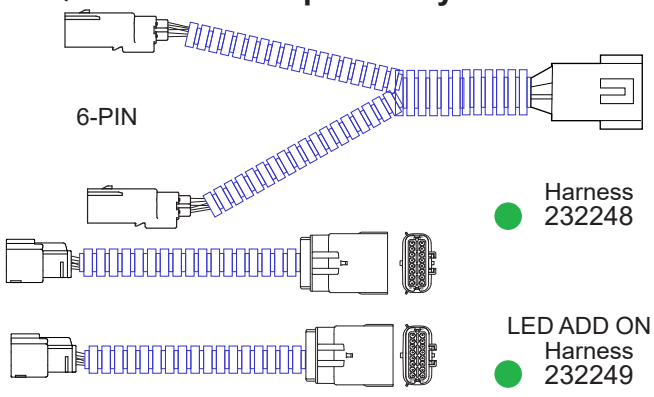

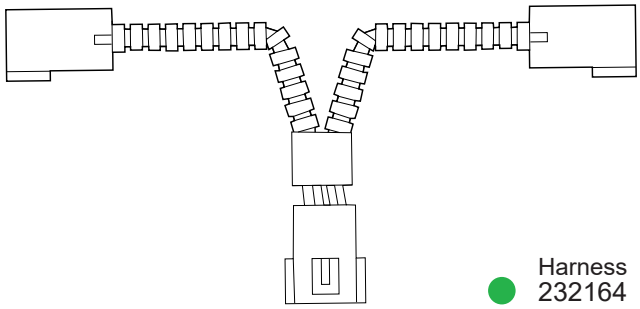

GENERIC (BLUNT CUT)

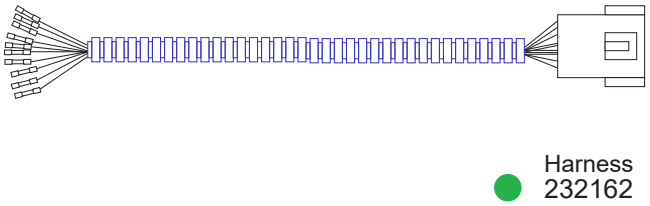

FORD

● OEM to Deweze Adapters

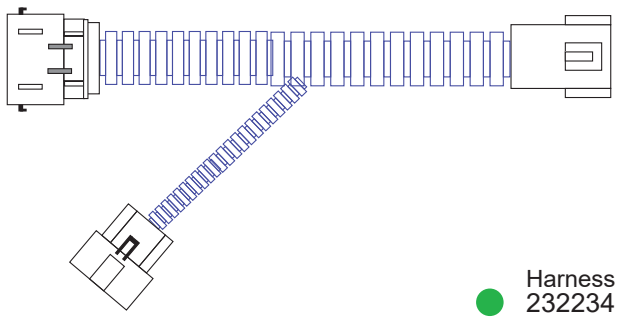

● Harness 232234

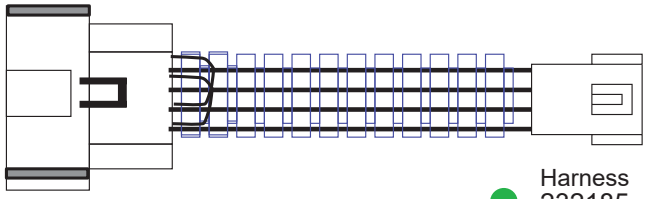

● Harness 232185
232177
232160

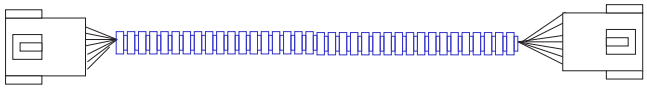

● Harness 232176

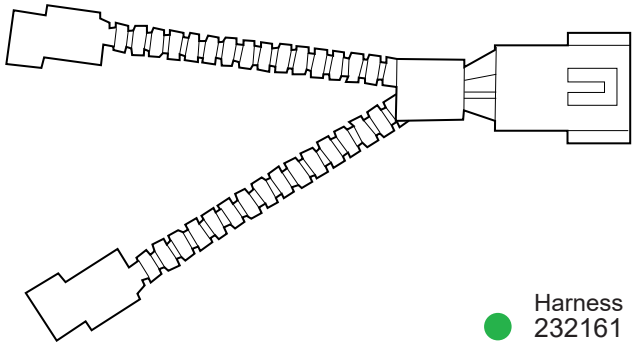

● Harness 232161

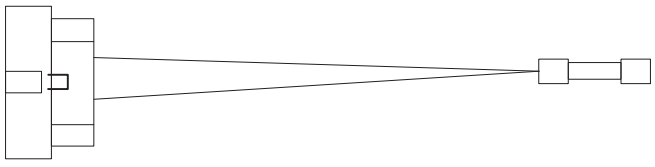

● Harness 232192

CHEVY

● OEM to Deweze Adapters

Purple wires only for fast flashing issue. See pg. 70

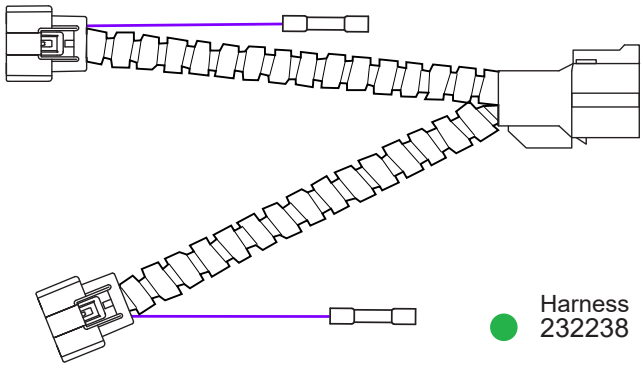

● Harness 232238

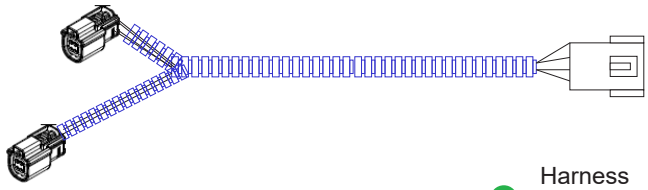

● Harness 232178
232159
232187

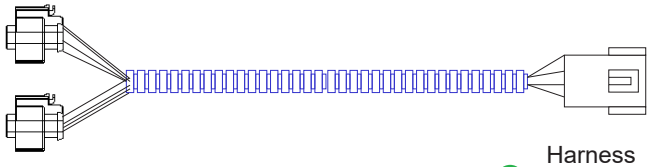

● Harness 232158

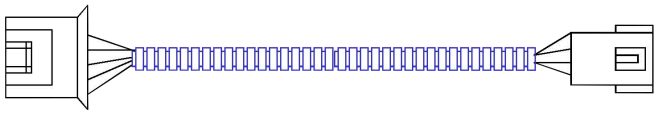

● Harness 232174
232163

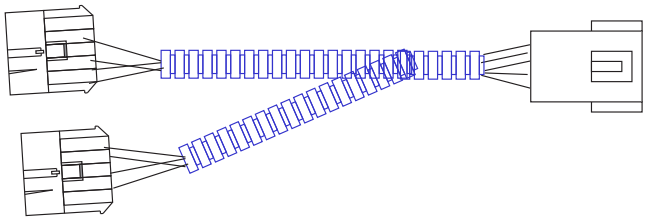

● Harness 232179

- Wired Control: 2 Bank

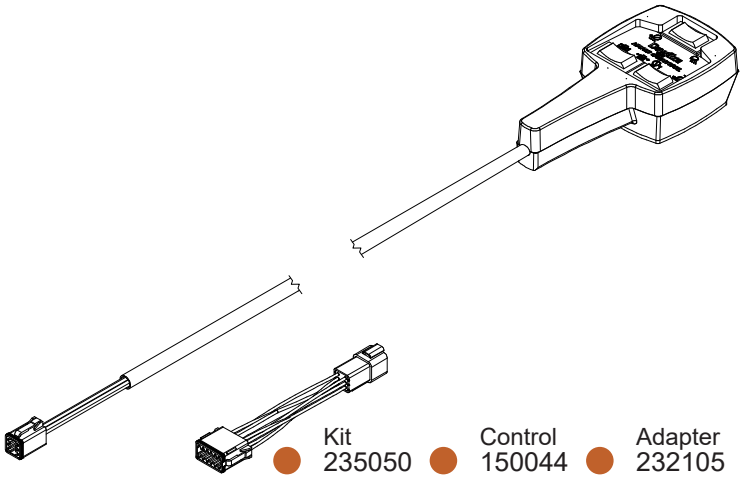

Kit 235050 ● Control 150044 ● Adapter 232105

- Wired Control: 3 Bank

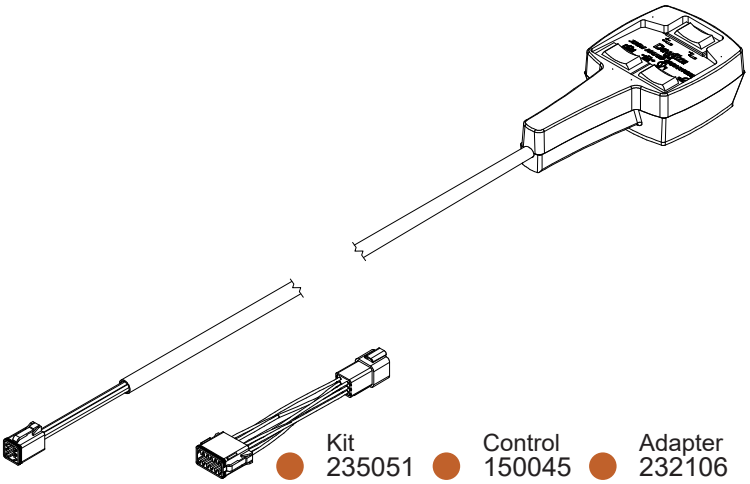

Kit 235051 ● Control 150045 ● Adapter 232106

- Wireless Control

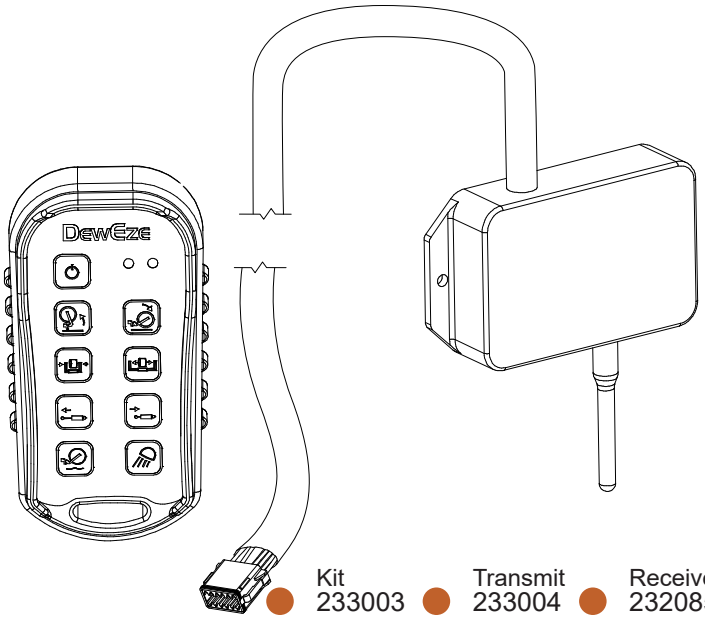

Kit 233003 ● Transmit 233004 ● Receive 232085

150044 REV:

HAND CONTROL & CABLE: 2 BANK

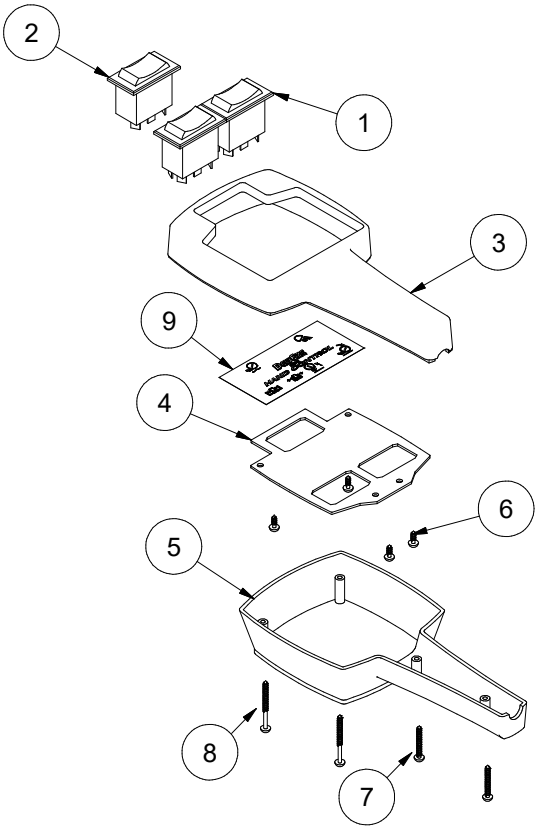

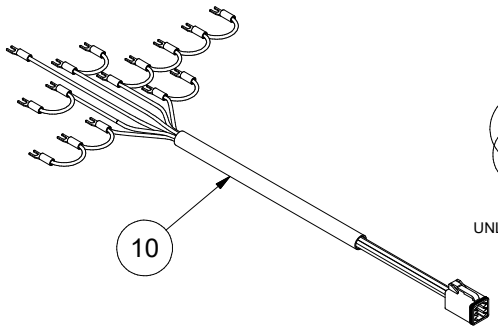

Wiring Diagram
Switches Shown From Back Side

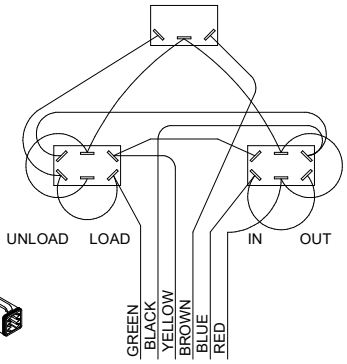

Parts List			Kit: 150044
ITEM	QTY	PART #	DESCRIPTION
1	2	130029	Switch, Rocker, DPDT
2	1	130065	Switch, Rocker, On-Off-(On)
3	1	150001	Top Housing, Hand Control
4	1	150002	Switch Plate, Hand Control
5	1	150003	Bottom Housing, Hand Control
6	4	150013	Screw, #6 X 1/4 Type F
7	2	150014	Screw, #6 X 1 Sheetmetal
8	2	150015	Screw, #6 X 1.5 Sheetmetal
9	1	202082	Decal, Hand Control, 2 Bank, Gen III

150045 REV:

HAND CONTROL & CABLE: 3 BANK

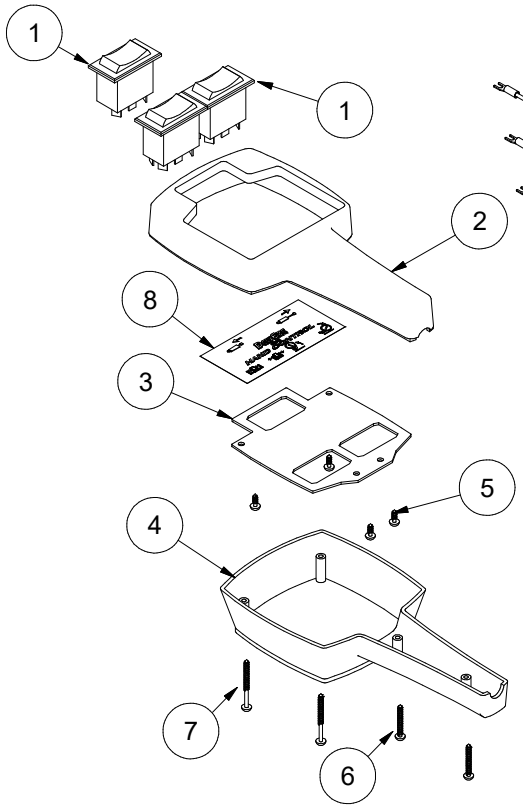

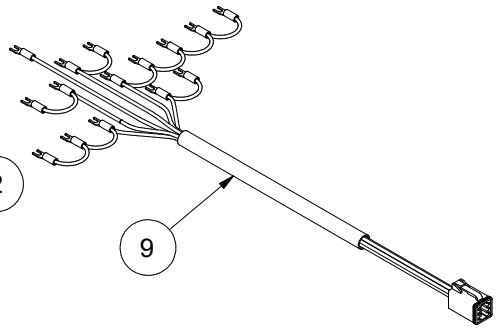

Wiring Diagram
Switches Shown From Back Side

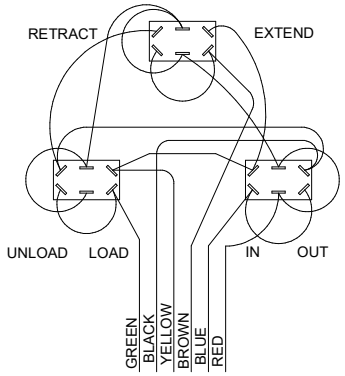

Parts List			Kit: 150045
ITEM	QTY	PART #	DESCRIPTION
1	3	130029	Switch, Rocker, DPDT
2	1	150001	Top Housing, Hand Control
3	1	150002	Switch Plate, Hand Control
4	1	150003	Bottom Housing, Hand Control
5	4	150013	Screw, #6 X 1/4 Type F
6	2	150014	Screw, #6 X 1 Sheetmetal
7	2	150015	Screw, #6 X 1.5 Sheetmetal
8	1	202083	Decal, Hand Control, 3 Bank, Gen III

E/H & E/H HYBRID PARTS

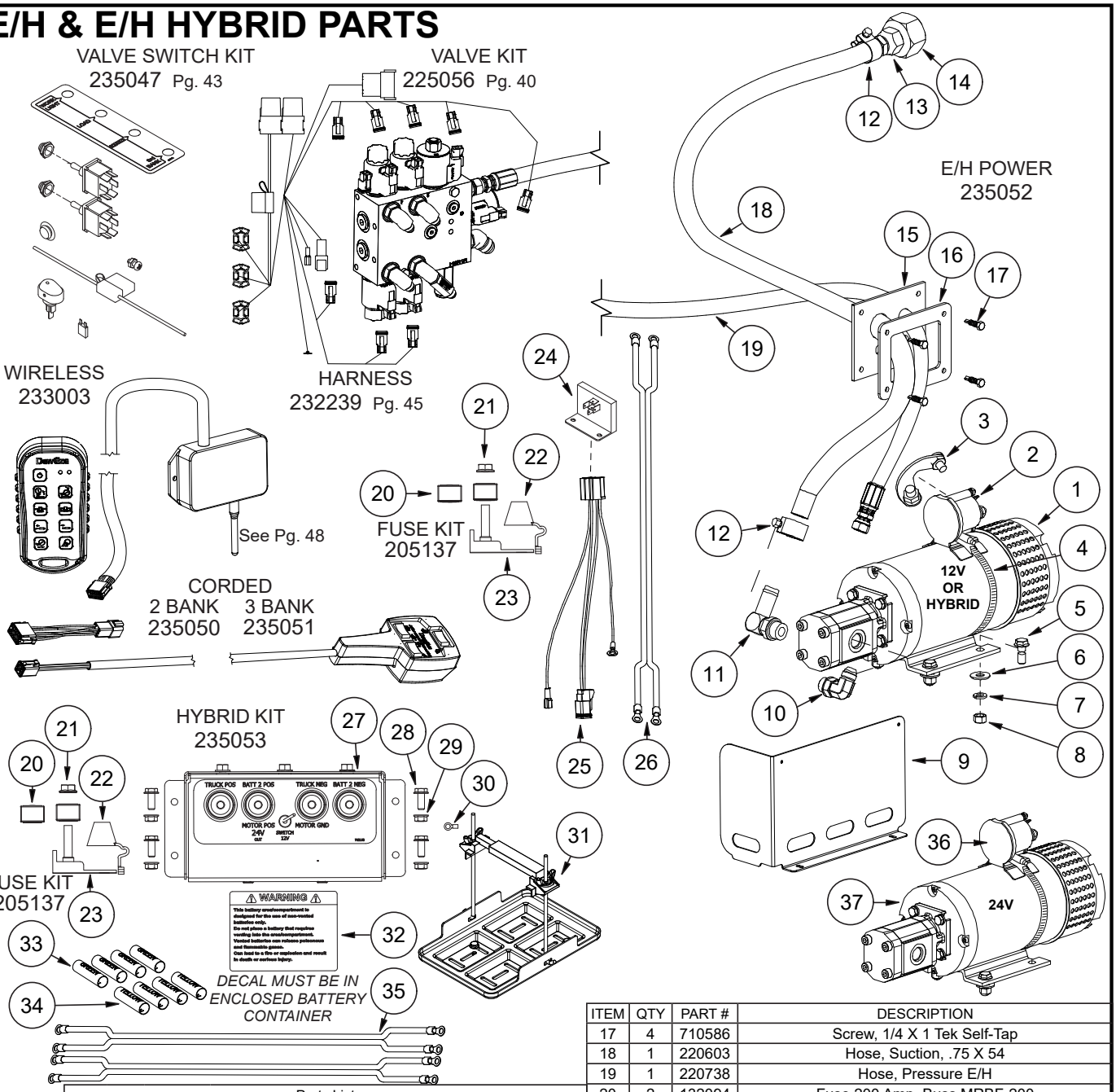

Parts List

ITEM	QTY	Part #	DESCRIPTION
1	1	230159	Motor/Pump Unit HD 12V
2	1	232103	Solenoid, 4 Post 12vdc Contactor
3	1	232102	Strap, Solenoid To Motor
4	1	940028	Hose Clamp 6”
5	4	110440	Bolt, 3/8-16 X 1, Wiz Flange
6	4	110676	Washer, 3/8 Flat Standard
7	4	110672	Washer, 3/8 Lock
8	4	110826	Nut, 3/8-16 GR 5
9	1	260400	Shield, E/H
10	1	120288	Adapter, 8mj-8mb90
11	1	120184	Adapter, 12bh-10mb90
12	2	112136	Clamp, 3/4” T-Bolt, Supra W2-120
13	1	120764	Adapter, 12fjx-12hb
14	1	120763	Adapter, 20fj-12mj
15	1	260401	Access Cover, E/H
16	1	211849	Access Cover Frame
17	4	710586	Screw, 1/4 X 1 Tek Self-Tap
18	1	220603	Hose, Suction, .75 X 54
19	1	220738	Hose, Pressure E/H
20	2	132094	Fuse 200 Amp, Buss MRBF-200
21	1	110141	Nut, M8 X 1.25 Wizflange
22	1	132092	Fuse Cover, Buss Cfcover-1R
23	1	132093	Fuse Holder, Buss CFbar1-M8xSP
24	1	232241	Timer Relay, 3 Sec Off-Delay
25	1	232236	Timer Harness
26	1	230155	Battery Cable, 2ga Twin Lead, 186”
27	1	735021	12/24 Vdc Series/Parallel Switch Unit
28	4	110444	Bolt, 5/16-18 X 0.75, Wiz Flange
29	4	110606	Nut, 5/16-18 Wiz Flange
30	1	132040	Terminal Ring 22-16ga
31	1	235023	Battery Tray Kit
32	1	202180	Decal, Non-Vented Battery Warning
33	4	230165	Green Heat Shrink Tubing 3”
34	4	230166	Yellow Heat Shrink Tubing 3”
35	2	230161	Battery Cable, 2ga Twin Lead, 48”
36	1	132121	Solenoid, 4 Post, 24VDC Contactor
37	1	735014	Motor/Pump Unit HD 24V

E/H HYBRID INSTRUCTIONS

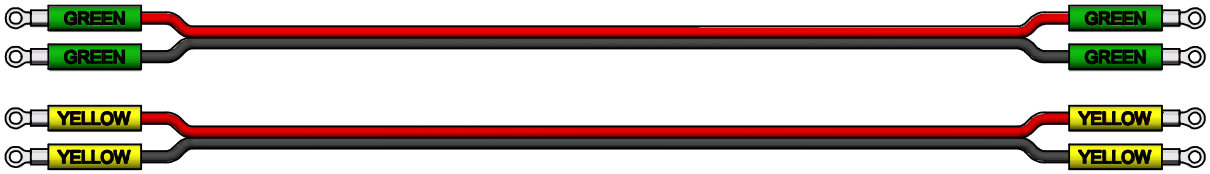

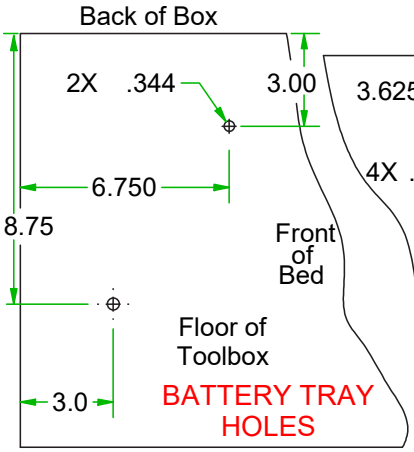

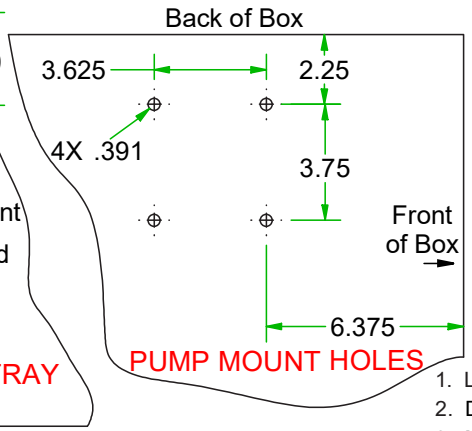

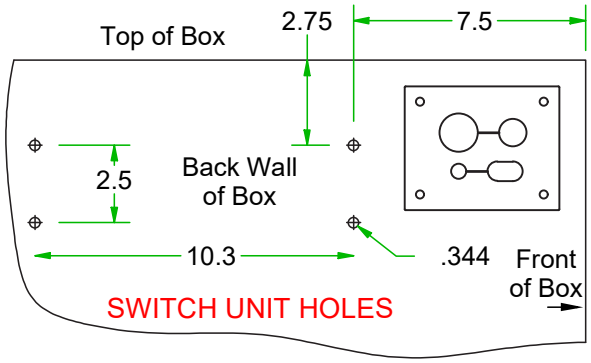

1. Label the 48" paired cables. Will aid in troubleshooting.
2. Drill holes in back wall and floor of toolbox.
3. Mount Switch Unit on back wall
4. Install battery tray and battery on floor
5. Attach 200 amp fuse holder to positive battery terminal
6. Attach battery cables as indicated on wiring diagram.

⚠ WARNING

This battery area/compartment is designed for the use of non-vented batteries only.
Do not place a battery that requires venting into this area/compartment.
Vented batteries can release poisonous and flammable gases.
Can lead to a fire or explosion and result in death or serious injury.

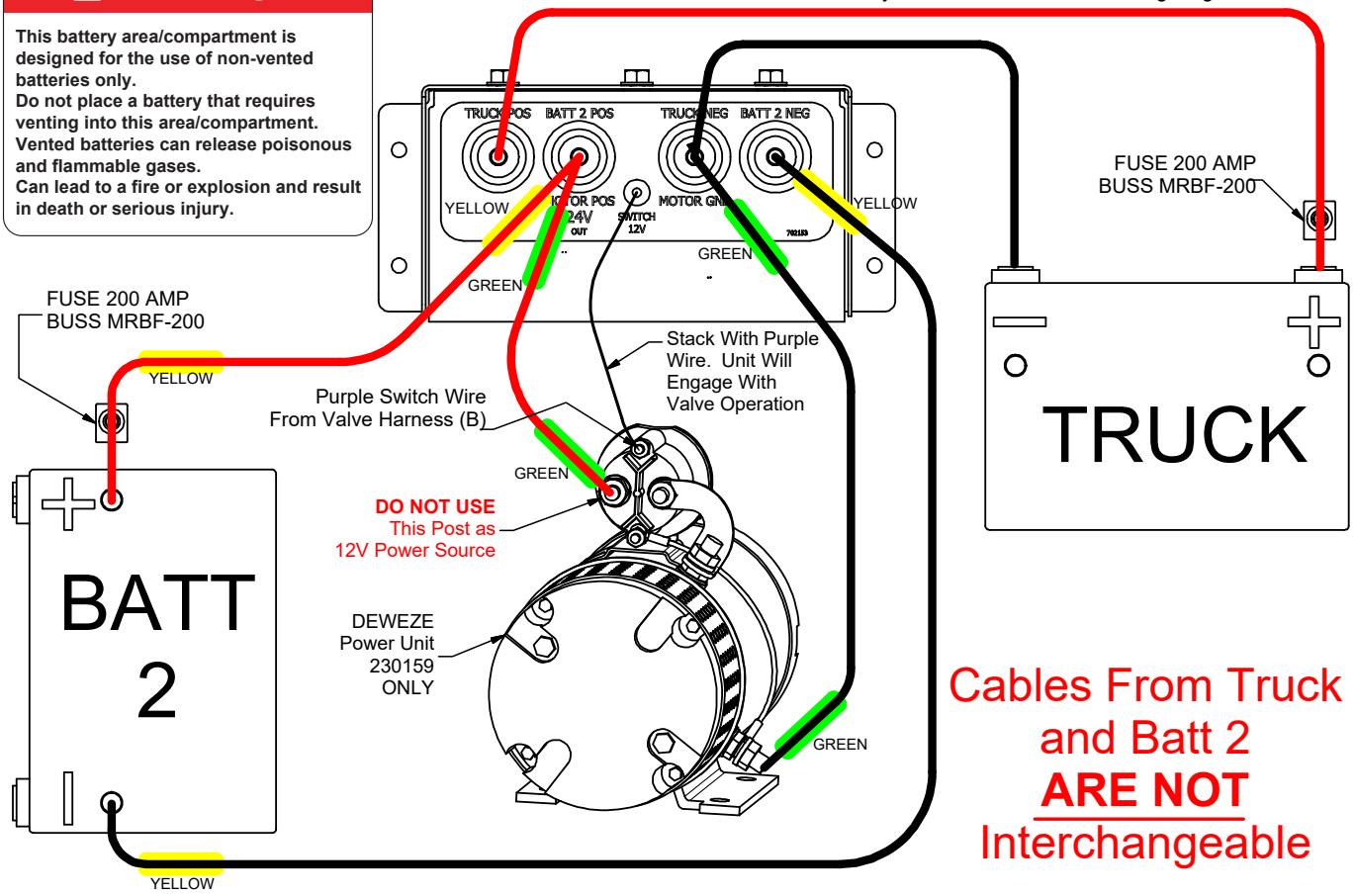

Cables From Truck and Batt 2 **ARE NOT** Interchangeable

MANDATORY: Use AGM or Other Non-Vented Battery.
Risk of explosion from hydrogen buildup.

E/H HD 800/900

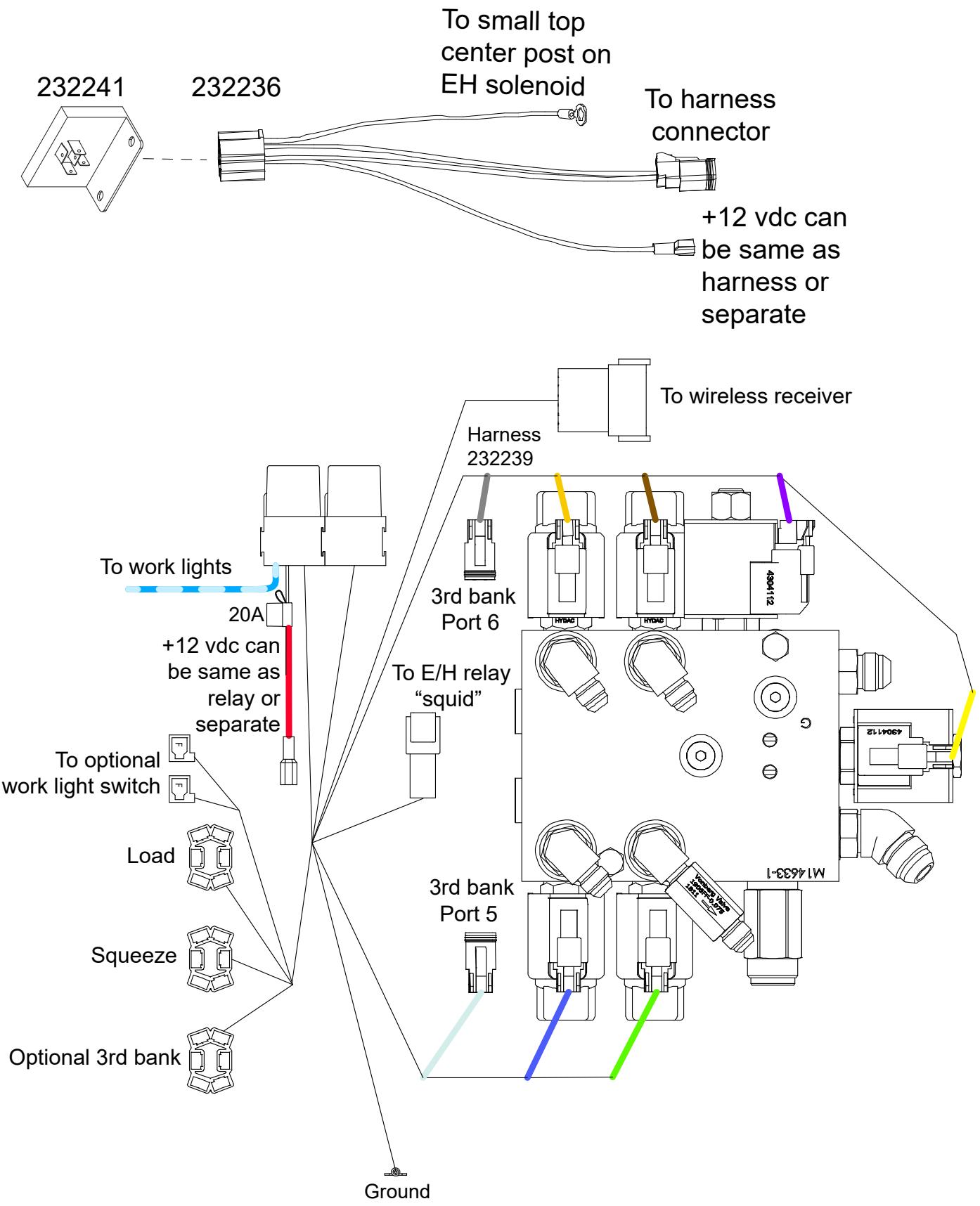
232241
232236
To small top center post on EH solenoid
To harness connector
+12 vdc can be same as harness or separate
To wireless receiver
Harness 232239
To work lights
20A
+12 vdc can be same as relay or separate
To optional work light switch
Load
Squeeze
Optional 3rd bank
3rd bank Port 6
To E/H relay "squid"
3rd bank Port 5
Ground

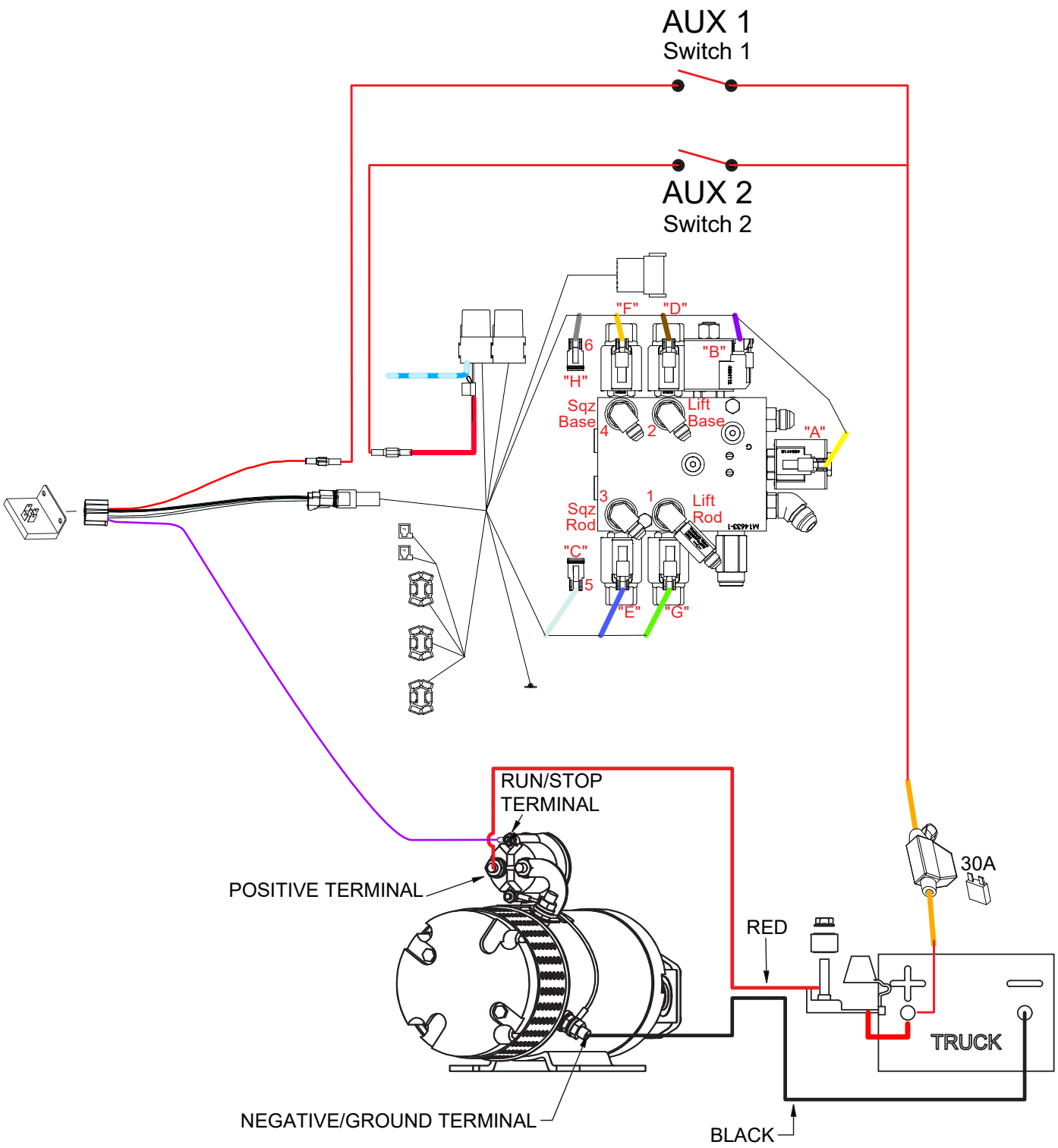
AUX 1
Switch 1
AUX 2
Switch 2
"F"
"D"
6
"B"
"H"
Sqz
Base
4
2
Lift
Base
"A"
3
1
Sqz
Rod
Lift
Rod
"C"
5
"E"
"G"
RUN/STOP
TERMINAL
POSITIVE TERMINAL
30A
RED
TRUCK
NEGATIVE/GROUND TERMINAL
BLACK

BED LIGHTS

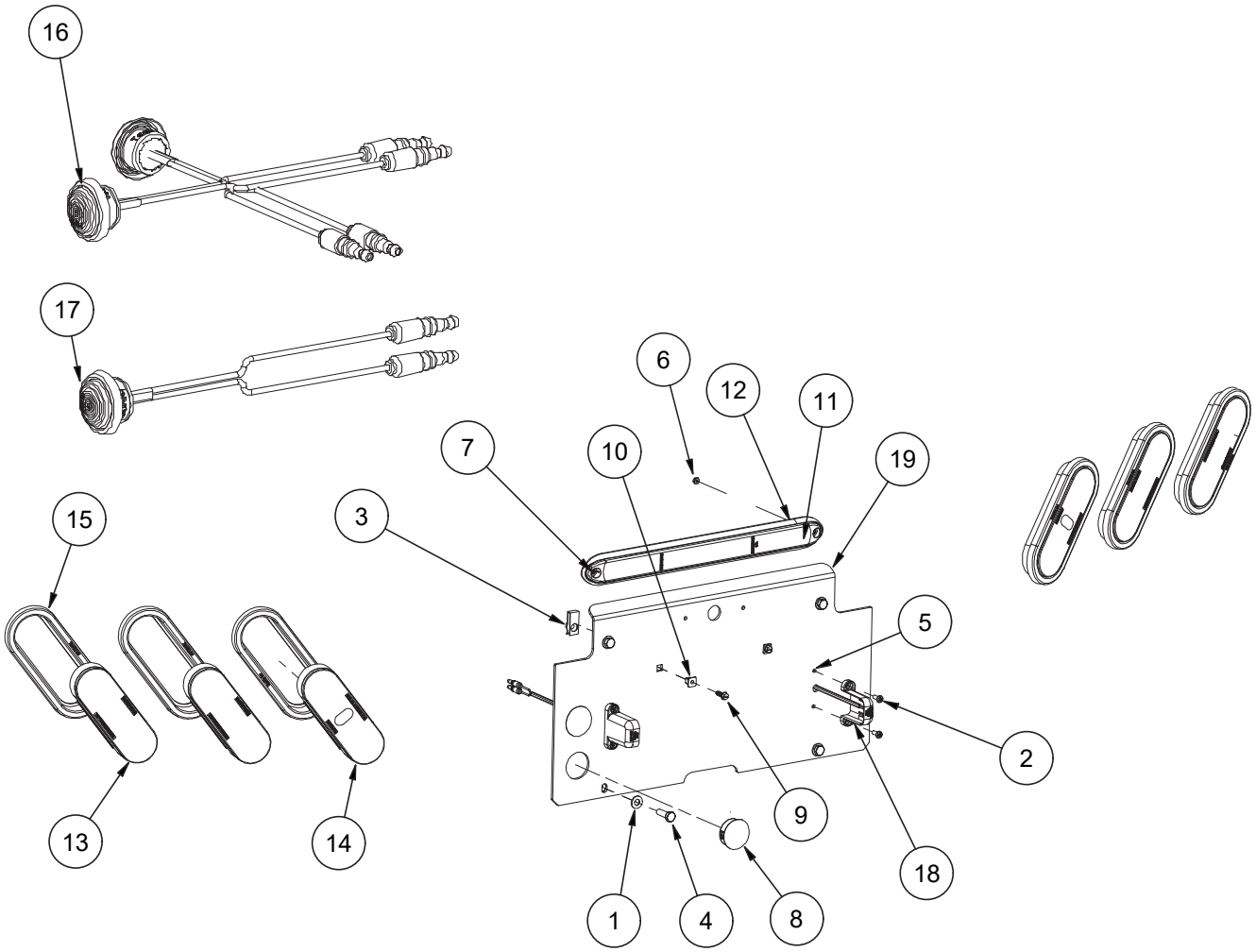

ITEM	QTY	PART #	DESCRIPTION
1	4	110069	Washer, 5/16" Flat SAE
2	4	110264	Bolt, 10-24 X .5 Stainless, Phillips
3	4	110319	Nut, 5/16-18 U-Type .75l
4	4	110423	Bolt, 5/16-18 X 1.0
5	4	110631	Nut, 10-24 Lock Nylon Insert
6	2	110633	Nut, #6/32 Machine Screw
7	2	110756	Screw, 6/32 X 1/2 In Pan Head
8	2	111261	Plug, Plastic, 1.5 Thick Panel Dome
9	2	200050	Screw, #12 X 3/4 Hex Head
10	2	200051	Nylon License Plate Insert
11	1	232206	Light, Id And Load Lamp
12	1	232207	Trim Ring, Black
13	4	232209	Light, 6" Oval STT
14	2	232210	Light, 6" Oval STTR
15	6	232211	Grommet, 6" Oval
16	4	232212	Light, 3/4" Sidemarker, Amber
17	2	232213	Light, 3/4" Sidemarker, Red
18	2	232242	Light, License, Vertical Mount, Short
19	1	261343	Panel, Rear, Lower

FLATBED SPECIFIC: 261432

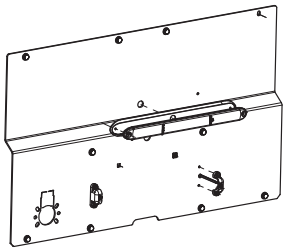

264002 REV: D

HEADACHE RACK LIGHTS

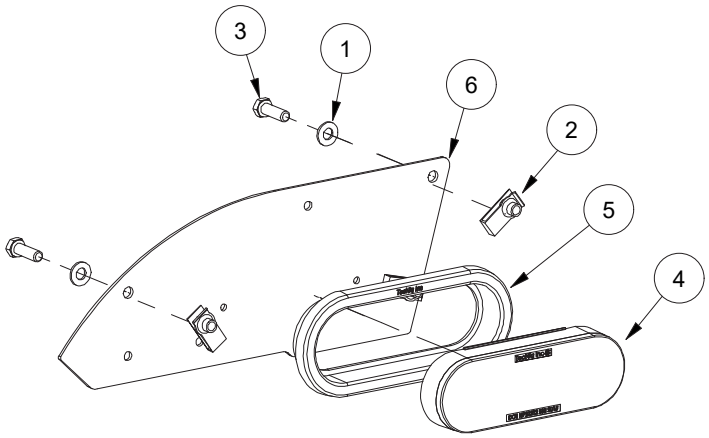

Parts List			
ITEM	QTY	PART #	DESCRIPTION
1	6	110069	WASHER, 5/16" FLAT SAE
2	6	110319	NUT, 5/16-18 U-TYPE .75L
3	6	110423	BOLT, 5/16-18 X 1.0
4	2	232209	LIGHT, 6" OVAL STT
5	2	232211	GROMMET, 6" OVAL
6	2	261156	COVER, LIGHT

264043 REV: B

HEADACHE RACK SWING LIGHT KIT

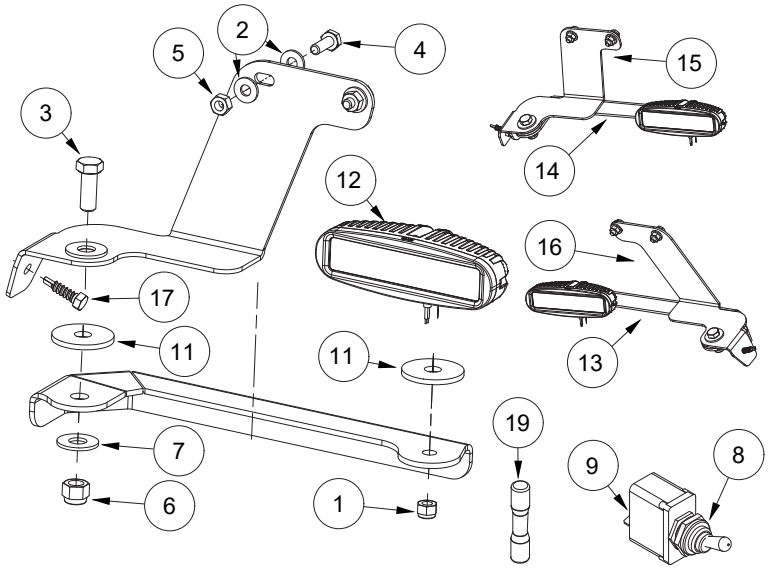

Parts List Kit: 264043			
ITEM	QTY	PART #	DESCRIPTION
1	2	110230	Nut, M8 X 1.25, Lock Nylon
2	8	110298	Washer, 1/4" Flat Sae
3	2	110420	Bolt, 3/8-16 X 1.0
4	4	110561	Bolt, 1/4-20 X .75
5	4	110609	Nut, 1/4-20
6	2	110618	Nut, 3/8-16 Lock Nylon Insert
7	4	110676	Washer, 3/8" Flat Standard
8	1	132035	Switch Boot
9	1	132135	Switch, Toggle, Spst, On-Off
10	1	132147	Terminal, Butt Connect 16-14, Heat Shink
11	4	211747	Friction Washer 1.5"
12	2	232243	LED, 5" Rect, Flood, Bullet Connectors
13	1	260624	Bracket, Swing Light, Arm, Right
14	1	260625	Bracket, Swing Light, Arm, Left
15	1	261206	Bracket, Swing Light, Left
16	1	261207	Bracket, Swing Light, Right
17	2	710586	Screw, 1/4 X 1 Tek Self-Tap


232214
NOT USED

264034 REV: A

HEADACHE RACK FIXED LIGHT KIT

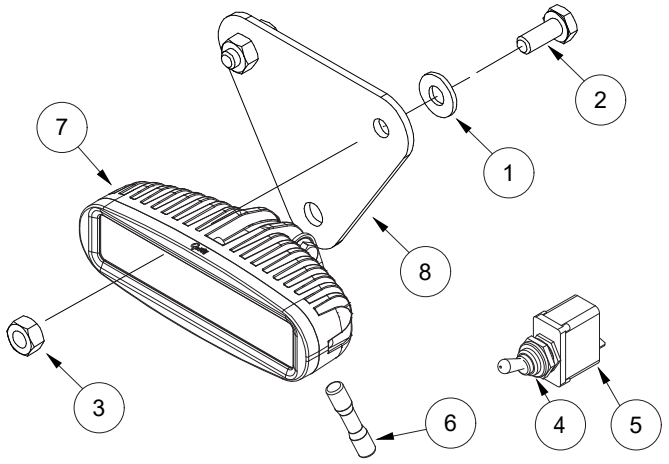

Parts List Kit: 264034			
ITEM	QTY	PART #	DESCRIPTION
1	4	110298	Washer, 1/4" Flat SAE
2	4	110299	Bolt, 1/4-20 X .625 Hex GR 5
3	4	110609	Nut, 1/4-20
4	1	132035	Switch Boot
5	1	132135	Switch , Toggle, SPST, On-Off
6	2	132147	Terminal, Butt Connect 16-14, Heat Shink
7	2	232243	LED, 5" Rect, Flood, Bullet Connectors
8	2	260626	Bracket, Cargo Light


232214
NOT USED

264001 REV: D

HEADACHE RACK COVERS (REGULAR)

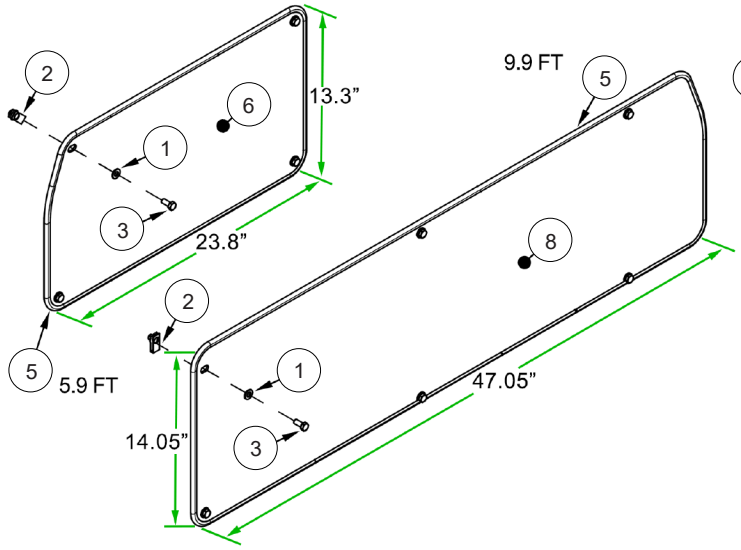

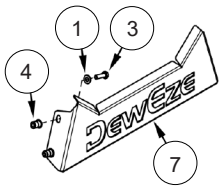

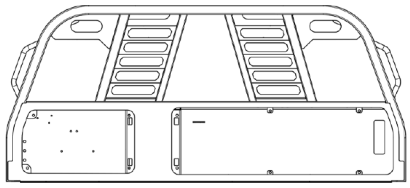

Parts List			
ITEM	QTY	PART #	DESCRIPTION
1	14	110069	Washer, 5/16" Flat Sae
2	10	110319	Nut, 5/16-18 U-Type .75l
3	14	110423	Bolt, 5/16-18 X 1.0
4	4	110849	Nut, 5/16-18 Rivet Steel
5	15.8'	200249	Molding, Valve Cover
6	1	261104	Cover, Valve
7	1	261105	Plate, Deweze
8	1	261155	Cover, Hydraulic Tank

264033 REV: C

HEADACHE RACK COVERS (MEDIUM)

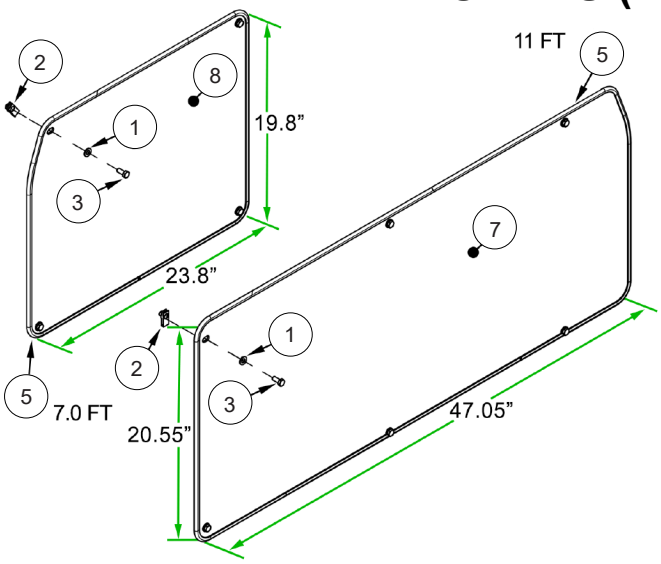

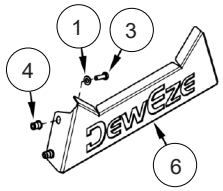

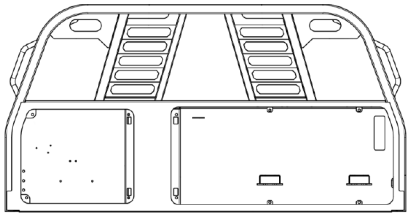

Parts List			
ITEM	QTY	PART #	DESCRIPTION
1	14	110069	Washer, 5/16" Flat Sae
2	10	110319	Nut, 5/16-18 U-Type .75l
3	14	110423	Bolt, 5/16-18 X 1.0
4	4	110849	Nut, 5/16-18 Rivet Steel
5	18'	200249	Molding, Valve Cover
6	1	261105	Plate, Deweze
7	1	261148	Cover, Hydraulic Tank, Med
8	1	261149	Cover, Valve, Med

264067 REV: A

HEADACHE RACK COVERS (TALL)

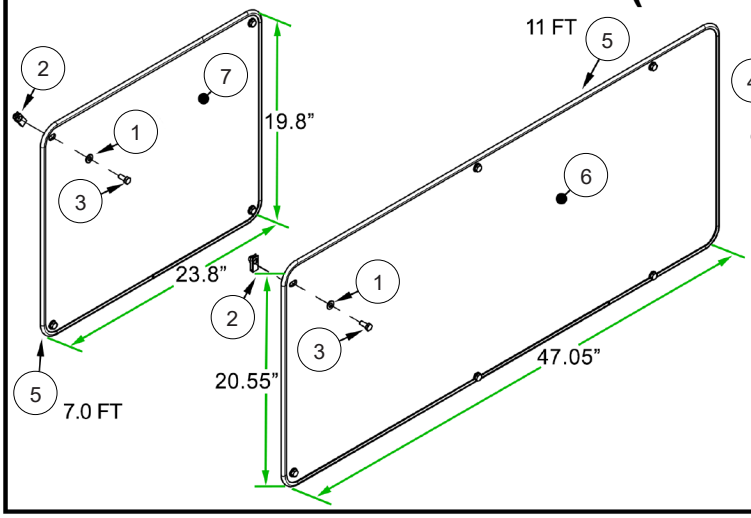

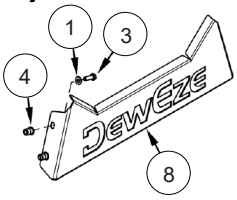

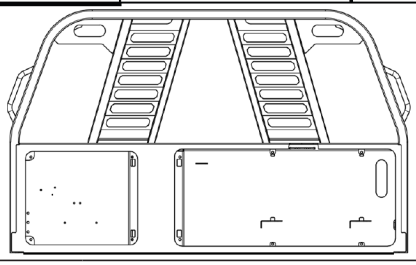

Parts List			
ITEM	QTY	PART #	DESCRIPTION
1	14	110069	Washer, 5/16" Flat Sae
2	10	110319	Nut, 5/16-18 U-Type .75l
3	14	110423	Bolt, 5/16-18 X 1.0
4	4	110849	Nut, 5/16-18 Rivet Steel
5	18'	200249	Molding, Valve Cover
6	1	261317	Cover, Hydraulic Tank, Tall
7	1	261318	Cover, Valve, Tall
8	1	261319	Plate, Deweze, Tall

STANDARD BALL WELL ASSEMBLY

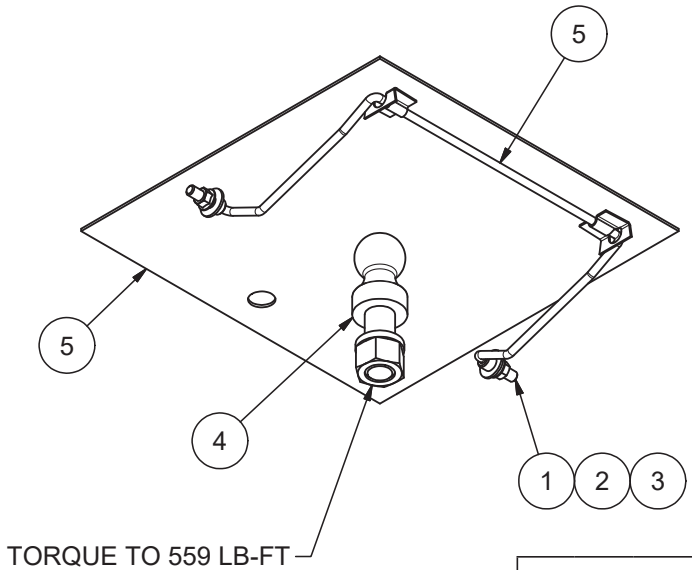

Parts List			
ITEM	QTY	PART #	DESCRIPTION
1	2	110244	Bolt, 1/2-1 3 X 1.5 Shcs
2	2	110588	Nut, 1/2-1 3 Wiz Flange
3	2	110658	Washer, 1/2" Flat Standard
4	1	212032	Hitch Ball, 2 5/16 X 1 3/8 X 1 With Hardware
5	1	265172	Weldment, Ball Well Door

REV:

HITCH ADAPTER SLEEVE AND PIN

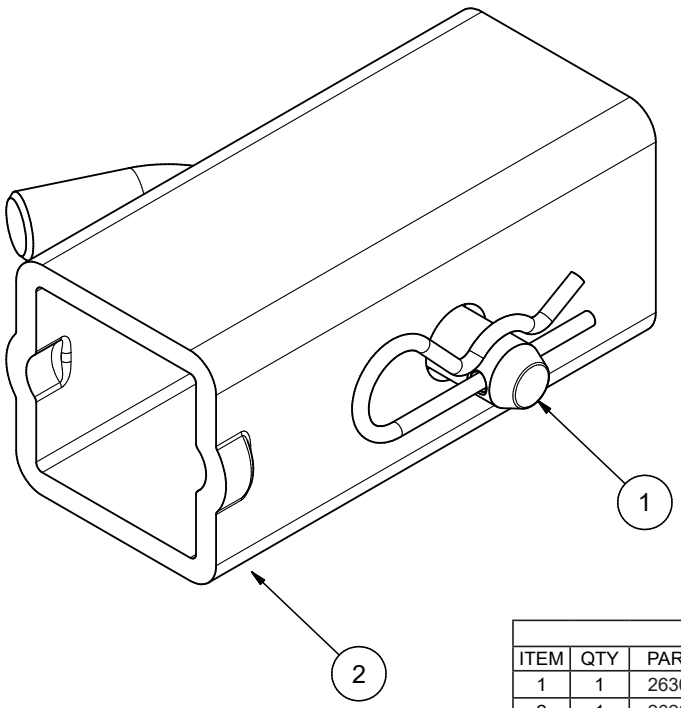

Parts List			
ITEM	QTY	PART #	DESCRIPTION
1	1	263006	Hitch Pin Assembly, 5/8"
2	1	262004	Adapter Sleeve, 2.5" to 2"

800/900 DECALS

SAFETY WARNING!

It is the owner's responsibility to replace missing or damaged warning decals. Decals are available from your Deweze dealer.

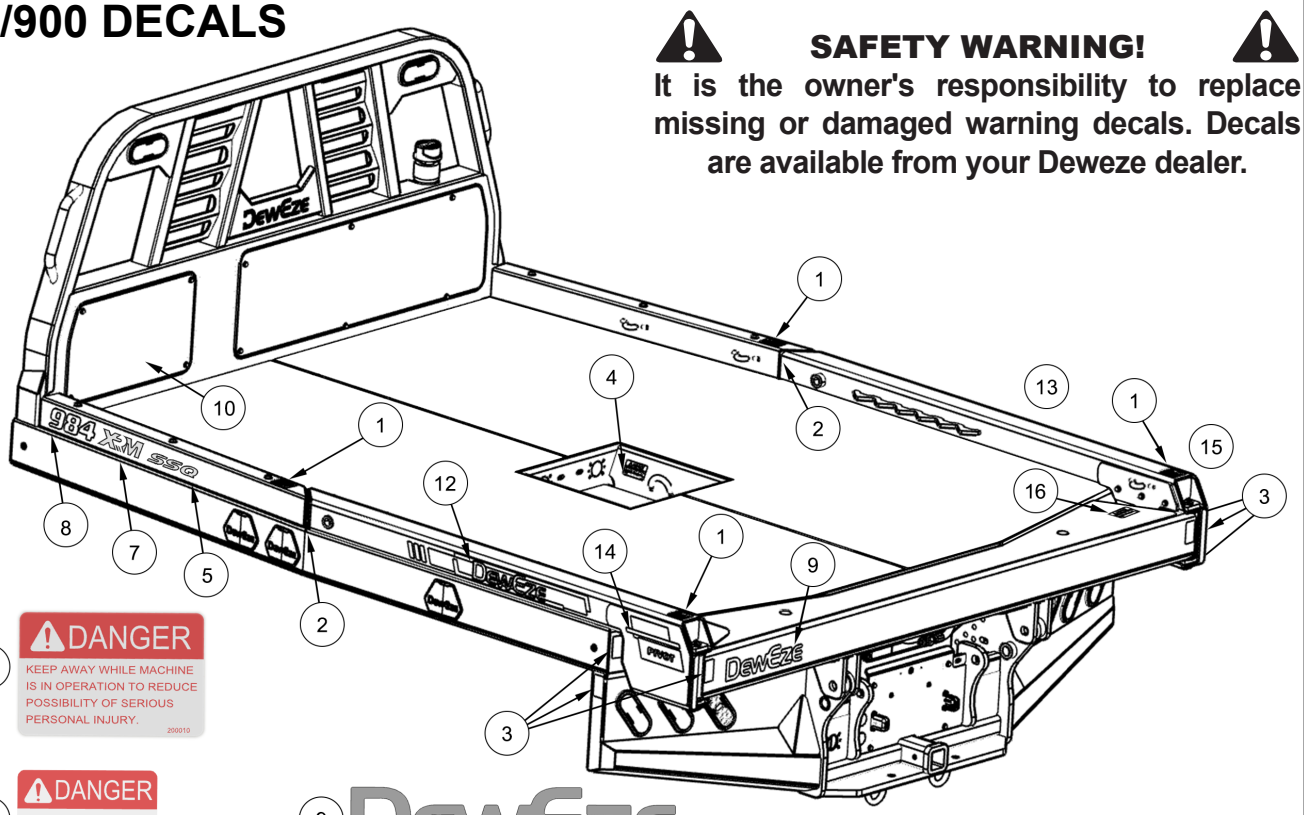

1

2



3



4



5



6



7



8



ITEM	QTY	PART #
870	2	202178
871	2	202181
876	2	202170
879	2	202182
976	2	202171
984	2	202172
988	2	202183

9



10

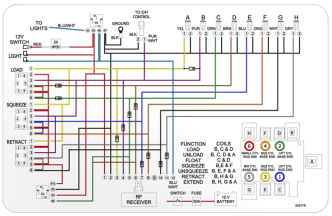

11

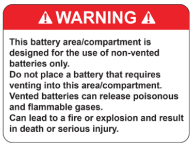

16



12



13



14

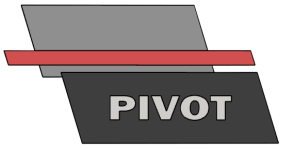

15

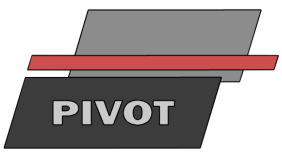

ITEM	QTY	PART #	DESCRIPTION
1	4	200010	Decal, Danger, Red on White
2	2	200144	Decal, Danger Vertical
3	6	200190	Decal, Red Reflector Rectangle
4	1	200472	Decal, Gooseneck Tongue Weight
5	2	202006	Decal, "SSQ"
6	40"	202093	Decal, Pinstripe -40 Warm Silver
7	2	202115	Decal, "XRM"
8	2	202172	Decal, "984" Bed Model
9	1	202175	Decal, "Deweze" Tailboard (No Grfx)
10	1	202179	Decal, Wiring Diagram Non-prop. Valve
11	1	202180	Decal, Non-Vented Battery Warning
12	1	202184	Decal, "Deweze" Driver Side Arm
13	1	202185	Decal, "Deweze" Pass. Side Arm
14	1	202186	Decal, "Pivot" Driver Side Arm
15	1	202187	Decal, "Pivot" Pass. Side Arm
16	2	400014	Decal, Warning, Guard Removed

264035 REV: A

SPIKE ASSEMBLY, RED FORGED

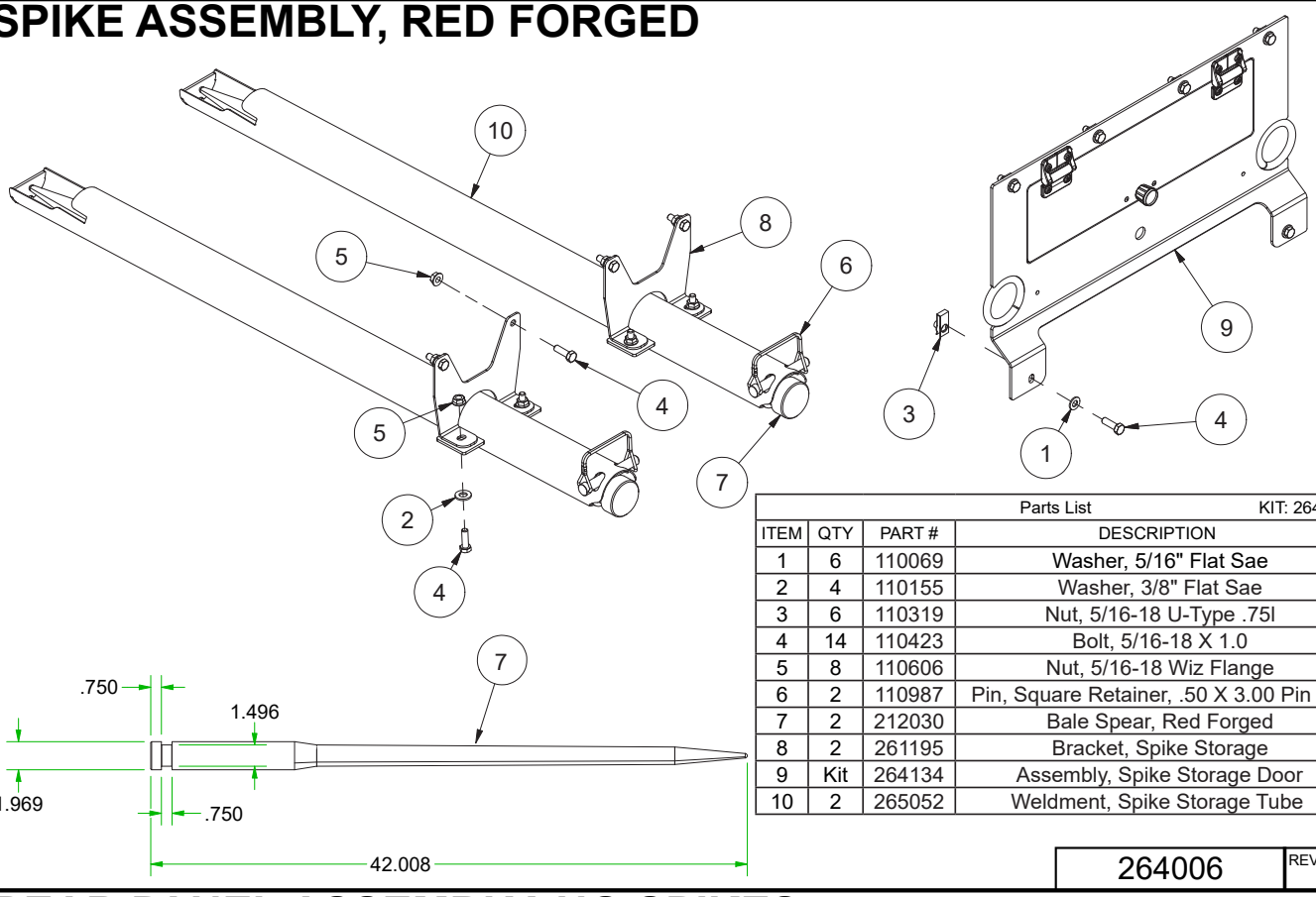

Parts List			KIT: 264035
ITEM	QTY	PART #	DESCRIPTION
1	6	110069	Washer, 5/16" Flat Sae
2	4	110155	Washer, 3/8" Flat Sae
3	6	110319	Nut, 5/16-18 U-Type .75l
4	14	110423	Bolt, 5/16-18 X 1.0
5	8	110606	Nut, 5/16-18 Wiz Flange
6	2	110987	Pin, Square Retainer, .50 X 3.00 Pin Dia
7	2	212030	Bale Spear, Red Forged
8	2	261195	Bracket, Spike Storage
9	Kit	264134	Assembly, Spike Storage Door
10	2	265052	Weldment, Spike Storage Tube

264006 REV: A

REAR PANEL ASSEMBLY, NO SPIKES

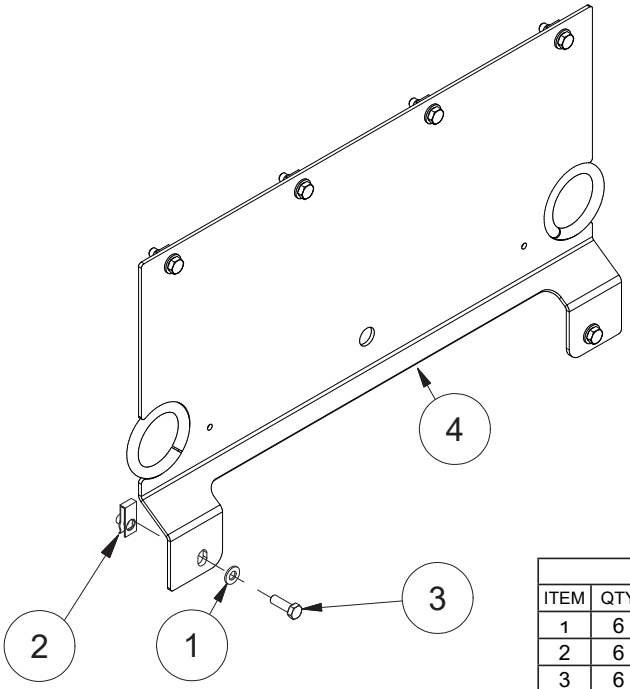

Parts List			KIT: 264006
ITEM	QTY	PART #	DESCRIPTION
1	6	110069	Washer, 5/16" Flat Sae
2	6	110319	Nut, 5/16-18 U-Type .75l
3	6	110423	Bolt, 5/16-18 X 1.0
4	Kit	264006	Weldment, Rear Panel, No Spike

264038 REV: NC

SPINNERS, PARALLEL 12”, 1.125

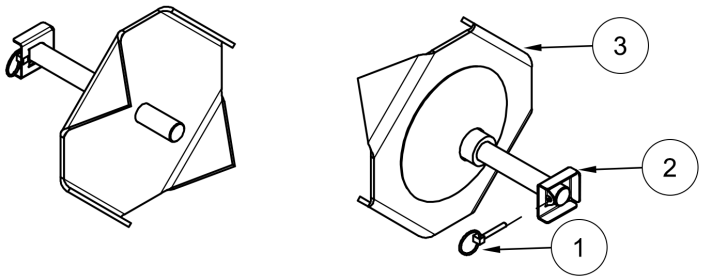

Parts List Kit: 264038			
ITEM	QTY	PART #	DESCRIPTION
1	2	210006	Pin, Lynch 1/4 X 1-3/4
2	2	261134	LYNCH PIN GUARD, 1.18
3	2	265055	Weldment, Spinner, Parallel 12", 1.125

264036 REV: NC

SPINNERS, PARALLEL 16”, 1.125

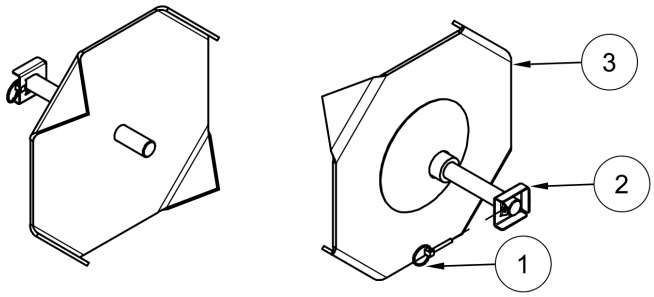

Parts List Kit: 264036			
ITEM	QTY	PART #	DESCRIPTION
1	2	210006	Pin, Lynch 1/4 X 1-3/4
2	2	261134	LYNCH PIN GUARD, 1.18
3	2	265053	Weldment, Spinner, Parallel 16", 1.125

264039 REV: NC

SPINNERS, PARALLEL XRM 12”, 1.125

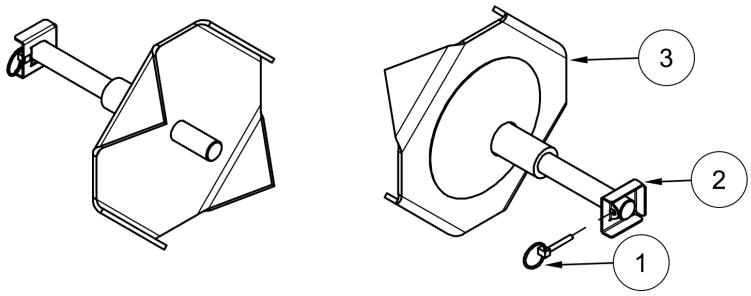

Parts List Kit: 264039			
ITEM	QTY	PART #	DESCRIPTION
1	2	210006	Pin, Lynch 1/4 X 1-3/4
2	2	261134	LYNCH PIN GUARD, 1.18
3	2	265056	Weldment, Spinner, Parallel XRM 12", 1.125

264037 REV: NC

SPINNERS, PARALLEL XRM 16”, 1.125

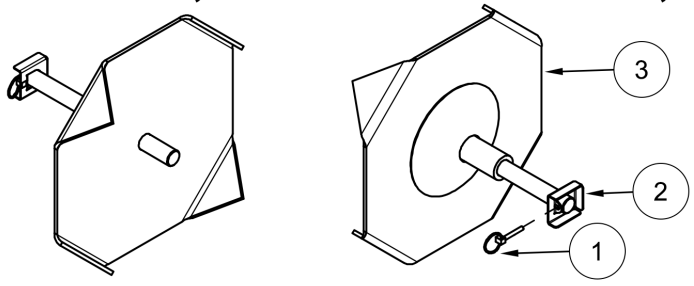

Parts List Kit: 264037			
ITEM	QTY	PART #	DESCRIPTION
1	2	210006	Pin, Lynch 1/4 X 1-3/4
2	2	261134	LYNCH PIN GUARD, 1.18
3	2	265054	Weldment, Spinner, Parallel XRM 16", 1.125

264012 REV: NC

SPINNERS, PIVOT, 1.125

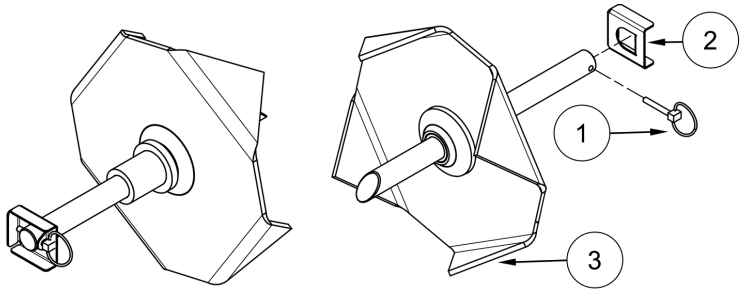

Parts List Kit: 264012			
ITEM	QTY	PART #	DESCRIPTION
1	2	210006	Pin, Lynch 1/4 X 1-3/4
2	2	261134	LYNCH PIN GUARD, 1.18
3	2	265032	WELDMENT, SWIVEL SPINNER 1.125

264011	REV: A

RISER, OFFSET PAIR, 1.125

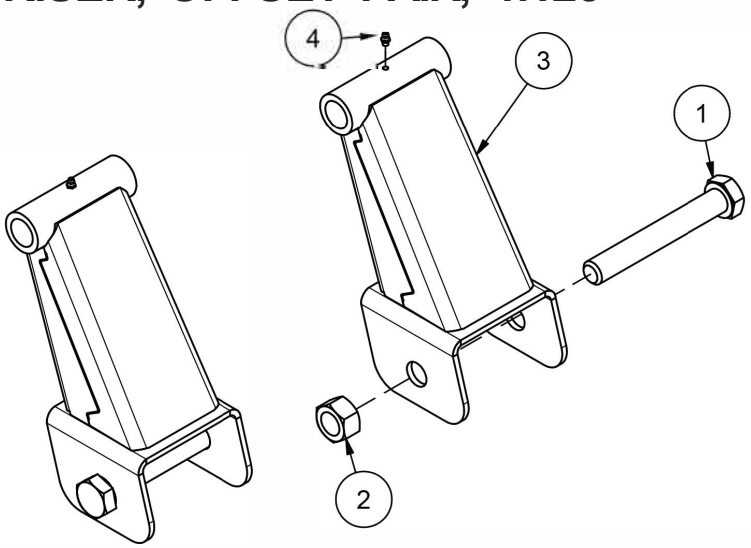

Risers sold in pairs with 264011
To order QTY 1, dealers must order ".5 "

Parts List Kit: 264011			
ITEM	QTY	PART#	DESCRIPTION
1	2	110364	BOLT, 1-8 X 7.0
2	2	110601	NUT, 1-8
3	2	265031	WELDMENT, RISER 1.125 NOT SERVICE PART
4	2	510174	GREASE ZERK, 1/4-28 ST

264174	REV: NC

LIFT BAR, PARALLEL



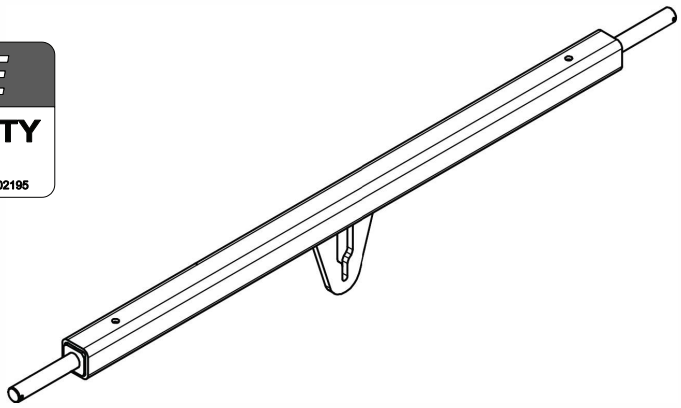

Kit: 264174

264175	REV: NC

LIFT BAR, PIVOT



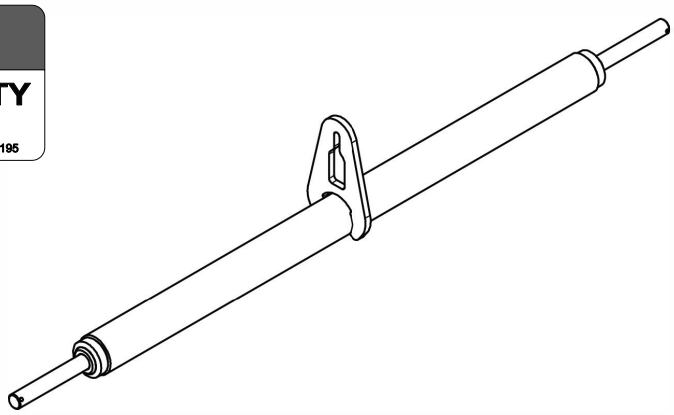

Kit: 264175

SKIRT SELECTION DETAILS

BED MODELS	FRONT (w/TBX)	REAR (w/TBX)		REAR (no/TBX)	
	ALL BEDS	PIVOT	PARALLEL	PIVOT	PARALLEL
870	264049	264049	264062	264047	264053
871	264049	264049	264062	264047	264053
876	264062	264049	264062	264047	264053
879	264062	264062	264062	264053	264054
976	264062	264049	264062	264047	264053
984	264062	264062	264062	264053	264054
988	264088	264062	264062	264053	264054
988 x2 30" TBX	264049	264062	264062	264053	264054

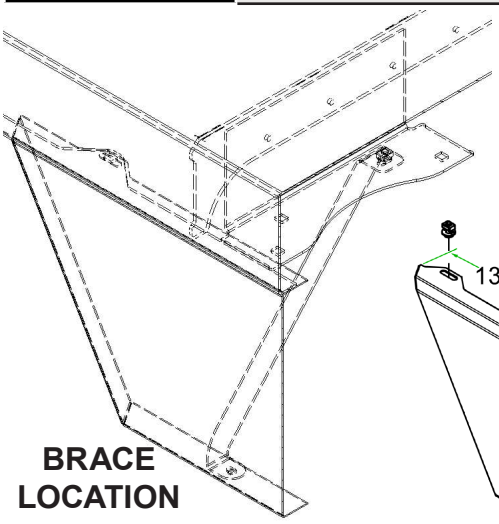

BRACE KITS have been added to shore up rear skirts. Utilize the hole as shown in the image to the left and drill a hole in the skirt at the appropriate place for your alignment.

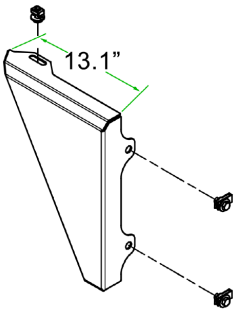

264062 PARTS LIST			
Item	Qty	Part #	DESCRIPTION
1	1	261117	F DRV, 13.1"
2	1	261118	F PSS, 13.1"
3	1	264048	KIT, FILLER SKIRT HARDWARE

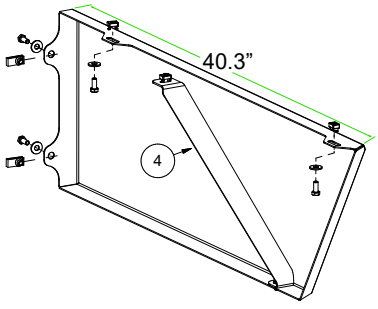

264088 PARTS LIST			A
Item	Qty	Part #	DESCRIPTION
1	1	261294	F DRV, 40.3"
2	1	261295	F PSS, 40.3"
3	1	264105	KIT, FILLER SKIRT HARDWARE
4	1	264135	KIT, SKIRT BRACES

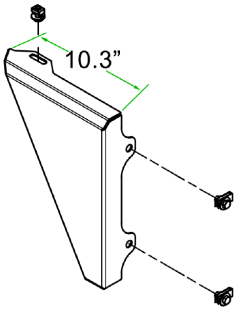

264049 PARTS LIST			A
Item	Qty	Part #	DESCRIPTION
1	1	261115	F DRV or R PSS, 10.3"
2	1	261116	R DRV or F PSS, 10.3"
3	1	264048	KIT, FILLER SKIRT HARDWARE

264047 PARTS LIST			B
Item	Qty	Part #	DESCRIPTION
1	1	261123	R DRV, 24.8”
2	1	261124	R PSS, 24.8”
3	1	264048	KIT, FILLER SKIRT HARDWARE
4	1	264135	KIT, SKIRT BRACES

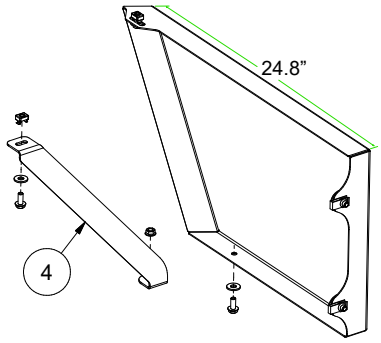

264053 PARTS LIST			A
Item	Qty	Part #	DESCRIPTION
1	1	261132	R DRV, 31.8”
2	1	261133	R PSS, 31.8”
3	1	264048	KIT, FILLER SKIRT HARDWARE
4	1	264135	KIT, SKIRT BRACES

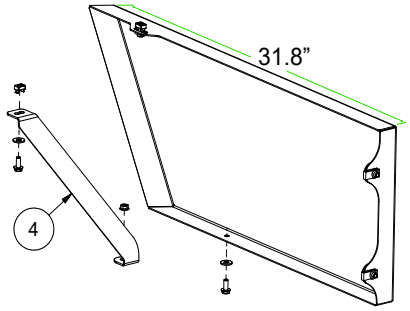

264054 PARTS LIST			A
Item	Qty	Part #	DESCRIPTION
1	1	261184	R DRV, 38.9”
2	1	261185	R PSS, 38.9”
3	1	264048	KIT, FILLER SKIRT HARDWARE
4	1	264135	KIT, SKIRT BRACES

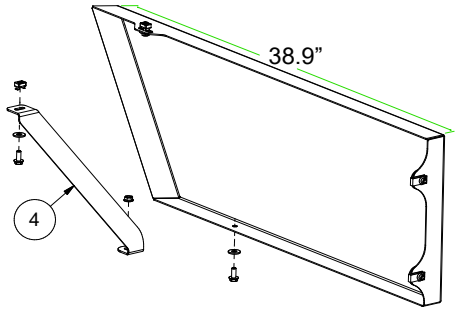

264051 (newest models use 264062)			A
Item	Qty	Part #	DESCRIPTION
1	1	261119	R PSS, 13.8”
2	1	261120	R DRV, 13.8”
3	1	264048	KIT, FILLER SKIRT HARDWARE

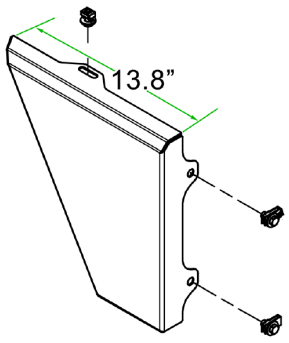

264055 (newest models use 264062)			A
Item	Qty	Part #	DESCRIPTION
1	1	261121	F DRV, 15.6”
2	1	261122	F PSS, 15.6”
3	1	264048	KIT, FILLER SKIRT HARDWARE

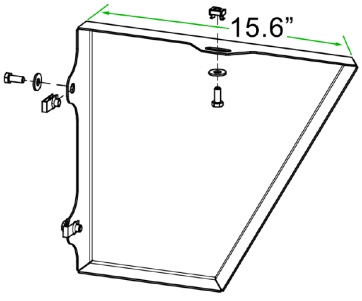

TOOLBOX SELECTION DETAILS

BED MODELS	FRONT TOOLBOX	REAR TOOLBOX	
	ALL BEDS	PIVOT	PARALLEL
870	14.5”	14.5”	18”
871	18”	14.5”	18”
876	30”	14.5”	18”
879	30”	18”	24”
976	30”	14.5”	18”
984	30”	18”	24”
988	2 x 30” or 60"	18”	24”

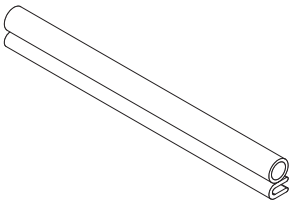



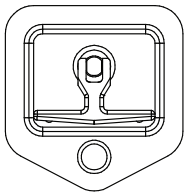

PART #	DESCRIPTION
102030	Toolbox Seal (sold by foot)
102053	Plug, Button 1.00
282011	Toolbox Latch

263001

30”

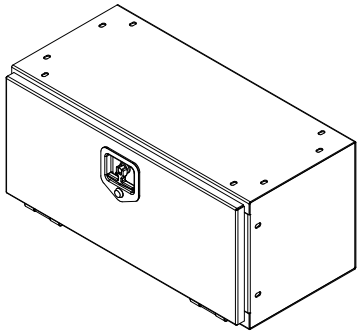

30 x 14 x 13.5”

263003

14.5”

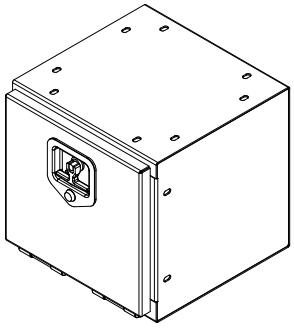

14.5 x 14 x 13.5”

263002

24”

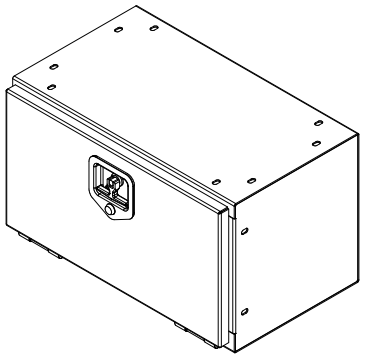

24 x 14 x 13.5”

263004

18”

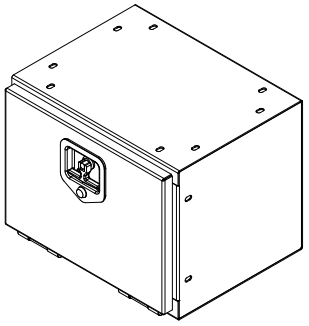

18 x 14 x 13.5”

210915

79 x 21.5 x 17.6”

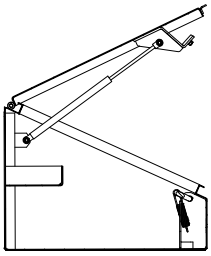

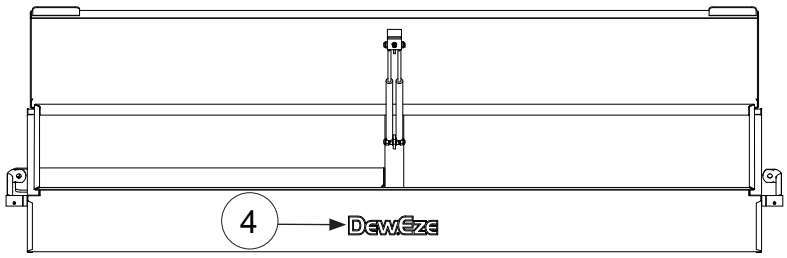

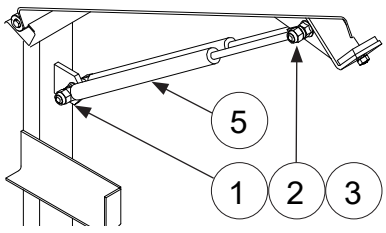

210915 PARTS LIST			
ITEM	QTY	PART #	DESCRIPTION
1	4	110618	NUT, 2/8-16 LOCK NYLON INSERT
2	4	110645	NUT, 3/8-16 WIZ FLANGE
3	2	210908	SHOCK MOUNT BOLT
4	1	400010	DECAL, DEWEZE BLACK OUTLINE
5	2	500078	SHOCK, GAS FILLED

TOOLBOX SELECTION DETAILS

272007

988 or XRT 84

60”

60 x 14 x 13.5”

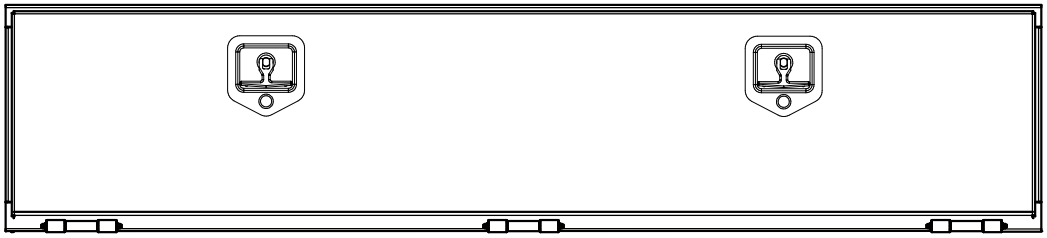

60" TOOLBOX INSTALL KIT

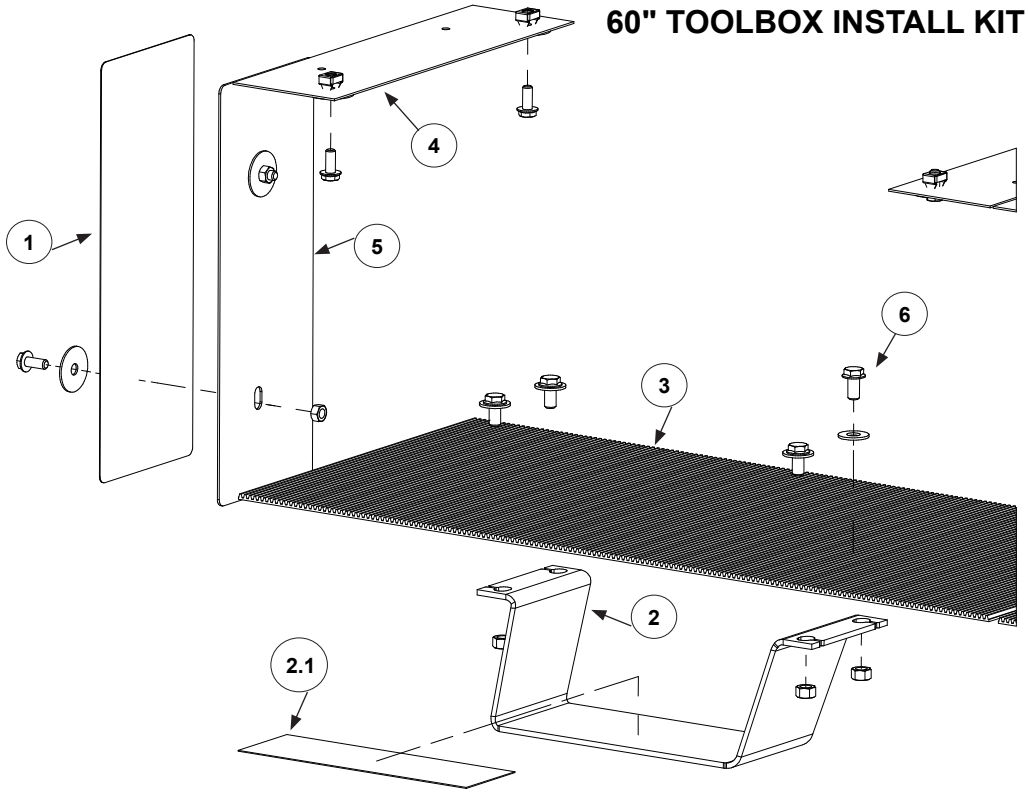

PARTS LIST: 60" Toolbox Install Kit: 264166			
ITEM	QTY	PART #	DESCRIPTION
1	2	202169	Decal, Chip Guard
2	4	211109	Step, Toolbox
2.1	1	215474	Traction Pad, Flex-Tread 2.75" X 0.75'
3	4	211119	Tool Box Mat
4	8	212003	Gasket, Toolbox Mount
5	2	261014	Plate, Chip Guard
6	1	264167	Kit, Toolbox Hardware, 60in.

264044 REV: D

FRONT TOOLBOX INSTALL KIT

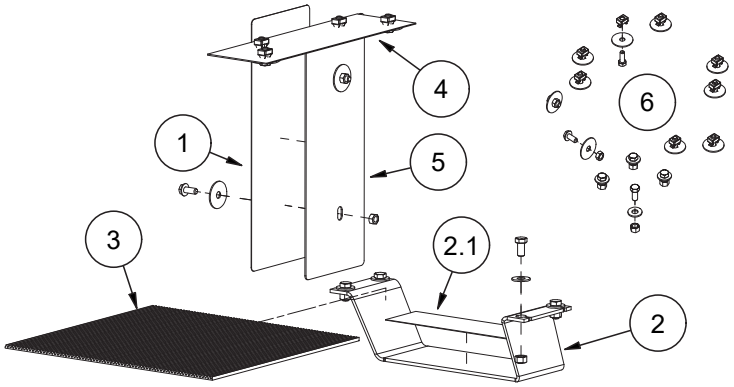

Parts List			Kit: 264044
ITEM	QTY	PART #	DESCRIPTION
1	2	202169	Decal, Chip Guard
2	2	211109	Step, Toolbox
2.1	1	215474	Traction Pad, Flex-Tread 2.75" X 0.75'
3	2	211119	Tool Box Mat
4	4	212003	Gasket, Toolbox Mount
5	2	261014	Plate, Chip Guard
6	1	264045	Kit, Toolbox Hardware, Front

264050 REV: F

REAR TOOLBOX INSTALL KIT

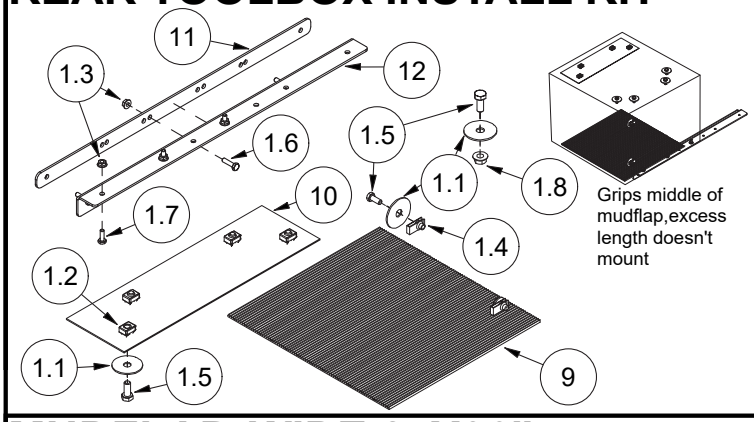

Parts List			Kit: 264050
ITEM	QTY	PART #	DESCRIPTION
1	1	264173	Hardware Kit, Toolbox Installation
1.1	20	110049	Washer, 5/16" X 1 1/2 Fender
1.2	8	110258	Nut, 5/16-18, Cage Tinnerman
1.3	12	110290	Nut, 1/4-20 Wiz Flange
1.4	4	110319	Nut, 5/16-18 U-Type .75l
1.5	20	110444	Bolt, 5/16-18 X .75 Wiz Flange
1.6	6	110464	Bolt, 1/4-20 X 1.0
1.7	6	110561	Bolt, 1/4-20 X .75
1.8	8	110606	Nut, 5/16-18 Wiz Flange
9	2	211119	Tool Box Mat
10	2	212003	Gasket, Toolbox Mount
11	2	261011	Backer Plate, Long
12	2	261203	Bracket, Mudflap, Wide

264040 REV: A

MUDFLAP, WIDE 24X36”

Mudflaps still mount to stringer (above toolbox)

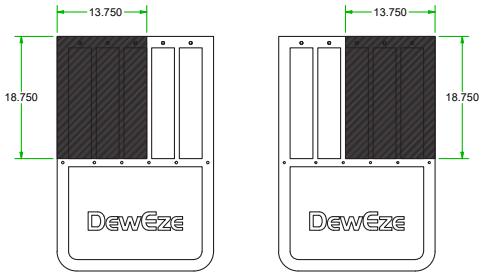

Cut and remove shaded areas for rear toolboxes

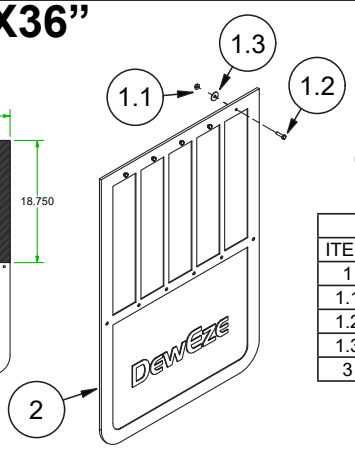



Parts List			
ITEM	QTY	PART #	DESCRIPTION
1	1	205456	KIT, BOLT MUDFLAP
1.1	10	110290	NUT, 1/4-20 WIZ FLANGE
1.2	10	110464	BOLT, 1/4-20 X 1.0
1.3	10	111033	WASHER, 1/4" X 1" OD, PLAIN
3	2	262001	MUDFLAP, WIDE

264041 REV: A

MUDFLAP, NARROW 20X36”

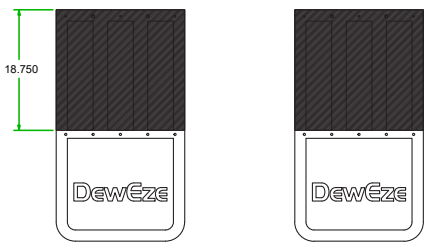

Cut and remove shaded areas for rear toolboxes

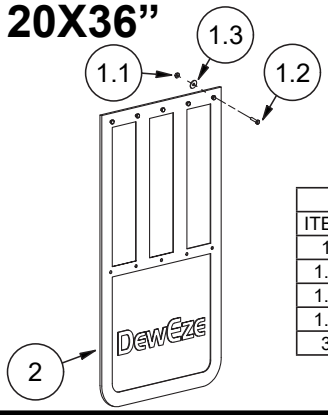



Parts List			
ITEM	QTY	PART #	DESCRIPTION
1	1	205456	KIT, BOLT MUDFLAP
1.1	10	110290	NUT, 1/4-20 WIZ FLANGE
1.2	10	110464	BOLT, 1/4-20 X 1.0
1.3	10	111033	WASHER, 1/4" X 1" OD, PLAIN
3	2	262002	MUDFLAP, NARROW

REAR VIEW CAMERA MOUNTING KITS *

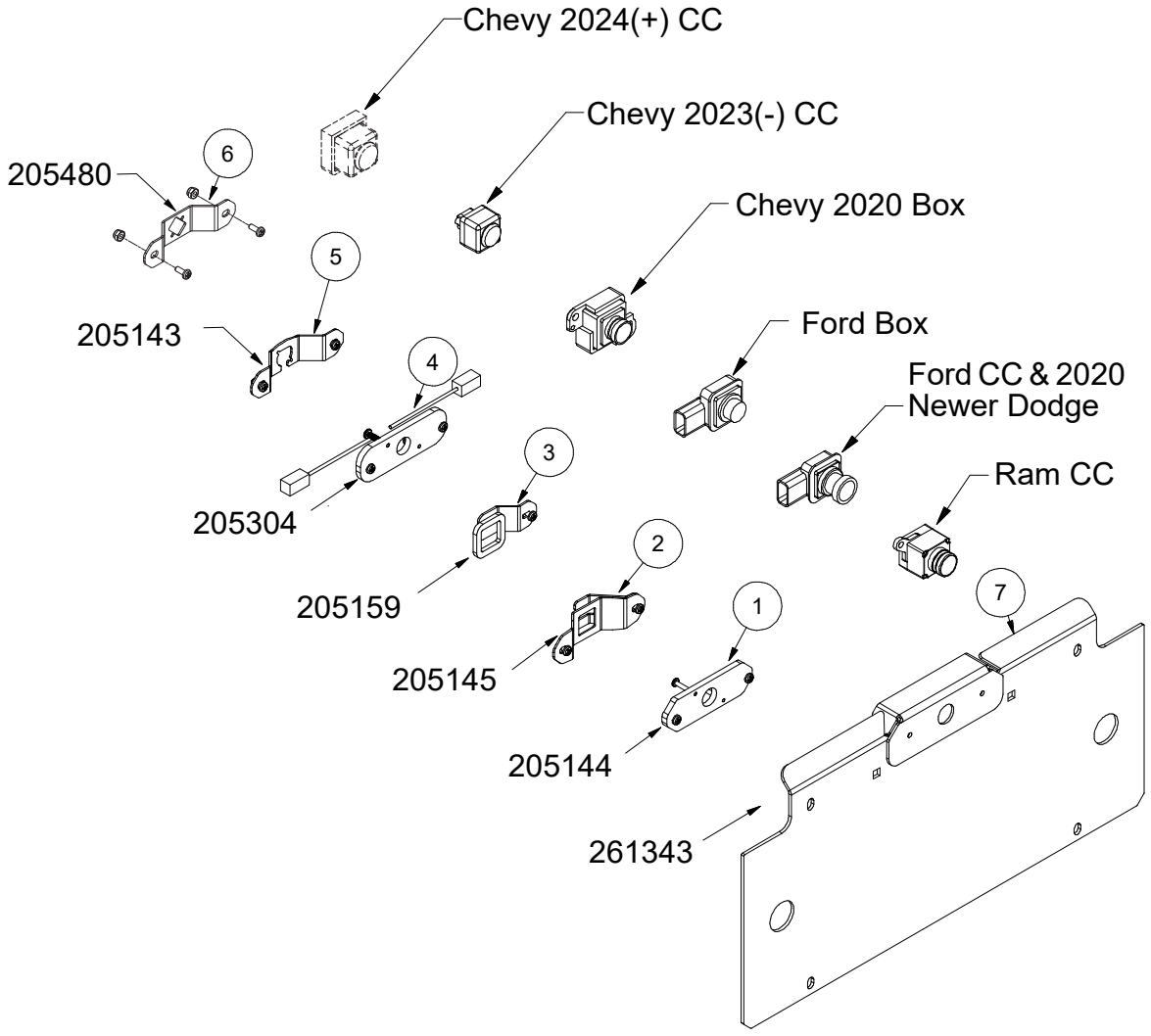

***Mount Disclaimer:** These mounting kits were designed for the most common mounting-to-camera. Manufacturers change camera styles & mountings even within the same year. Use best practices to modify if need be.

***Installer note:** DewEze does not engineer wiring nor harnesses for the camera. It is the installers' responsibility to trace the OEM cable to re-attach.

Item	Qty	Part #	DESCRIPTION
1	1	205144	Dodge/Ram CC Camera Mount Kit
2	1	205145	Ford Camera & Dodge 2020+ Mount Kit
3	1	205159	Ford Box Take-Off Camera Mount Kit
4	1	205304	Chevy/ GM 2020 Box Take-Off Camera Mount Kit
5	1	205143	Chevy/GM CC 2023- Camera Mount Kit
6	1	205480	Chevy/GM CC 2024+ Camera Mount Kit
7	1	261343	Camera Mount Weldment

BED MOUNTING KITS

NOTE: Red highlighted kits have not been engineered. Examples of these trucks have not been made available to the factory engineers.

MAKE	PART #	YEAR	DESCRIPTION
FORD	205435	2017+	Ford BTO 871, 876, 976
	205441	1996-2016	Ford BTO 871
	205432	1999-2016	Ford BTO 876, 976
	205430	2017+	**Add-on** for **205459** or **205461** outboard DEF tank
	205459	2017+	Ford Cab-Chassis 879, 984
	205460	1999-2016	Ford Cab-Chassis 879, 984
	205461	2017+	Ford Cab-Chassis 988
	205462	1999-2016	Ford Cab-Chassis 988
CHEVY GMC	205453	2020+	Chevy BTO 871
	205451	2011-2019	Chevy BTO 871
	205468	2000-2010	Chevy BTO 871
	205452	2020+	Chevy BTO 876, 976
	205440	2011-2019	Chevy BTO 876, 976
	205442	2000-2010	Chevy BTO 876, 976
	205458	2011+	Chevy Cab-Chassis 984
	205465	2000-2010	Chevy Cab-Chassis 984
	205463	2011+	Chevy Cab-Chassis 988
	205466	2019+	Chevy Cab-Chassis 984 (4500-5500) XRT 60
	205467	2019+	Chevy Cab-Chassis 988 (4500-5500)
DODGE RAM	205434	2019+	Dodge BTO 870
	205437	2014-2018	Dodge BTO 870
	205469	2003-2013	Dodge BTO 870
	205439	2003-2013	Dodge BTO 876, 976
	205433	2019+	Dodge (3500) BTO 876, 976
	205436	2014+	Dodge (2500) BTO 876, 976
	205438	2014-2018	Dodge (3500) BTO 876, 976
	205455	2007+	Dodge Cab-Chassis 879, 984
	205457	2007+	Dodge Cab-Chassis 988
Misc.	205029		Yellow Bag & Contents *(applicable to older truck models not listed above)*

BED STRINGER MEASUREMENTS

STRINGERS FOR: _79, _84, _88

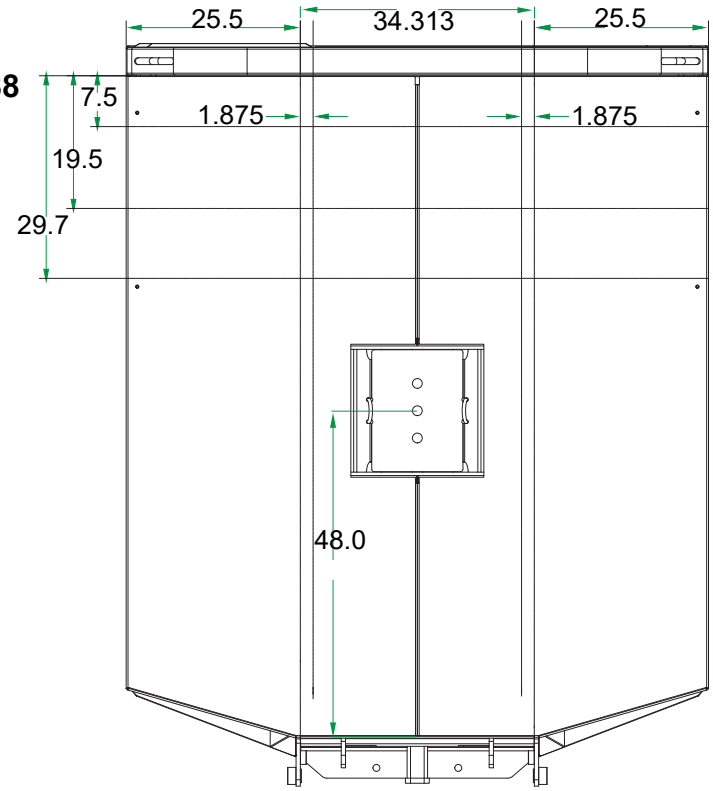

STRINGERS FOR: _76

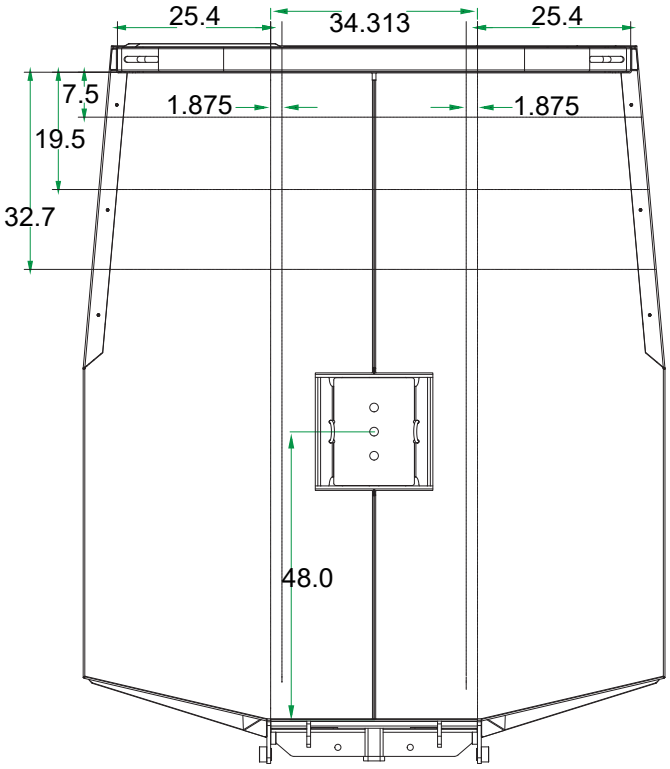

Service Only: Engineering Print Reference							
		STND	XRM	F-B Beams	Hitch-Rear	Width F	Wide B
870	Pivot	265070	265070	34.313	47.625	85.375	
871	Pivot	265083	265083	34.313	47.625	85.375	
876	Pivot	265024	265024	34.313	47.625	85.375	
879	Pivot	265084	265084	34.313	47.625	85.375	
976	Pivot	265023	265023	34.313	47.625	87.234	96.5
984	Pivot	265022	265022	34.313	47.625	87.139	96.5
988	Pivot	265085	265085	34.313	47.625	87.56	96.5
870	Parallel	265086	265092	34.313	47.625	85.375	
871	Parallel	265087	265093	34.313	47.625	85.375	
876	Parallel	265088	265094	34.313	47.625	85.375	
879	Parallel	265089	265095	34.313	47.625	85.375	
976	Parallel	265090	265096	34.313	47.625	87.234	96.5
984	Parallel	265047	265097	34.313	47.625	87.139	96.5
988	Parallel	265091	265098	34.313	47.625	87.56	96.5

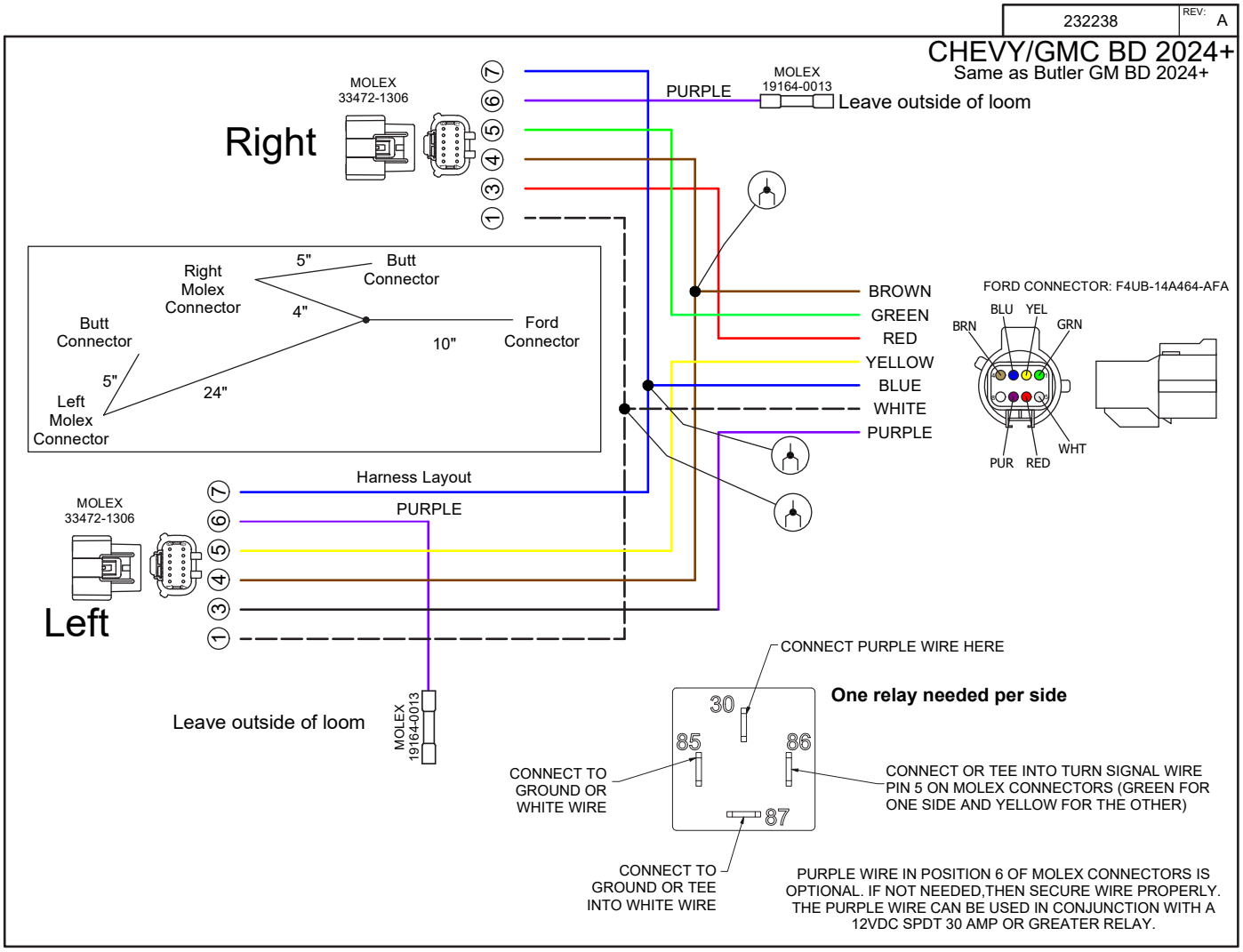
232238
REV: A
CHEVY/GMC BD 2024+
Same as Butler GM BD 2024+
Right
MOLEX 33472-1306
PURPLE
MOLEX 19164-0013
Leave outside of loom
Right Molex Connector
5"
Butt Connector
4"
Butt Connector
Ford Connector
10"
5"
24"
Left Molex Connector
BROWN
GREEN
RED
YELLOW
BLUE
WHITE
PURPLE
FORD CONNECTOR: F4UB-14A464-AFA
BLU
YEL
BRN
GRN
WHT
PUR
RED
Harness Layout
MOLEX 33472-1306
PURPLE
Left
Leave outside of loom
MOLEX 19164-0013
CONNECT PURPLE WIRE HERE
One relay needed per side
30
85
86
87
CONNECT TO GROUND OR WHITE WIRE
CONNECT OR TEE INTO TURN SIGNAL WIRE PIN 5 ON MOLEX CONNECTORS (GREEN FOR ONE SIDE AND YELLOW FOR THE OTHER)
CONNECT TO GROUND OR TEE INTO WHITE WIRE
PURPLE WIRE IN POSITION 6 OF MOLEX CONNECTORS IS OPTIONAL. IF NOT NEEDED,THEN SECURE WIRE PROPERLY. THE PURPLE WIRE CAN BE USED IN CONJUNCTION WITH A 12VDC SPDT 30 AMP OR GREATER RELAY.

NOTES

Harper Industries, Inc.
151 E. Highway 160
Harper, KS 67058

Telephone: 620-896-7381
Toll-Free: 800-835-1042
Fax: 620-896-7129

Website: www.harperindustries.com

E-mail: info@harperindustries.com