600/700 SERIES

COMPLETE

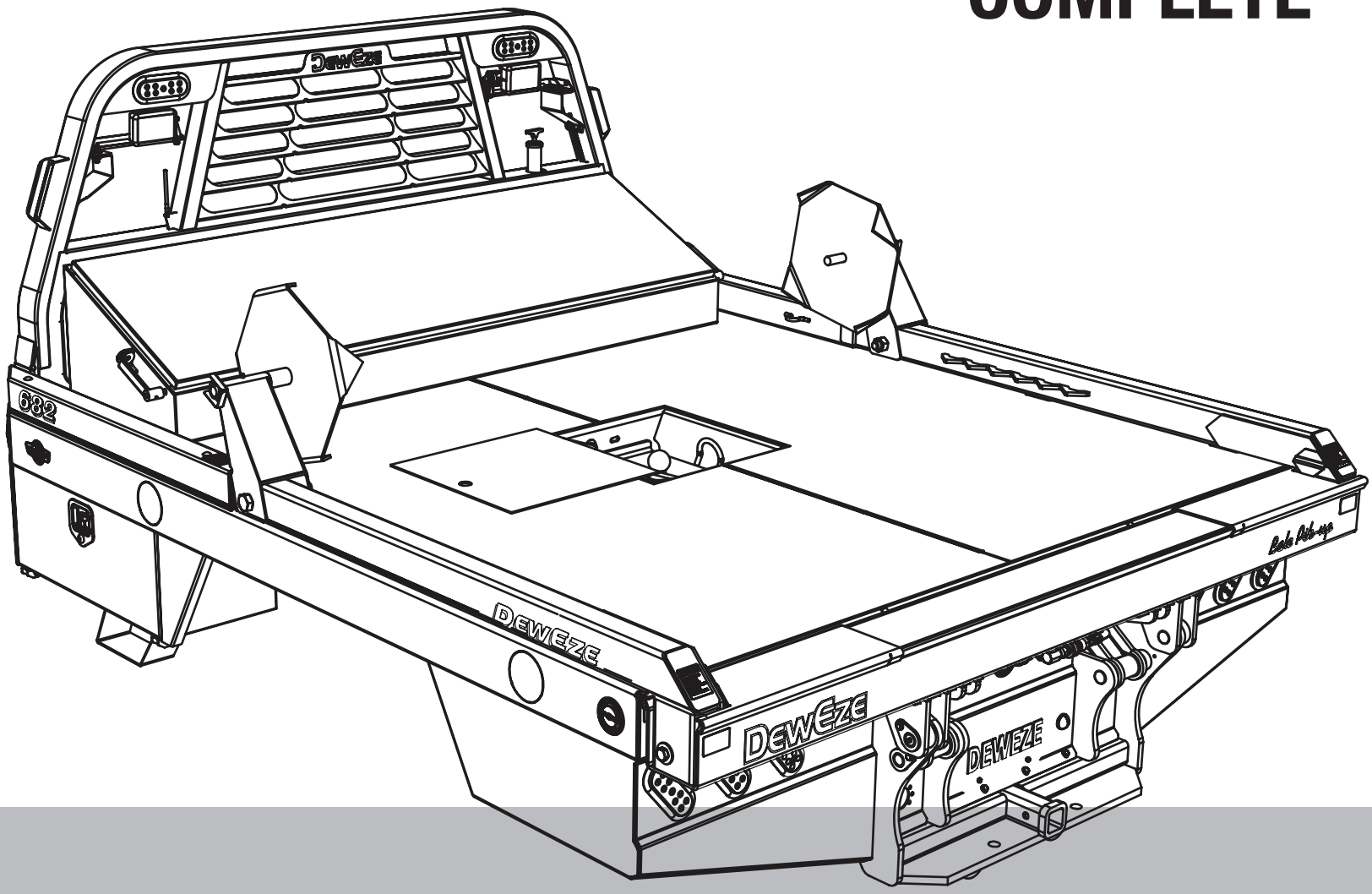

DewEze®

10-2026

HARPER INDUSTRIES INC

Thank you for purchasing a DewEze Flatbed.

TO THE OWNER OR OPERATOR:

As with all Harper products, the 600 and 700 Series Flatbeds have been thoroughly tested and built to provide a sturdy, dependable product. The Flatbed is equipped with live hydraulics, which allows it to be used for a wide range of lifting and hauling tasks. This manual is written as an aid to operating and maintaining the DewEze Flatbed. Read and understand the manual thoroughly before operation to avoid damage to the unit or injury to the operator or bystanders.

A Flatbed can present hazards to an operator who follows unsafe procedures in either the operation or maintenance of the unit. Therefore, **SAFETY WARNINGS** are present at certain locations in the text. Harper Industries is not responsible for accidents or injuries that result from the misuse or lack of maintenance of the Flatbed.

SYMBOL: ⚠ **SAFETY WARNING!** ⚠

MEANING: Failure to understand and obey this warning may result in injury to you or others. Whenever this symbol is used, please pay very close attention to the information presented, and make sure you fully understand. If you do not, contact your dealer or Harper Industries for clarification.

HARPER INDUSTRIES, INC.

151 E. HWY. 160 Harper, KS 67058
(620) 896-7381 • **Fax** (620) 896-7129
Toll Free 800-835-1042
Email info@deweze.com
Website www.deweze.com

© 2026 Harper Industries, Inc.
The Harper and DewEze names and the ATM logo are registered trademarks of Harper Industries, Inc. All other brand and product names are trademarks or registered trademarks of their respective companies.

Statement of Warranty 1/11/2025

Harper Industries, Inc. (HII) warrants to each purchaser of new DewEze Truck Bodies from an authorized dealer or representative, that such equipment is free of manufacturer's defects in workmanship and materials which appear while in normal service for a period of TWO YEARS commencing with delivery to the original user. The Flatbed hydraulic and electrical systems are warranted for a period of ONE YEAR.

The obligation of HII under this warranty is expressly limited, at our option, to replacement or repair at a service facility designated by Harper Industries or at the manufacturing plant in Harper, KS. A part will be replaced after inspection discloses it to have been defective. This warranty does not apply to defects caused by damage or unreasonable use (including failure to provide reasonable and necessary maintenance, or by performing functions without genuine DewEze Flatbed accessories) while in the possession of the consumer.

Warranty is limited to parts, labor and ground freight delivery of replacement parts. HII shall not be liable for the consequential damages of any kind, including but not limited to consequential labor costs or transportation charges in connection with replacement or repair of defective parts.

This warranty does not apply to parts subjected to misuse, abuse, alteration, improper or inadequate maintenance, or normal wear (including belts, battery, chains, filters).

ANY IMPLIED OR STATUTORY WARRANTIES, INCLUDING ANY WARRANTY OR MERCHANTABILITY OR FITNESS FOR A PARTICULAR PURPOSE, ARE EXPRESSLY LIMITED TO THE DURATION OF THIS WRITTEN WARRANTY. HII makes no other express warranty, nor is anyone authorized to make any on behalf of HII.

For further information please contact your nearest DewEze dealer.

RECORDS

Date of Purchase _____ / _____ / _____

Dealer's Name _____

Dealer's Phone _____

Serial Number Bed____ _____

Serial Number Pump_ _____

Table of Contents

OPERATOR SECTION
To the Owner or Operator..... 3
Warranty Statement..... 4
Table of Contents..... 5
Specifications..... 6
Feature Identification..... 7-8
Safety Guidelines
General Equipment Safety..... 8
Flatbed Operation Safety..... 8
Hydraulic Safety..... 9
Operating Instructions
Beginning Operation..... 9
Loading..... 9
Extending (option)..... 9
Unloading..... 9
Unrolling..... 10
Storing the arms..... 10
Turning System Off..... 10
Maintenance
Check Daily or Before Use..... 10
Lubrication..... 10
Hydraulic Oil..... 11
Hydraulic System..... 11
GatorHyde Protective Coating..... 11
Remote Control..... 11
Power Unit..... 11
Troubleshooting..... 12

PARTS SECTION
600/700 Parts
Dummy Arms..... 15
Common Bed Parts..... 16
Crosstube & Arms: Parallel (STD-XRM)..... 17
Crosstube & Arms: Pivot (STD-XRM)..... 18
Common Lift Cylinder & Linkage..... 19
Squeeze Cylinders: Parallel..... 20
Squeeze Cylinders: Pivot..... 21
XRM Extend Cylinders..... 22
Spinners & Risers..... 23
Hydraulics
Spade Valve, Filter, & 3rd Bank..... 24-25
Deutch Valve, Filter, & 3rd Bank..... 26-27
Hydraulic Reservoir..... 28
Hydraulic Schematic..... 29
Hoses, Hose Routing & Parts..... 30-33
Electrical
Valve Switches & Kit..... 34
Clutch Switch Assembly..... 35
Harness Infographics..... 36-37
Harness Adapters: OEM to Deweze..... 38
Worklights..... 39-40
Controls
Corded Remotes: 2 & 3 Bank - Spade..... 41-42
Corded Remotes: 2 & 3 Bank - Deutch..... 43
Wireless Remote (Kar-Tech)..... 44
Wireless Schematic - Spade..... 45
Wireless Schematic - Deutch..... 46
Wireless Schematic - 3rd Bank..... 47
E/H
Standard E/H..... 48-49
HD E/H..... 50
HD E/H Deutch Wiring Illustration..... 51
HD E/H Spade Wiring Illustraion (Corded)..... 52
HD E/H Spade Wiring Illustraion (Wireless).... 53
Toolboxes & Skirts
Toolbox E/H Modification..... 54
Front Skirt Toolbox Replacement..... 55
30” w/Step & Fender Skirts..... 56
20” w/Step..... 57
17” Left & Right..... 58
12” Left & Right..... 59
770 Model Left & Right..... 60
Across-the-Bed..... 61
Decals..... 62-63
Rear View Camera Mounting Kits..... 64
Bed Mounting Kits..... 65
Accessories: 4’ Bale Adapter, Receiver Hitch, Lift Bar... 66
Appendices
I GatorHyde Repair..... 67
II Remote Control..... 68-69
III Standard E/H Install..... 70-71
IV HD E/H Install..... 72-73
V XRM Adapter Update..... 74

Specifications

DewEze flatbeds are specifically designed to transport and feed round hay bales.

Model Specifications

MODEL	670	671	675	676	677	679	682	684
WIDTH	7’ 1”	7’ 1”	7’ 1”	7’ 1”	7’ 1”	7’ 1”	7’ 9”	7’ 9”
LENGTH	7’ 2”	7’ 7”	8’ 6”	8’ 11”	9’ 4”	9’ 8”	9’ 4”	9’ 8”
WEIGHT	2020#		2070#	2120#	2170#	2220#	2270#	2420#

687	688
7’ 9”	7’ 9”
11’ 6”	11’ 10”
2540#	2670#

MODEL	770	778	776	782	784	787	788
WIDTH	8’	8’	8’	8’	8’	8’	8’
LENGTH	7’ 2”	8’ 6”	8’ 11”	9’ 4”	9’ 8”	11’ 6”	11’ 10”
WEIGHT	2070#	2120#	2195#	2270#	2420#	2540#	2670#

*** Length of all flatbeds includes 6” for crosstube.**

**** Add 250 lbs. for extendable arm option.**

Hydraulic System Specifications

HYDRAULIC	Powered by engine driven pump or self contained battery-powered electric/hydraulic unit
SYSTEM PRESSURE	2450 psi
OIL RESERVOIR CAPACITY	10 gallons
OIL FILTER	Deweze 720043, WIX 51551 (10 micron)
CYLINDER, LIFT (2)	3.50” x 16.62”
CYLINDER, SQUEEZE	2.00” x 34.00” (670, 675, 676, 677, & 679) 2.00” x 35.75” (682, 684, 687, & 688) 2.00” x 39.25” (770, 776, 778, 782, 784, 787, & 788)
CYLINDER, EXTENDIBLE*	2.00” x 20.0” (left side)
CYLINDER, EXTENDIBLE*	2.50” x 20.0” (left side)

*** Cylinders used for extendible arms are optional.**

Protective Coating

PAINT	Heat-treated, polyurethane based paint
GATORHYDE	Long-lasting, textured polyurea surface

Feature Identification

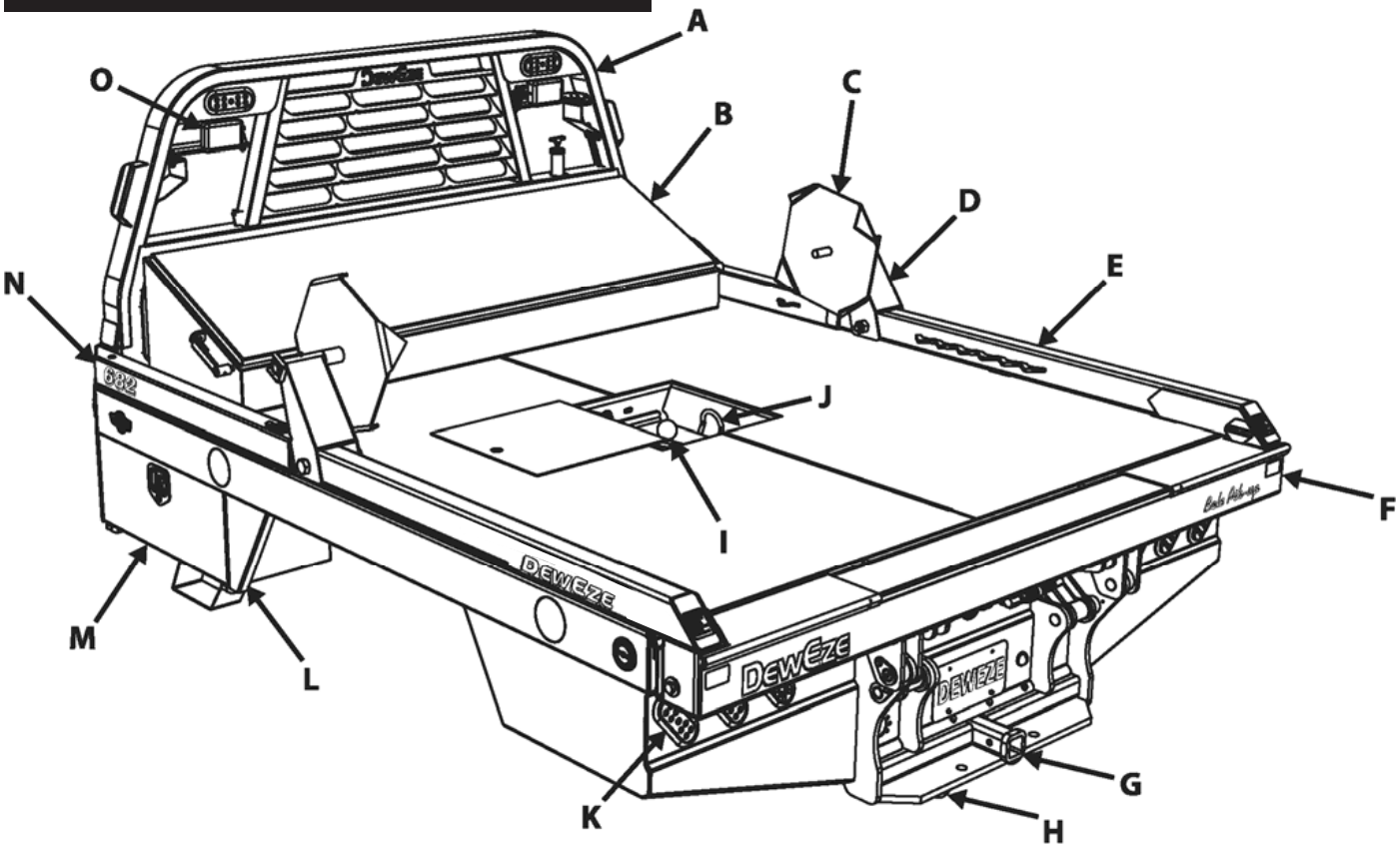

A. Headache Rack – protects the rear pickup window. The hydraulic oil tank and valve are located in the headache rack.

B. Across-the-bed Toolbox (optional) – measures 78” wide, 15.5” tall and 21.5” deep and has a shelf mounted inside.

C & D. Spinners & Risers (optional) – used to unroll hay. The risers allow the hugger arms to lie flat on the bed with the spinners attached.

E. Hugger Arms – squeeze together to grip the bale and lift it onto the flatbed. When the arms are stored they serve as side rails for the flatbed.

F. Crosstube – houses the squeeze cylinder and guides the hugger arms.

G. Hitch Plate – allows for a 2” square receiver hitch and has holes for hitch pins.

H. Safety Chain Loops – always use safety chains when towing.

I. Gooseneck Hitch – located under a cover plate in the middle of the bed.

J. Safety Chain Loops – always use safety chains when towing.

K. Lights – LED lighting for stop-tail-turn has long life and low current draw.

L & M. Skirts & Toolboxes (optional) – mount under front of bed on both sides. The Electric/Hydraulic Power unit mounts inside the left toolbox.

N. Dummy Arms – serve as side rail along with hugger arms.

O. Swing Lights (optional) – lights can be pivoted out wider than the bale when working at night.

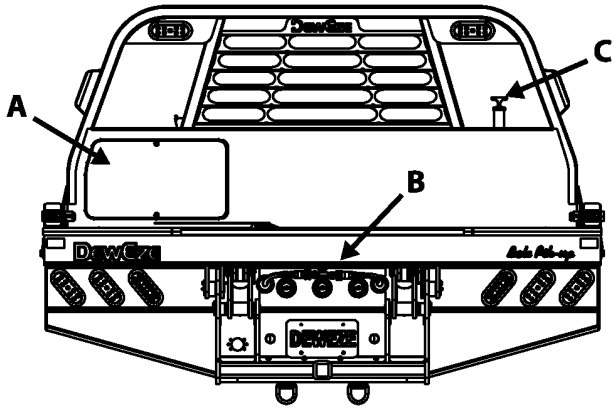

A. Valve Compartment – houses the hydraulic control valve, hydraulic oil filter and the radio frequency receiver.

B. Pioneer Couplers – connect hydraulic hoses to the squeeze cylinder – may also be used to connect to implements.

C. Hydraulic Oil Fill & Dipstick – check hydraulic oil level with dipstick – fill here when necessary.

Remote Control Transmitter – operates all functions of the flatbed – uses two AA batteries.

SAFETY WARNING!

Do not stand under the hugger arms when operating the bale pickup unit, even when arms are empty.

Safety

Operator safety is of upmost concern when designing and developing a new piece of equipment. Designers and manufacturers build in as many safety features as possible. However, every year many accidents occur which could have been avoided by a few seconds of thought and a more careful approach to handling equipment. Most accidents can be avoided by observing the precautions in this section. To avoid personal injury, study the safety warnings and cautions listed in this manual and follow them.

General Equipment Safety

- This equipment can be dangerous to children and persons unfamiliar with its operation. The operator should be a responsible adult familiar with farm machinery and trained for this unit.
- Do not attempt to operate equipment under the influence of drugs or alcohol.
- Do not allow persons to operate or assemble this unit until they have read this manual and have developed a thorough understanding of the safety precautions and how the unit works.
- Review the safety warnings and cautions with all users annually.

If you have any questions not answered in this manual or require additional copies, contact your dealer or Harper Industries.

Flatbed Operation Safety

- Replace any CAUTION, WARNING, DANGER or instruction decal that is not readable or is missing.
- Make sure all safety pins are in place and flatbed mounting bolts are secure to the truck frame.
- Make sure hinges, joints, and sliding parts are well greased, especially during off season to prevent rusting and binding.

- Check with truck dealer for any load limits, additional suspension or tire requirements. The flatbed's lifting capability may exceed the truck's load capacity in some instances.

Hydraulic Safety

- Do not operate the hydraulic system with the hood open.
- Do not activate the electric clutch unless the truck engine is at idle. Operating the clutch at road speeds can damage the hydraulic system.

SAFETY WARNING!

Hydraulic system operates under high pressure and escaping fluid can penetrate the skin.

Operating Instructions

Beginning Operation

- Turn the pump switch on the dash to the "ON" position. (Red light will indicate that pump is on).

CAUTION: In cold weather, let engine idle for 5-10 minutes with pump on before operating arms to warm oil. Neglecting to do so may cause hydraulic pump failure.

- Press and hold the power button on the transmitter until both LEDs turn on, then release.
- The green LED will flash rapidly when the communication has been established. If the receiver is off, the red LED will flash slowly.
- Press the corresponding buttons on the transmitter keypad to turn on and off each of the outputs.

Loading

- Back truck against bale with the arms wide apart and tilted slightly upward.
- Squeeze arms firmly against the bale.
- Lift the bale onto the truck.
- Release the bale and repeat the operation for the second bale.

CAUTION: When hauling one bale, make sure it is held tightly and rests on the bed. When hauling two bales make sure the second bale is as far forward as possible (Fig. 1). Carrying a bale behind the bed, as show in Fig 2, places excessive stress on the cylinder, linkage, and pins.

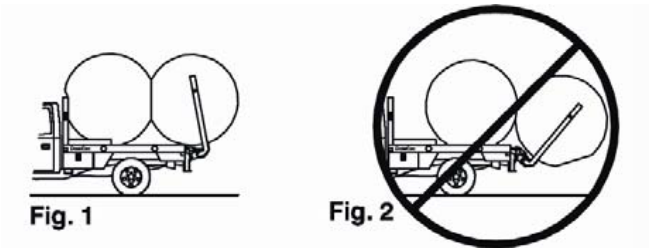

CAUTION: Do not exceed GVRW rating of truck when loading.

Extending (option)

- Always squeeze the bale with the arms in the retracted position.
- Extend the arms and release the bale.
- Fully retract the arms before laying them on the bed.

CAUTION: Squeezing the bale when the arms are extended puts excessive force on the arms and cross-tube and may result in bending the unit.

Unloading

- To unload, do the reverse of the loading operation.
- Spinners may sometimes be needed to grip the front bale for unloading.

Unrolling (option)

- Use risers and spinners to unroll a bale.
- Position the arms over the bale so the spinners are at the center of the bale.
- To unroll, lower the bale to the ground.
- Turn the pump off and push the FLOAT switch on the remote control.
- Slowly drive STRAIGHT forward. The bale will gradually unroll.

CAUTION: Turning while unrolling a bale may cause hugger arms to bend.

CAUTION: Failure to use FLOAT while unrolling may damage flatbed frame or lift cylinder. The FLOAT switch on the remote transmitter stays on until it is pressed a second time or another switch is activated. To avoid power loss, always deactivate the FLOAT when not in use.

Storing the Arms

- Close the arms partially and lay them on the flatbed.
- Open the arms until they are flush with the side of the bed. They now function with the dummy arms as side rails.

Turning System Off

- Turn the pump off when it is not in use.
- The remote control turns itself off automatically after 10 minutes.

CAUTION: Operating truck at road speeds or above 2,000 RPM with pump engaged may cause hydraulic pump failure.

Maintenance

Check Daily or Before Use

- Check the hydraulic oil level. Keep the level to “FULL” on the dipstick.
- Check the belt, belt tensioner and idler pulleys on engine clutch pump system.
- Examine the hydraulic hoses for leaks with an object such as cardboard.

SAFETY WARNING!

Hydraulic fluid escaping under pressure can penetrate the skin and may cause death if not treated immediately.

Lubrication

Grease the locations indicated in the illustrations below once per week while the unit is in use and at the end of each season (same locations on right and left).

1. Lift cylinder – rod end
2. Cross-tube hinge
3. Idler arm base
4. Idler link pin

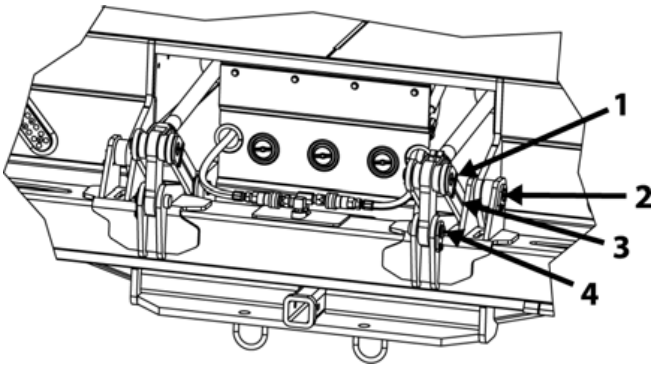

SAFETY WARNING!

Use extreme caution when greasing the flatbed. Completely lower arms to expose rear zerks and turn off ignition.

5. Riser (option)
6. Lift cylinder – base end

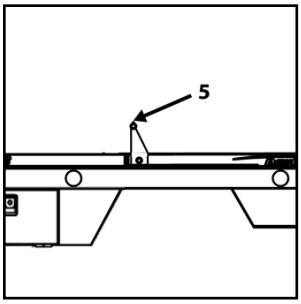

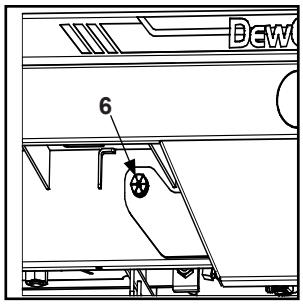

Hydraulic Oil

- Hydraulic fluid selection will affect the performance of the hydraulic system.

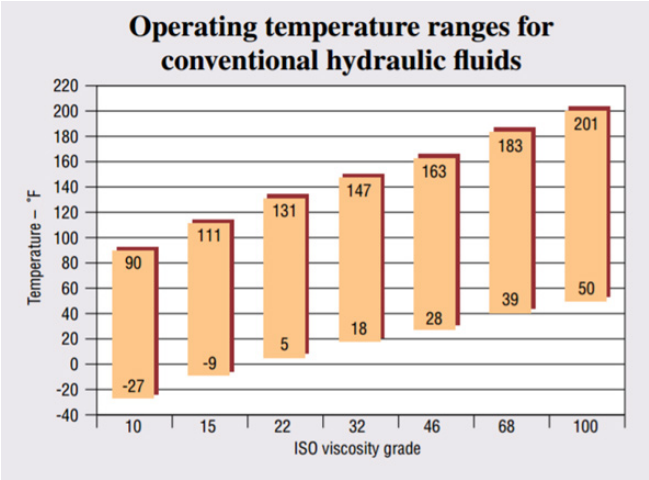

- Consult your local oil supplier for help in selection of a hydraulic fluid appropriate for your area. Consideration will also need to be given as to whether the system is a clutch pump or electric over hydraulic.
- Change the hydraulic oil filter after the first 40 hours of use and then every 250 hours, or annually thereafter.
- Change the hydraulic oil if it becomes contaminated or turns milky in appearance.
- If other hydraulic equipment is connected to the system, the oil will intermix and cold weather viscosity may be lost.

Hydraulic System

- If the quick-couplers leak, the o-rings may need to be replaced.
- High heat, 190° or greater, can be damaging to the hydraulic system. Feel various parts of the system to make sure there are no “hot spots” which may indicate a problem.
- In the off season, run the bed at least twice a month to prevent valve condensation.
- For easy hookup of the couplers, turn the pump switch off and activate the control valve switches with the ignition on. This will release pressure in the lines.

GatorHyde Protective Coating

- In the event that damage should occur to the GatorHyde protective coating, repair materials are available from your DewEze dealer to fix small areas. Follow the instructions provided in Appendix I.

Remote Control

- The remote control transmitter has two LED indicators, the green TRANSMIT indicator and the red BATTERY / DIAGNOSTIC indicator.
- The green TRANSMIT indicator flashes rapidly whenever there is communication between the transmitter and the receiver.
- The red BATTERY / DIAGNOSTIC indicator starts blinking once every second when the battery voltage is low and requires replacement. It also blinks when there is a problem with the system in the form of an error code. Refer to the ERROR CODE CHART in Appendix II.
- To synchronize a new transmitter and receiver together, refer to the TEACH ID CODE instructions in Appendix II.

Power Unit

- If the flatbed is powered with a DewEze Under-the-Hood hydraulic system, refer to the following chart when troubleshooting.
- See Appendix III if the flatbed is powered with the Electric/Hydraulic power unit.

Troubleshooting

Problem	Symptom	Possible Solutions
Hydraulic Pump	No Oil Flow	• CHECK OIL LEVEL IN RESERVOIR. If oil level is low, check for leaks in system then re-fill to FULL. • CHECK BELT TENSION. Replace tensioner or tighten idlers if needed. Replace belt if worn. • CHECK FOR SHEARED KEY ON PUMP SHAFT. Replace key. • CHECK IF SUCTION HOSE COLLAPSES IN SUCTION. Locate and remove obstruction. • CLUTCH NOT FUNCTIONING. See possible clutch solutions. • INTERNAL PUMP DAMAGE. **Seek assistance from dealer.**
Hydraulic Pump	No Oil Pressure	• HYDRAULIC OIL LEAKS IN SYSTEM. Take safety precautions and check for leaks. Tighten fittings and replace damaged hoses. • CHECK FOR MALFUNCTIONING SWITCH. Replace switches. • BELT OR CLUTCH MAY BE SLIPPING. Replace tensioner or tighten idlers if needed. Replace belt if worn. • VALVE NOT FUNCTIONING. Check for disconnected wires at solenoid or rusted ground wires. **Seek assistance from dealer if valve continues to be unresponsive.** • PRESSURE RELIEF MAY BE SET TOO LOW OR BROKEN. **Seek assistance from dealer. CAUTION: PRESSURE EXCEEDING 2,750 PSI CAN DAMAGE THE PUMP.** • PUMP IS WORN OR DAMAGED. **Seek assistance from dealer.**
Clutch	Does Not Engage	• CHECK FOR BLOWN FUSE. Replace fuse. **CAUTION: FUSE SHOULD NOT EXCEED 30 AMPS** • CHECK WIRE TO CLUTCH. Insure there are no breaks or shorts. • CHECK FOR BAD SWITCHES IN SYSTEM. Replace switches. • CLUTCH IS WORN OUT. **Seek assistance from dealer.**
Belt(s)	Jumps Off Pulley	• BELT(S) TOO LOOSE. Replace tensioner or tighten idler pulleys. • CHECK FOR EXCESSIVE BELT WEAR. Replace worn belt(s). • CHECK FOR LOOSE PUMP BRACKET. Tighten loose bolts. Replace broken bolts. • CHECK CRANKSHAFT PULLEY FOR LOOSE OR BROKEN BOLTS. Tighten loose bolts. Replace broken bolts. • CHECK ALIGNMENT OF IDLER PULLEYS AND CONDITION OF BEARINGS. Re-align idler pulleys or replace worn idler pulleys. • CHECK ALIGNMENT OF CLUTCH AND CRANKSHAFT PULLEY. **If misalignment is visible, seek assistance from dealer.**

SAFETY WARNING!

Use extreme caution when inspecting an engine. Serious injury or death could result from getting too close! Remove key from ignition when servicing.

DewEze®

600/700 SERIES

PARTS

Table of Contents

PARTS SECTION
600/700 Parts
Dummy Arms..... 15
Common Bed Parts..... 16
Crosstube & Arms: Parallel (STD-XRM)..... 17
Crosstube & Arms: Pivot (STD-XRM)..... 18
Common Lift Cylinder & Linkage..... 19
Squeeze Cylinders: Parallel..... 20
Squeeze Cylinders: Pivot..... 21
XRM Extend Cylinders..... 22
Spinners & Risers..... 23
Hydraulics
Spade Valve, Filter, & 3rd Bank..... 24-25
Deutch Valve, Filter, & 3rd Bank..... 26-27
Hydraulic Reservoir..... 28
Hydraulic Schematic..... 29
Hoses, Hose Routing & Parts..... 30-33
Electrical
Valve Switches & Kit..... 34
Clutch Switch Assembly..... 35
Harness Infographics..... 36-37
Harness Adapters: OEM to Deweze..... 38
Worklights..... 39-40
Controls
Corded Remotes: 2 & 3 Bank - Spade..... 41-42
Corded Remotes: 2 & 3 Bank - Deutch..... 43
Wireless Remote (Kar-Tech)..... 44
Wireless Schematic - Spade..... 45
Wireless Schematic - Deutch..... 46
Wireless Schematic - 3rd Bank..... 47
E/H
Standard E/H..... 48-49
HD E/H..... 50
HD E/H Deutch Wiring Illustration..... 51
HD E/H Spade Wiring Illustraion (Corded)..... 52
HD E/H Spade Wiring Illustraion (Wireless).... 53
Toolboxes & Skirts
Toolbox E/H Modification..... 54
Front Skirt Toolbox Replacement..... 55
30” w/Step & Fender Skirts..... 56
20” w/Step..... 57
17” Left & Right..... 58
12” Left & Right..... 59
770 Model Left & Right..... 60
Across-the-Bed..... 61
Decals.....62-63
Rear View Camera Mounting Kits..... 64
Bed Mounting Kits..... 65
Accessories: 4’ Bale Adapter, Receiver Hitch, Lift Bar... 66
Appendices
I GatorHyde Repair..... 67
II Remote Control.....68-69
III Standard E/H Install.....70-71
IV HD E/H Install..... 72-73
V XRM Adapter Update..... 74

DUMMY ARMS

BED MODELS	STANDARD	BEEFCAKE 1000		BEEFCAKE 1500		BEEFCAKE 2000	
	Drv & Pass	Drv Front	Drv Rear	Drv Front	Drv Rear	Drv Front	Drv Rear
670	215189	NA	NA	NA	NA	NA	NA
671	215384	NA	NA	NA	NA	NA	NA
675	215150	215353	215354	NA	NA	NA	NA
676	215249	215353	215356	215355	215354	NA	NA
677	215191	215353	215357	215355	215356	NA	NA
679	215208	215353	215358	215355	215357	215355	215356
682	215145	215359	215357	215360	215356	NA	NA
684	215193	215359	215358	215360	215357	215360	215356
687	215198	NA	NA	215360	215361	215360	215361
688	215200	NA	NA	215360	215362	215360	215362
770	215210	NA	NA	NA	NA	NA	NA
778	215160	215363	215364	NA	NA	NA	NA
776	215257	215363	215365	215367	215366	NA	NA
782	215158	215363	215368	215367	215369	NA	NA
784	215202	215363	215370	215367	215371	215367	215372
787	215204	NA	NA	215367	215373	215367	215373
788	215206	NA	NA	215367	215374	215367	215374

600/700 BED PARTS

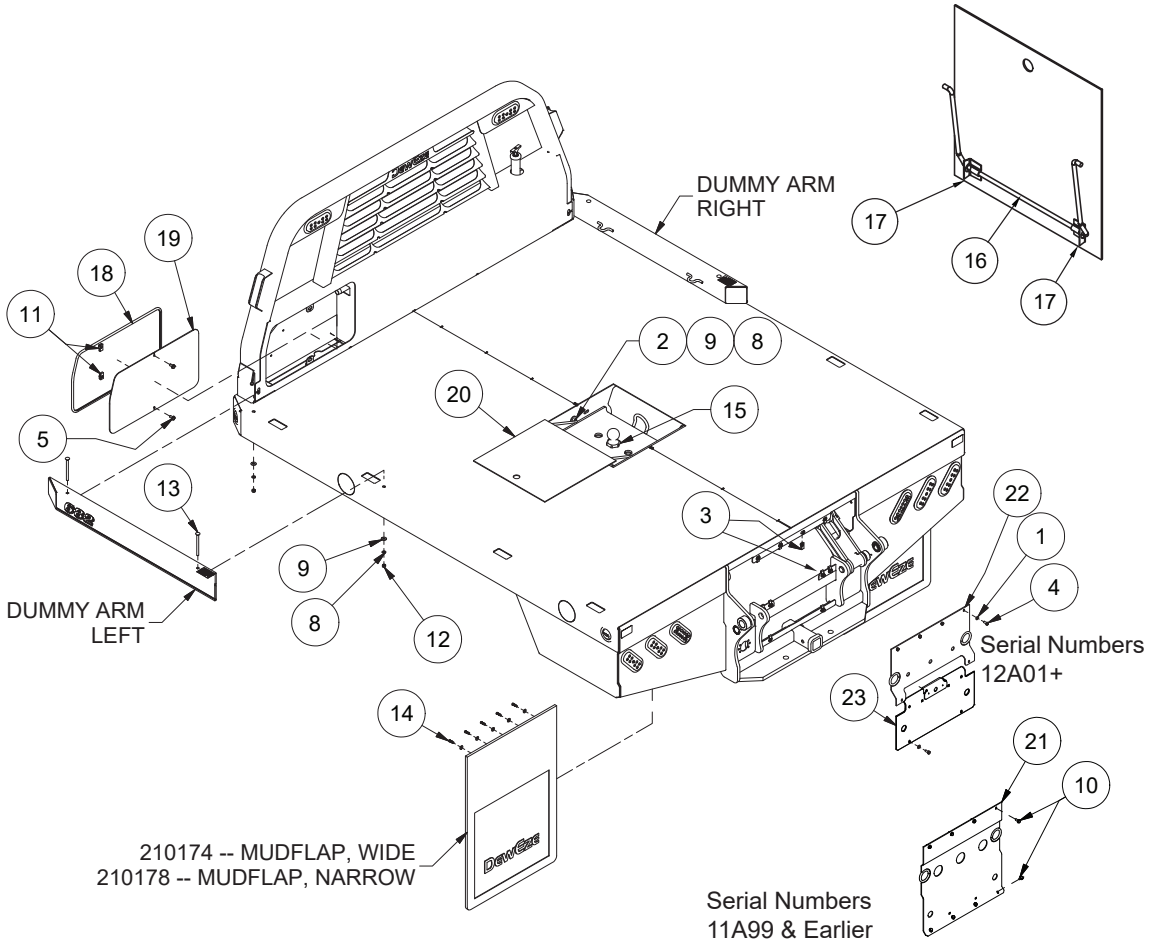

Parts List				Parts List			
ITEM	QTY	Part #	DESCRIPTION	ITEM	QTY	PART #	DESCRIPTION
1	10	110069	Washer, 5/16" Flat Sae	13	4	110846	Bolt, 3/8-16 X 5 In Carriage
2	2	110244	Bolt, 1/2-13 X 1.5 Shcs	14	1	205043	Install Hardware, Mudflap
3	10	110319	Nut, 5/16-18 U-Type .75l	15	1	210459	Hitch Ball And Nut
4	10	110423	Bolt, 5/16-18 X 1	16	1	210892	Hinge Rod, Lid Recessed Well
5	2	110440	Bolt, 3/8-16 X 1, Wiz Flange	17	2	210920	Hinge Clip
6	10	110423	Bolt, 5/16-18 X 1	18	1	211202	Valve Cover
7	2	110440	Bolt, 3/8-16 X 1, Wiz Flange	19	1	211481	Edge Trim, Valve Cover
8	4	110672	Washer, 3/8" Lock	20	1	215128	Ball Well Door Weldment
9	4	110676	Washer, 3/8" Flat Standard	21	1	215139	Center Tailboard Door Weldment
10	8	110794	Bolt, 5/16-18 X 0.75, Gr8 Blk Hex Flange	22	1	215230	Center Tailboard Door Weldment, Upper
11	2	110804	Nut, 3/8-16 U-Type .75l	23	1	215400	Center Tailboard, Lower, Arm Bed
12	4	110826	Nut, 3/8-16 Gr 5				

CROSSTUBE & ARMS: PARALLEL

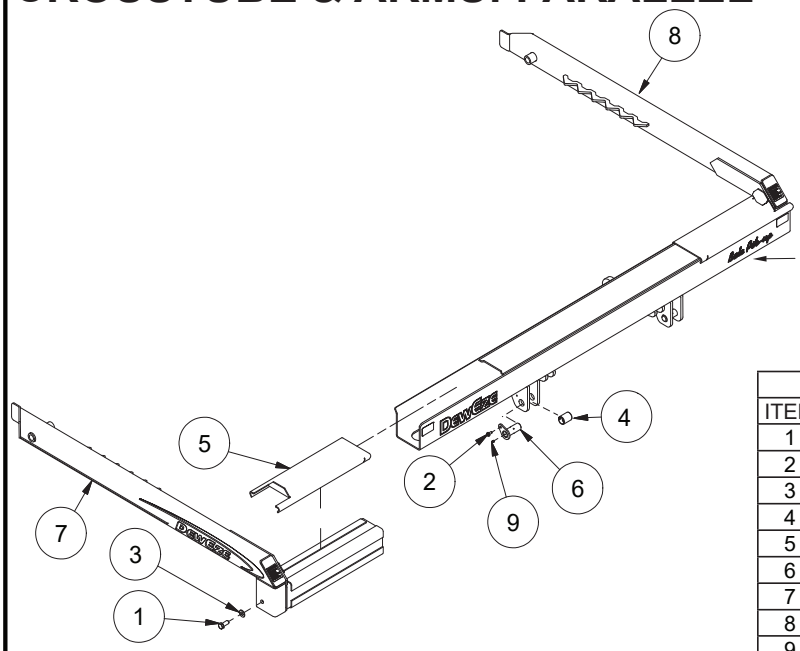

PARALLEL CROSSTUBES		
Bed Width	PART #	Models
85.375”	212072	670, 671, 675, 676, 677, & 679
93.0”	212071	682, 684, 687, & 688
96.5”	212073	770,778,776,782,784,787,&788

Parts List			
ITEM	QTY	PART #	DESCRIPTION
1	2	110365	Bolt, 5/8-18 X 1.5 Gr 5
2	11	110444	Bolt, 5/16-18 X 0.75, Wiz Flange
3	2	110663	Washer, 5/8" Flat Sae
4	2	202023	Bushing, 1.5 X 1.25 X 2.0 Split Cg/Id
5	2	211292	Shield, Crossarm
6	2	215140	Pin Weldment, 1-1/4 X 3
7	1	215167	Squeeze Arm Left
8	1	215168	Squeeze Arm Right
9	8	510174	Grease Zerk, 1/4-28 St

CROSSTUBE & ARMS: XRM PARALLEL

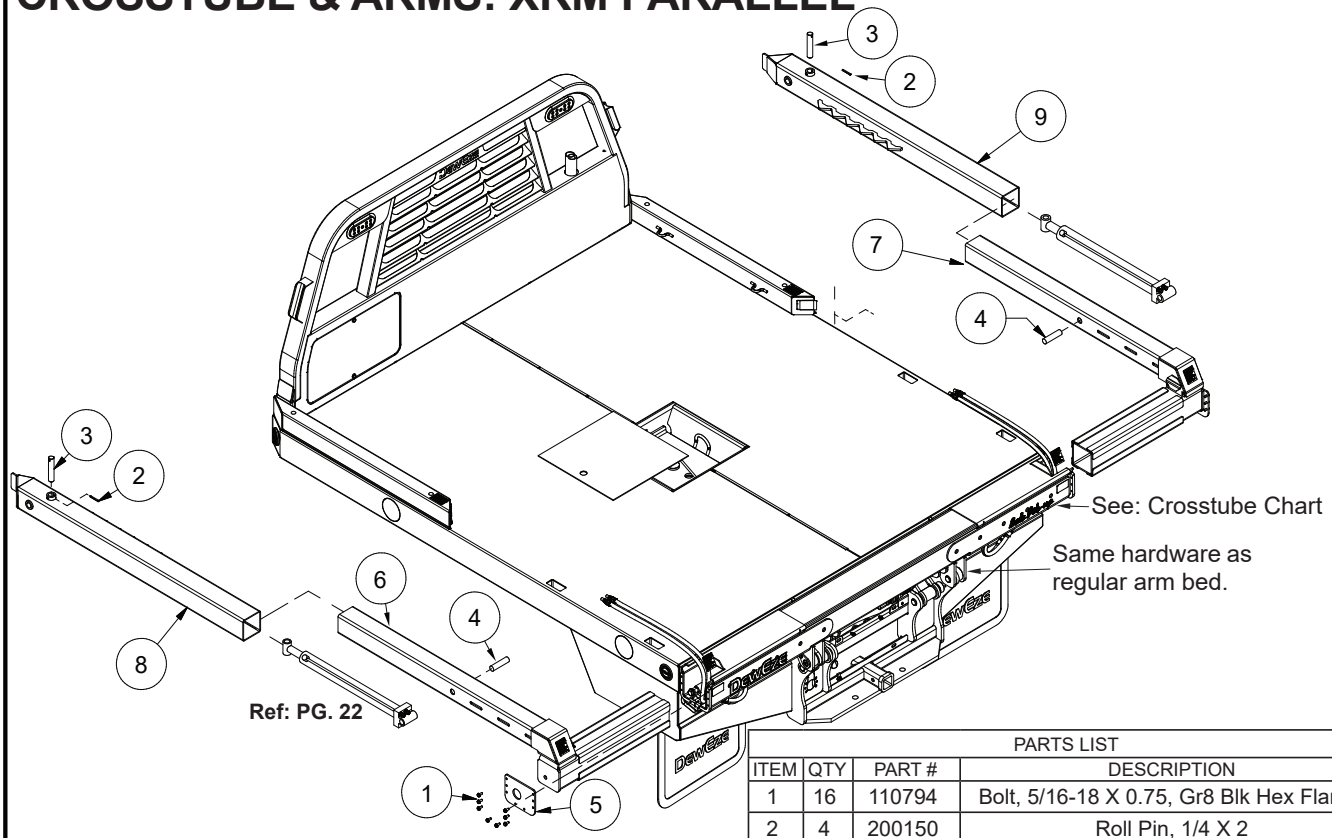

XRM PARALLEL CROSSTUBES		
Bed Width	PART #	Models
85.375”	212050	670, 671, 675, 676, 677, & 679
93.0”	212051	682, 684, 687, & 688
96.5”	212049	770,778,776,782,784,787,&788

PARTS LIST			
ITEM	QTY	PART #	DESCRIPTION
1	16	110794	Bolt, 5/16-18 X 0.75, Gr8 Blk Hex Flange
2	4	200150	Roll Pin, 1/4 X 2
3	2	210941	Cylinder Pin
4	2	210942	Floating Pin
5	2	211755	Crosstube Endcap
6	1	215085	Left, Squeeze Arm Xrm
7	1	215086	Right, Squeeze Arm Xrm
8	1	215173	Left, Ext Arm
9	1	215174	Right, Ext Arm

CROSSTUBE & ARMS: PIVOT

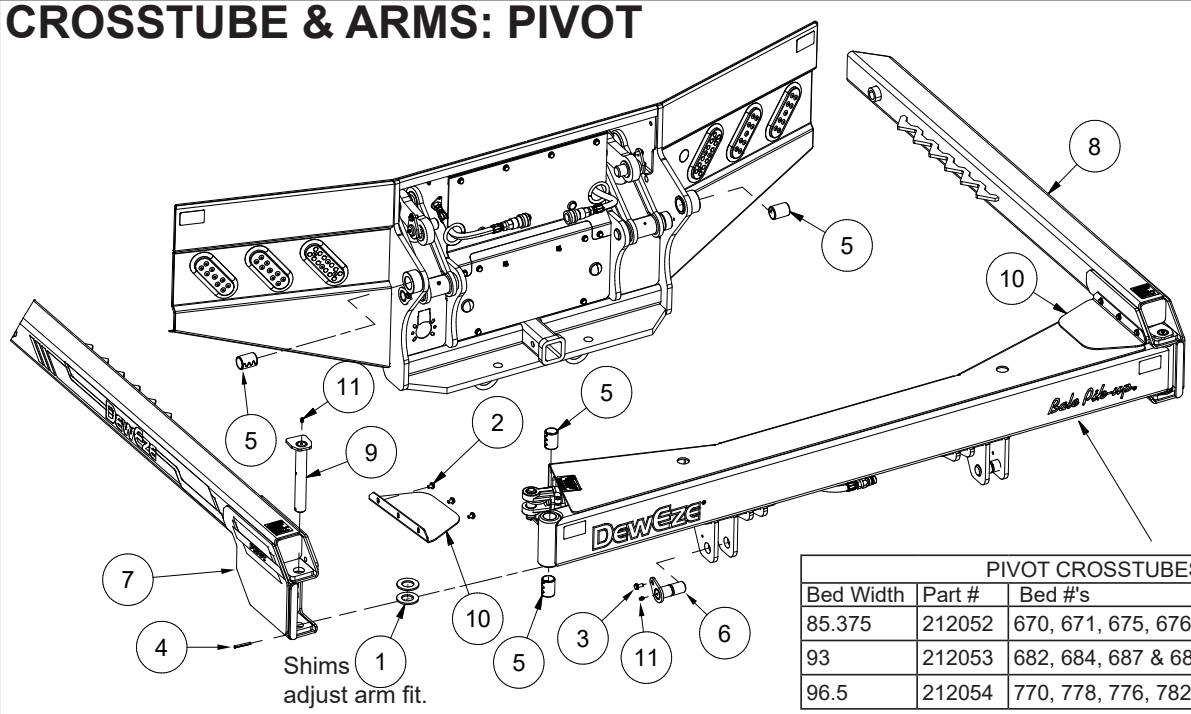

PIVOT CROSSTUBES		
Bed Width	Part #	Bed #'s
85.375	212052	670, 671, 675, 676, 677 & 679
93	212053	682, 684, 687 & 688
96.5	212054	770, 778, 776, 782, 784 & 788

Parts List				Parts List			
ITEM	QTY	PART #	DESCRIPTION	ITEM	QTY	PART #	DESCRIPTION
1	4	110041	Washer, 1-1/4" Flat Sae	7	1	215237	Weldment, Pivot Squeeze Arm Left
2	6	110426	Bolt, 5/16-18 X 0.5, Wiz Flange	8	1	215238	Weldment, Pivot Squeeze Arm Right
3	2	110444	Bolt, 5/16-18 X 0.75, Wiz Flange	9	2	215239	Weldment, Pivot Pin
4	2	200150	Roll Pin, 1/4 X 2	10	2	260384	Shield, Pivot Arm
5	6	202023	Bushing, 1.5 X 1.25 X 2.0 Split Cg/Id	11	4	510174	Grease Zerk, 1/4-28 St
6	2	215140	Pin Weldment, 1-1/4 X 3				

CROSSTUBE & ARMS: XRM PIVOT

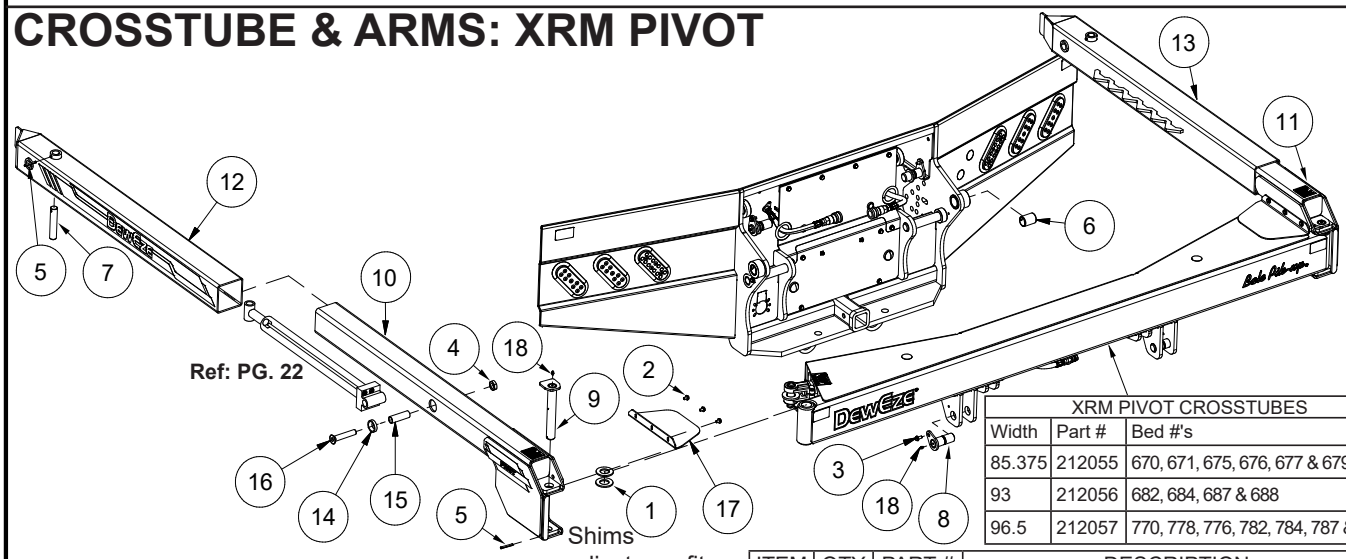

XRM PIVOT CROSSTUBES		
Width	Part #	Bed #'s
85.375	212055	670, 671, 675, 676, 677 & 679
93	212056	682, 684, 687 & 688
96.5	212057	770, 778, 776, 782, 784, 787 & 788

Parts List			
ITEM	QTY	PART #	DESCRIPTION
1	4	110041	Washer, 1-1/4" Flat Sae
2	6	110426	Bolt, 5/16-18 X 0.5, Wiz Flange
3	2	110444	Bolt, 5/16-18 X 0.75, Wiz Flange
4	2	111036	Heavy Jamhexnut 3_4-10 Unc
5	4	200150	Roll Pin, 1/4 X 2
6	2	202023	Bushing, 1.5 X 1.25 X 2.0 Split Cg/Id
7	2	210941	Cylinder Pin
8	2	215140	Pin Weldment, 1-1/4 X 3

ITEM	QTY	PART #	DESCRIPTION
9	2	215239	Weldment, Pivot Pin
10	1	215251	Squeeze Arm Xrm, Left Pivot, Svc Prt
11	1	215252	Squeeze Arm Xrm, Right Pivot, Svc Prt
12	1	215253	Ext Squeeze Arm, Left, Pivot, Svc Part
13	1	215254	Ext Squeeze Arm, Right, Pivot, Svc Part
14	2	260348	Spacer, 1.75 X .375, 82° C'sink
15	2	260349	Bushing, 1.0 X .78 X 3.125
16	2	260350	Bolt, 3/4-10 X 4.05 Fh Schs
17	2	260384	Shield, Pivot Arm
18	4	510174	Grease Zerk, 1/4-28 St

LIFT CYLINDER & LINKAGE

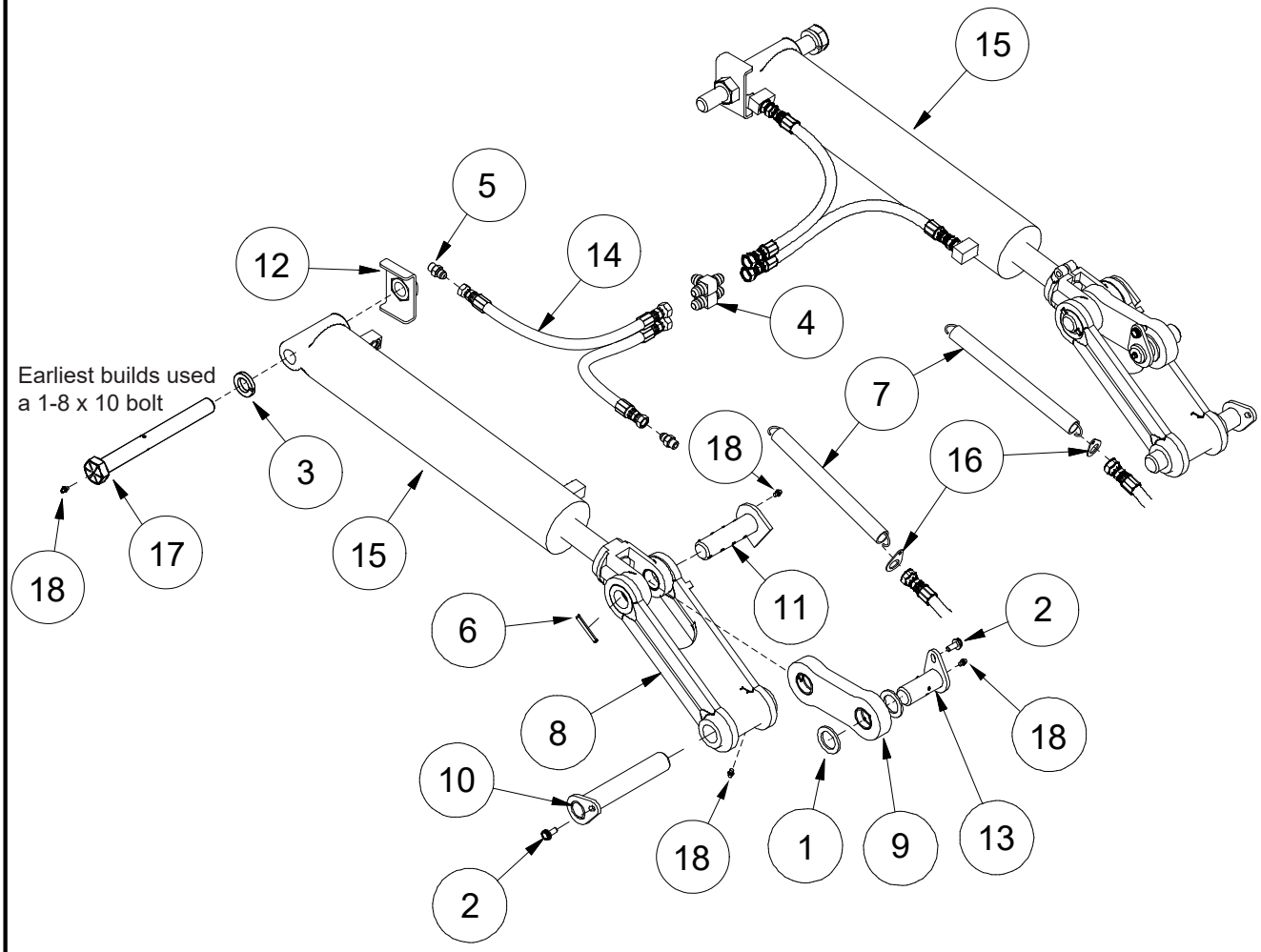

PARTS LIST			
ITEM	QTY	PART #	DESCRIPTION
1	4	110336	Washer, 1-1/4" Flat Machine
2	10	110444	Bolt, 5/16-18 X 0.75, Wiz Flange
3	2	110649	Washer, 1" Lock
4	2	120242	Adapter, 8mj-8mj-8mj
5	4	120319	Adapter, 6mj-6mb
6	2	200150	Roll Pin, 1/4 X 2
7	2	202022	Spring, 1" O.d. X 12" L X .105 Wire
8	2	210935	Idler Arm, Machine Dwg.
9	2	214002	Push Arm Assy, Dual Lift
10	2	215141	Pin, 1-1/4 X 7
11	2	215142	Pin, 1-1/4 X 4
12	2	215144	Keeper, 1 In Nut, Weldment
13	2	215148	Pin, 1-1/4 X 3.5 Crosstube Link
14	4	220681	Hose Assy, Flatbed Dual Lift
15	2	***222129**	Lift Cylinder 3.50 X 16.6
16	2	260111	Mount, Hose Spring
17	2	260760	Bolt, 1-8 X 10, Greasable
18	10	510174	Grease Zerk, 1/4-28 St

* Current Replacement LIFT Cylinder: 222129
Seal Kit Part: 220835

* Anniversary LIFT Cylinder: 223030
Seal Kit Part: 212012

* OBS Original LIFT Cylinder: 223038
Seal Kit Part: 212012

PARALLEL SQUEEZE CYLINDERS

OLD (Center Port) SQUEEZE: SHORT, MEDIUM, LONG

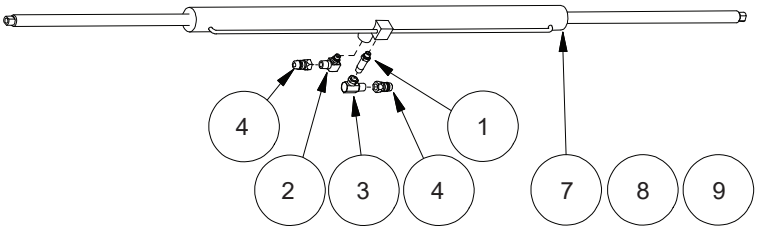

OLD Center Port style

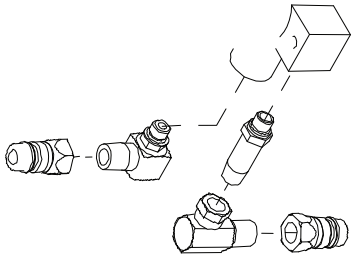

OLD (Center Port) SSQ

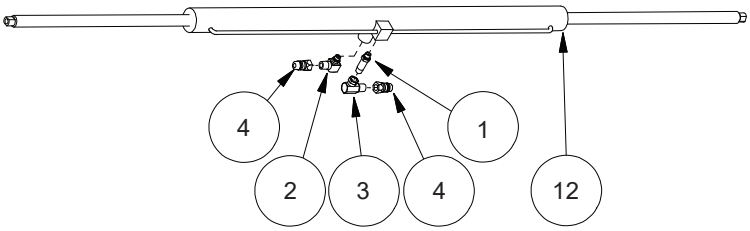

NEW (Side Port) SQUEEZE: SHORT or LONG

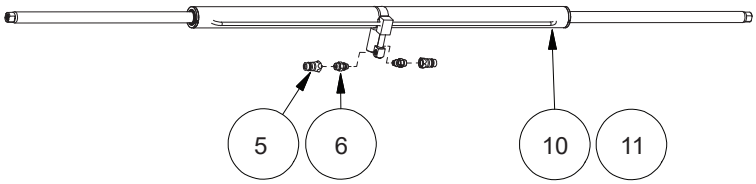

NOTE: New SIDE PORT cylinders are available for short, long and SSQ configurations. They use fewer fittings, are less hassle, and decrease the possiblity of leakage.

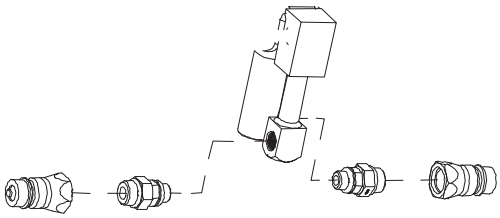

NEW (Side Port) SSQ

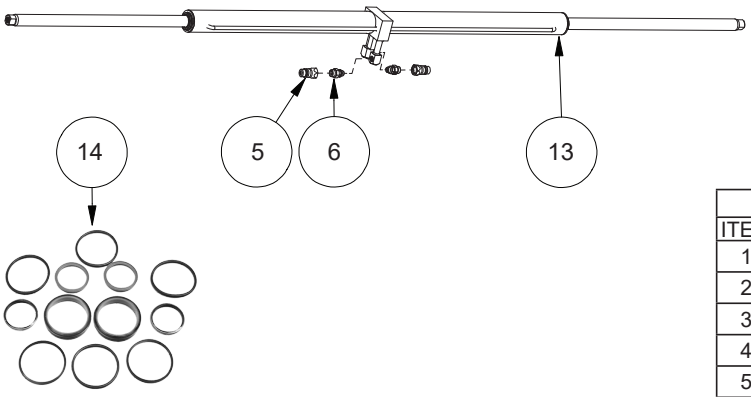

Cylinder Size Chart			
Bed Width	Style	Cyl Size	Models
85.375”	STD	2x34”	670, 671, 675, 676, 677, & 679
85.375”	XRM	2x39.25”	670, 671, 675, 676, 677, & 679
93.0”	STD or XRM	2x35.75”	682, 684, 687, & 688
96.5”	STD or XRM	2x39.25”	770,778,776,782,784,787,& 788

PARTS LIST			
ITEM	QTY	PART #	DESCRIPTION
1	1	120078	Adapter, 6mb-6mp (3/8 X 2-1/2)
2	1	120147	Adapter, 6mb-8mp90
3	1	120311	Adapter, 8mp-6fpx90
4	2	420005	Coupler, Pioneer Male
5	2	120582	Coupler, Pioneer Male, ORB
6	2	120756	Adapter, 8mb-6mb Adjustable
7	1	220002	OLD (Short) Cylinder, 2 x 34 Center Port
8	1	223032	OLD (Med) Cylinder, 2 x 35.75 Center Port
9	1	223001	OLD (Long) Cylinder, 2 x 39.25 Center Port
10	1	223119	NEW (Short) Cylinder, 2 x 34 Side Port
11	1	223121	NEW (Long) Cylinder, 2 x 39.25 Side Port
12	1	223026	OLD (SSQ) Cylinder, 2 x 39.25 Center Port
13	1	223110	NEW (SSQ) Cylinder, 2 x 39.25 Side Port
14	KIT	220056	Seal Kit, Squeeze Cylinders

PIVOT SQUEEZE CYLINDER 3.25 (DRV SIDE)

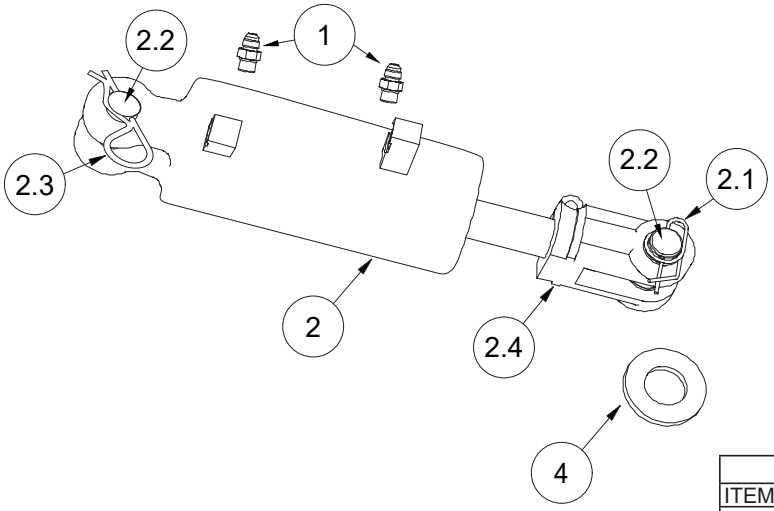

PARTS LIST			
ITEM	QTY	PART #	DESCRIPTION
1	4	120319	Adapter, 6mj-6mb
2	1	223043	Pivot Cylinder, 3.25 x 5.0
2.1	2	102122	Locking Cotter Ring, 1"
2.2	2	202059	Pin, Clevis
2.3	1	202060	Clip, Hairpin
2.4	1	212018	Clevis End 1.25
4		212025	Seal Kit
5	2	260302	Shim Washer

PIVOT SQUEEZE CYLINDER 3.0 (PSS SIDE)

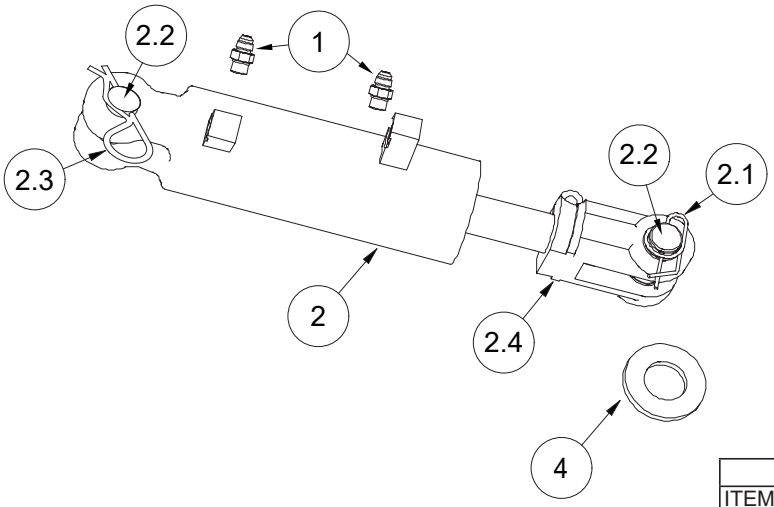

PARTS LIST			
ITEM	QTY	PART #	DESCRIPTION
1	4	120319	Adapter, 6mj-6mb
2	1	223042	Pivot Cylinder, 3.0 X 5.0
2.1	2	102122	Locking Cotter Ring, 1"
2.2	2	202059	Pin, Clevis
2.3	1	202060	Clip, Hairpin
2.4	1	212018	Clevis End 1.25
4		212021	Seal Kit
5	2	260302	Shim Washer

XRM EXTEND CYLINDER 2.0 (DRV SIDE)

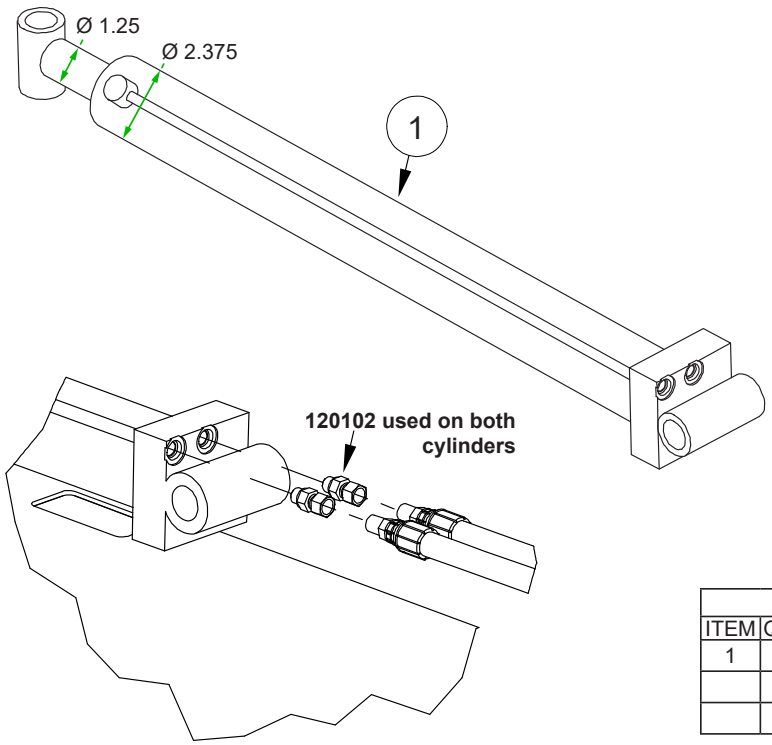

PARTS LIST			
ITEM	QTY	PART #	DESCRIPTION
1	1	220456	Extension Cylinder 2.0
	1	220533	Seal Kit for 2.0
	2	120102	Adapter, Bulkhead, 6mj-6mj

XRM EXTEND CYLINDER 2.5 (PSS SIDE)

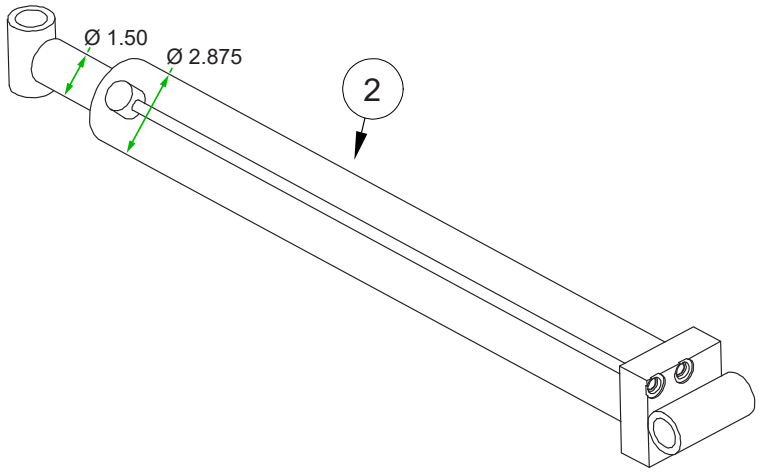

PARTS LIST			
ITEM	QTY	PART #	DESCRIPTION
2	1	220455	Extension Cylinder 2.5
	1	220532	Seal Kit for 2.5
	2	120102	Adapter, Bulkhead, 6mj-6mj

SPINNERS & RISERS

Spinner Assy 16" Pair, Part# 210008			
ITEM	QTY	PART #	DESCRIPTION
1	2	210006	Pin, Lynch 1/4 x 1 1/2
2	2	210007	WELDMENT, SPINNER 16"
3	2	211513	LYNCH PIN GUARD

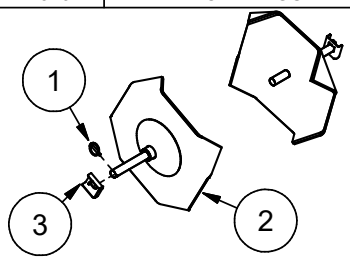

Spinner Assy 16" Pair, XRM, Part #215007			
ITEM	QTY	PART #	DESCRIPTION
1	2	210006	Pin, Lynch 1/4 x 1 1/2
2	2	211509	WELDMENT, SPINNER 16" XRM
3	2	211513	LYNCH PIN GUARD

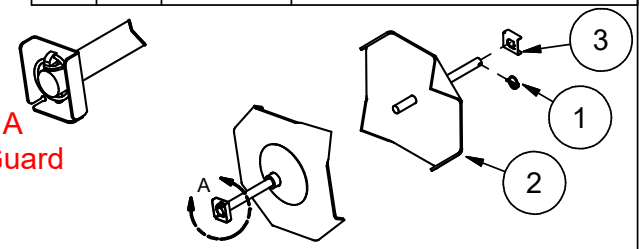

Spinner Assy 12" Pair, Part# 215081			
ITEM	QTY	PART #	DESCRIPTION
1	2	210006	Pin, Lynch 1/4 x 1 1/2
2	2	211513	LYNCH PIN GUARD
3	2	215080	WELDMENT, SPINNER 12"

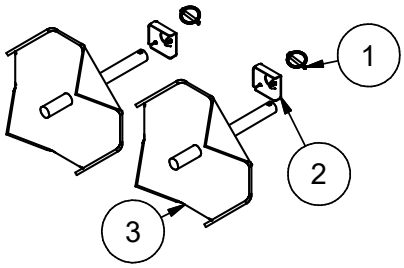

Spinner Assy 12" Pair, XRM, Part# 215234			
ITEM	QTY	PART #	DESCRIPTION
1	2	210006	Pin, Lynch 1/4 x 1 1/2
2	2	211513	LYNCH PIN GUARD
3	2	215233	WELDMENT, SPINNER 12" XRM

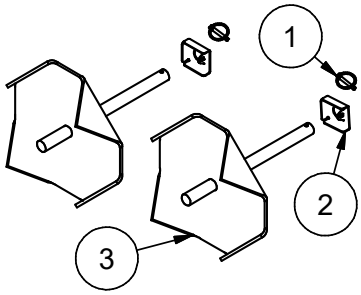

Spinner Assy, 12” Swivel Pair Part# 205077			
ITEM	QTY	PART #	DESCRIPTION
1	2	210006	Pin, Lynch 1/4 x 1 1/2
2	2	211513	LYNCH PIN GUARD
3	2	215247	Weldment, Spinner, Swivel (1” Ø shaft)

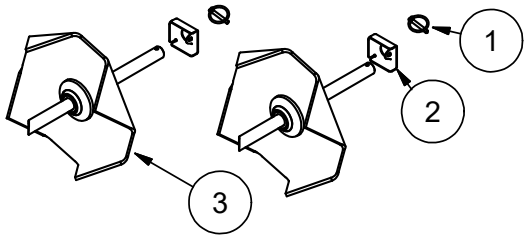

Spinner Extension Pair, Part # 205076			
ITEM	QTY	PART #	DESCRIPTION
1	2	110658	Washer, 1/2 Flat
2	2	210006	Pin, Lynch 1/4 x 1 1/2
3	2	215235	Spinner Extension Pin

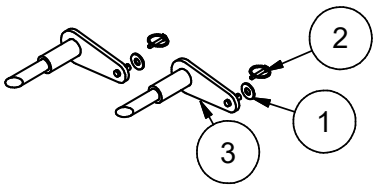

Riser, Offset Pair, Part# 211145			
ITEM	QTY	PART #	DESCRIPTION
1	2	110364	BOLT, 1-8 X 7.0
2	2	110601	NUT, 1-8
3	2	211125	RISER (no hardware)
4	2	510174	GREASE ZERK, 1/4-28 ST

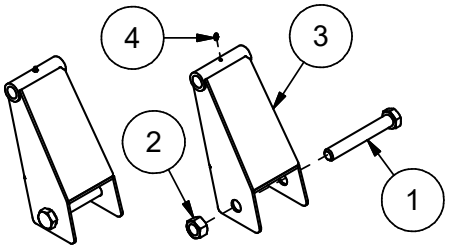

Risers XRM (sold individually)			
ITEM	QTY	PART #	DESCRIPTION
1	1	205349	LEFT RISER (with hardware)
2	1	205350	RIGHT RISER (with hardware)
3	2	110364	BOLT, 1-8 X 7.0
4	2	110601	NUT, 1-8
5	2	510174	GREASE ZERK, 1/4-28 ST

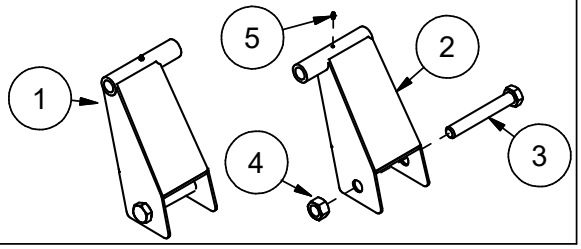

REV:

SPADE VALVE (GEN II)

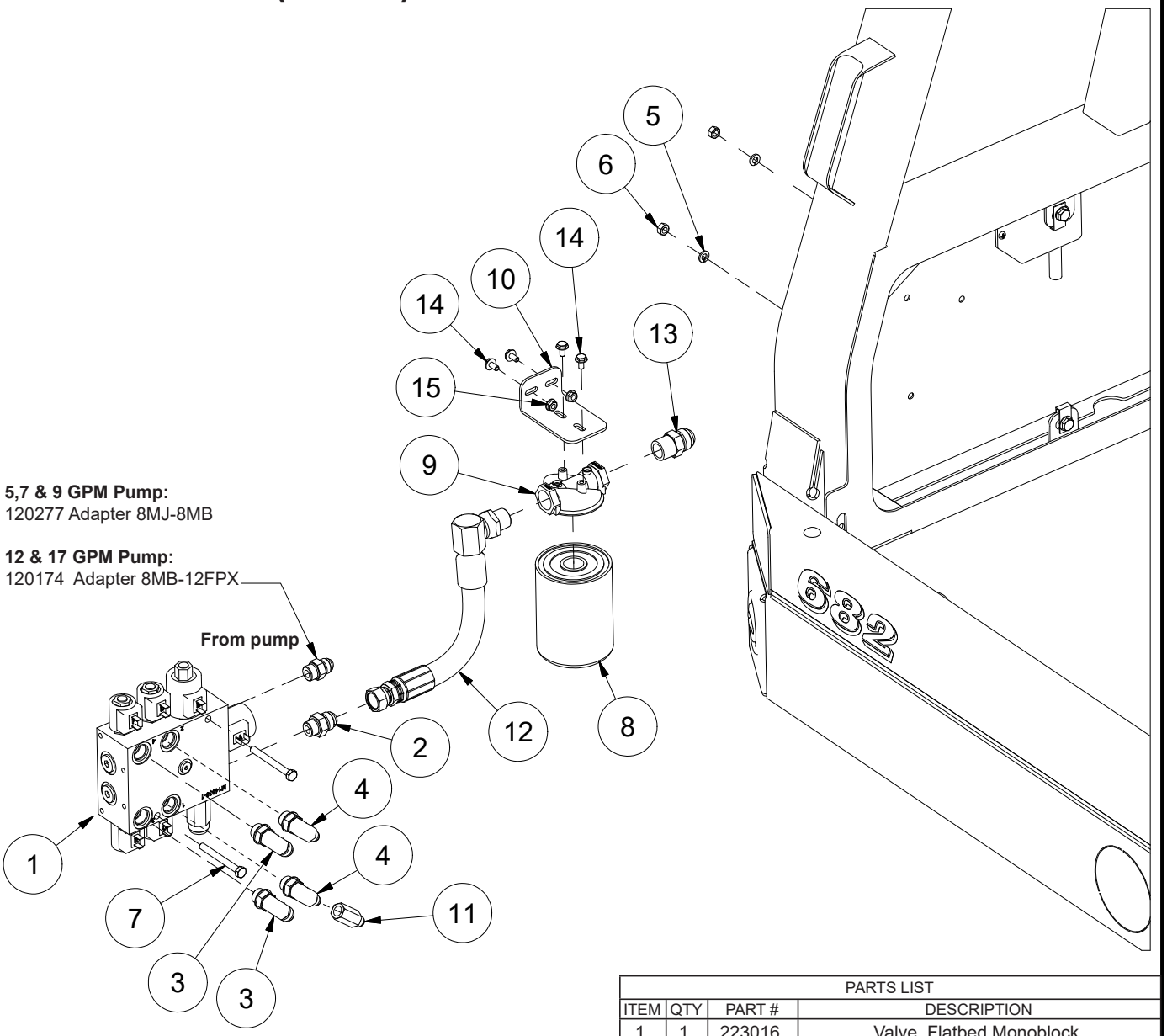

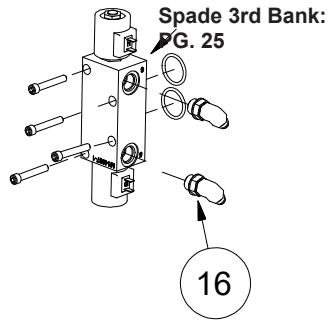

PARTS LIST			
ITEM	QTY	PART #	DESCRIPTION
1	1	223016	Valve, Flatbed Monoblock
2	1	120493	Adapter, 10mj-8mb
3	2	120288	Adapter, 8mj-8mb90
4	2	120134	Adapter, 6mj-8mb90
5	2	110674	Washer, 5/16" Lock
6	2	110608	Nut, 5/16-18
7	2	110538	Bolt, 5/16-18 X 3.0
8	1	720043	Filter, 10 Micron
9	1	720041	Filter Head
10	1	260265	Mounting Bracket, Filter
11	1	222039	Valve, Check With .075 Orifice
12	1	220691	Hose, .75 X 12.25 12-10FJX / 12-12MPX90
13	1	120244	Adapter, 12mj-12mp
14	4	110434	Bolt, 1/4-20 X 0.5, Wiz Flange
15	2	110290	Nut, 1/4-20 Wiz Flange
16	2	120134	Adapter, 6MJ-8MB90

SPADE VALVE (GEN II)

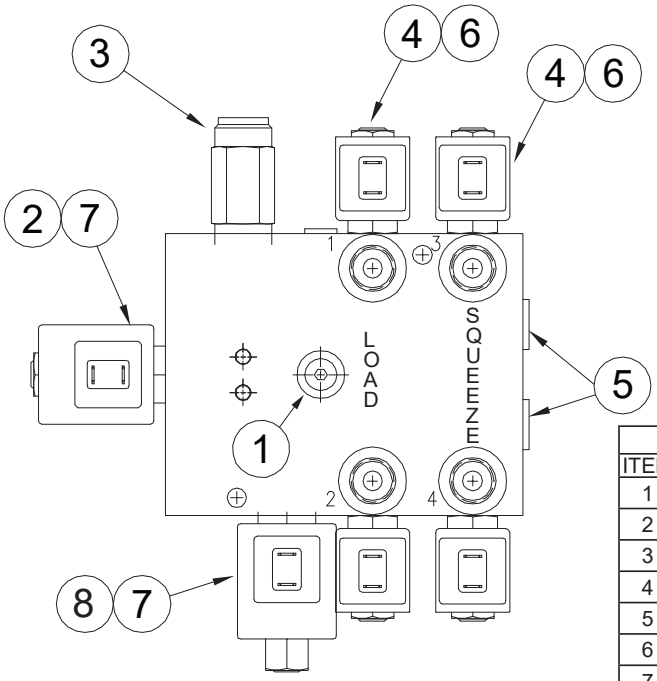

PARTS LIST			Spade Valve: 223016
ITEM	QTY	PART #	DESCRIPTION
1	2	120062	O-Ring, Adapter #4 7/16-20
2	1	222002	Cartridge, Directional, 4-Way
3	1	222004	Valve, Pressure Relief
4	4	720015	Cartridge, #8 Valve
5	2	720164	O-Ring, Adapter #8 3/4-16
6	4	820143	Coil, #8 Valve, 12 Volt
7	2	820229	Coil, #10 Valve, 12 Volt
8	1	820232	Cartridge, #10 Valve

SPADE VALVE 3RD BANK

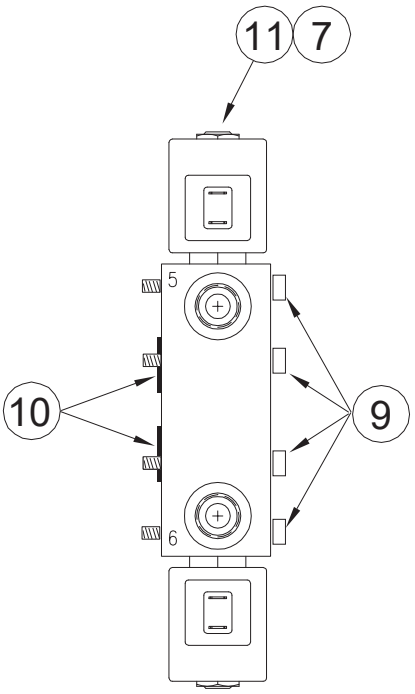

PARTS LIST			Spade 3rd Bank: 223017
ITEM	QTY	PART #	DESCRIPTION
9	4	110168	12 Bolt, 5/16-18 X 2 Shcs
10	2	120376	11 O-Ring, -219, 90 Duro
11	2	222003	Cartridge, Dbl Poppet NC
7	2	820229	10 Coil, #10 Valve, 12 Volt

DEUTSCH VALVE (GEN III)

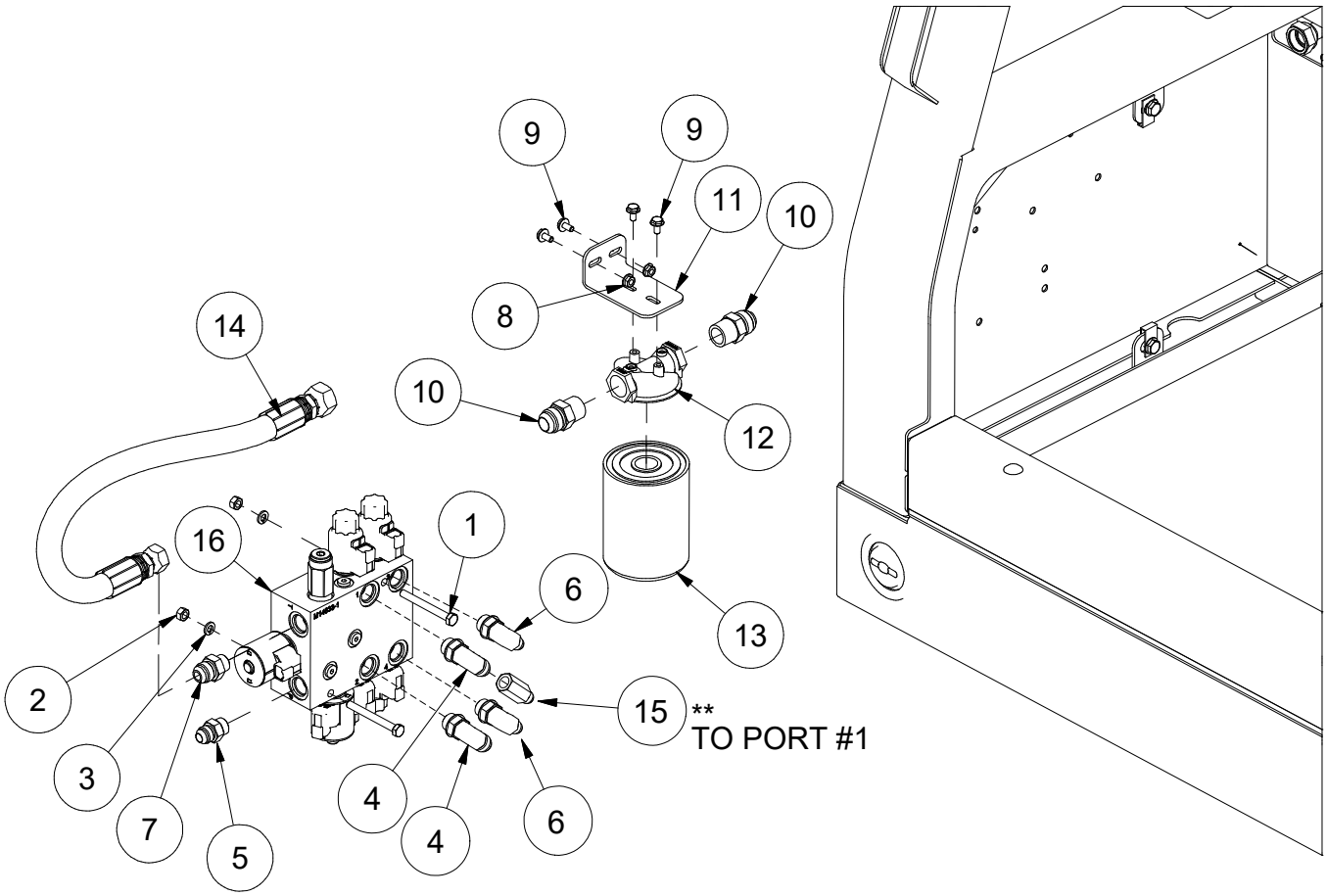

* **12 & 17 GPM Pump:**
120174 Adapter 8MB-12FPX

Spade 3rd Bank:
PG. 26

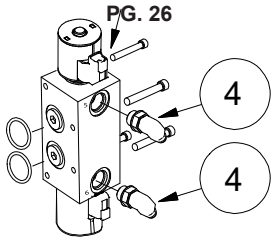

PARTS LIST			
ITEM	QTY	PART #	DESCRIPTION
1	2	110538	Bolt, 5/16-18 X 3.0
2	2	110608	Nut, 5/16-18
3	2	110674	Washer, 5/16" Lock
4	4	120134	Adapter, 6mj-8mb90
5	1	120277	Adapter, 8mj-8mb
6	2	120288	Adapter, 8mj-8mb90
7	1	120493	Adapter, 10mj-8mb
8	2	110290	Nut, 1/4-20 Wiz Flange
9	4	110434	Bolt, 1/4-20 X 0.5, Wiz Flange
10	2	120244	Adapter, 12mj-12mp
11	1	260265	Mounting Bracket, Filter
12	1	720041	Filter Head
13	1	720043	Filter, 10 Micron
14	1	220723	Hose, .75 x 25.0 12-10fjx/12-12fjx
15	1	222039	Valve, Check With .075 Orifice
16	1	223044	Flatbed Valve, Small, Monoblock Ver II

DEUTSCH VALVE (GEN III)

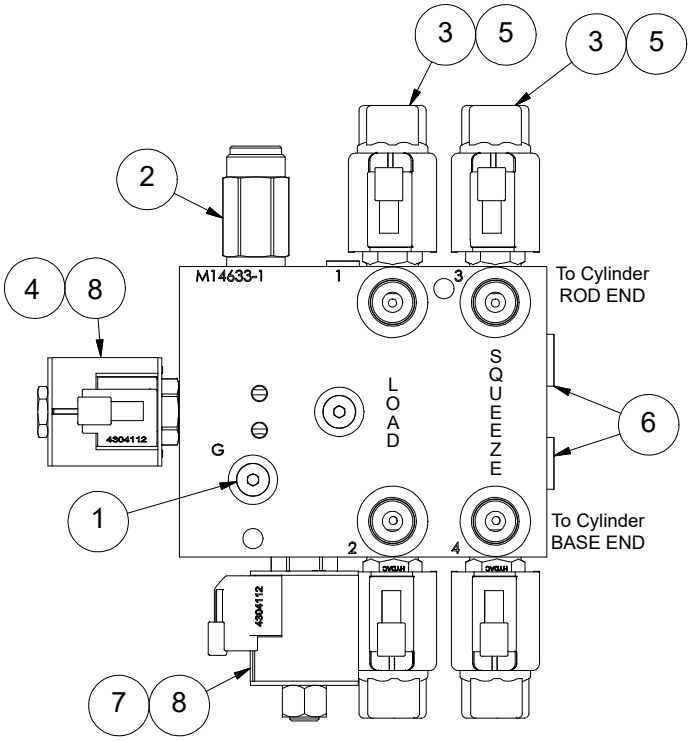

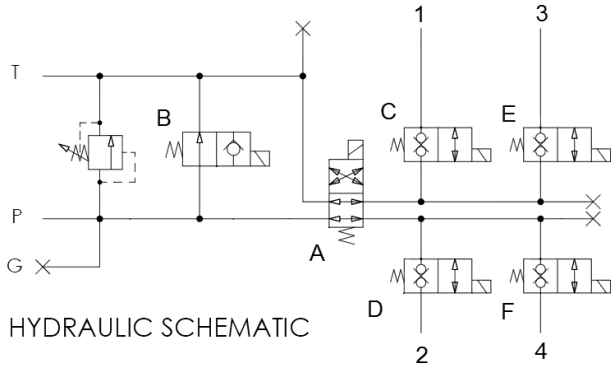

PARTS LIST			**Spade Valve: 223044**
ITEM	QTY	PART #	DESCRIPTION
1	3	120062	O-Ring Plug, #4 7/16-20
2	1	222004	Valve, Pressure Relief
3	4	222010	Cartridge, #8 Hydac Double Poppet
4	1	222045	#10 Solenoid, 2 Position 4 Way
5	4	222059	Coil, #8 Hydac, Dt04-2p Suppressed
6	2	720164	O-Ring Plug, #8 3/4-16
7	1	820232	Spool, #10 Valve
8	2	922119	Coil, #10 Hydraforce, Dt04-2p Suppressed

DEUTSCH VALVE 3RD BANK

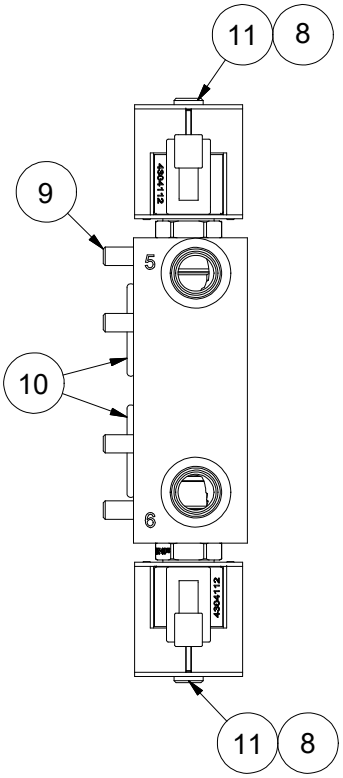

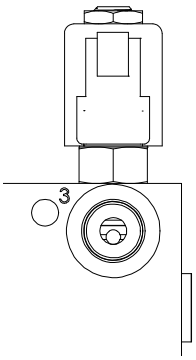

SERVICE NOTE
Eaton coils and cartridges were obsoleted, but may still be out there.

The valve body is the same as current Hydac.

If a single coil or cartridge goes bad, you don't need to replace the whole unit, but individual coil/cartridges need to be replaced at same time.

PARTS LIST			**Spade 3rd Bank: 223045**
ITEM	QTY	PART #	DESCRIPTION
9	4	110168	Bolt, 5/16-18 X 2.0 Shcs
10	2	120376	O'ring, -219, 90 Duro
11	2	222003	Valve, Poppet N.c. Sol Valve
8	2	922119	Coil, #10 Hydraforce, DT04-2p Suppressed

HYDRAULIC RESERVOIR

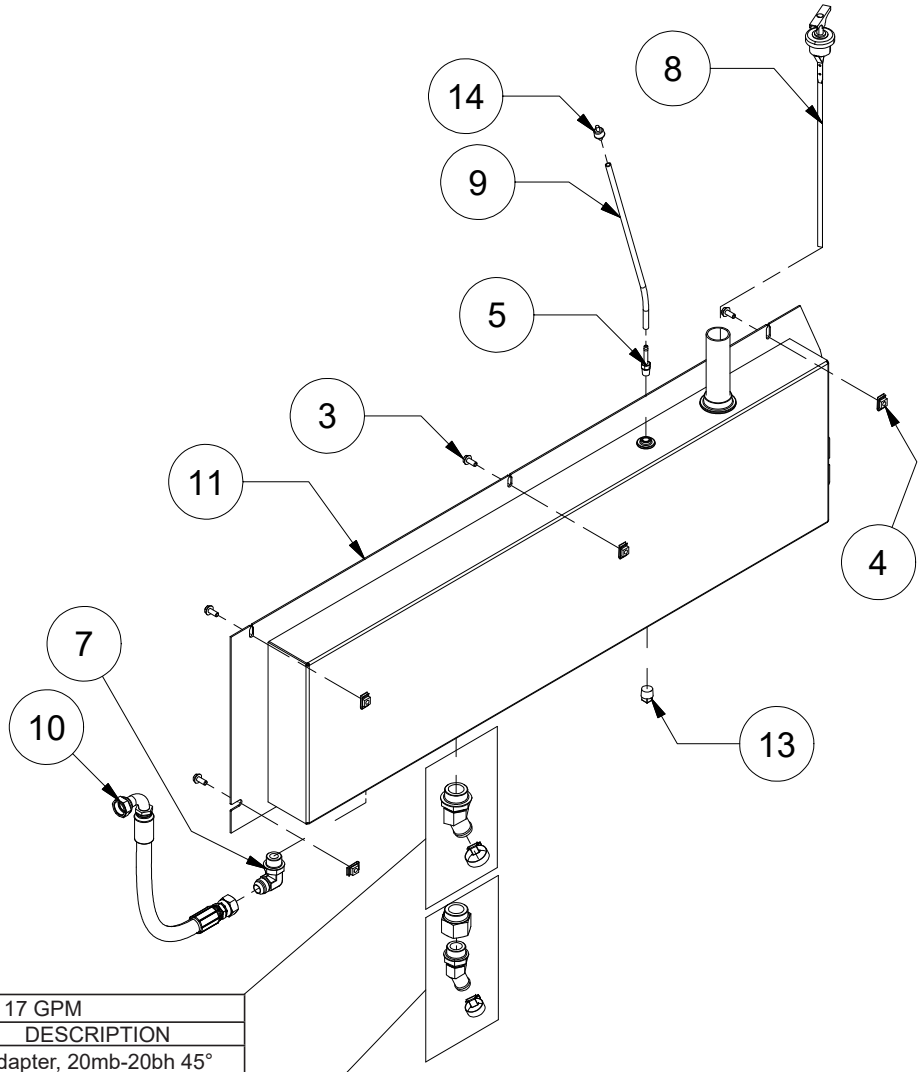

12 & 17 GPM		
PART	QTY	DESCRIPTION
120189	1	Adapter, 20mb-20bh 45°
511002	1	Hose Clamp, #24

7 & 9 GPM		
PART	QTY	DESCRIPTION
120188	1	Adapter, 16mb-16bh 45°
120511	1	Adapter, 20mb-16FOR
720107	1	Hose Clamp, #20

PARTS LIST			
ITEM	QTY	PART #	DESCRIPTION
1	2	110290	Nut, 1/4-20 Wiz Flange
2	4	110434	Bolt, 1/4-20 X 0.5, Wiz Flange
3	4	110444	Bolt, 5/16-18 X 0.75, Wiz Flange
4	4	110616	Nut, 5/16", J-Type, Cage, .5c
5	1	120237	Adapter, 4bh-4mp
6	1	120244	Adapter, 12mj-12mp
7	1	120257	Adapter, 12mj-12mb90
8	1	220566	Dip Stick
9	1	220587	Vent Hose
10	1	220700	Filter To Reservoir Hose
11	1	225012	Reservoir, Flatbed, Remote Filter
12	1	260265	Mounting Bracket, Filter
13	1	500175	Fitting, Plug 1/2" Pipe
14	1	540031	Fuel Filter

Flatbed Non-Proportional Hydraulic Schematic

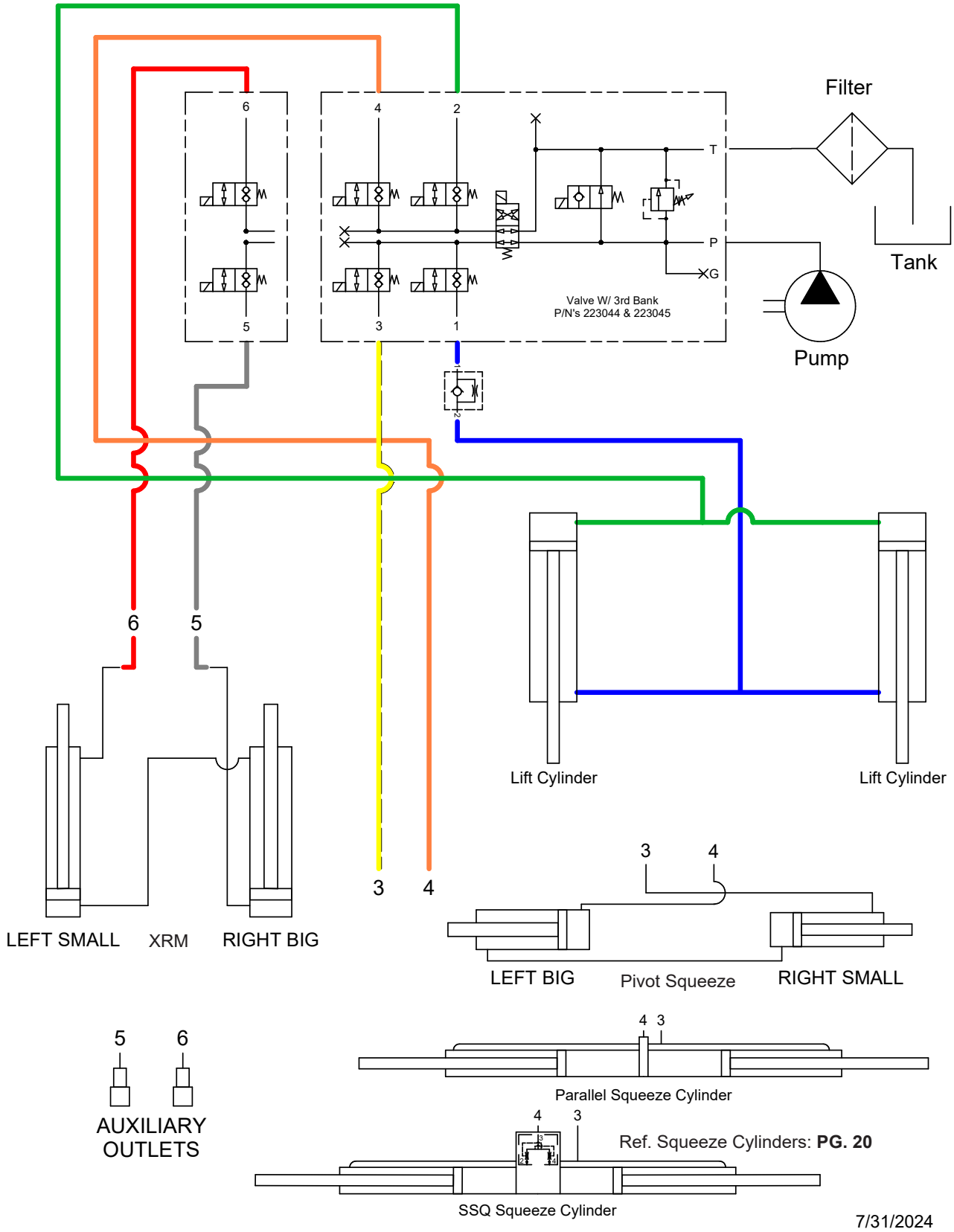

600/700 PARALLEL HOSE ROUTING & PARTS

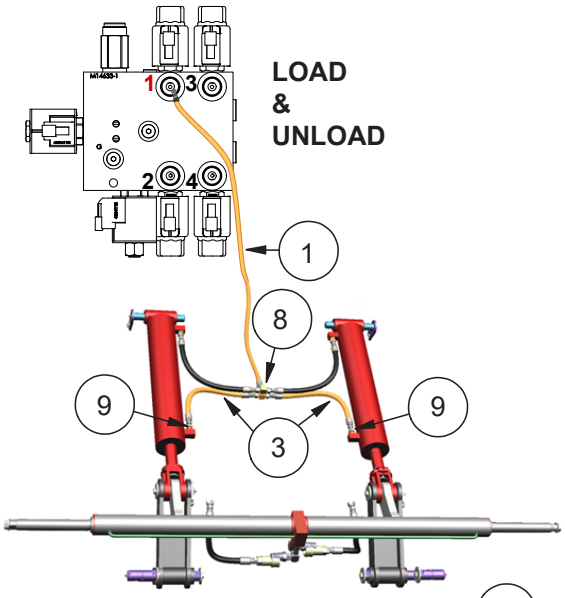

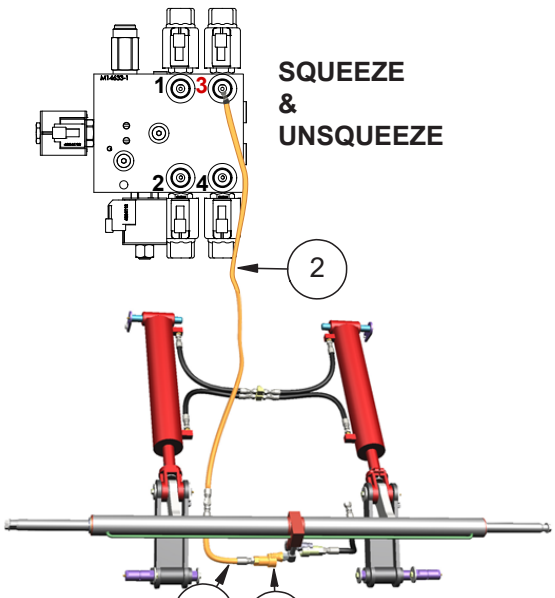

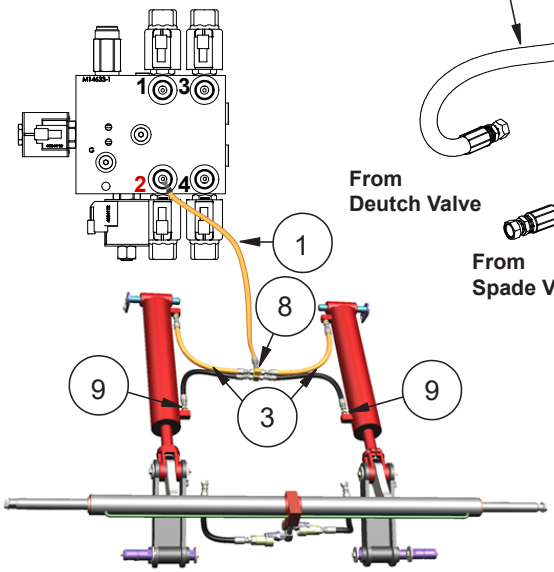

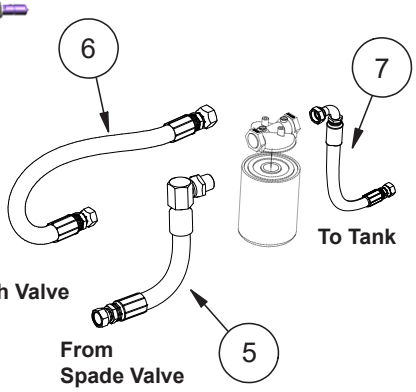

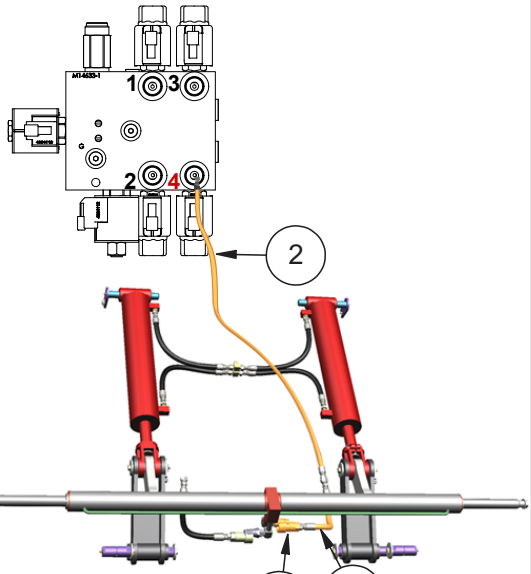

Hoses: Valve to Rear					
ITEM	QTY	HOSE ENDS	BED: 80" (_70)	BEDS: 96" - 110" (_75 - _84)	BED: 132-136" (_87, _88)
1	2	.50 - 6FJX / 8FJX	220687 (76”)	220689 (111”)	220690 (137”)
2	2	.50 - 8FJX / 8MJ	220683 (106”)	220685 (132”)	220686 (158”)
HOSE KIT (Items (1) and (2))			223034	223036	223037

Hoses: At Cylinders			
ITEM	QTY	HOSE ENDS	ALL BEDS
3	4	.375 - 6-6FJX / 6-8FJX	220681 (17”)
4	2	.375 - 6-8FJX / 6-8MP	220682 (17”)

Hoses: Valve to Filter			
ITEM	QTY	HOSE ENDS	ALL BEDS
5	1	12-10FJX / 12-12MPX90	220691 (12.25”)
6	1	12-10FJX / 12-12FJX	220723 (25”)

Hose: Filter to Tank			
ITEM	QTY	HOSE ENDS	ALL BEDS
7	1	.75 12-12FJX/12-12FJX90M	220700 (21”)

FITTINGS			
ITEM	QTY	PART #	DESCRIPTION
8	2	120242	(Adapter 8mj-8mj-8mj)
9	8	120319	(Adapter,6mj-6mb)
10	2	220084	(Coupler, F Pioneer)

CYLINDER HOSE KITS (Do NOT include Items (1) or (2))	
Spade Hoses: 223003	2x(10), 4x(3), 2x(4), 1x(5), 1x(7)
Deutch Hoses: 223051	2x(10), 4x(3), 2x(4), 1x(6), 1x(7)

600/700 PIVOT HOSE ROUTING & PARTS

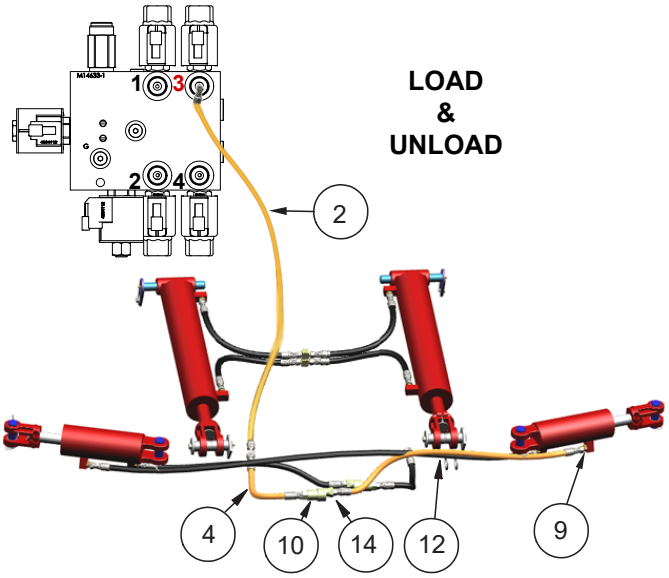

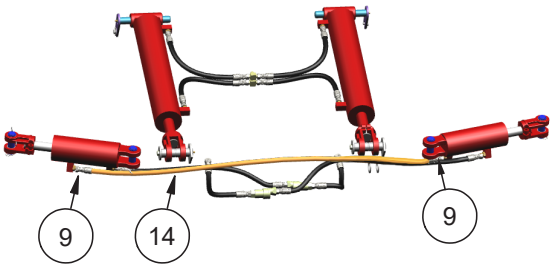

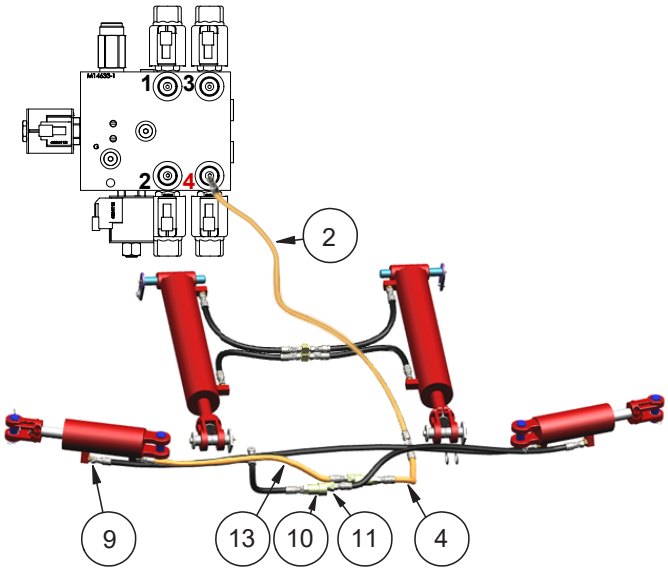

Refer to PG. 30 for common LIFT hoses.

FITTINGS			
ITEM	QTY	PART #	DESCRIPTION
8	2	120242	(Adapter 8mj-8mj-8mj)
9	8	120319	(Adapter,6mj-6mb)
10	2	220084	(Coupler, F Pioneer)
11	2	420005	(Coupler, M Pioneer)

PIVOT SQUEEZE HOSES			
ITEM	**80" (_70)**	**96" - 110" (_75 - _84)**	**BED: 132-136" (_87, _88)**
12	220713 (32in)	220718 (35in)	220715 (37in)
13	220712 (27in)	220717 (30in)	220713 (32in)
14	220711 (56in)	220716 (62.5in)	220714 (66in)
Hose Kit	223048	223049	223050

600/700 XRM PARALLEL HOSE ROUTING & PARTS

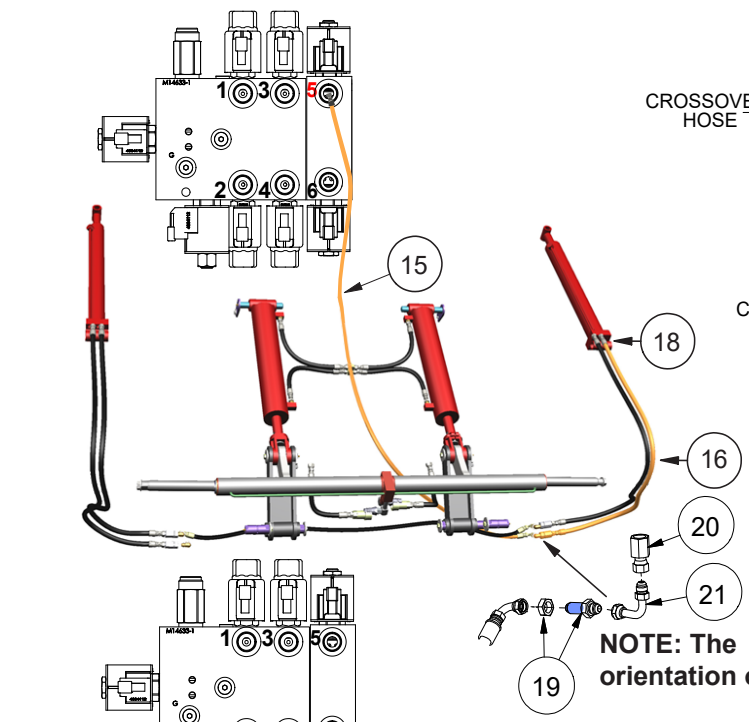

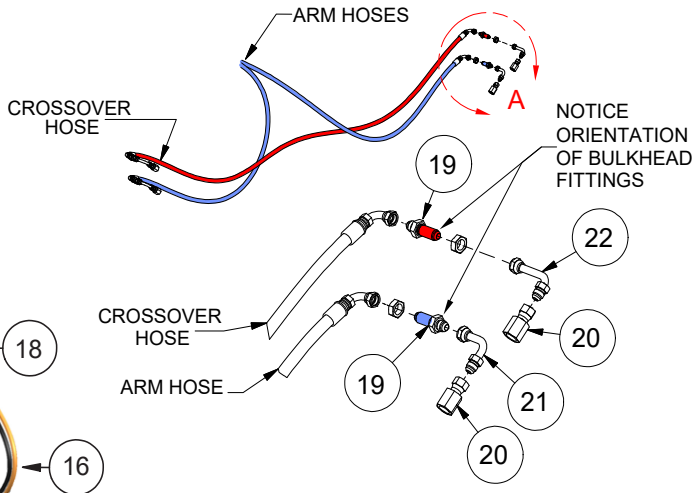

Refer to PG. 30 for common parallel LIFT & SQUEEZE hoses

NOTE: The orientation of (19)

FITTINGS			
ITEM	QTY	PART #	DESCRIPTION
18	4	120665	Adapter, 6mj-4mb
18 old	4	120186	Adapter, 4mb-4fpx

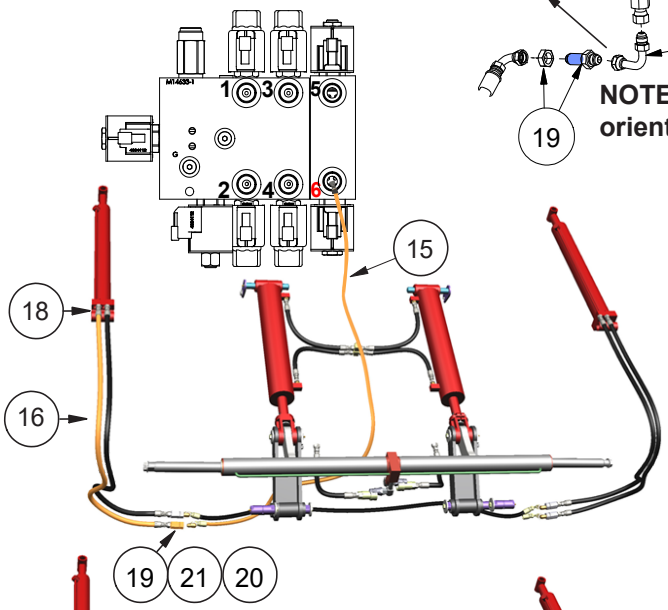

NEW FITTINGS			KIT: 205068
ITEM	QTY	PART #	DESCRIPTION
19N	2	120271	Adapter, 6mp-6fpx
20	4	120123	Adapter, 6fp-6fjx
21N	2	120596	Adapter, 6mj-6mp Long 90
22N	2	120597	Adapter, 6mj-6mp XX-Long 90
23	6	100578	Cable Tie 14" Black 50 Lb Tens

OLD FITTINGS			
ITEM	QTY	PART #	DESCRIPTION
19	4	120102	Adapter Bulkhead, 6mj-6mj
20	4	120123	Adapter, 6fp-6fjx
21	2	120598	Adapter, 6mj-6fjx 90 Bent Tube
22	2	120599	Adapter, 6mj-6fjx 90 Long Bent Tube

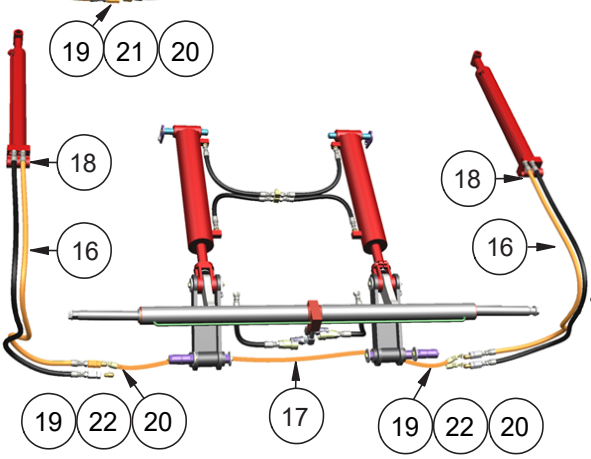

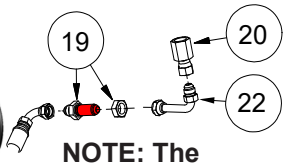

NOTE: The orientation of (19)

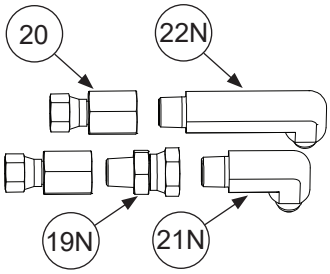

XRM HOSES:								
ITEM	**QTY**	**HOSE ENDS**	**670**	**675, 676**	**677, 679**	**770, 776, 778**	**_82, _84**	**_87, _88**
15	2	.37 - 6FJX/6FJX90M	220625 (148”)	220626 (164”)	220627 (174”)	220626 (164”)	220627 (174”)	220629 (200”)
16	4	.37 - 6MPX/6-4MP	220605 (54.3”)	220605 (54.3”)	220605 (54.3”)	220605 (54.3”)	220605 (54.3”)	220605 (54.3”)
17	1	.37 - 6FJX90/6FJX90	220601 (79.6”)	220601 (79.6”)	220601 (79.6”)	220645 (94.0”)	220645 (94.0”)	220645 (94.0”)
HOSE KIT				**223010**	**223009**	**223021**	**223022**	**223023**

600/700 XRM PIVOT HOSE ROUTING & PARTS

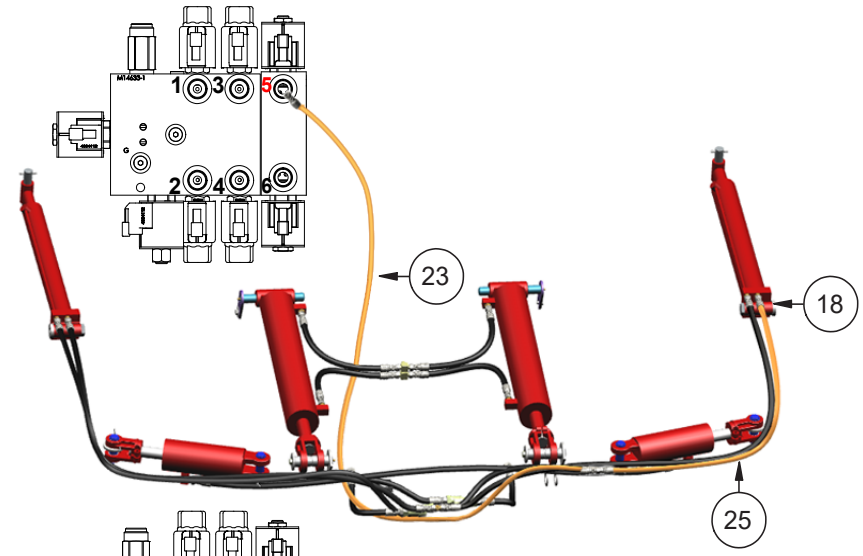

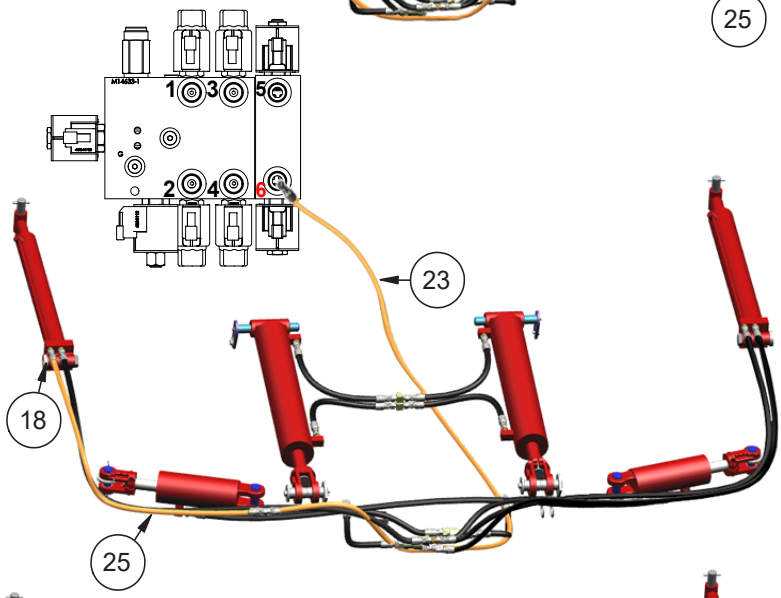

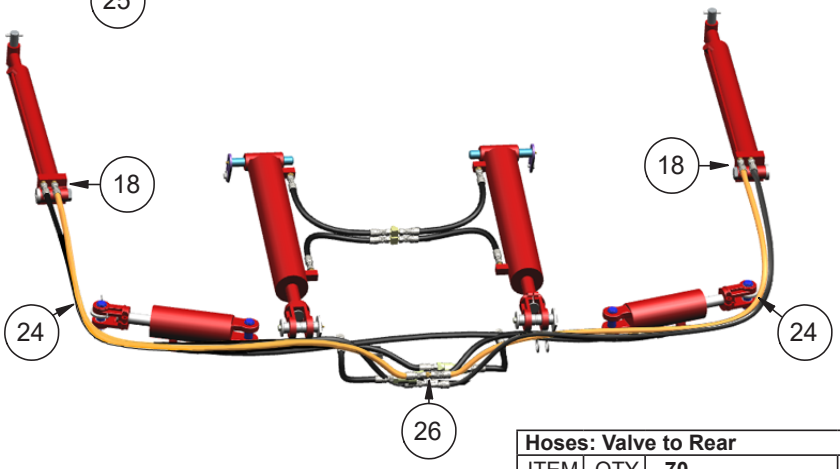

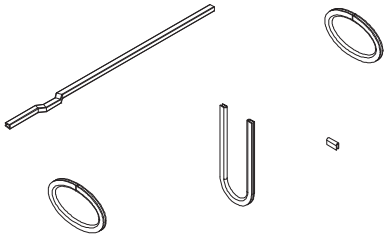

Edge Molding	
112084	Rubber Seal .50 x .25 (sold by the foot)

Refer to PG. 30 for common LIFT hoses

Refer to PG. 31 for commom PIVOT SQUEEZE hoses

FITTINGS			
ITEM	QTY	PART #	DESCRIPTION
26	1	120603	Adapter, 6MJ-6MJ
18	4	120665	Adapter, 6MJ-4MB

Hoses: Valve to Rear					
ITEM	QTY	**_70**	**_75**	**_82**	**_87**
23	2	220728 (111 in)	220729 (127 in)	220644 (137 in)	220731 (163in)
KIT		**223063**	**223064**	**223065**	**223066**

Hoses: At Cylinders					
ITEM	QTY	**Hoses**	**67_**	**68_**	**7_ _**
24	2	XRM Crossover	220732 (64 in)	220733 (72 in)	220734 (75 in)
25	2	XRM to Front Hose	220735 (69 in)	220736 (77 in)	220737 (80 in)
KIT			223060	223061	223062

235047	REV:

VALVE SWITCHES KIT

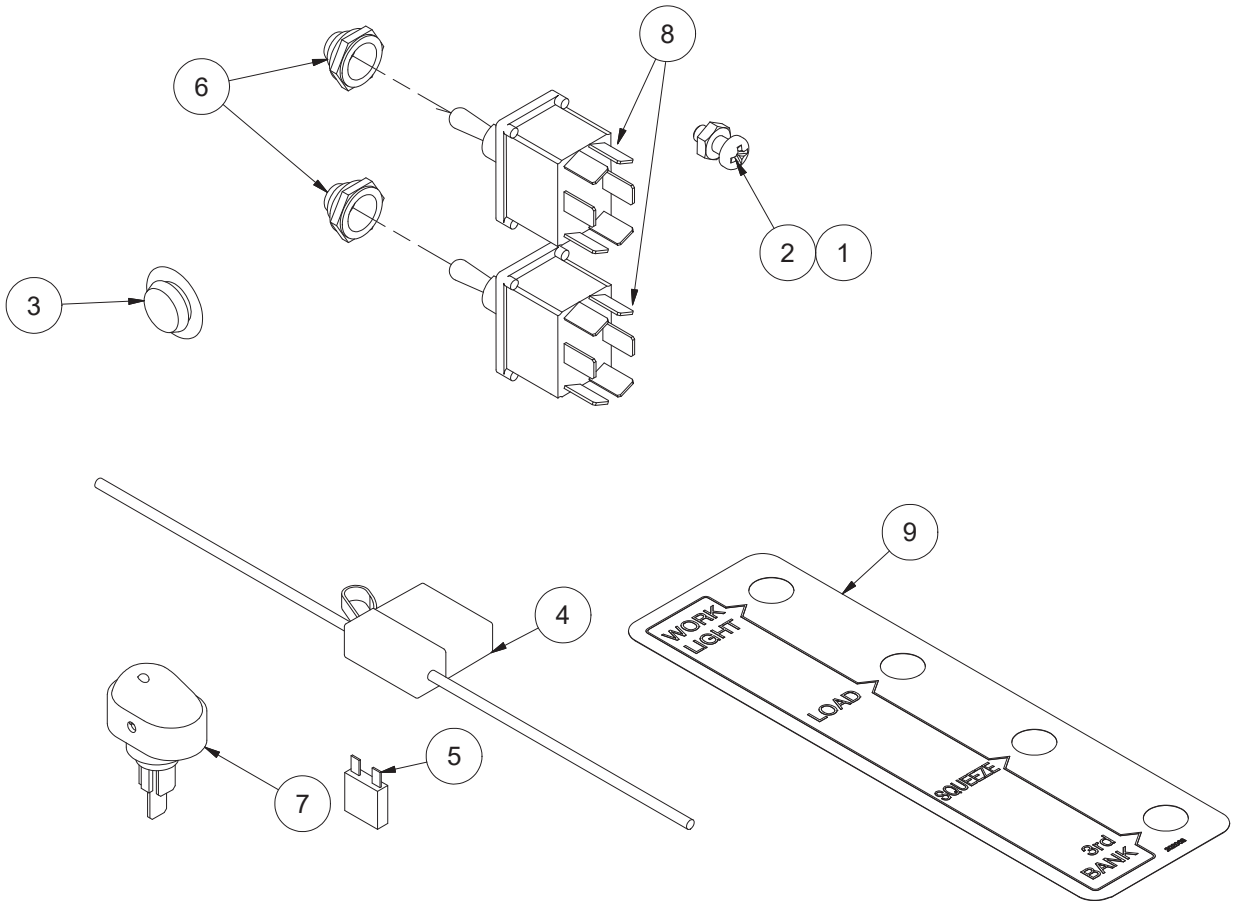

Non-Kit Switches

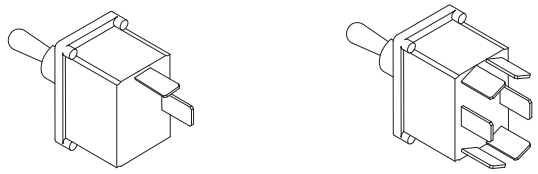

QTY	PART #	DESCRIPTION
1	132135	Work Light Switch, Toggle, SPST, On-Off
1	132134	AUX 3rd Bank, DPDT, On-Off-On
1	132127	XRM 3rd Bank, Momentary, (On)-Off-(On)

Parts List			Kit: 235047
ITEM	QTY	PART #	DESCRIPTION
1	1	110119	Nut, 10-24 Lock
2	1	110264	Bolt, 10-24 X .5 Stainless, Phillips
3	2	110753	Plug, 1/2" Button Plastic
4	1	132001	Fuse Holder, Atc, 14 Ga., Mini
5	1	132002	Fuse, Mini 30 Amp
6	2	132035	Switch Boot
7	1	132044	Switch, SPST, Rocker LED
8	2	132127	Switch, Momentary (On)-Off-(On)
9	1	202003	Decal, Switch Identification

CLUTCH SWITCH ASSEMBLY

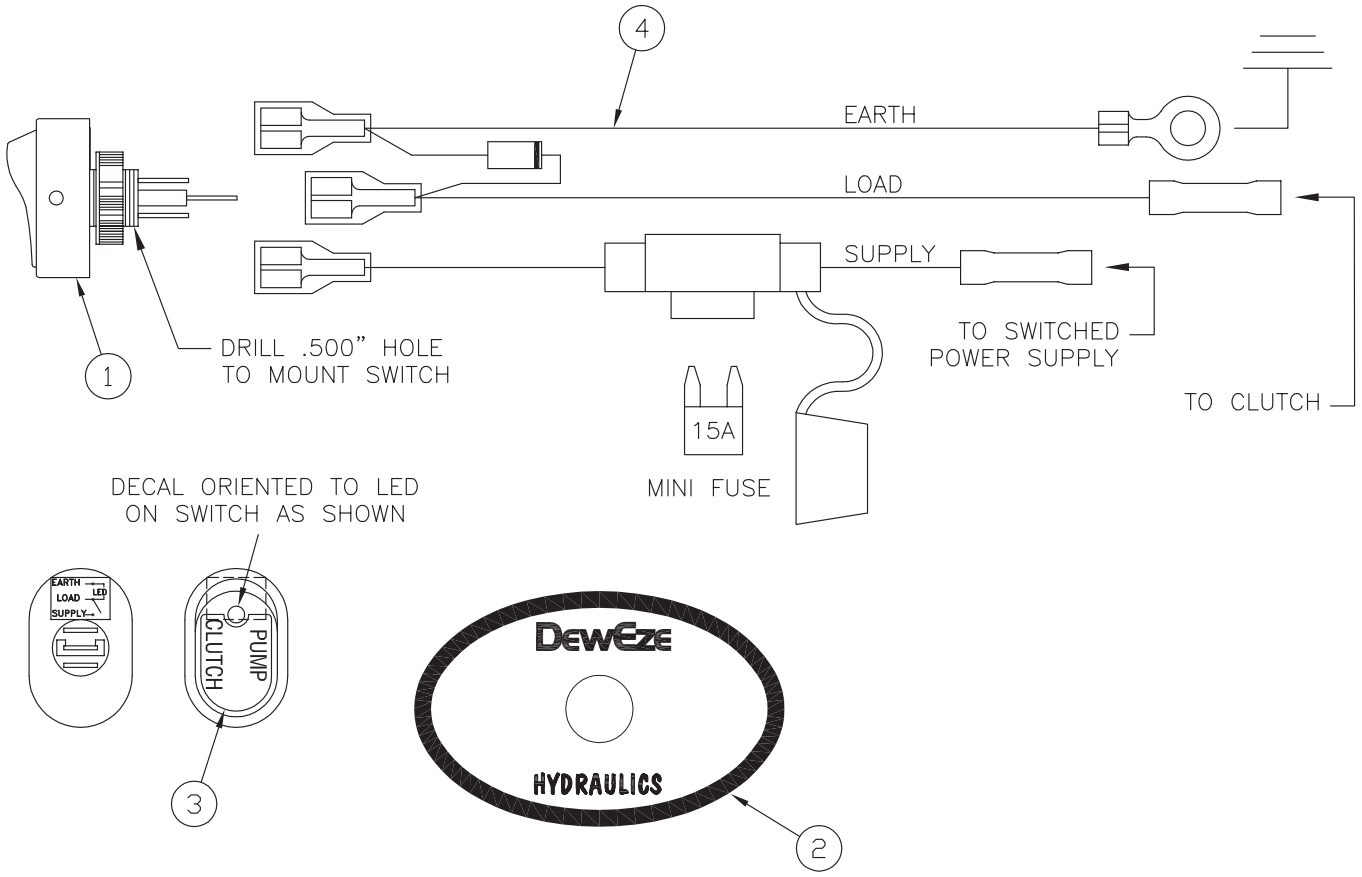

Parts List			KIT: 735001
ITEM	QTY	PART #	DESCRIPTION
1	1	132044	Switch, SPST Rocker LED
2	1	702002	Decal, Deweze Hydraulics
3	1	702061	Decal, Pump Clutch
4	1	732002	Harness, Clutch Control

REV:

ELECTRICAL HARNESSES: 2018+

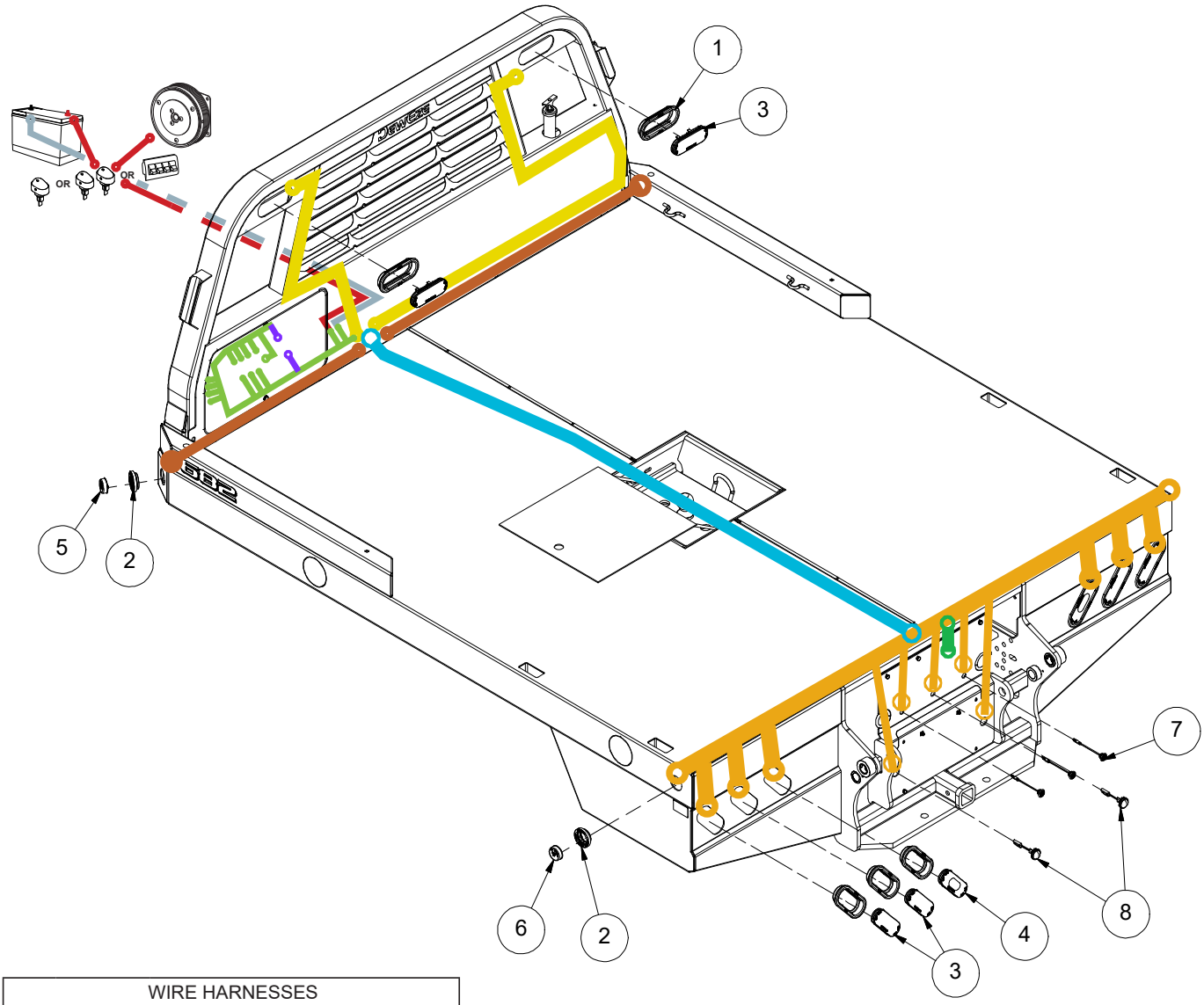

WIRE HARNESSES		
QTY	PART #	DESCRIPTION
	232133	Rear Tailboard, Female Pin
	232134	Front Marker, Half
	232135	Headache Rack Left, 78”
	232136	Headache Rack Right, 108”
	232137	Body Harness Short
	232138	Body Harness Long (_87 & _88)
	232087	Spade Valve Harness
	232088	Spade 3rd Bank Harness
	232098	Deutch Valve Harness
	232099	Deutch 3rd Bank Harness
		To 12Vdc Power
		To Negative Battery Terminal
		OEM To Deweze Adapter

PARTS LIST			
ITEM	QTY	PART #	DESCRIPTION
1	8	232125	Grommet, 6" Oval, Grote
2	4	232126	Grommet, 2" Round, Grote
3	6	232127	Light, Oval, S/T/T, Male Pin, Grote
4	2	232128	Light, Oval, S/T/T, BackUp, Male Pin, Grote
5	2	232129	Light, 2" Round, Amber, Grote 47113
6	2	232130	Light, 2" Round, Red, Grote 47112
7	3	232131	Light, 3/4" Round, Red, Grote 49332
8	2	232132	Light, License Plate, w/Plug, Grote

ELECTRICAL HARNESSES: 12A01 - 2018 (6/2018)

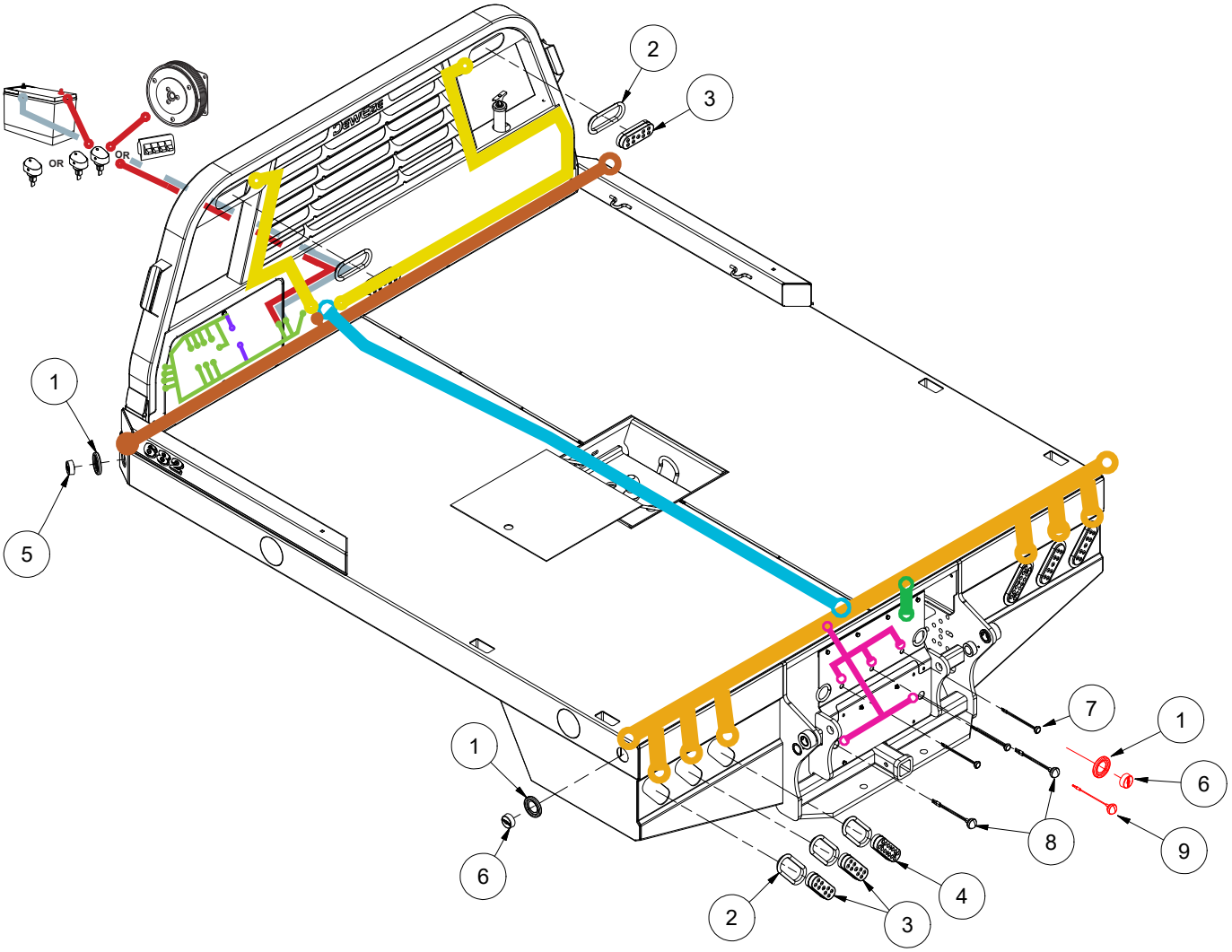

WIRE HARNESSES		
QTY	PART #	DESCRIPTION
	232063	Body Harness Short
	232064	Body Harness Long (-87 & -88)
	232065	Headache Rack Left
	232067	Headache Rack Right
	232068	Front Marker
	232069	Rear Tailboard
	232093	I.D. & License
	232087	Spade Valve Harness
	232088	Spade 3rd Bank Harness
	232098	Deutch Valve Harness
	232099	Deutch 3rd Bank Harness
		To 12Vdc Power
		To Negative Battery Terminal
		OEM To Deweze Adapter

*2009 Anniversary Parts			
ITEM	QTY	PART #	DESCRIPTION
9	2	230011	Incandescent Light, License Plate
1	3	230135	Grommet, 2”
6	3	232073	Light, 2” Round LED, RED

PARTS LIST			
ITEM	QTY	PART #	DESCRIPTION
1	4	230135	Grommet, 2"
2	8	232060	Light, Grommet Oval
3	6	232070	Light, Oval Led, S/T/T
4	2	232071	Light, Oval Led, Back-Up
5	2	232072	Light, 2" Round Led, Amber
6	2	232073	Light, 2" Round Led, Red
7	3	232091	Light, 3/4" Round, Led, Red
8	2	235016	Light, License Plate, Led W/.180 Bullets

HARNESS ADAPTERS: OEM TO DEWEZE

ITEM		DESCRIPTION	YEAR
232235	FORD	Harness Adapter Ford BTO	2023 +
232184		Harness Adapter Ford BTO	2020 - 2022
232192		BLIS add on to 232184 (Cut and cap the two red wires from existing splice. Crimp the main red wire into 232192)	-
232119		Harness Adapter Ford BTO	2017 - 2019
232118		Harness Adapter Ford BTO	2011 - 2016
232046		Harness Adapter Ford BTO	2000 - 2010
232047		Harness Adapter Ford CC	2000 - 2024
232237	CHEVY	Harness Adapter Chevy / GMC BTO	2024
232181		Harness Adapter Chevy / GMC BTO	2020 - 2023
232117		Harness Adapter Chevy / GMC CC & BTO	2016 - 2019
232116		Harness Adapter Chevy / GMC CC & BTO	2015
232050		Harness Adapter Chevy / GMC BTO	2002 - 2014
232050		Harness Adapter Chevy / GMC CC	2002 - 2014
232186		Harness Adapter Chevy / GMC CC	2020 - 2023
232194	DODGE	Harness Adapter Dodge / Ram BTO Incandescent	2000 - 2023
232233		Harness Adapter Dodge / Ram BTO LED Add (x2) to the 232194	2000 - 2023
232059		Harness Adapter Dodge / Ram CC	2007 - 2024
232049		Harness Generic, Flatbed to Blunt Cut	-
232079		LED Load Equalizer (Maxxima)(PL3 Connector)(Yellow Male/Black Female)	-
232143		LED Load Equalizer (Grote Connector) (Round)(Blue Male/Blue Female)	-

SWINGOUT WORKLIGHTS

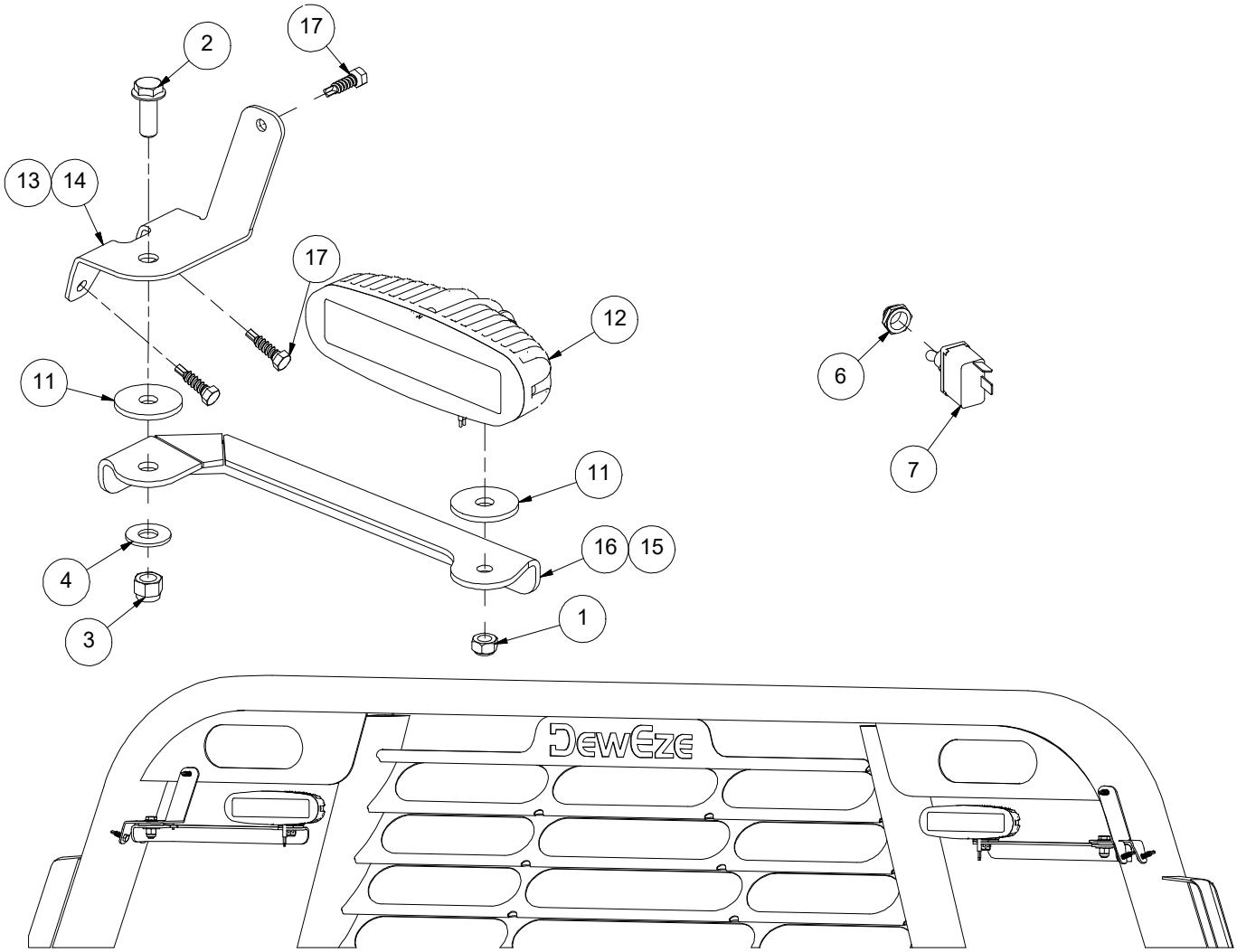

PARTS LIST			KIT: 205114
ITEM	QTY	PART #	DESCRIPTION
1	2	110230	Nut, M8 X 1.25, Lock Nylon
2	2	110440	Bolt, 3/8-16 X 1, Wiz Flange
3	2	110618	Nut, 3/8-16 Lock Nylon Insert
4	2	110676	Washer, 3/8" Flat Standard
5	5ft	130004	Wire, 14ga Black
6	1	132035	Switch Boot
7	1	132135	Switch, Toggle, Spst, On-Off
8	3	132147	Terminal, Butt Connector, 16-14, Heat Shrink
9	2	132148	Terminal, Ring, 16-14, 1/4", Heat Shrink
10	1	132149	Terminal, Multi-Wire Butt Conn, Heat Shrink
11	4	211747	Friction Washer 1.5"
12	2	232139	Light, Led, 5" Rect, Flood, W/Connector
13	1	260622	Bracket, Swing Light, Base, Right
14	1	260623	Bracket, Swing Light, Base, Left
15	1	260624	Bracket, Swing Light, Arm, Right
16	1	260625	Bracket, Swing Light, Arm, Left
17	6	710586	Screw, 1/4 X 1 Tek Self-Tap

REV:

CARGO LIGHTS

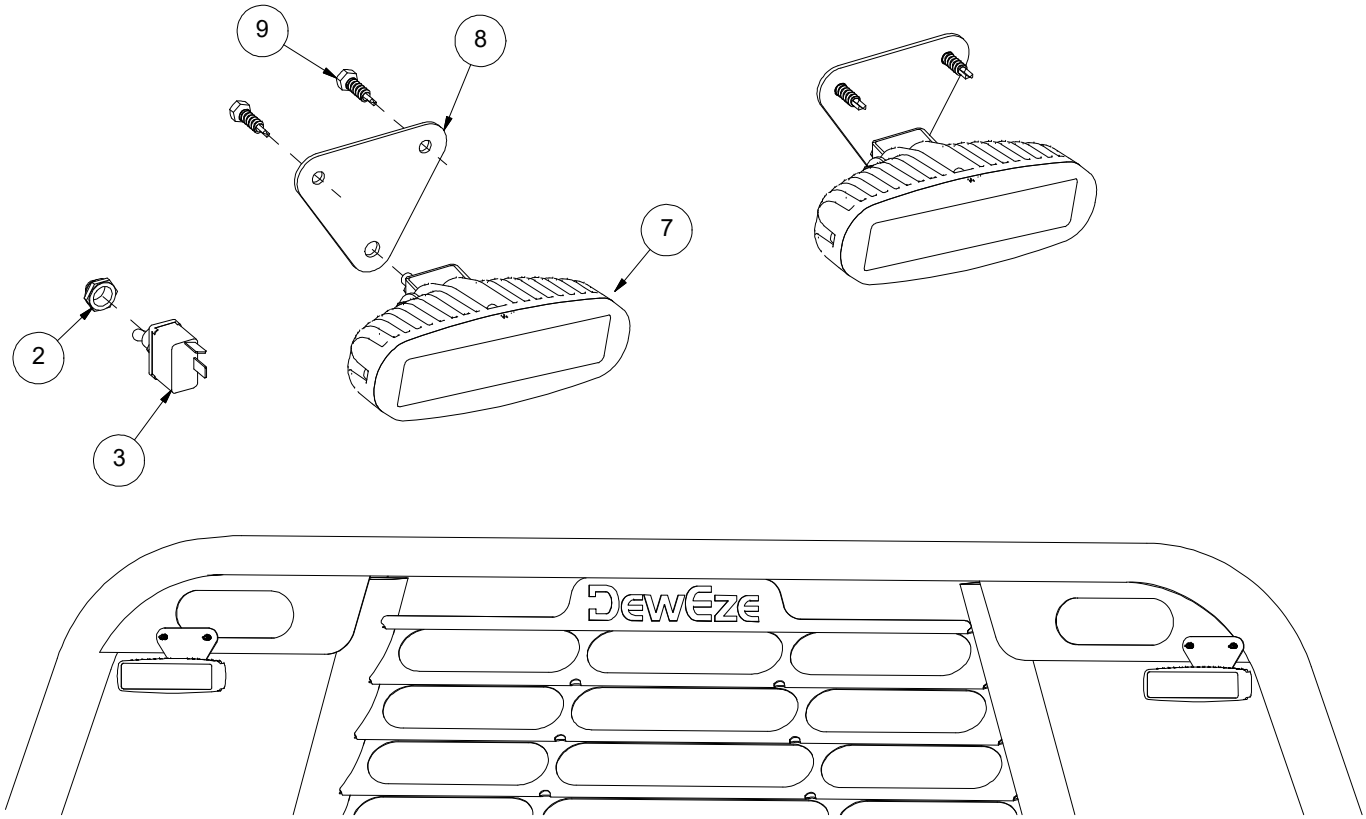

PARTS LIST			KIT: 205113
ITEM	QTY	PART #	DESCRIPTION
1	5ft	130004	Wire, 14ga Black
2	1	132035	SWITCH BOOT
3	1	132135	Switch, Toggle, SPST, On-Off
4	3	132147	Terminal, Butt Connector, 16-14, Heat Shrink
5	2	132148	Terminal, Ring, 16-14, 1/4", Heat Shrink
6	1	132149	Terminal, Multi-Wire Butt Conn, Heat Shrink
7	2	232139	Light, LED, 5" Rect, Flood, W/Connector
8	2	260626	Bracket, Cargo Light
9	4	710586	SCREW, 1/4 X 1 TEK SELF-TAP
17	6	710586	Screw, 1/4 X 1 Tek Self-Tap

CORDED REMOTE: SPADE 2 BANK

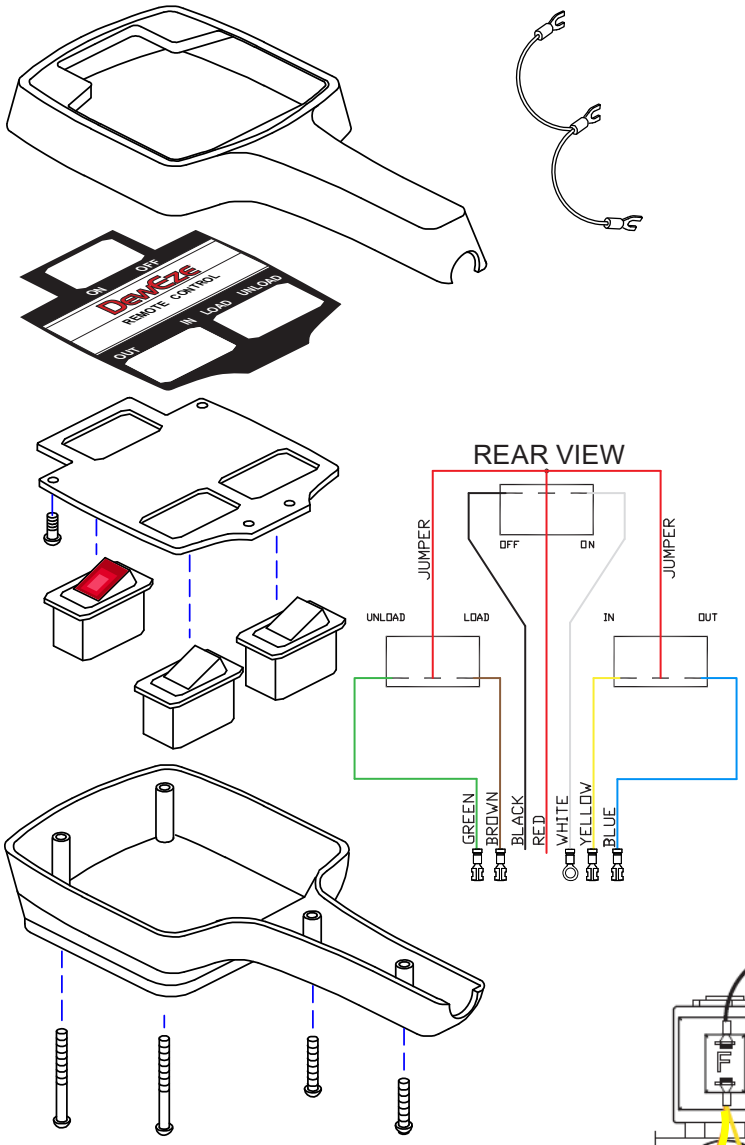

Parts List			
ITEM	QTY	PART #	DESCRIPTION
1	1	130001	Rocker Switch w/Light
2	2	130002	Rocker Switch Momentary
3	1	150001	Top Housing, Hand Control
4	1	150003	Bottom Housing, Hand Control
5	1	150002	Switch Plate, Hand Control
6	1	150004	Decal, Hand Control
7	4	150013	Screw, #6 X 1/4 Type F
8	2	150015	Screw, #6 X 1.5 Sheetmetal
9	2	150014	Screw, #6 X 1 Sheetmetal
10	1	230147	Cable W/Fuse, Holder & Jumper
11	1	232038	Diode Harness
12	1	232039	Ground Harnes
13	1	132001	Fuse Holder, ATC, 14ga., Mini
14	1	132002	Fuse, Mini 30 Amp
15	1	130032	Jumper, 3-end

KITS			
ITEM	QTY	PART #	DESCRIPTION
1	1	150006	Kit, Hand Control Corded
2	1	235010	Kit, Diode & Ground Harnesses

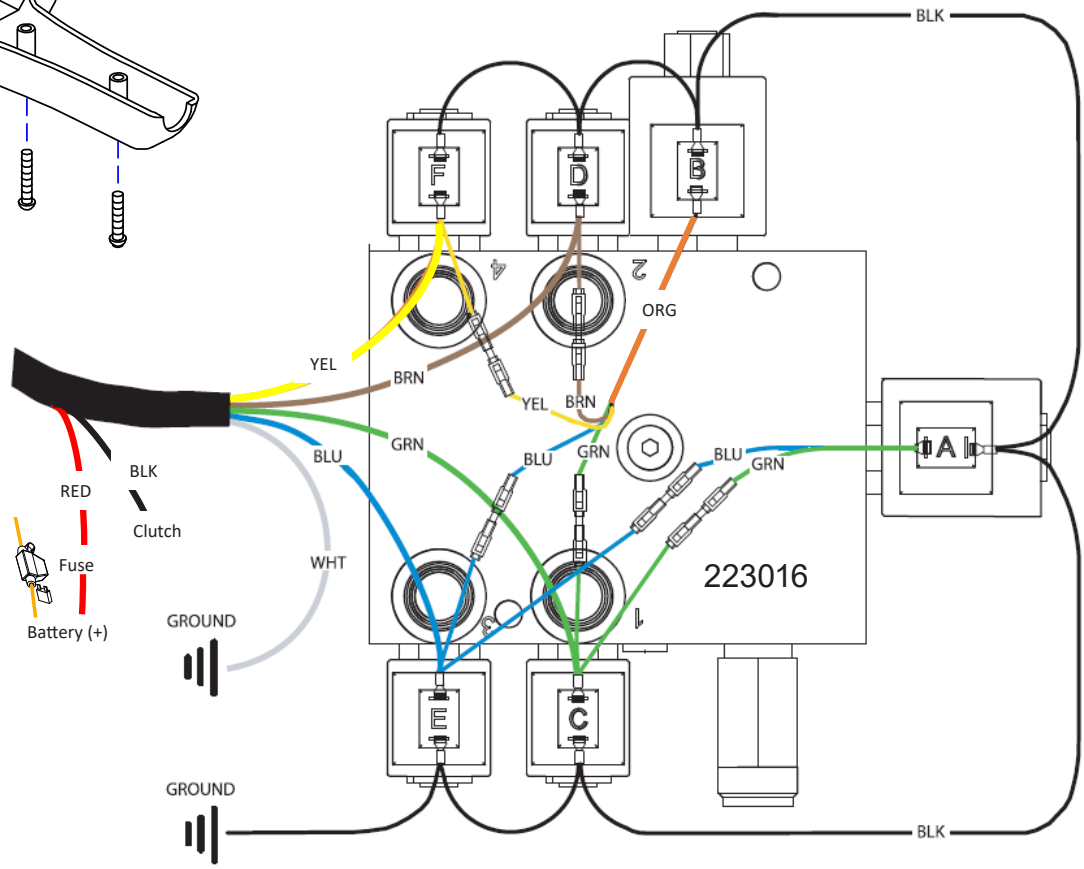

CORDED REMOTE: SPADE 3 BANK

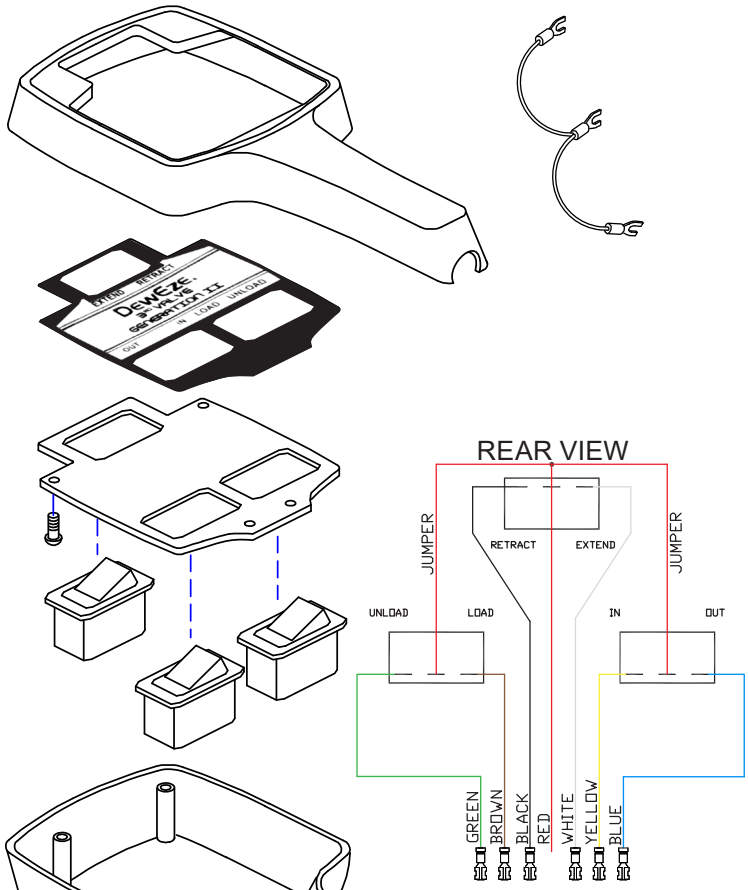

Parts List			
ITEM	QTY	PART #	DESCRIPTION
1	3	130002	Rocker Switch Momentary
2	1	150001	Top Housing, Hand Control
3	1	150003	Bottom Housing, Hand Control
4	1	150002	Switch Plate, Hand Control
5	1	150036	Decal, Hand Control
6	4	150013	Screw, #6 X 1/4 Type F
7	2	150015	Screw, #6 X 1.5 Sheetmetal
8	2	150014	Screw, #6 X 1 Sheetmetal
9	1	230147	Cable W/Fuse, Holder & Jumper
10	1	232052	Diode Harness
11	1	232051	Ground Harness
12	1	132001	Fuse Holder, ATC, 14ga., Mini
13	1	132002	Fuse, Mini 30 Amp
14	1	130032	Jumper, 3-end

KITS			
ITEM	QTY	PART #	DESCRIPTION
1	1	150037	Kit, Hand Control Corded
2	1	232052	Diode Harness
3	1	232051	Ground Harness

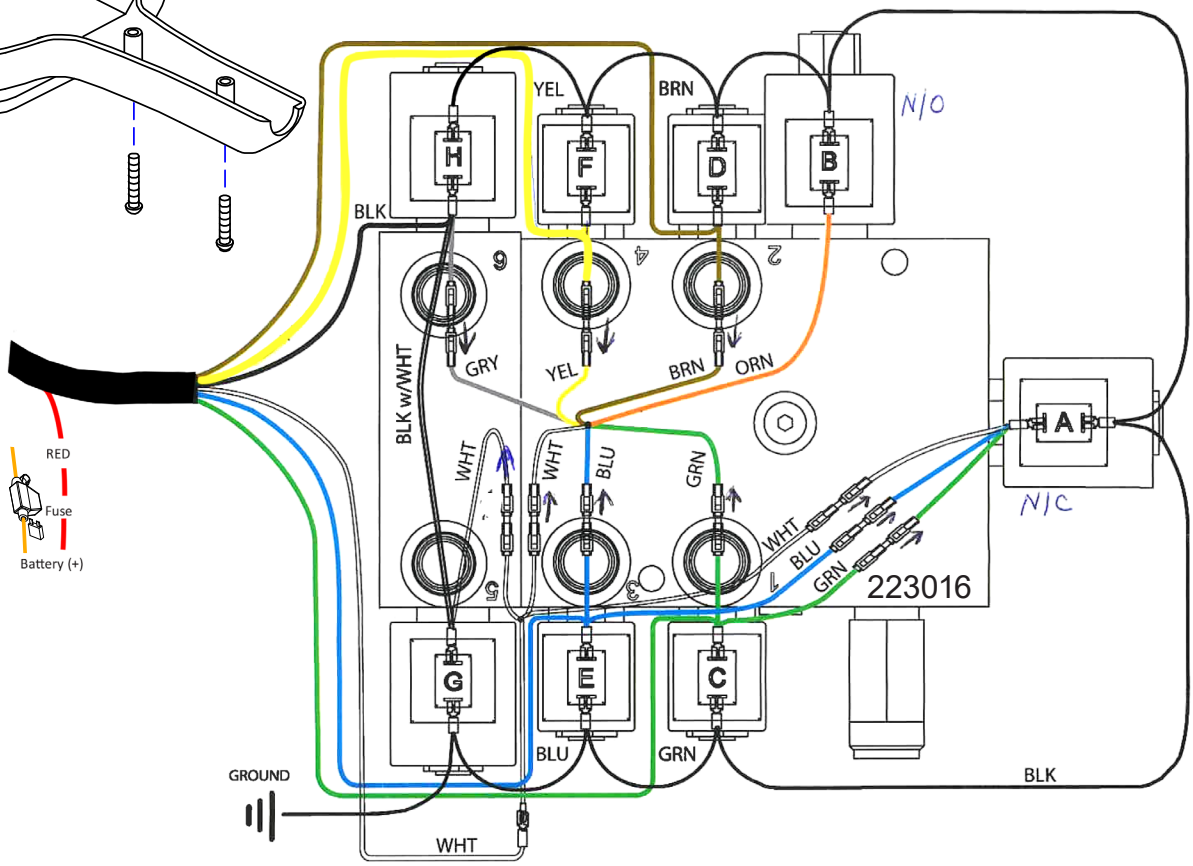

150044 REV:

CORDED REMOTE: DEUTCH 2 BANK

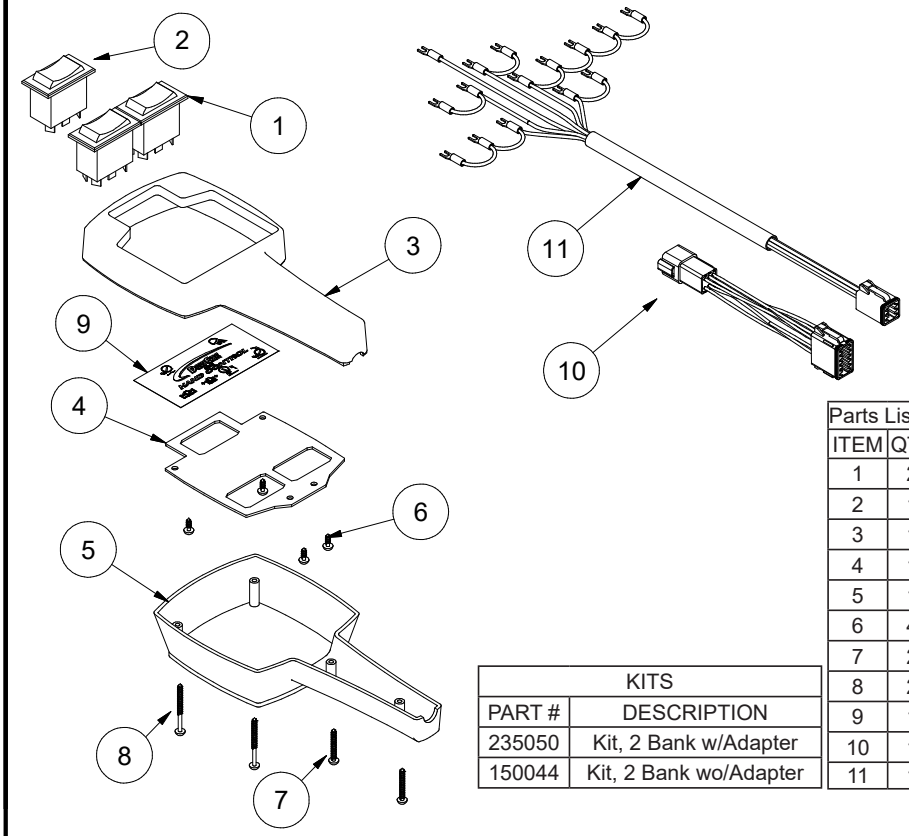

Wiring Diagram
Switches Shown From Back Side

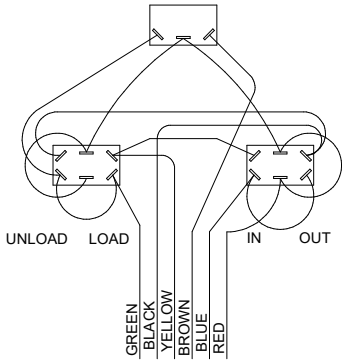

KITS	
PART #	DESCRIPTION
235050	Kit, 2 Bank w/Adapter
150044	Kit, 2 Bank wo/Adapter

Parts List — Kit: 150044

ITEM	QTY	PART #	DESCRIPTION
1	2	130029	Switch, Rocker, DPDT
2	1	130065	Switch, Rocker, On-Off-(On)
3	1	150001	Top Housing, Hand Control
4	1	150002	Switch Plate, Hand Control
5	1	150003	Bottom Housing, Hand Control
6	4	150013	Screw, #6 X 1/4 Type F
7	2	150014	Screw, #6 X 1 Sheetmetal
8	2	150015	Screw, #6 X 1.5 Sheetmetal
9	1	202082	Decal, Hand Control, 2 Bank, Gen III
10	1	230105	Adapter, Hand Control, 2 bank
11	1	230162	Cable, Hand Control, 2 Bank

150045 REV:

CORDED REMOTE: DEUTCH 3 BANK

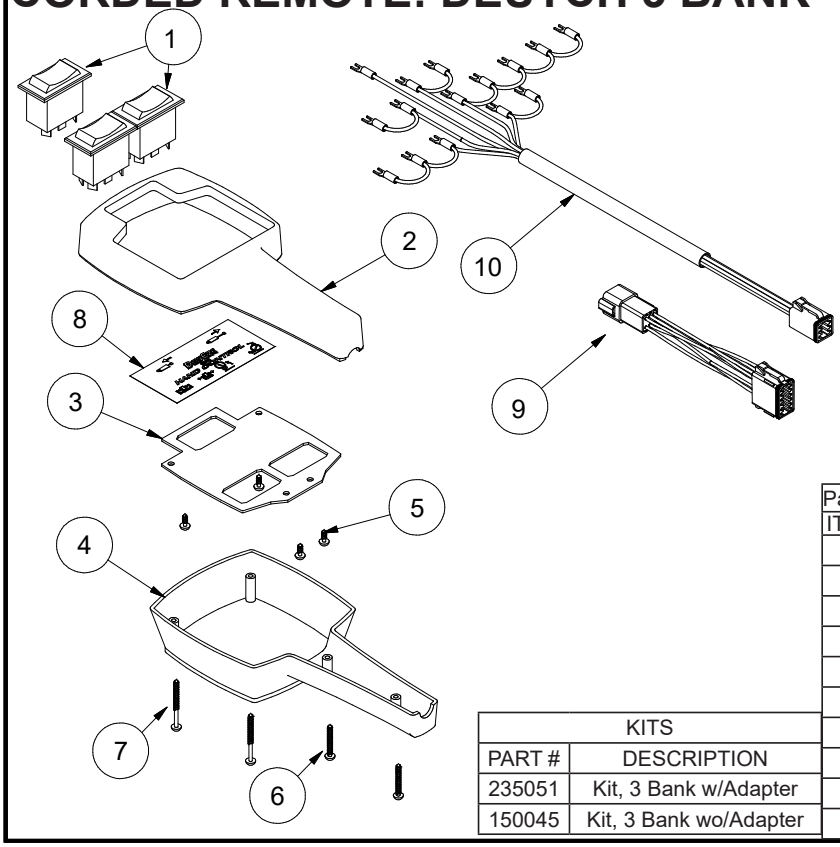

Wiring Diagram
Switches Shown From Back Side

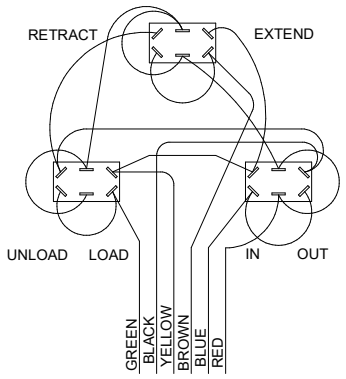

KITS	
PART #	DESCRIPTION
235051	Kit, 3 Bank w/Adapter
150045	Kit, 3 Bank wo/Adapter

Parts List — Kit: 150045

ITEM	QTY	PART #	DESCRIPTION
1	2	130029	Switch, Rocker, DPDT
2	1	150001	Top Housing, Hand Control
3	1	150002	Switch Plate, Hand Control
4	1	150003	Bottom Housing, Hand Control
5	4	150013	Screw, #6 X 1/4 Type F
6	2	150014	Screw, #6 X 1 Sheetmetal
7	2	150015	Screw, #6 X 1.5 Sheetmetal
8	1	202083	Decal, Hand Control, 3 Bank, Gen III
9	1	232106	Adapter, Hand Control, 3 bank
10	1	230163	Cable, Hand Control, 3 Bank

KAR-TECH WIRELESS: DEWEZE AG

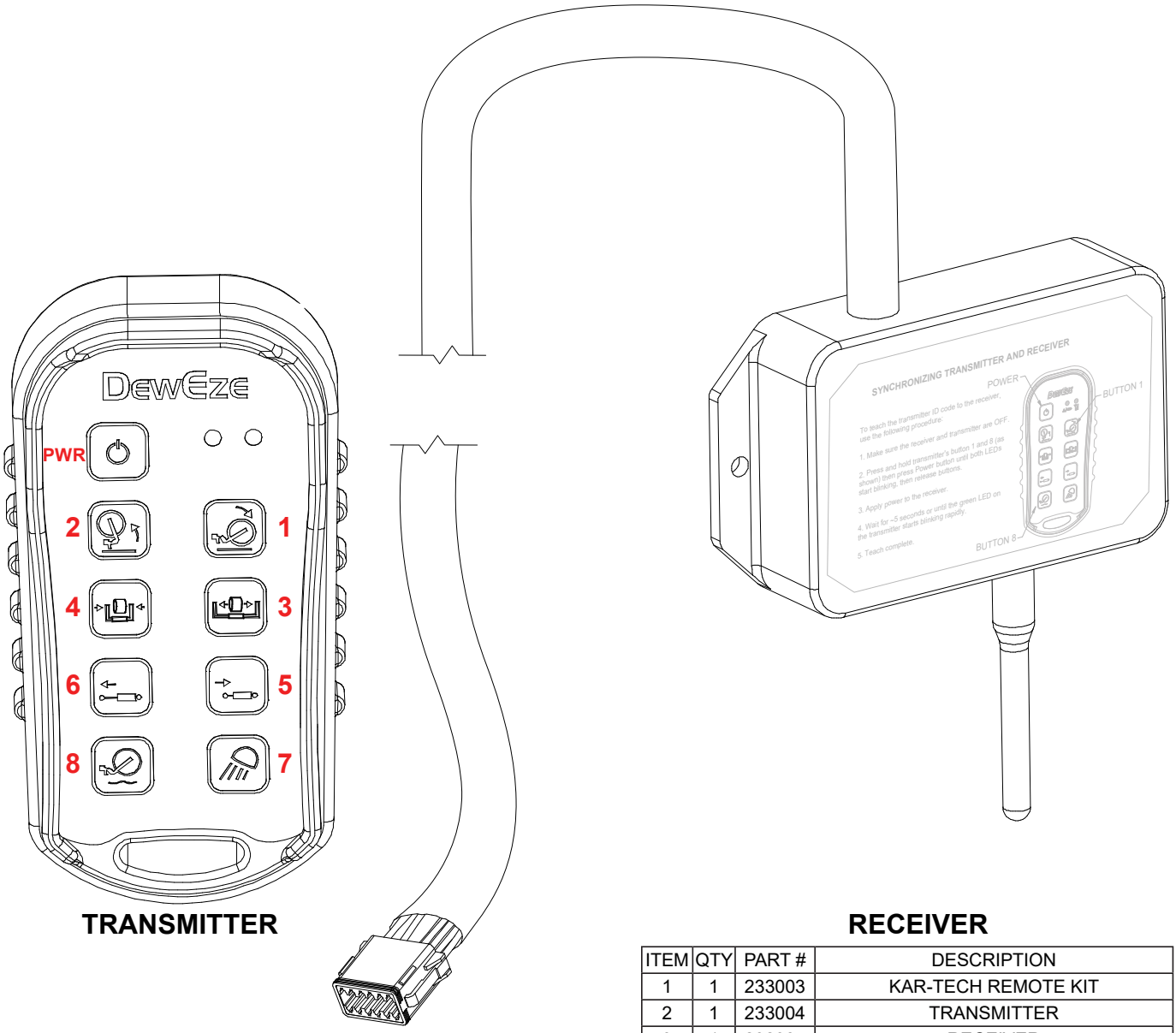

TRANSMITTER

RECEIVER

ITEM	QTY	PART #	DESCRIPTION
1	1	233003	KAR-TECH REMOTE KIT
2	1	233004	TRANSMITTER
3	1	232085	RECEIVER
4	1	235018	KAR-TECH **UPGRADE FROM DIGITEC**
5	1	235017	KAR-TECH **TO STANDARD E/H**

*** TWO VERSIONS OF THESE RECEIVERS EXIST!!**

NEW = DECAL ON RECEIVER

OLD = NO DECAL, ALL BLACK RECEIVER

NEW PAIRING

1. NO POWER - Receiver or Transmitter
2. HOLD 1 & 8 then PWR - RED & GREEN should blink.
3. POWER RECEIVER *immediately (*only 8 seconds or may time out)
4. GREEN LIGHT on transmitter should blink. MAY TAKE A FEW TRIES.
5. Test functions.

OLD PAIRING

1. OPEN RECEIVER with POWER APPLIED.
2. JUMPER the two pins until GREEN light IN RECEIVER stays lit. (**Fig 1**)
3. HOLD 1 & 8 then PWR - GREEN light IN RECEIVER blinks.
4. Test functions

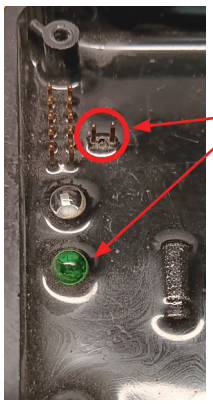

With power applied, jumper these two pins until the green light is lit solid then release the jumper.

A small, black jumper box is provided. If it is missing, use a screwdriver or coin; anything conductive will work.

Figure 1

WIRELESS: SPADE 2 BANK

Parts List			KIT: 235018
ITEM	QTY	PART #	DESCRIPTION
1	1	233003	Kar-Tech Remote Kit
2	1	233004	Transmitter
3	1	232085	Receiver
4	6	132110	Flyback Diode
5	1	530111	Relay
6	1	232087	Spade Valve Harness
7	1	132001	Fuse Holder, Atc, 14ga., Mini
8	1	132002	Fuse, Mini 30 Amp
9	1	202045	Schematic Sticker

HARNESS: **232087** IS FOR SPADE VALVES.

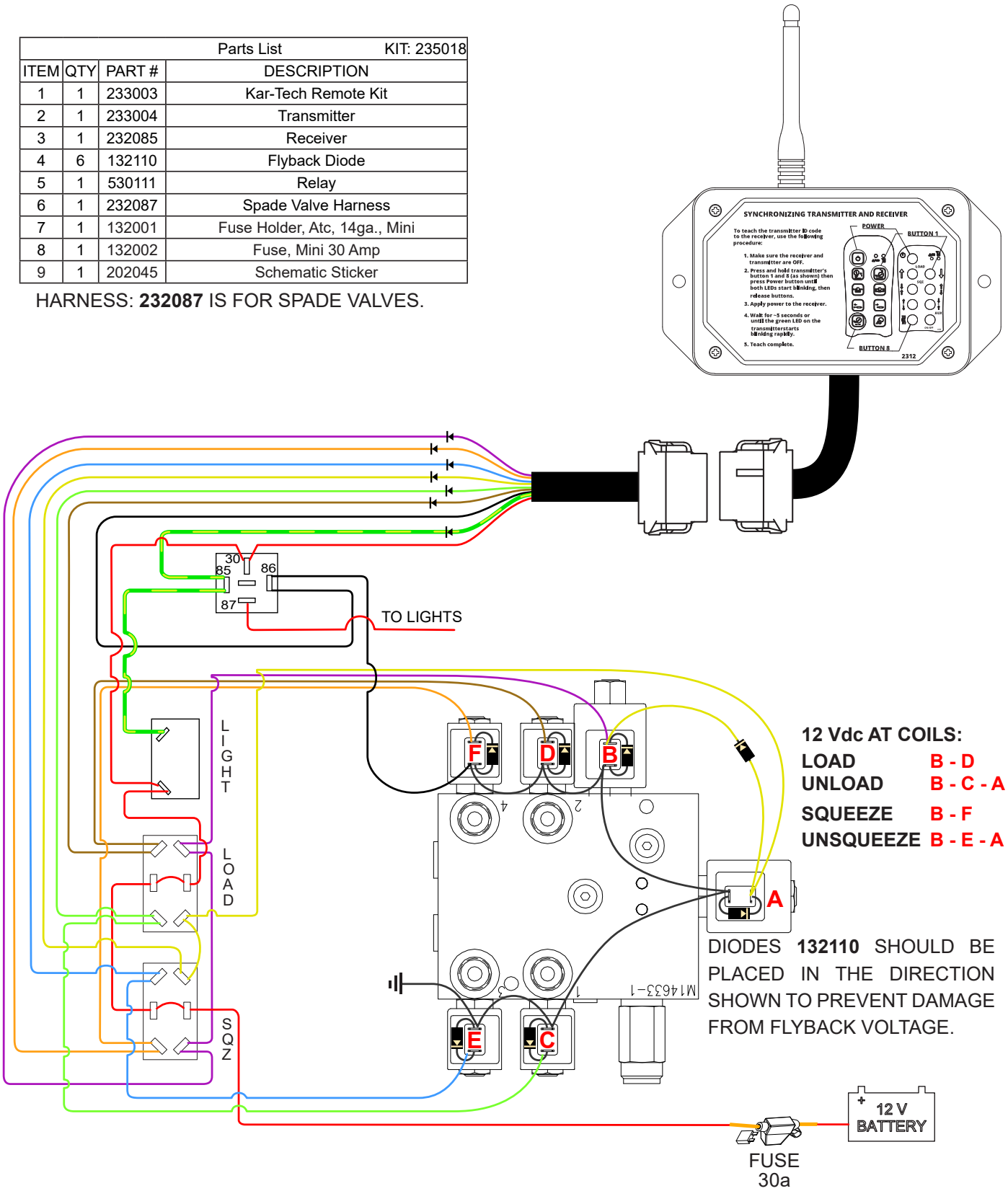

WIRELESS: DEUTCH 2 BANK

ITEM	QTY	PART #	DESCRIPTION
1	1	233003	Kar-tech remote kit
2	1	233004	Transmitter
3	1	232085	Receiver
4	1	232098	Deutch Valve Harness
5	1	530111	Relay
6	1	132001	Fuse holder, atc, 14ga., Mini
7	1	132002	Fuse, mini 30 amp
8	1	202053	Schematic Sticker

HARNESS: **232098** IS FOR DEUTCH VALVES.

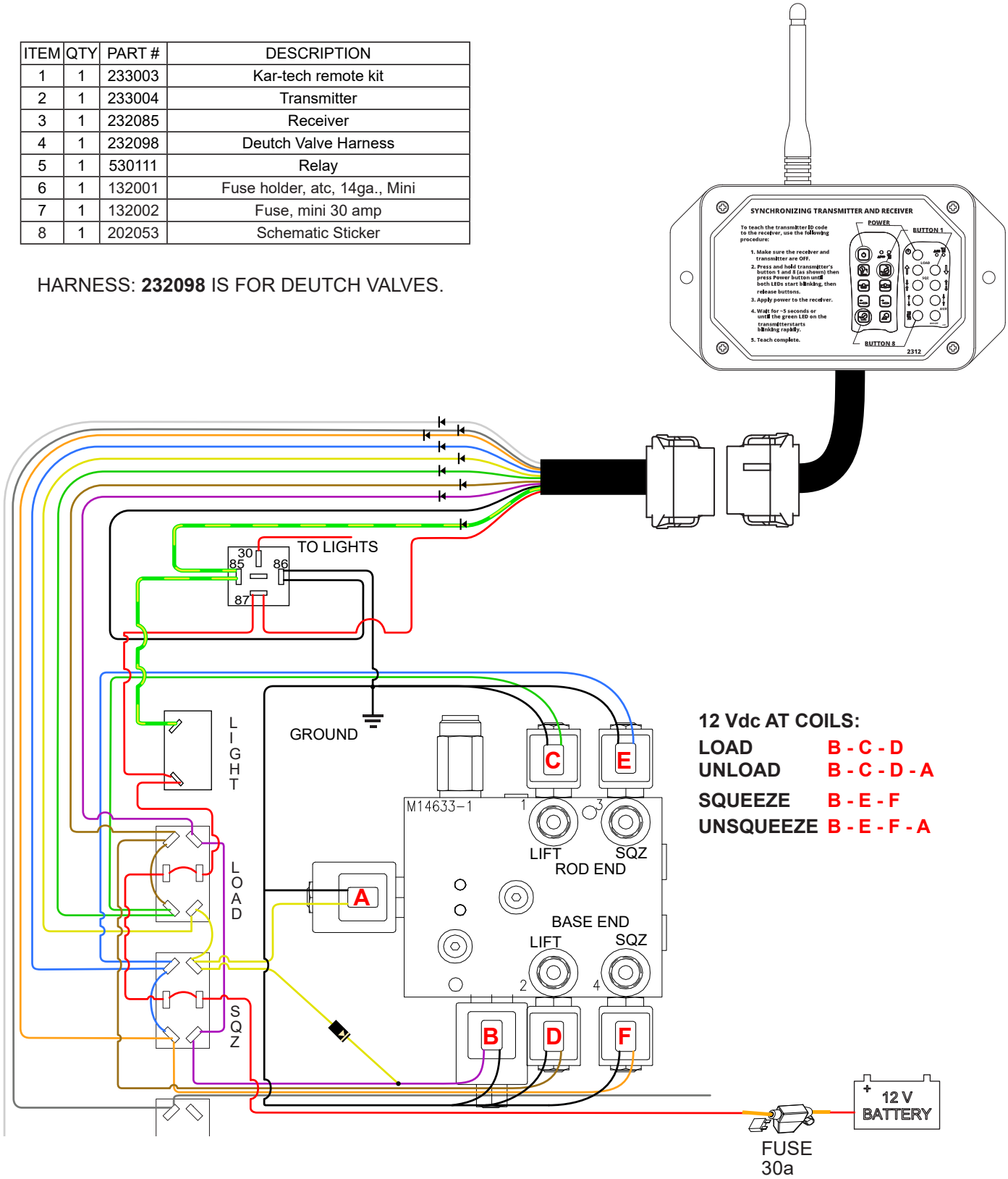

REV:

WIRELESS: SPADE 3 BANK

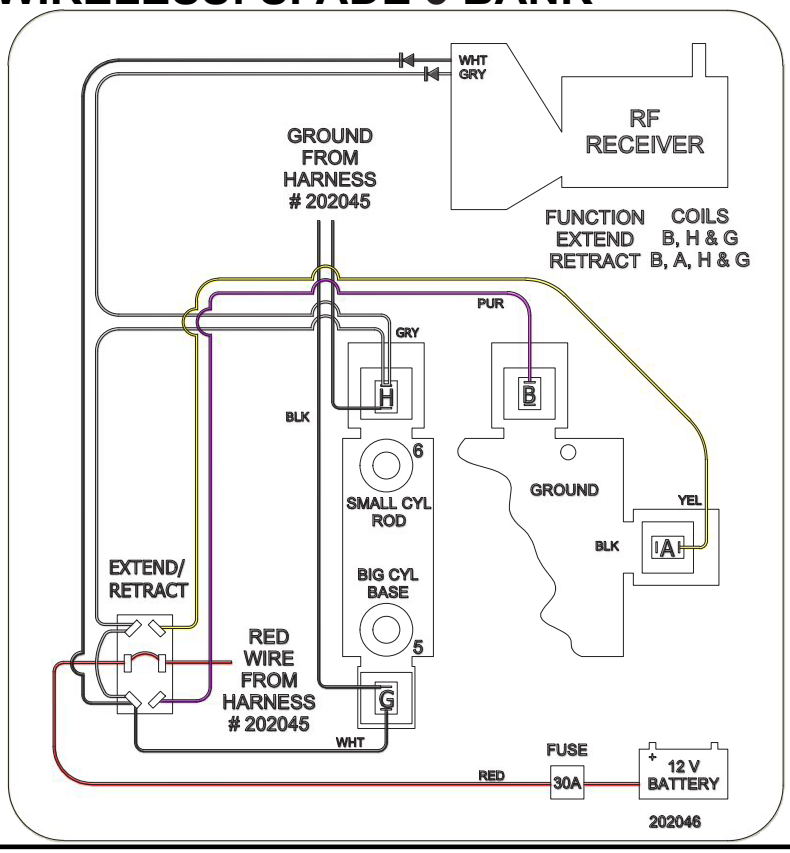

Harness Part# 232088

WIRELESS: DEUTCH 3 BANK

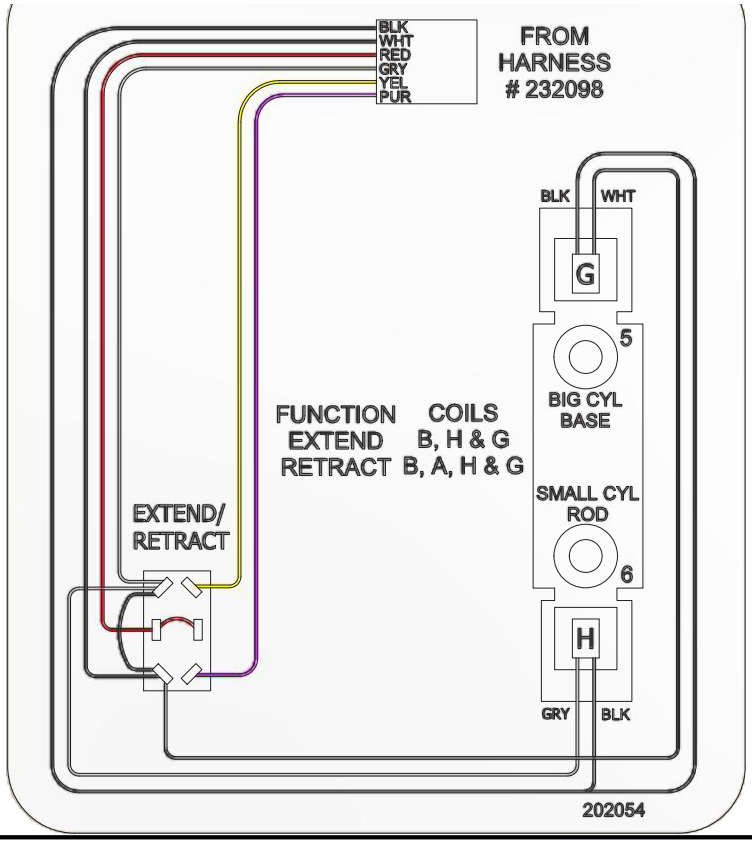

Harness Part# 232099

E/H STANDARD COMPONTENTS

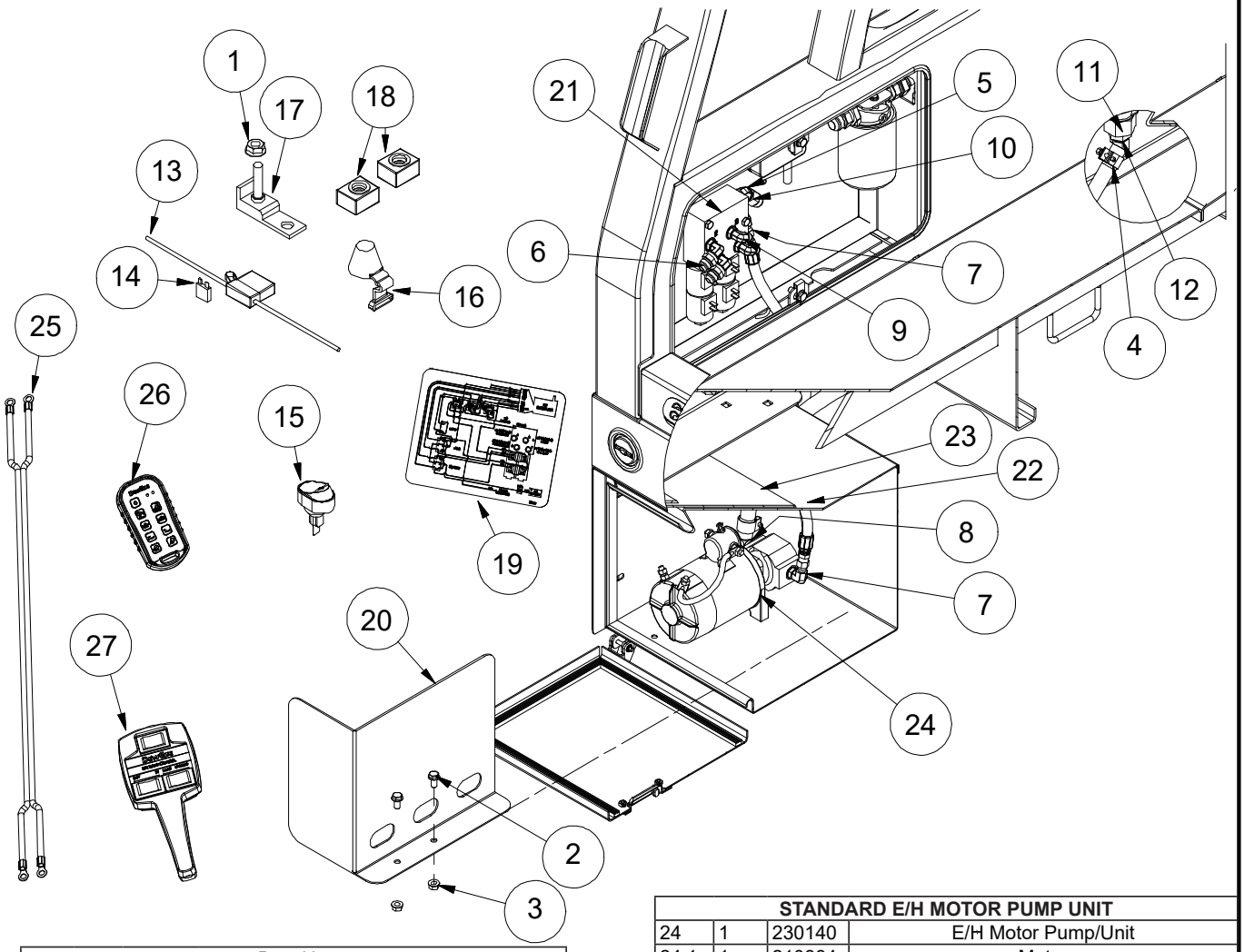

Parts List			
ITEM	QTY	Part #	DESCRIPTION
1	1	110141	Nut, M8 X 1.25 Wizflange
2	4	110437	Bolt, 3/8-16 X 0.75, Wiz Flange
3	2	110645	Nut, 3/8-16 Wiz Flange
4	2	112136	Clamp, 3/4" T-Bolt, Supra W2-120
5	1	120087	Adapter, 6mb-8mj45
6	2	120142	Adapter, 8mj-6fj
7	2	120149	Adapter, 6mb-6fpx90
8	1	120187	Adapter, 12bh-8mb90
9	4	120222	Adapter, 6mj-6mb90
10	1	120457	Adapter, 8fj-10mj
11	1	120544	Adapter, 20mb-12for
12	1	120545	Adapter, 12bh-12mb 45°
13	1	132001	Fuse Holder, Atc, 14 Ga., Mini
14	1	132002	Fuse, Mini 30 Amp
15	1	132044	Switch, Spst, Rocker Led
16	1	132092	Fuse Cover, Buss Cfcover-1r
17	1	132093	Fuse Holder, Buss Cfbar1-M8xsp
18	2	132094	Fuse 200 Amp, Buss Mrbf-200
19	1	202047	Decal, E/H Wiring Diagram, Kar-Tech
20	1	211353	E/H Shield
21	1	220492	Valve, E/H Flatbed
22	1	220508	Hose, .375 X 50.44, 6mp - 6mp
23	1	220603	Hose, Suction, .75 X 54

STANDARD E/H MOTOR PUMP UNIT			
24	1	230140	E/H Motor Pump/Unit
24.1	1	210884	Motor
24.2	1	220651	Pump
	1	222006	Seal Kit, Pump
	1	232089	Solenoid, 3 Pole, Heavy Duty
25	1	230155	Battery Cable, 2ga Twin Lead, 186"

WIRELESS CONTROL			
26	1	233003	Transmitter & Receiver, Kar-Tech
26.1		233004	Transmitter
26.2		232085	Receiver
	1	**232090**	**Harness, Standard E/H** Wireless, Kar-Tech

CORDED CONTROL			
27	1	233003	Hand Control, Corded Assembly

Not Shown			
	3	110119	Nut, 10-24 Lock
	3	110264	Bolt, 10-24 X .5 Stainless, Phillips
	2	110396	Bolt, 5/16-18 X 2.5
	2	110608	Nut, 5/16-18
	2	110674	Washer, 5/16" Lock
	2	110753	Plug, 1/2" Button Plastic
	2	132035	Switch Boot
	2	132127	Switch, Toggle, Dpdt, (On)-Off-(On)
	1	202003	Decal, Switch Identification
	1	211387	Edge Molding, Rear Plate

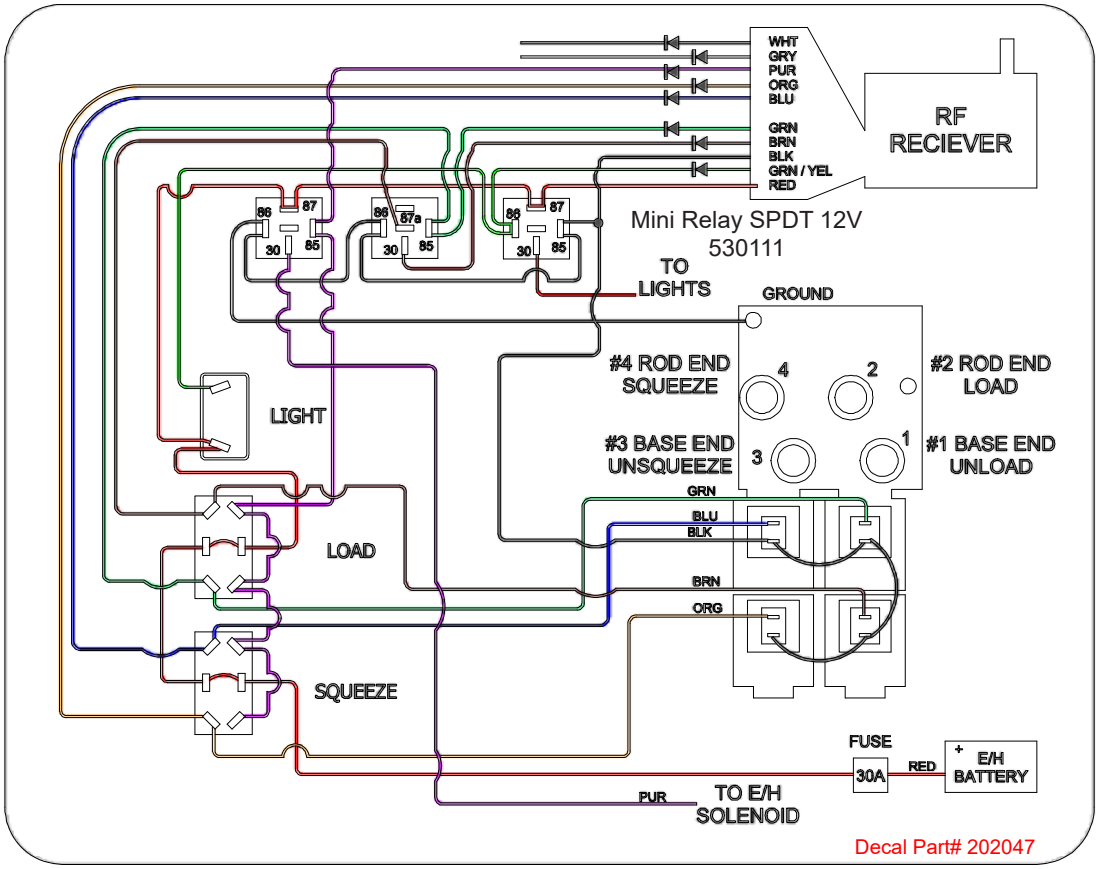

QTY	PART#	DESCRIPTION
1	220492	Valve, Standard E/H
2	210871	Cartridge
4	820229	Coil

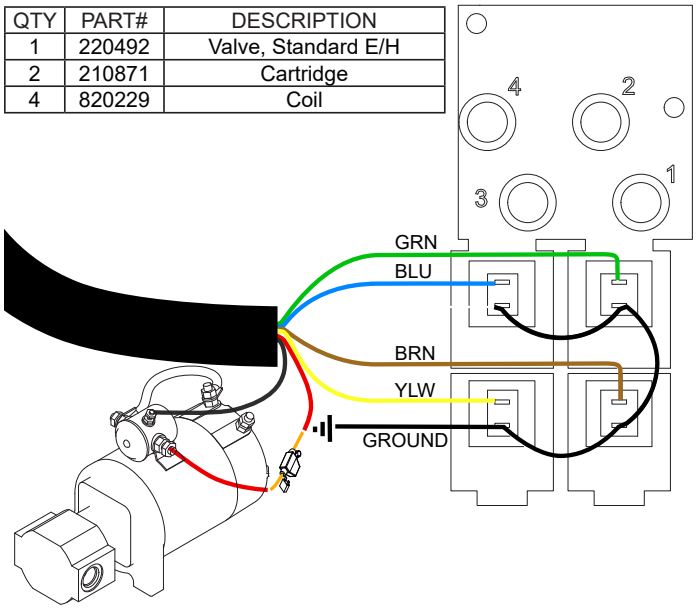

12 Vdc AT COILS:

LOAD	**BROWN**
UNLOAD	**GREEN**
SQUEEZE	**YELLOW**
UNSQUEEZE	**BLUE**

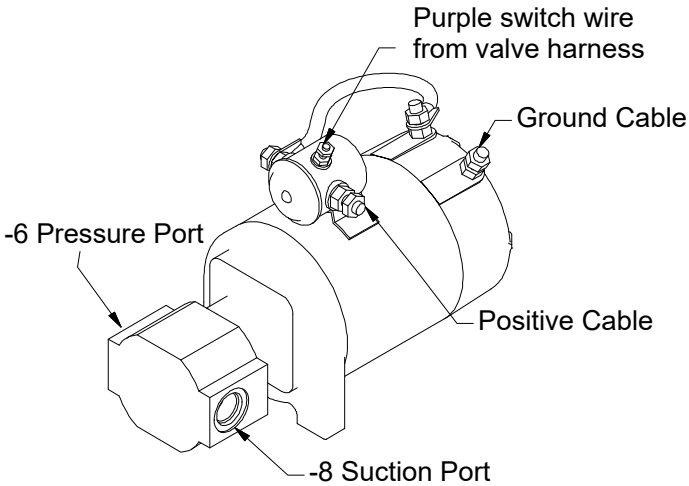

E/H HEAVY DUTY 12V

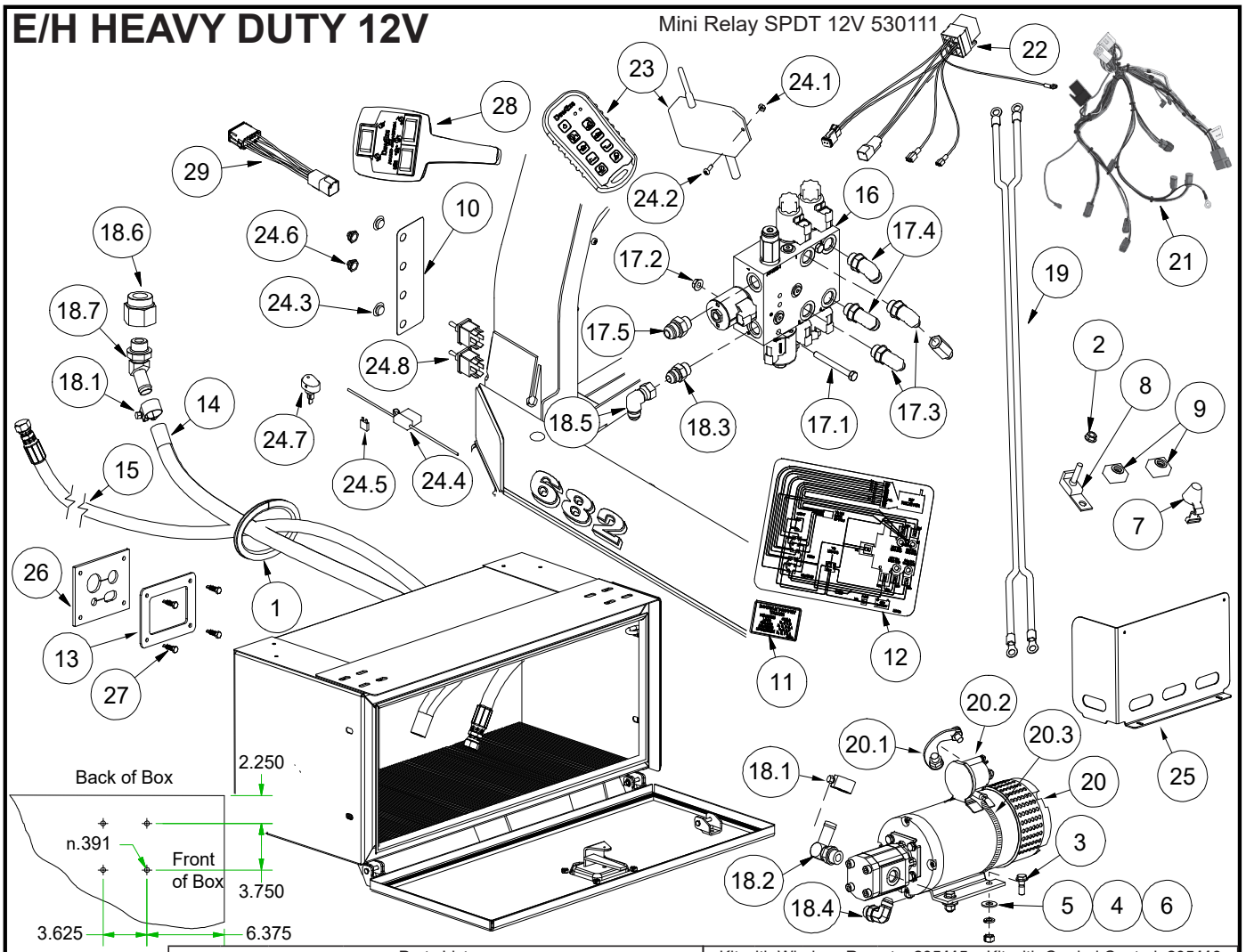

Parts List:				Kit with Wireless Remote: **205115** Kit with Corded Control: **205116**			
ITEM	QTY	Part #	DESCRIPTION	ITEM	QTY	Part #	DESCRIPTION
	21in	100365	Edge Trim	18.4	1	120288	Adapter, 8mj-8mb90
2	1	110141	Nut, M8 X 1.25 Wiz Flange	18.5	1	120368	Adapter, 8mj-8fjx90
3	4	110440	Bolt, 3/8-16 X 1, Wiz Flange	18.6	1	120544	Adapter, 20mb-12for
4	4	110672	Washer, 3/8" Lock	18.7	1	120545	Adapter, 12bh-12mb 45°
5	4	110676	Washer, 3/8" Flat Standard	19	1	230155	Battery Cable, 2ga Twin Lead, 186"
6	4	110826	Nut, 3/8-16 Gr 5	20	1	230159	E/H Motor Pump/Unit, Heavy Duty 12v
7	1	132092	Fuse Cover, Buss Cfcover-1r	20.1	1	232102	Strap, Motor-Solenoid Connecting
8	1	132093	Fuse Holder, Buss Cfbar1-M8xsp	20.2	1	232103	Solenoid, 4 Post, 12VDC Contactor
9	2	132094	Fuse 200 Amp, Buss Mrbf-200	20.3	1	940028	Clamp, Hose, 6”
10	1	202003	Decal, Switch Identification	21	1	232098	Harness,Double Poppet Deutsch
11	1	202052	Decal, Double Poppet Valve	22	1	232115	Harness, Flatbed Valve, E/H Control
12	1	202053	Decal, Wiring Diagram, Deutsch	23	1	233003	Transmitter & Receiver, Kar-Tech
13	1	211849	Access Cover Frame	24	1	235021	Kit, Misc., Valve Control, Flatbed
14	1	220603	Hose, Suction, .75 X 54	24.1	3	110119	Nut, 10-24 Lock
15	1	220738	Hose, Pressure Hd E/H	24.2	3	110264	Bolt, 10-24 X .5 Stainless, Phillips
16	1	223044	Flatbed Valve, Small, Monoblock Ver Ii	24.3	2	110753	Plug, 1/2" Button Plastic
17	1	225013	Adapter Kit, Hydra Force, Flatbed	24.4	1	132001	Fuse Holder, Atc, 14 Ga., Mini
17.1	2	110538	Bolt, 5/16-18 X 3.0	24.5	1	132002	Fuse, Mini 30 Amp
17.2	2	110606	Nut, 5/16-18 Wiz Flange	24.6	2	132035	Switch Boot
17.3	2	120134	Adapter, 6mj-8mb90	24.7	1	132044	Switch, Spst, Rocker Led
17.4	2	120288	Adapter, 8mj-8mb90	24.8	2	132127	Switch, Toggle, Dpdt, (On)-Off-(On)
17.5	1	120493	Adapter, 10mj-8mb	25	1	260400	Shield, Hd, E/H
18	1	225017	Adapter Kit, Hd E/H, Flatbed	26	1	260401	Access Cover, Hd E/H
18.1	2	112136	Clamp, 3/4" T-Bolt, Supra W2-120	27	4	710586	Screw, 1/4 X 1 Tek Self-Tap
18.2	1	120184	Adapter, 12bh-10mb90	28	1	150044	Hand Control & Cable Assy, 2 Bank
18.3	1	120277	Adapter, 8mj-8mb	29	1	232105	Harness, Adapter 2 Bank, Hand Control

E/H HD DEUTCH (ALL CONTROL)

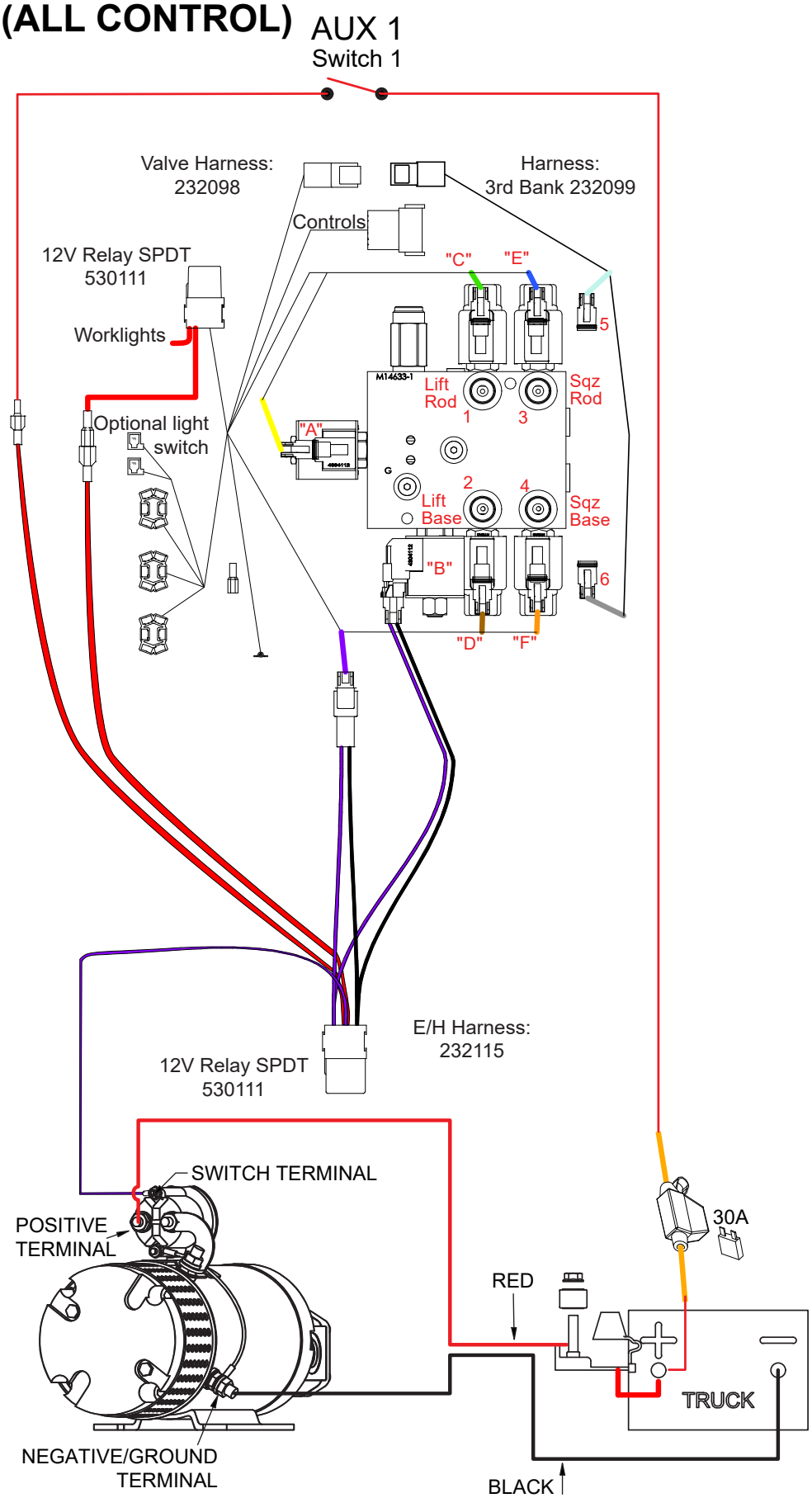

E/H HD SPADE (CORDED)

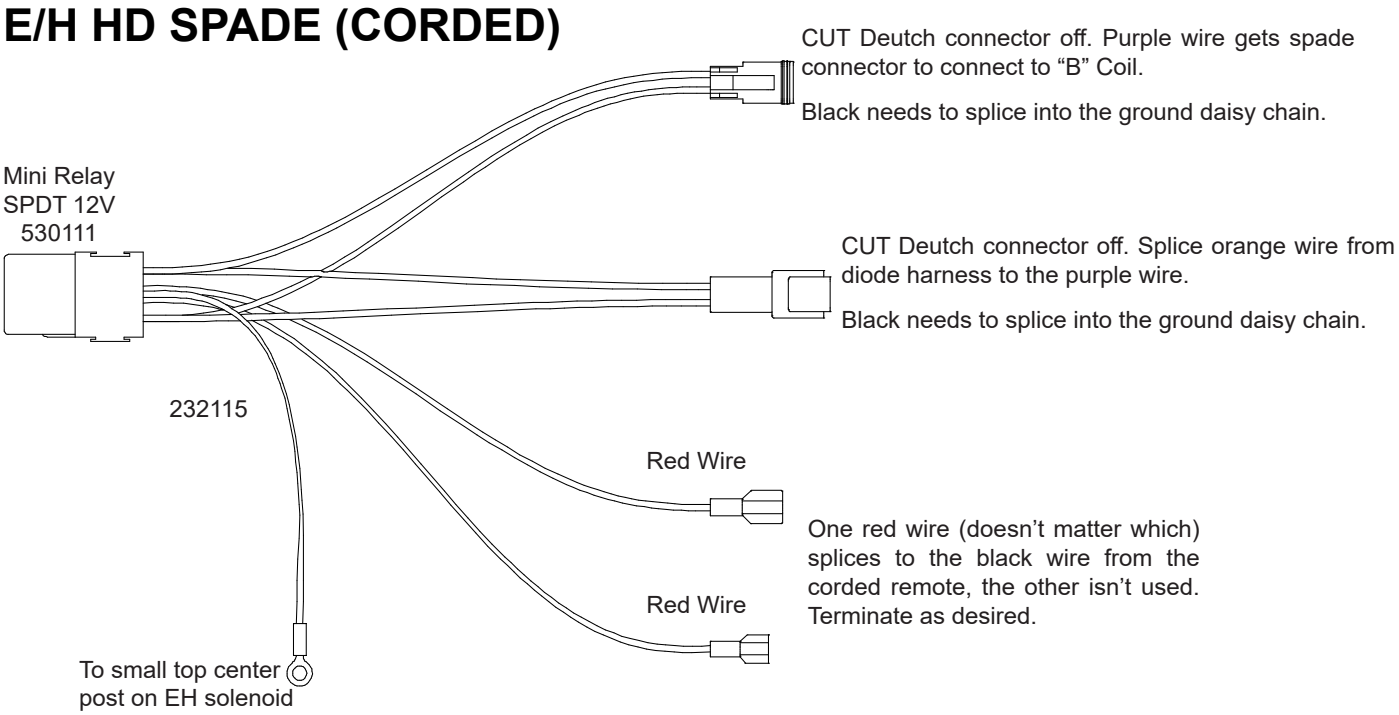

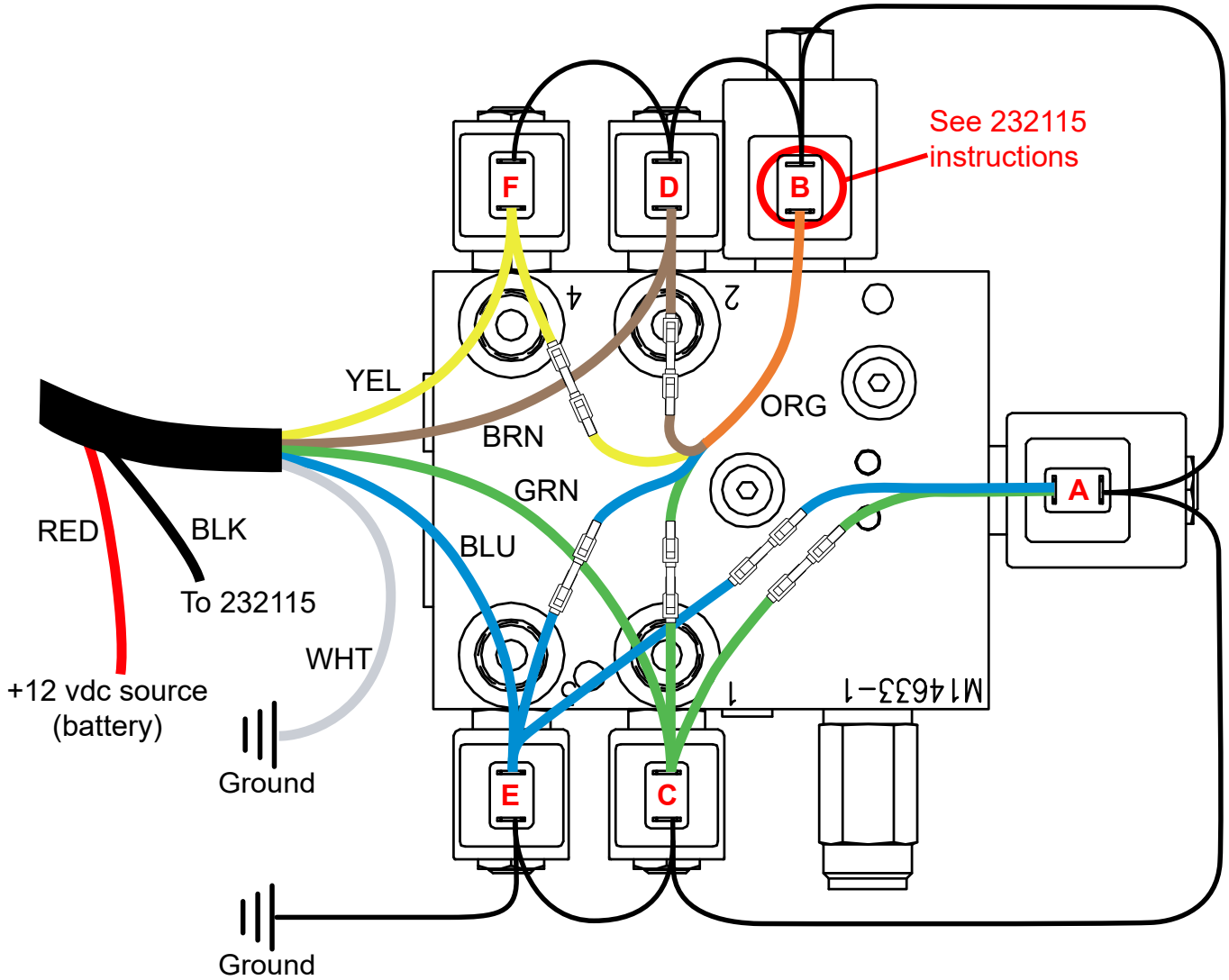

E/H HD SPADE (WIRELESS)

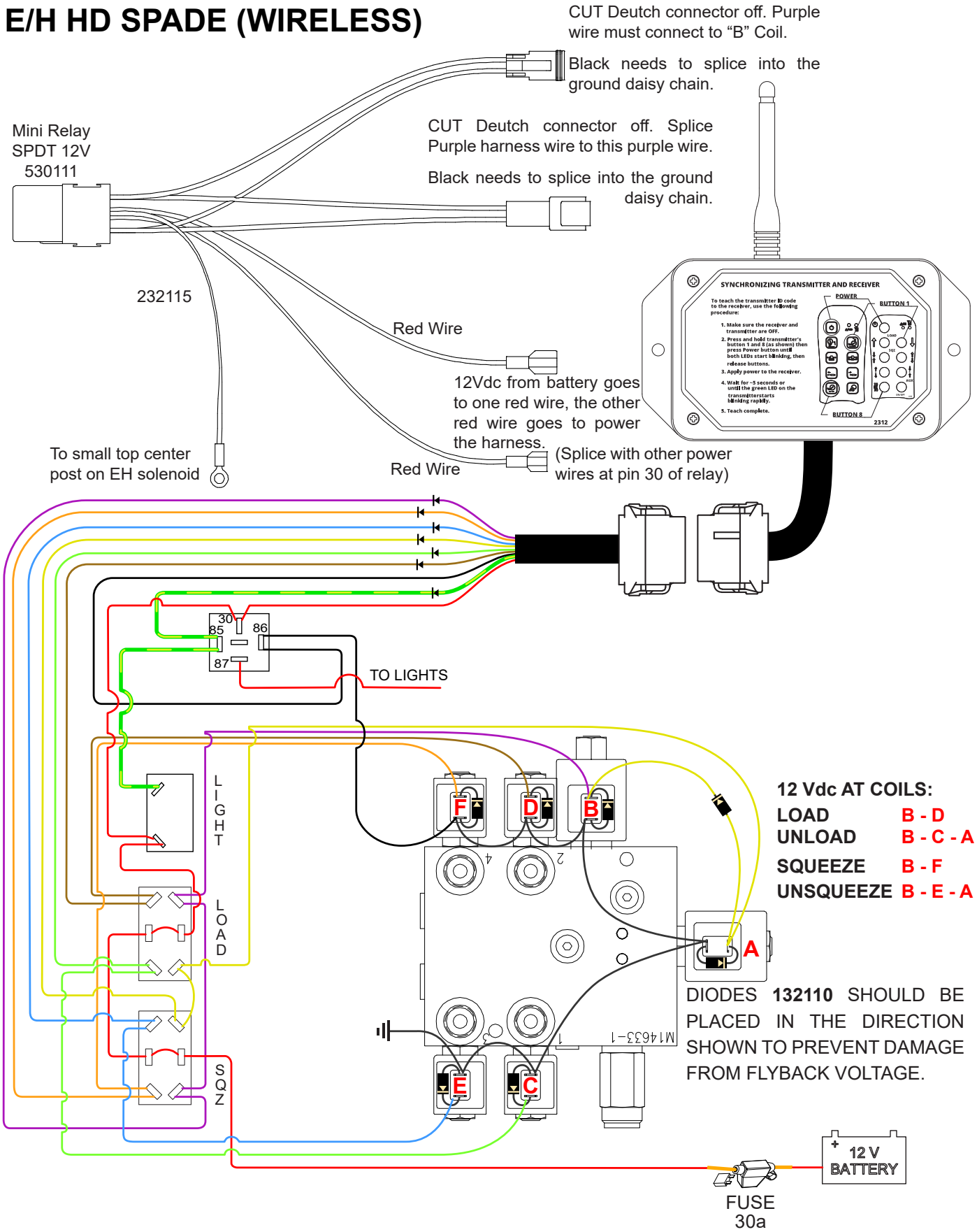

DEWEZE E/H KIT - 30" TOOLBOX MODIFICATION

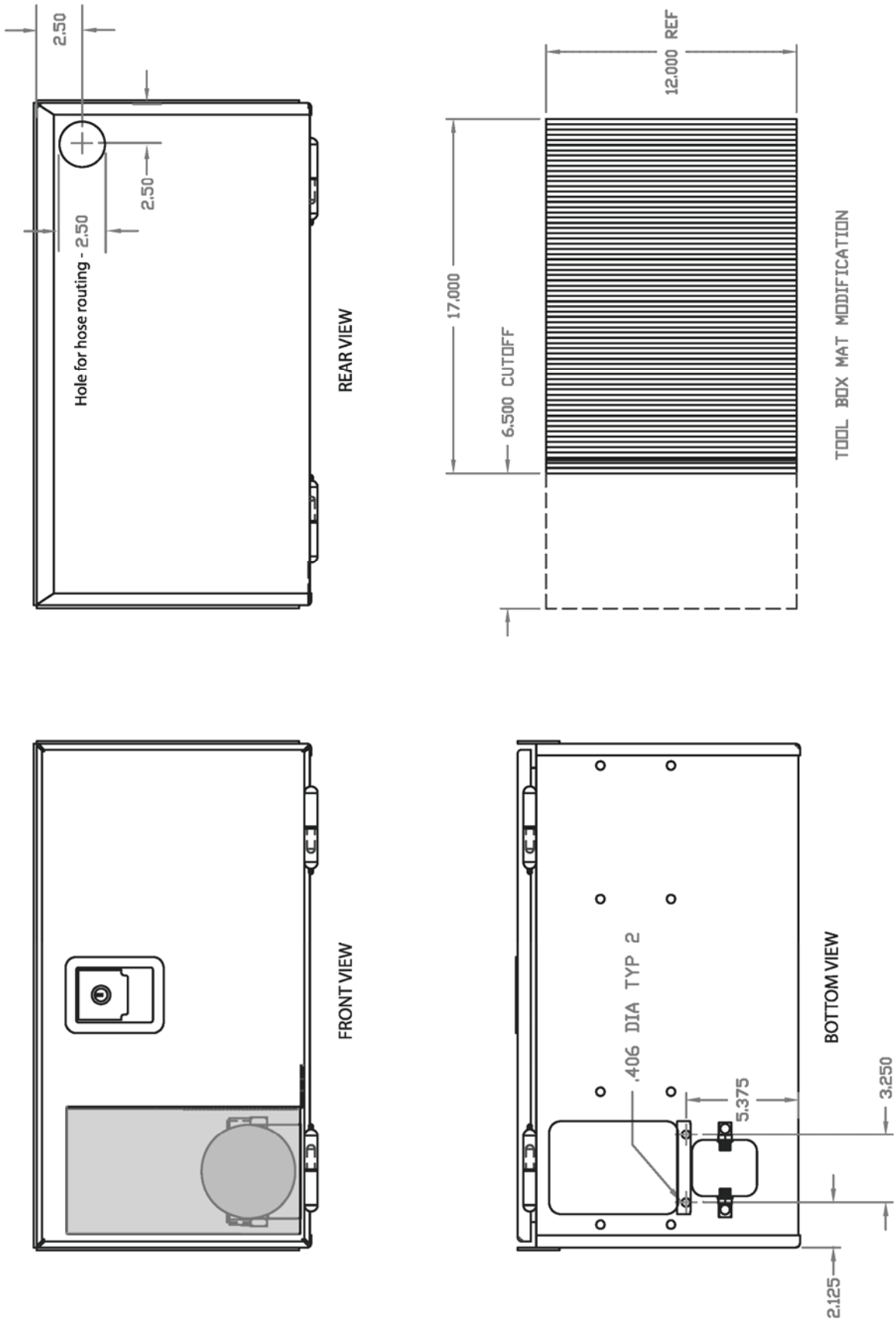

REV:

FRONT SKIRT TOOLBOX REPLACEMENT

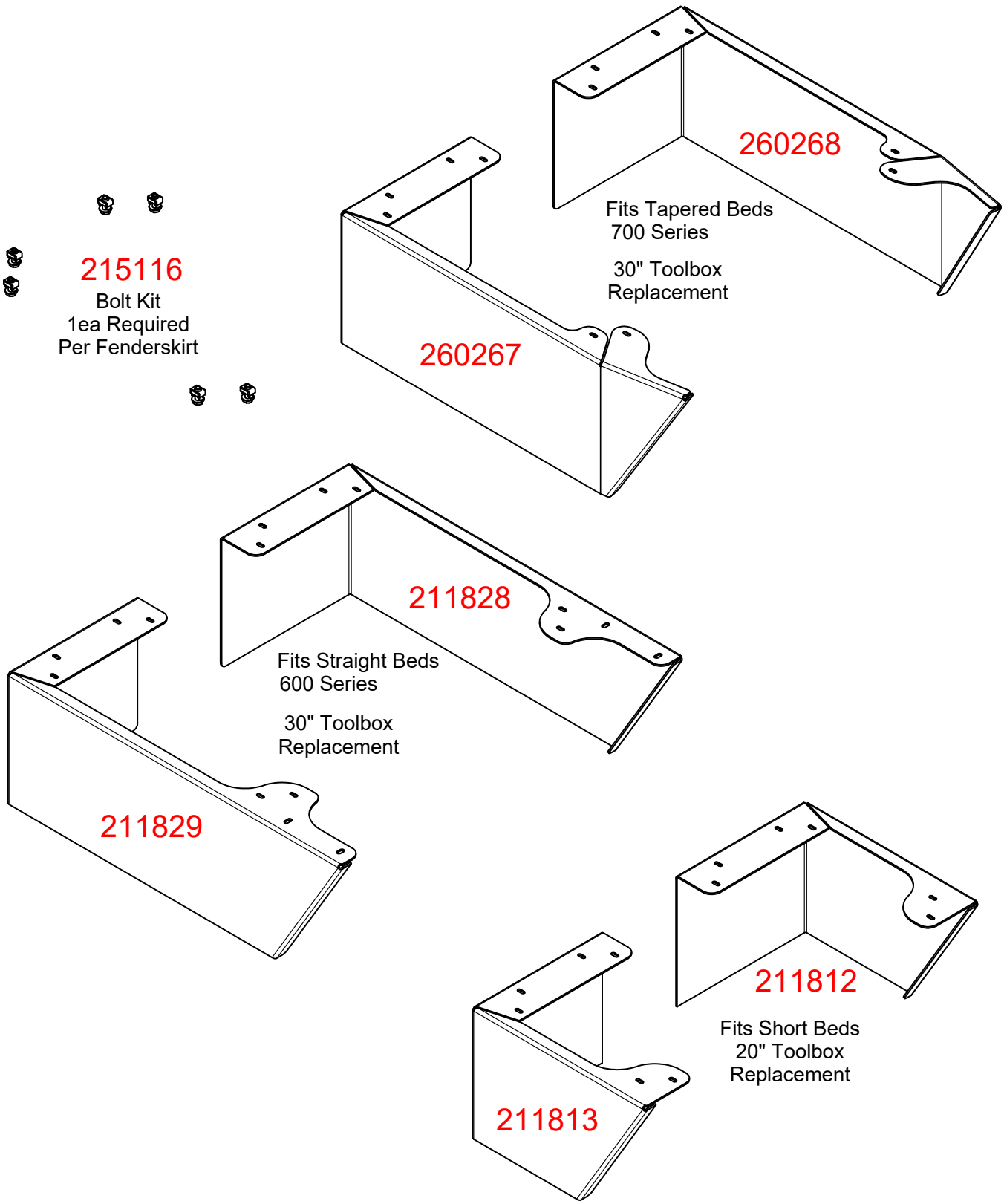

TOOLBOX 30” & FENDER SKIRTS

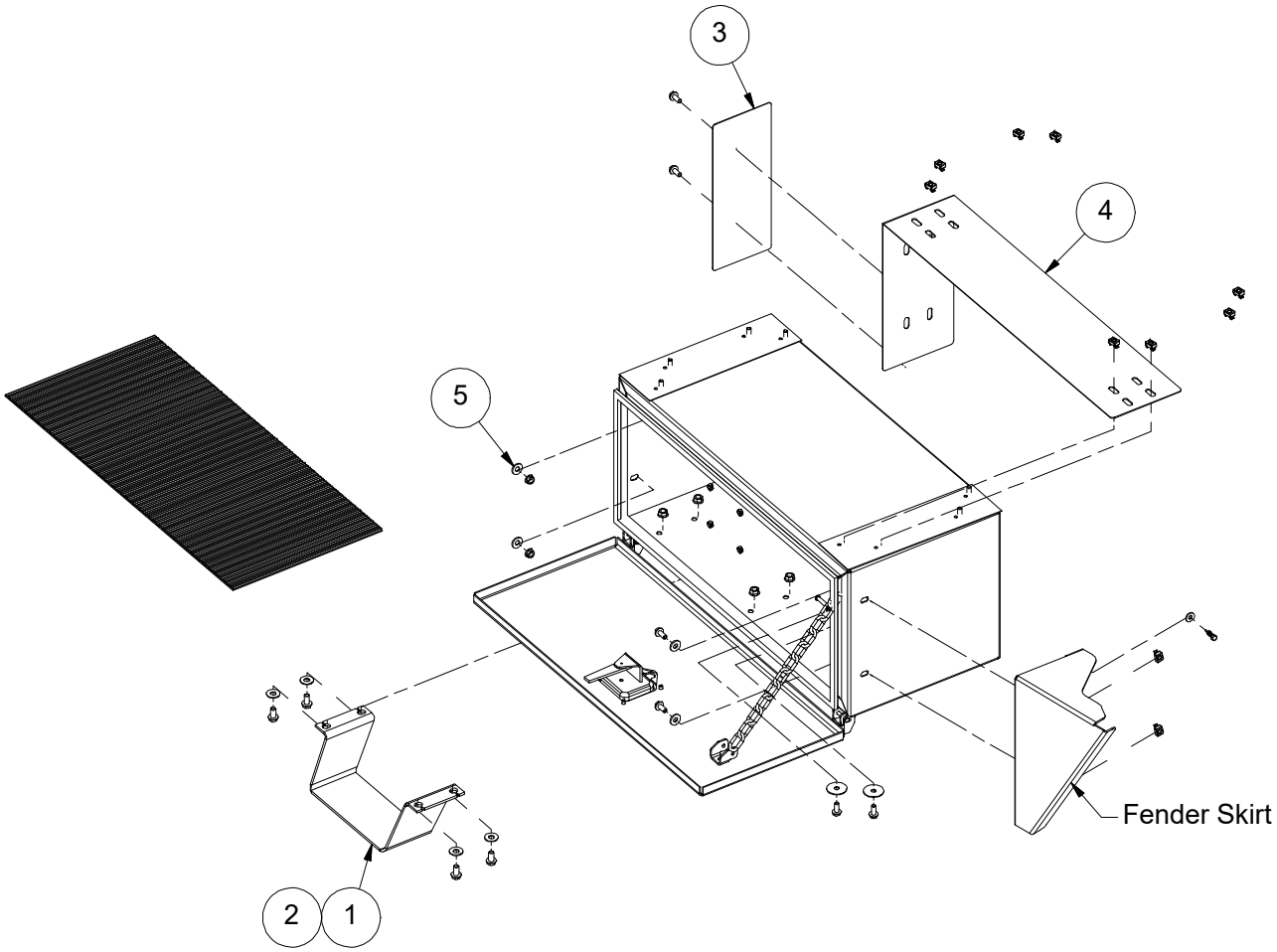

FENDER SKIRTS		KIT	LEFT	RIGHT
600	SHORT	205070	260269	260270
	LONG	205072	260273	260274
700	SHORT	205071	260271	260272
	LONG	205073	260275	260276

SERVICE PARTS		
QTY	PART #	DESCRIPTION
4	110174	NUT, 1/4-20 LOCK 2-WAY
3	112011	PUSH NUT, WASHER CAP STYLE
3	112095	CLEVIS PIN, STD ZP 1/4 X 1 5/8
1	202010	SEAL, TOOLBOX LID (TRIM-LOK X-2897)
1	211119	TOOL BOX MAT
2	212003	Gasket, Toolbox Mount use DK111 Foam
1	212017	Latch, Toolbox w/Studs, Key & Gasket
1	212015	Gasket, Toolbox Latch
1	212016	Key, Toolbox Latch
1	205014	Door, Toolbox, Service Part

30” TOOLBOX W/STEP 205011			
ITEM	QTY	PART #	DESCRIPTION
1	1	211109	Step, Toolbox
2	1	215474	Traction Pad, 3/4"
3	1	202001	Decal, Chip Guard
4	1	211684	Shield, Top & Side
5	1	205012	Bolt Package
	10	110258	Nut, 5/16-18, Cage Tinnerman
	12	110444	Bolt, 5/16-18 X 0.75, Wiz Flange
	4	110437	Bolt, 3/8-16 X 0.75, Wiz Flange
	4	110645	Nut, 3/8-16 Wiz Flange
	4	110676	Washer, 3/8" Flat Standard
	2	110606	Nut, 5/16-18 Wiz Flange
	4	110665	Washer, 5/16" Flat Standard
	8	110049	Washer, 5/16" X 1 1/2 Fender

REV:

TOOLBOX 20”

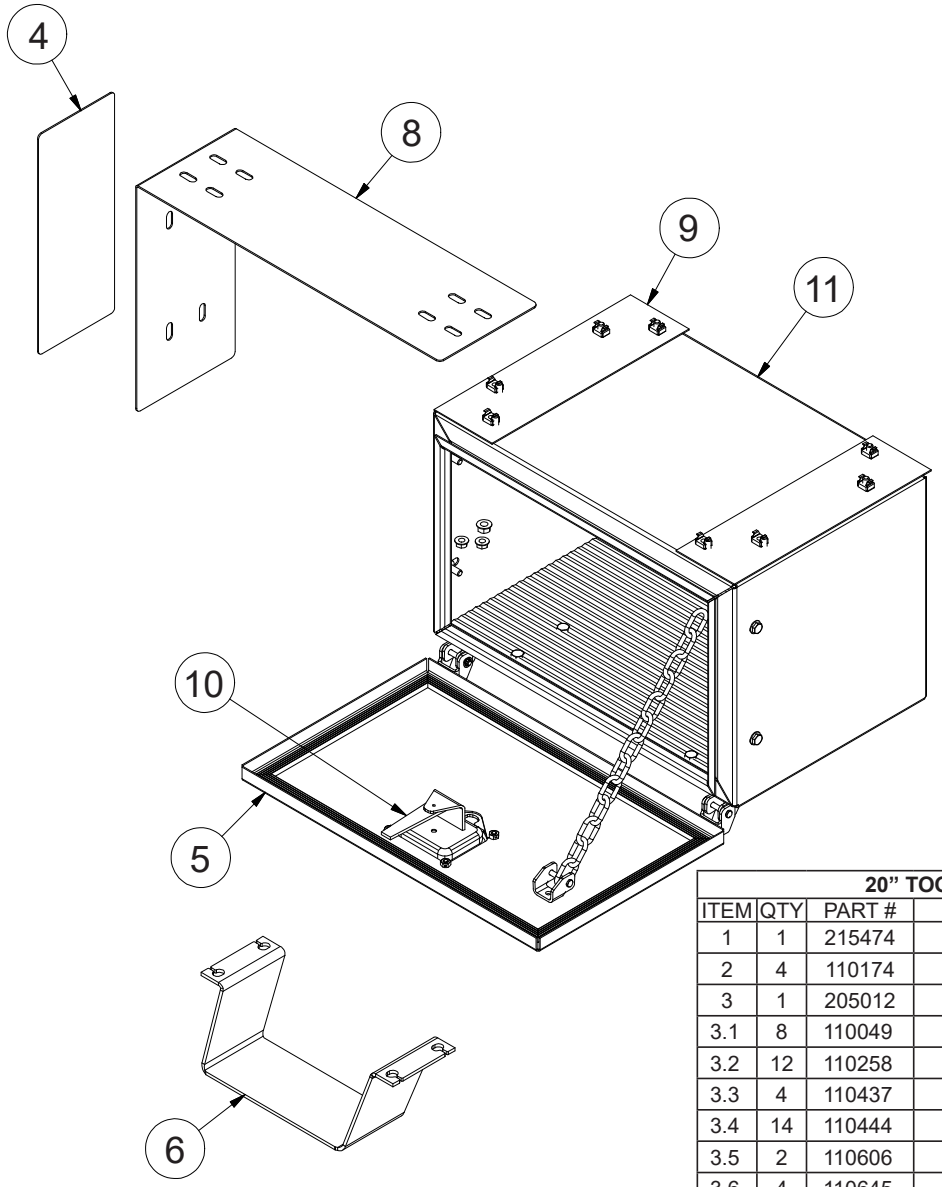

20” TOOLBOX W/STEP 205030			
ITEM	QTY	PART #	DESCRIPTION
1	1	215474	Traction Pad, 3/4”
2	4	110174	Nut, 1/4-20 Lock 2-Way
3	1	205012	Bolt Package
3.1	8	110049	Washer, 5/16 X 1.50 Fender
3.2	12	110258	Nut, 5/16-18, Cage Tinnerman
3.3	4	110437	Bolt, 3/8-16 X 0.75, Wiz Flange
3.4	14	110444	Bolt, 5/16-18 X 0.75, Wiz Flange
3.5	2	110606	Nut, 5/16-18 Wiz Flange
3.6	4	110645	Nut, 3/8-16 Wiz Flange
3.7	4	110665	Washer, 5/16" Flat Standard
3.8	4	110676	Washer, 3/8" Flat Standard
4	1	202001	Decal, Chip Guard
5	1	205489	Toolbox Lid 20"
5.1	3	112011	Push Nut, Washer Cap Style
5.2	3	112095	Clevis Pin, Std Zp 1/4 X 1 5/8
5.3	1	202010	Seal, Toolbox Lid (Trim-Lok X-2897)
5.4	1	215133	Toolbox Door & Hinge 20"
5.5	2	270139	Toolbox Door Hinge, Inner Half
6	1	211109	Step, Toolbox
7	1	211248	Toolbox Mat 20"
8	1	211593	Toolbox Chip Guard 20"
9	2	212003	Gasket, Toolbox Mount
10	1	212017	Latch, Toolbox W/Studs, Key & Gasket
10.1	1	212015	Gasket, Toolbox Latch

TOOLBOX 17” LEFT

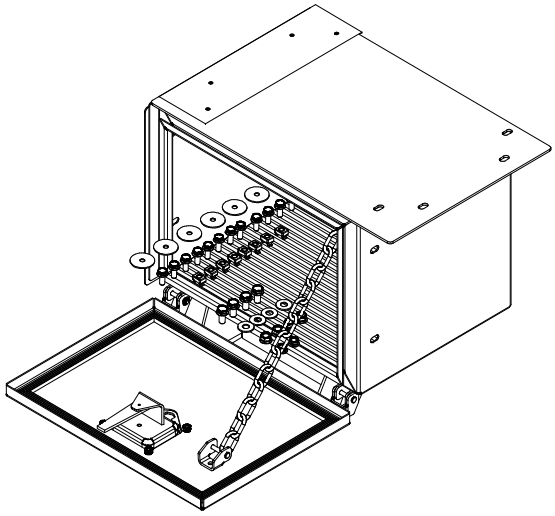

17” TOOLBOX W/STEP LEFT: 205139			
ITEM	QTY	PART #	DESCRIPTION
1	4	110174	Nut, 1/4-20 Lock 2-Way
2	3	112011	Push Nut, Washer Cap Style
3	3	112095	Clevis Pin, Std Zp 1/4 X 1 5/8
4	1	202001	Decal, Chip Guard
5	1	202010	Seal, Toolbox Lid (Trim-Lok X-2897)
6	1	205012	Bolt Package
	8	110049	Washer, 5/16 X 1.50 Fender
	12	110258	Nut, 5/16-18, Cage Tinnerman
	4	110437	Bolt, 3/8-16 X 0.75, Wiz Flange
	14	110444	Bolt, 5/16-18 X 0.75, Wiz Flange
	2	110606	Nut, 5/16-18 Wiz Flange
	4	110645	Nut, 3/8-16 Wiz Flange
	4	110665	Washer, 5/16" Flat Standard
	4	110676	Washer, 3/8" Flat Standard
7	1	211109	Step, Toolbox
	1	215474	Traction Pad, 3/4"
8	1	212003	Gasket, Toolbox Mount
9	1	212017	Latch, Toolbox W/Studs, Key & Gasket
	1	212015	Gasket, Toolbox Latch
10	1	215213	Weldment, Toolbox Door & Hinge, 17"
11	1	260719	Toolbox Mat, 17"

TOOLBOX 17” RIGHT

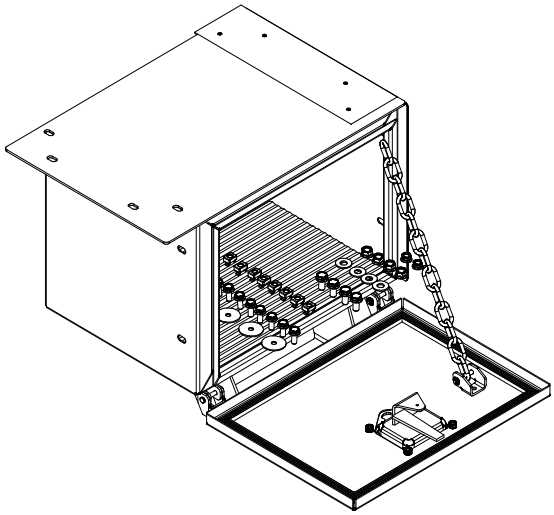

17” TOOLBOX W/STEP RIGHT: 205138			
ITEM	QTY	PART #	DESCRIPTION
1	4	110174	Nut, 1/4-20 Lock 2-Way
2	3	112011	Push Nut, Washer Cap Style
3	3	112095	Clevis Pin, Std Zp 1/4 X 1 5/8
4	1	202001	Decal, Chip Guard
5	1	202010	Seal, Toolbox Lid (Trim-Lok X-2897)
6	1	205012	Bolt Package
	8	110049	Washer, 5/16 X 1.50 Fender
	12	110258	Nut, 5/16-18, Cage Tinnerman
	4	110437	Bolt, 3/8-16 X 0.75, Wiz Flange
	14	110444	Bolt, 5/16-18 X 0.75, Wiz Flange
	2	110606	Nut, 5/16-18 Wiz Flange
	4	110645	Nut, 3/8-16 Wiz Flange
	4	110665	Washer, 5/16" Flat Standard
	4	110676	Washer, 3/8" Flat Standard
7	1	211109	Step, Toolbox
	1	215474	Traction Pad, 3/4"
8	1	212003	Gasket, Toolbox Mount
9	1	212017	Latch, Toolbox W/Studs, Key & Gasket
	1	212015	Gasket, Toolbox Latch
10	1	215213	Toolbox Door & Hinge, 17"
11	1	260719	Toolbox Mat, 17"

TOOLBOX 12” LEFT

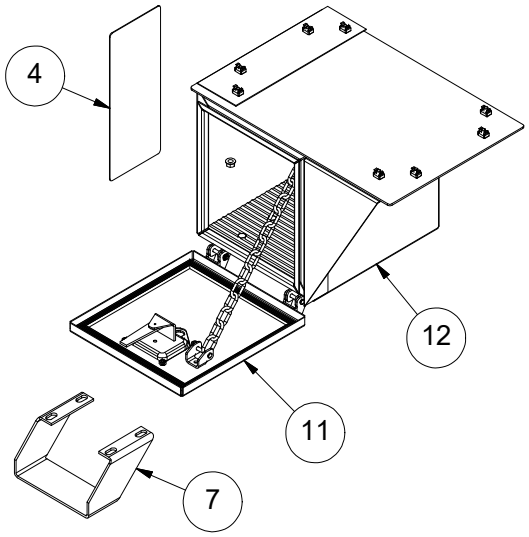

12” TOOLBOX W/STEP LEFT: 205033			
ITEM	QTY	PART #	DESCRIPTION
1	4	110174	Nut, 1/4-20 Lock 2-Way
2	3	112011	Push Nut, Washer Cap Style
3	3	112095	Clevis Pin, Std Zp 1/4 X 1 5/8
4	1	202001	Decal, Chip Guard
5	1	202010	Seal, Toolbox Lid (Trim-Lok X-2897)
6	1	205012	Bolt Package
	8	110049	Washer, 5/16 X 1.50 Fender
	12	110258	Nut, 5/16-18, Cage Tinnerman
	4	110437	Bolt, 3/8-16 X 0.75, Wiz Flange
	14	110444	Bolt, 5/16-18 X 0.75, Wiz Flange
	2	110606	Nut, 5/16-18 Wiz Flange
	4	110645	Nut, 3/8-16 Wiz Flange
	4	110665	Washer, 5/16" Flat Standard
	4	110676	Washer, 3/8" Flat Standard
7	1	210697	Step Tool Box
	6"	100449	Traction Pad, 3/4"
8	1	211871	Toolbox Mat 12"
9	1	212003	Gasket, Toolbox Mount
10	1	212017	Latch, Toolbox W/Studs, Key & Gasket
	1	212015	Gasket, Toolbox Latch
11	1	215136	Toolbox Door & Hinge Weldment 12"

TOOLBOX 12” RIGHT

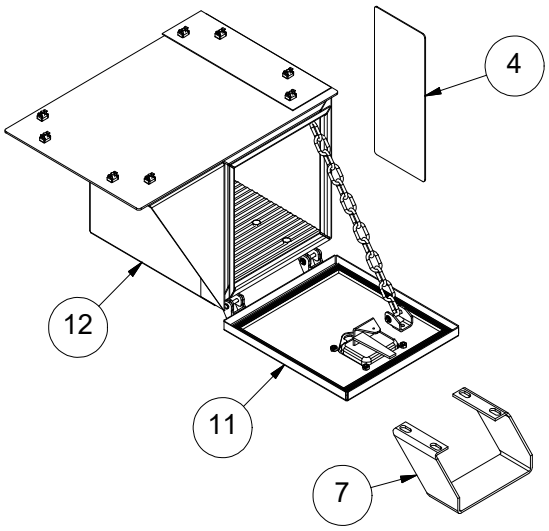

12” TOOLBOX W/STEP RIGHT: 205032			
ITEM	QTY	PART #	DESCRIPTION
1	4	110174	Nut, 1/4-20 Lock 2-Way
2	3	112011	Push Nut, Washer Cap Style
3	3	112095	Clevis Pin, Std Zp 1/4 X 1 5/8
4	1	202001	Decal, Chip Guard
5	1	202010	Seal, Toolbox Lid (Trim-Lok X-2897)
6	1	205012	Bolt Package
	8	110049	Washer, 5/16 X 1.50 Fender
	12	110258	Nut, 5/16-18, Cage Tinnerman
	4	110437	Bolt, 3/8-16 X 0.75, Wiz Flange
	14	110444	Bolt, 5/16-18 X 0.75, Wiz Flange
	2	110606	Nut, 5/16-18 Wiz Flange
	4	110645	Nut, 3/8-16 Wiz Flange
	4	110665	Washer, 5/16" Flat Standard
	4	110676	Washer, 3/8" Flat Standard
7	1	210697	Step Tool Box
	6"	100449	Traction Pad
8	1	211871	Toolbox Mat 12"
9	1	212003	Gasket, Toolbox Mount
10	1	212017	Latch, Toolbox W/Studs, Key & Gasket
	1	212015	Gasket, Toolbox Latch
11	1	215136	Toolbox Door & Hinge Weldment 12"

TOOLBOX 770 LEFT

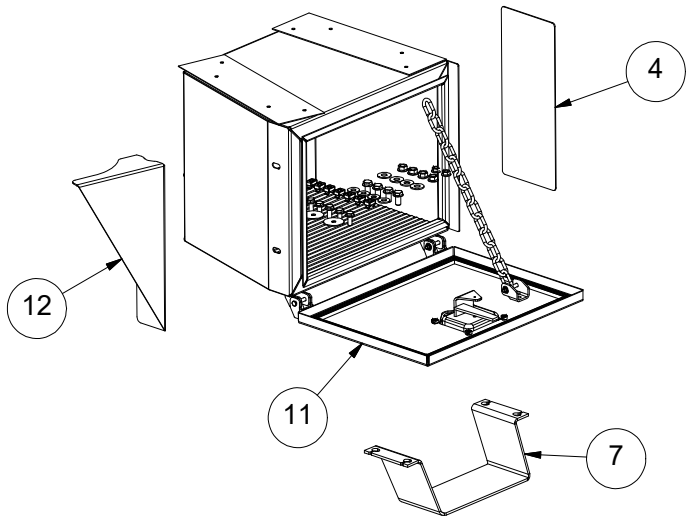

770 TOOLBOX W/STEP LEFT: 205045			
ITEM	QTY	PART #	DESCRIPTION
1	4	110174	Nut, 1/4-20 Lock 2-Way
2	3	112011	Push Nut, Washer Cap Style
3	3	112095	Clevis Pin, Std Zp 1/4 X 1 5/8
4	1	202001	Decal, Chip Guard
5	1	202010	Seal, Toolbox Lid (Trim-Lok X-2897)
6	1	205012	Bolt Package
	8	110049	Washer, 5/16 X 1.50 Fender
	12	110258	Nut, 5/16-18, Cage Tinnerman
	4	110437	Bolt, 3/8-16 X 0.75, Wiz Flange
	14	110444	Bolt, 5/16-18 X 0.75, Wiz Flange
	2	110606	Nut, 5/16-18 Wiz Flange
	4	110645	Nut, 3/8-16 Wiz Flange
	4	110665	Washer, 5/16" Flat Standard
	4	110676	Washer, 3/8" Flat Standard
7	1	211109	Step, Toolbox
	1	215474	Traction Pad, 3/4"
8	2	212003	Gasket, Toolbox Mount
9	1	212017	Latch, Toolbox W/Studs, Key & Gasket
	1	212015	Gasket, Toolbox Latch
11	1	215213	Weldment, Toolbox Door & Hinge, 17"
12	1	260204	Toolbox Skirt, 770, Right
13	1	260206	Toolbox Mat 770, Right

TOOLBOX 770 RIGHT

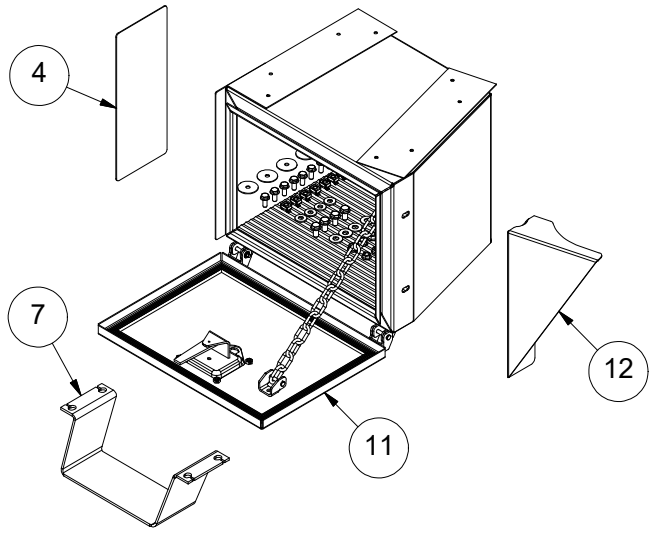

770 TOOLBOX W/STEP RIGHT: 205044			
ITEM	QTY	PART #	DESCRIPTION
1	4	110174	Nut, 1/4-20 Lock 2-Way
2	3	112011	Push Nut, Washer Cap Style
3	3	112095	Clevis Pin, Std Zp 1/4 X 1 5/8
4	1	202001	Decal, Chip Guard
5	1	202010	Seal, Toolbox Lid (Trim-Lok X-2897)
6	1	205012	Bolt Package
	8	110049	Washer, 5/16 X 1.50 Fender
	12	110258	Nut, 5/16-18, Cage Tinnerman
	4	110437	Bolt, 3/8-16 X 0.75, Wiz Flange
	14	110444	Bolt, 5/16-18 X 0.75, Wiz Flange
	2	110606	Nut, 5/16-18 Wiz Flange
	4	110645	Nut, 3/8-16 Wiz Flange
	4	110665	Washer, 5/16" Flat Standard
	4	110676	Washer, 3/8" Flat Standard
7	1	211109	Step, Toolbox
	1	215474	Traction Pad, 3/4"
8	2	212003	Gasket, Toolbox Mount
9	1	212017	Latch, Toolbox W/Studs, Key & Gasket
	1	212015	Gasket, Toolbox Latch
11	1	215213	Weldment, Toolbox Door & Hinge, 17"
12	1	260203	Toolbox Skirt, 770, Left
13	1	260205	Toolbox Mat 770, Left

REV:

TOOLBOX - ACROSS THE BED

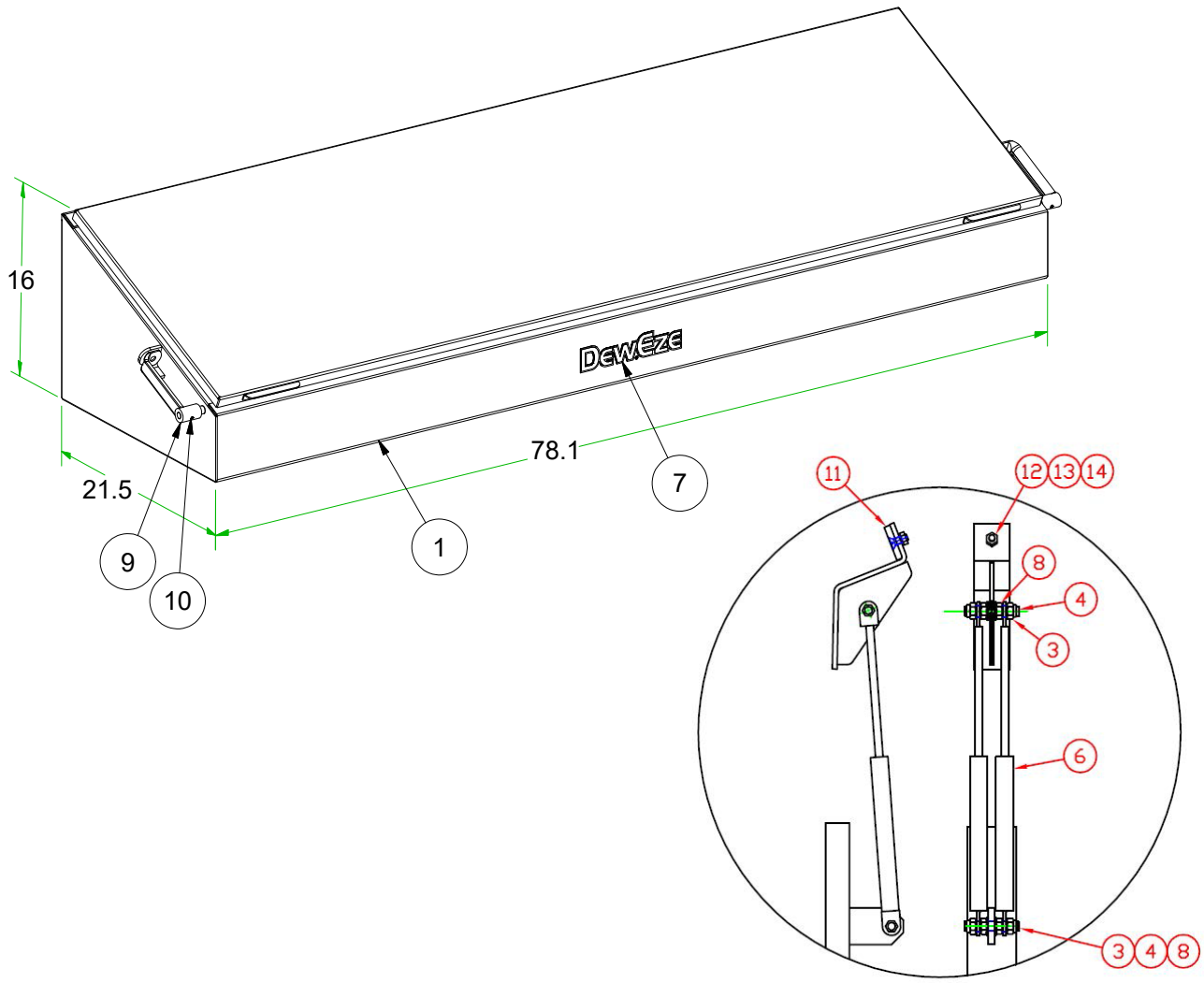

ACROSS-THE-BED TOOLBOX: 210915			
ITEM	QTY	PART #	DESCRIPTION
1	1	210914	Toolbox Weld Assembly
2	2	211132	Bushing, .625 X .5 X .062 Fng
3	4	110618	Nut, 3/8-16 Lock Nylon Insert
4	1	210908	All Thread
5	2	211134	Spring/Latch
6	2	500078	Shock, Gas Filled
7	1	400010	Decal, Deweze Black Outline
8	4	110645	Nut, 3/8-16 Wiz Flange
9	1	211143	Handle Weld Assy
10	2	110239	Setscrew, 5/16-18 X 0.3125
11	1	211138	Wear Pad, Plastic Toolbox
12	1	110238	1/4-20 X .75 Flat C'sunk Screw
13	1	110667	Washer, 1/4" Lock
14	1	110609	Nut, 1/4-20

DECALS

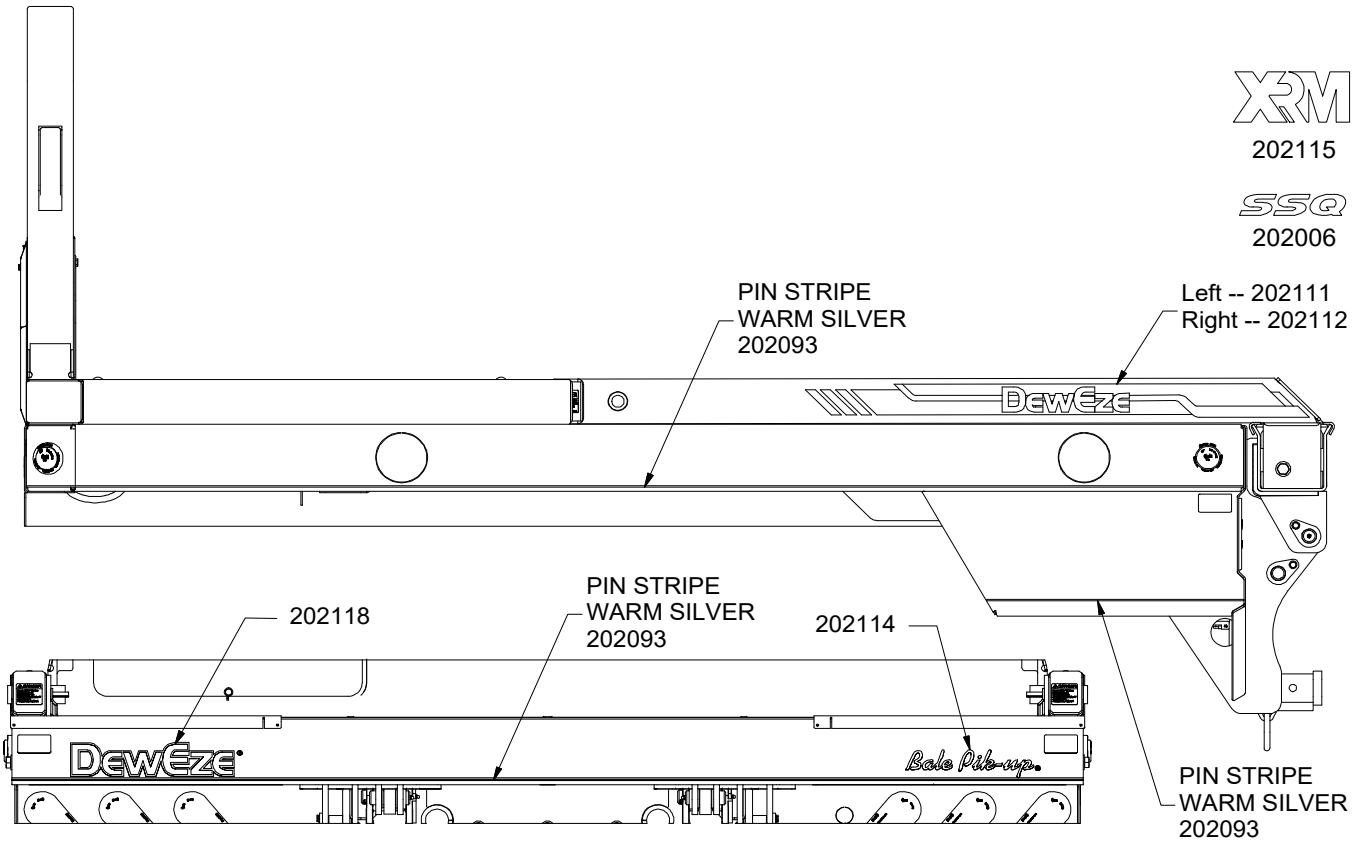

MODEL # DECALS		
L & R	PART#	QTY
670	202094	2
671	202129	2
675	202095	2
676	202096	2
677	202097	2
679	202098	2
682	202099	2
684	202100	2
687	202101	2
688	202102	2
770	202103	2
778	202105	2
776	202104	2
782	202106	2
784	202107	2
787	202108	2
788	202109	2

PARTS LIST		KIT: 205133
PART #	QTY	DESCRIPTION
200010	4	Decal, Danger Red On White
202114	1	Decal, Bale Pik-up Script, Warm Silver
200144	2	Decal, Danger Vertical
202118	1	Decal, Deweze Outline, Warm Silver
200190	6	Decal, Red Reflector, Rectangle
202093	34ft.	Decal, Pin Stripe, Warm Silver
202111	1	Decal, Squeeze Arm, Left
202112	1	Decal, Squeeze Arm, Right
400014	2	Decal, Shield Removed

DECALS SAFETY & OPERATION

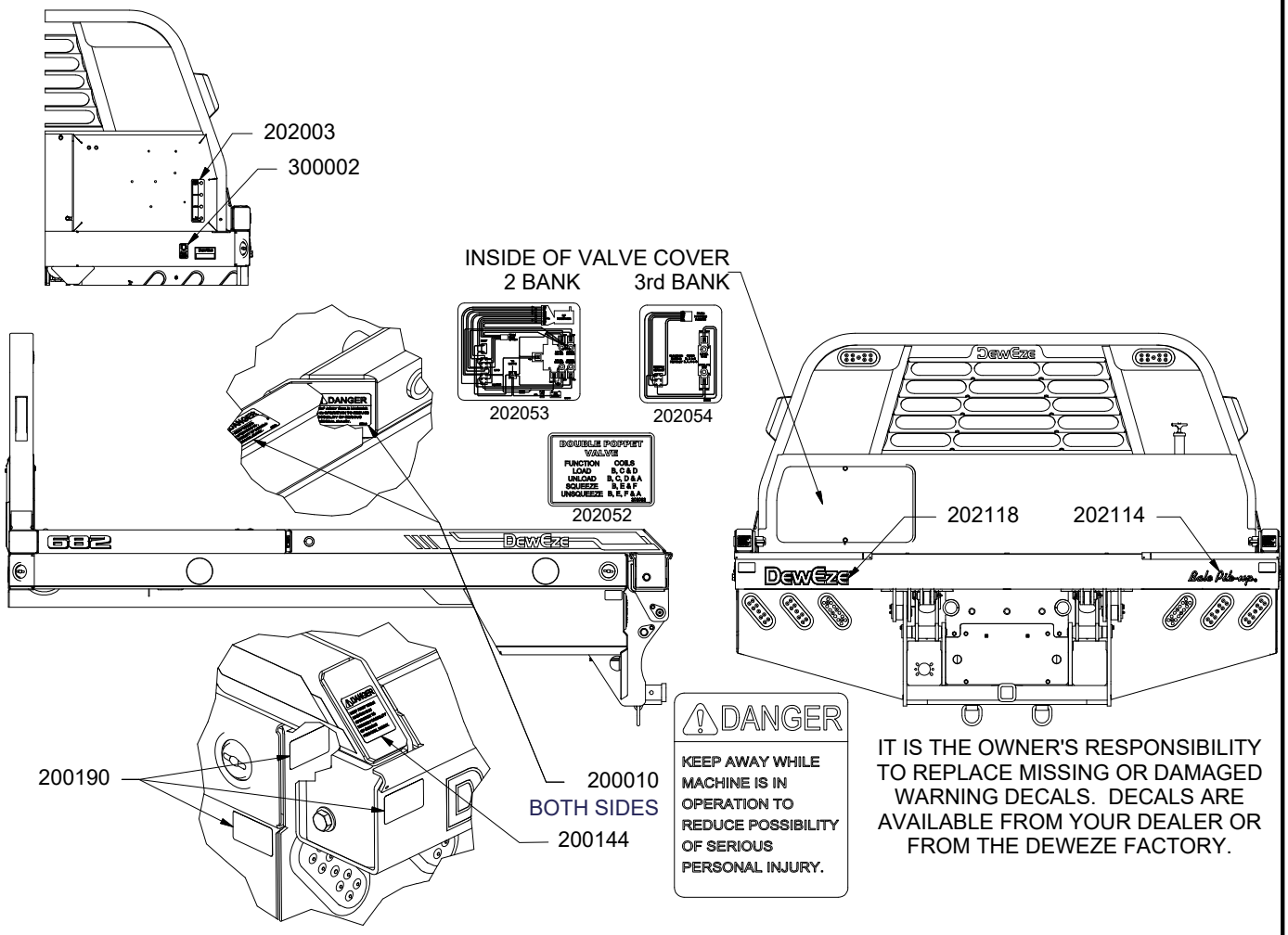

DANGER

KEEP AWAY WHILE MACHINE IS IN OPERATION TO REDUCE POSSIBILITY OF SERIOUS PERSONAL INJURY.

IT IS THE OWNER'S RESPONSIBILITY TO REPLACE MISSING OR DAMAGED WARNING DECALS. DECALS ARE AVAILABLE FROM YOUR DEALER OR FROM THE DEWEZE FACTORY.

PARTS LIST		
PART #	QTY	DESCRIPTION
200010	4	Danger Decal, Horizontal
202114	1	Bale Pik-Up, Script, Warm Silver
200144	2	Danger Decal, Vertical
202118	1	Deweze, Outline, Warm Silver
200190	6	Reflective Decal
202003	1	Decal, Switch Identification
202052	1	Decal, Double Poppet Valve
202053	1	Decal, Wiring Diagram, Kar-Tech Remote
202054	1	Decal, 3rd Bank Option, Kar-Tech Remote
300002	1	Fema Decal

REAR VIEW CAMERA MOUNTING KITS *

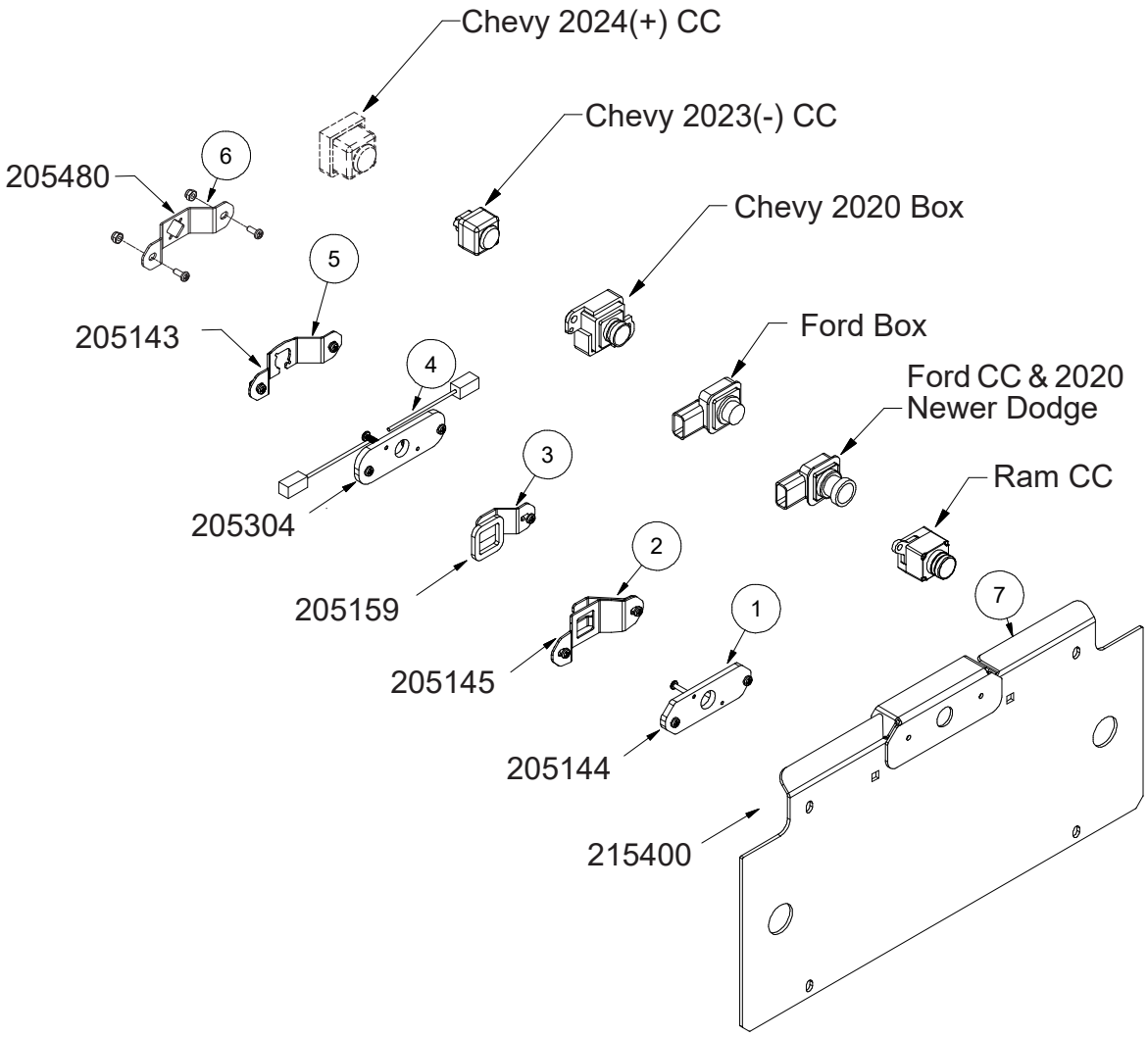

***Mount Disclaimer:** These mounting kits were designed for the most common mounting-to-camera. Manufacturers change camera styles & mountings even within the same year. Use best practices to modify if need be.

***Installer note:** DewEze does not engineer wiring nor harnesses for the camera. It is the installers' responsibility to trace the OEM cable to re-attach.

Item	Qty	Part #	DESCRIPTION
1	1	205144	Dodge/Ram CC Camera Mount Kit
2	1	205145	Ford Camera & Dodge 2020+ Mount Kit
3	1	205159	Ford Box Take-Off Camera Mount Kit
4	1	205304	Chevy/ GM 2020 Box Take-Off Camera Mount Kit
5	1	205143	Chevy/GM CC 2023- Camera Mount Kit
6	1	205480	Chevy/GM CC 2024+ Camera Mount Kit
7	1	215400	Camera Mount Weldment

BED MOUNTING KITS *

***Installer note:** Kits were designed to match specific bed styles to a model of OEM truck. Use best practices & measurements for fitment, or choose the Yellow Bag generic kit.

MAKE	PART #	YEAR	DESCRIPTION
FORD	205036	1998-2011	Ford Box Delete “Super Duty” 670, 675, 770, 778
	205041	Pre-1997	Ford Box Delete “Non Super Duty" 670, 675, 770, 778
	205064	2012-2016	Ford Box Delete 670, 675, 770, 778
	205084	1998-2016	Ford Box Delete 676, 776
	205112	2017+	Ford Box Delete 671, 676, 776
	205037	1998-2010	Ford CC 677, 682, 687, 782, 787
	205040	2011-2016	Ford CC 677, 682, 687, 782, 787
	205078	1999-2016	Ford CC 679, 684, 784
	205080	1999-2016	Ford CC 688, 788
	205081	2011+	Ford CC 687, 787
	205111	2017+	Ford CC 679, 684, 784
	205149	2017+	Ford CC 688, 788
CHEVY/GM	205038	2000-2010	Chevy Box Delete 670, 675, 770, 778
	205049	2011-2019	Chevy Box Delete 675 & 778
	205063	2011-2019	Chevy Box Delete 670 & 770
	205085	2011-2019	Chevy Box Delete 676, 776
	205086	2000-2010	Chevy Box Delete 676, 776
	205303	2020+	Chevy Box Delete, 671, 676, 776
	205046	2011+	Chevy CC 682 & 782
	205047	2011+	Chevy CC 684, 784
	205051	2000-2010	Chevy CC 682, 782
	205052	PRE 2010	Chevy CC 687 & 787
	205069	2011+	Chevy CC 688, 788
	205281	2019+	Chevy (4500-5500) CC 684, 784
	205424	2019+	Chevy (4500-6500) CC 688, 788
DODGE/ RAM	205054	1994-2002	Dodge Box Delete 670, 770
	205082	2003-2013	Dodge Box Delete 676, 776
	205087	2014+	Dodge (2500) Box Delete 676, 776
	205089	1994-2002	Dodge Box Delete 676, 776
	205093	2014-2018	Dodge Box Delete 670, 770
	205121	2014-2018	Dodge (3500) Box Delete 676, 776
	205173	2019+	Dodge (3500) Box Delete 676, 776
	205185	2019+	Dodge Box Delete 670, 770
	205469	2003-2013	Dodge Box Delete 670, 770
	205039	2007+	Dodge CC 679, 684, 784
	205059	2003-2013	Dodge CC 675 & 778
	205065	2007+	Dodge CC 688, 788
MISC.	205029	Yellow Bag & Contents (applicable to older truck models not listed above)	

ACCESSORIES

Adapter Assy, 4' Bale, Part# 210933			
ITEM	QTY	PART #	DESCRIPTION
1	2	210929	4' BALE ADAPTER
2	2	210006	Pin, Lynch 1/4 x 1 1/2

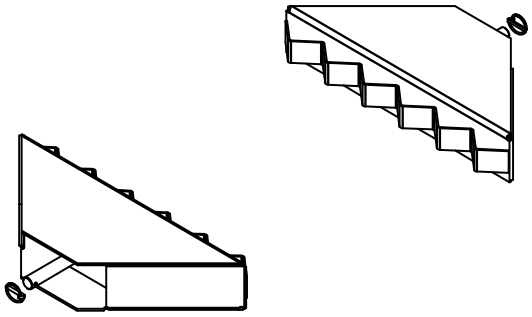

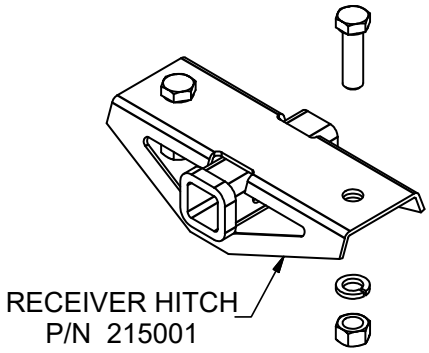

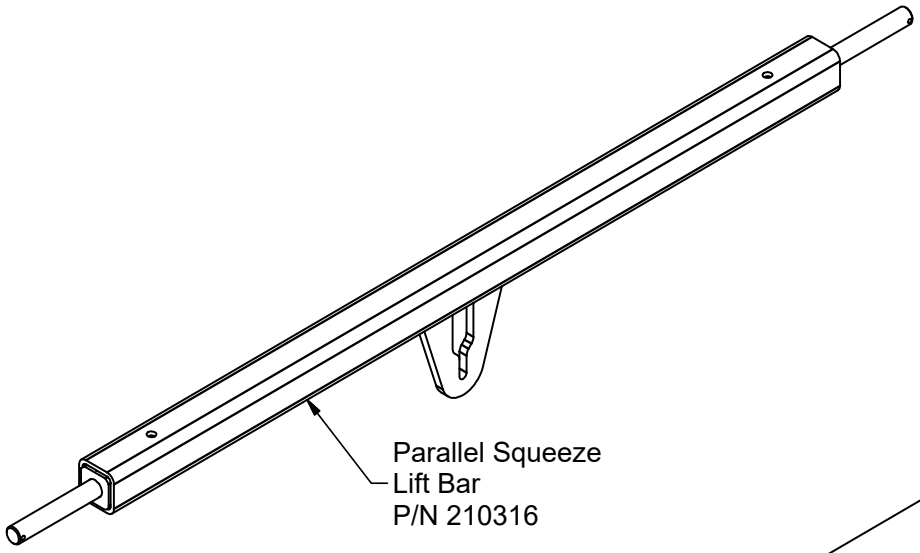

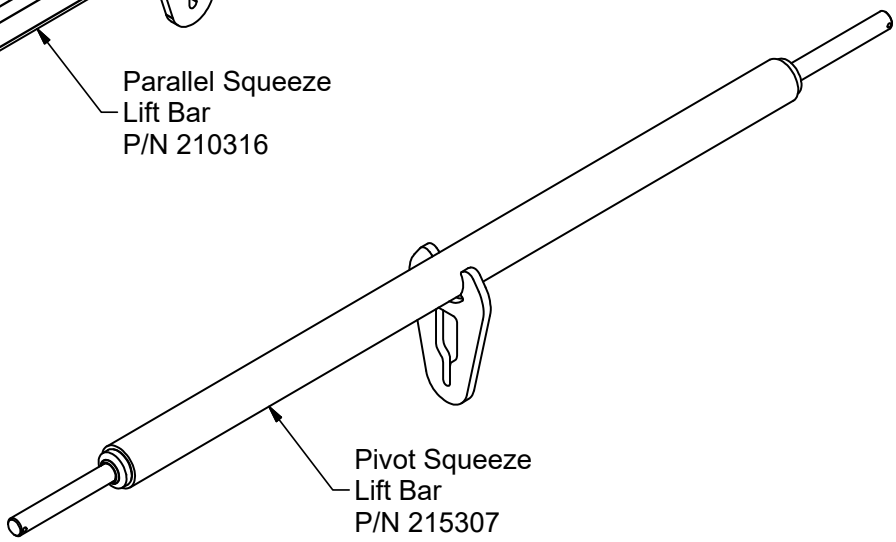

GatorHyde Repair Instructions

Required items:

1 – 25 x 25 ml caulking gun (202030)
1 – 25 x 25 ml cartridge set of GatorHyde Repair Material (202031)
1 – pair of rubber gloves
1 – wooden stick
1 – Instruction sheet and MSDS sheet
1 – MEK – methyl ethyl ketone solvent (available at most hardware stores)
1 – small paint brush
2 – plastic cups

SAFETY WARNING!
Read the Master Safety Data Sheets (MSDS) on all chemicals before handling any chemical.
See: http://www.msds.com

Note:

This repair is designed to easily fix small, damaged areas fast and with limited amount of effort. However this product is fast reacting so make sure to thoroughly read this instruction sheet before proceeding with repairs.

Application Instruction:

Step 1. Before you start, put on rubber gloves and safety glasses.

Step 2. Place a piece of cardboard or newspaper next to the repair area prior to opening and mixing the material.

Step 3. Cut back damaged area with a razor knife to make a square.

Step 4. Sand area and feather edges with 40 grit sandpaper. Blow out sanded area to get rid of dust.

Step 5. Clean area well with MEK solvent and allow to dry for 30 minutes.

Step 6. Attach static mixing wand to 25 x 25 ml cartridge set, twist and lock in place. Insert cartridge into caulking gun.

Step 7. Hold the caulking gun in an upright position in one hand, then set the two plastic cups on a flat surface side by side. Next point the static mixing wand into a cup and squeeze the trigger of the gun two times so a small amount of material is discharged into the cup. (Note! This material is to be discarded.) Immediately move the static mixing wand over and point it into the next cup and continue to discharge the remaining amount of material into this cup.

Step 8. Allow the material to set in cup and gently stir with wooden stick for a period of 1 to 1 ½ minutes or until the GatorHyde becomes thicker and will stick to either a finger or wooden stick.

Step 9. Once material has begun to gel, apply enough product to finger or a stick and immediately dab onto damaged area. Use the paint brush to dab the area in a vertical manner to make a textured surface.

Cure time. Allow repaired area to cure for a period of 1 hour prior to heavy impact loading.

Clean-up. In order to clean up the area take a paper sack or plastic trash bag and place all the empty jars and remaining contents of the repair kit and dispose into a standard trash can or simply put everything back in the box and throw away.

GatorHyde Protective Coatings, Inc., 2210 South Highway 69, Wagoner, OK 74467 * (918) 485-2835 *
www.gatorhyde.com

SYNCHRONIZING TRANSMITTER AND RECEIVER

To teach the transmitter ID code to the receiver, use the following procedure:

1. Make sure the receiver and transmitter are OFF.
2. Press and hold transmitter's button 1 and 8 (as shown) then press Power button until both LEDs start blinking, then release buttons.
3. Apply power to the receiver.
4. Wait for ~5 seconds or until the green LED on the transmitter starts blinking rapidly.
5. Teach complete.

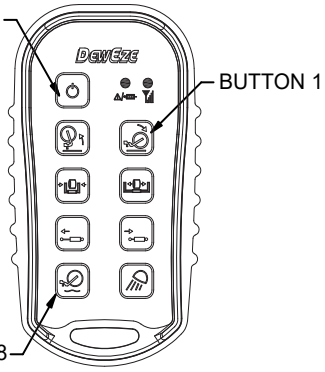

TRANSMITTER ERROR CODE CHART

ERROR CODE	PROBABLE CAUSE
1	LOW BATTERY
2	FAULTY CIRCUIT TO OUTPUT A
3	FAULTY CIRCUIT TO OUTPUT B
4	FAULTY CIRCUIT TO OUTPUT C
5	FAULTY CIRCUIT TO OUTPUT D
6	FAULTY CIRCUIT TO OUTPUT E
7	FAULTY CIRCUIT TO OUTPUT F
8	FAULTY CIRCUIT TO OUTPUT G
9	FAULTY CIRCUIT TO OUTPUTH
10	FAULTY CIRCUIT TO LIGHT OUTPUT

ERROR CODE IS THE NUMBER OF RED BLINKS BETWEEN EVERY PAUSE.

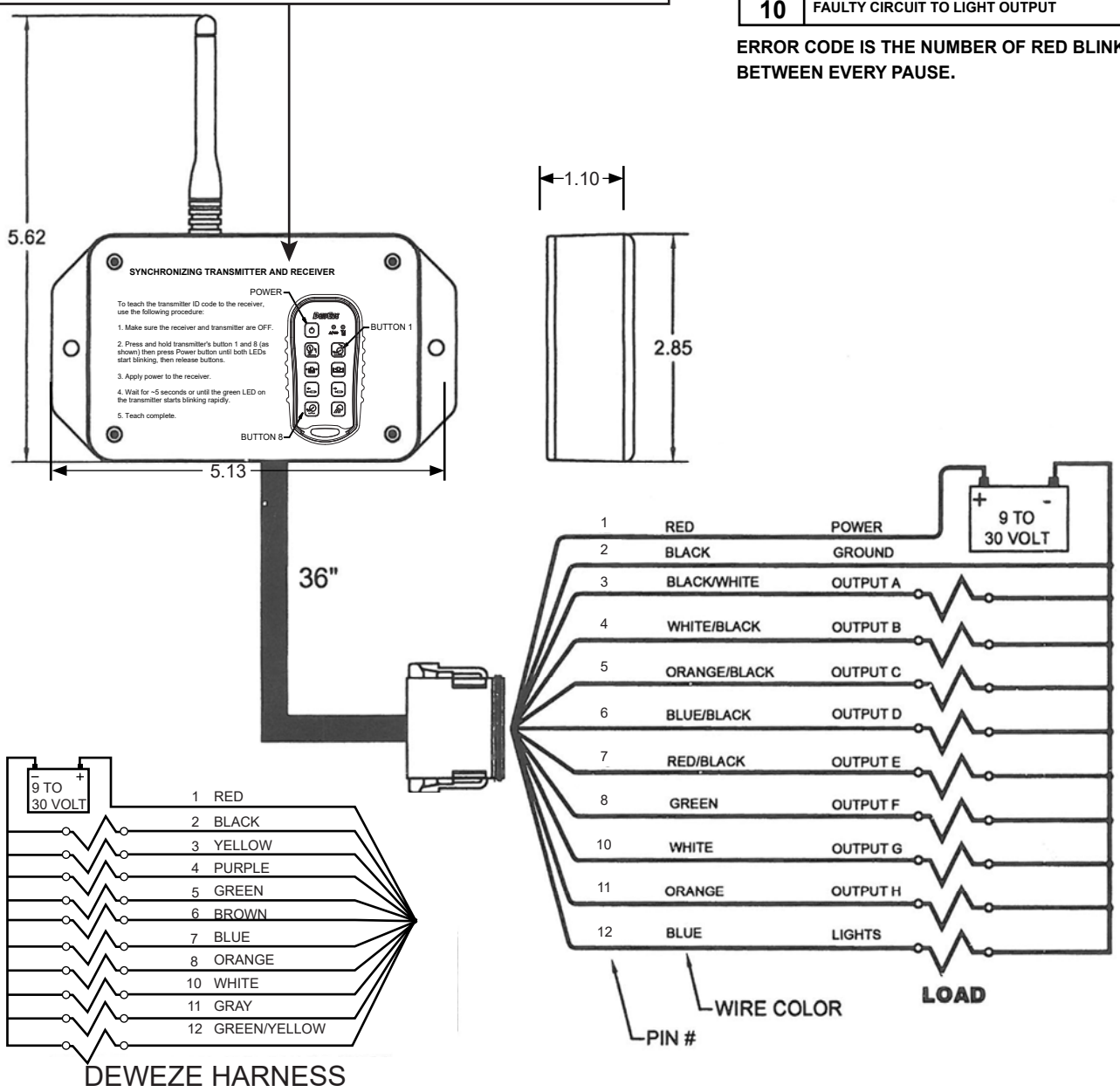

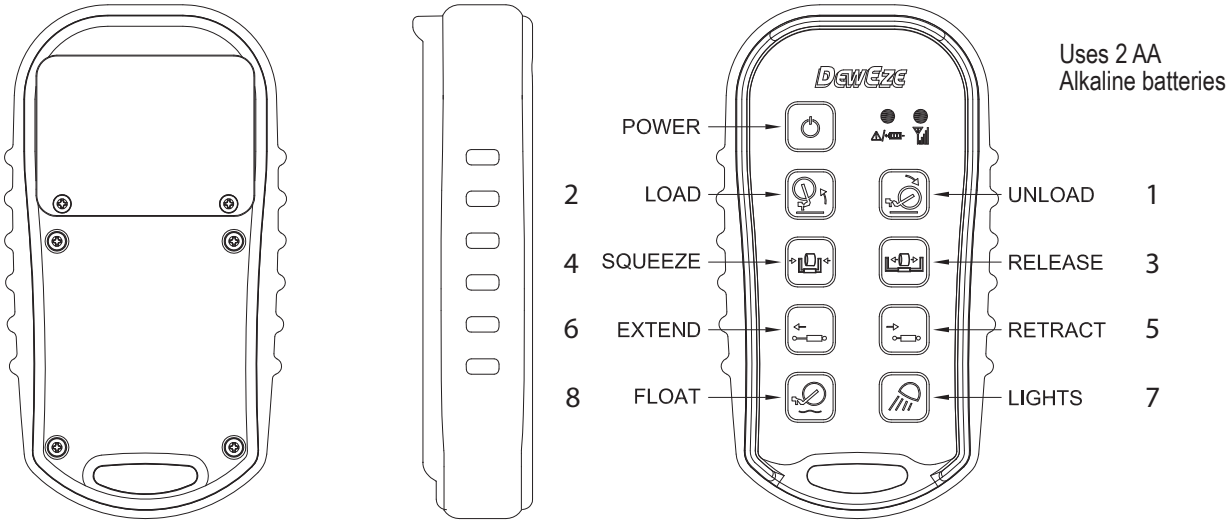

SYSTEM OPERATION:
Press and hold the power button on the transmitter until both LEDs turn on, then release. The green LED will flash rapidly when communication has been established. When the receiver is off, the red LED will flash slowly indicating this. With the receiver on, press the corresponding buttons on the tranmitter keypad to turn on and off each of the outputs.

INDICATOR LIGHTS:
The transmitter has two LED indicators, the red BATTERY/DIAGNOSTIC indicator and the green TRANSMIT indicator.
The green TRANSMIT indicator flashes rapidly whenever there is communication between the transmitter and the receiver.
The red BATTERY/DIAGNOSTIC indicator blinks once per second when the battery voltage is low. It also blinks when there is a problem with the system in the form of an error code. Refer to the ERROR CODE CHART tables for more information.
Note: To check for low battery, turn the receiver off and leave the transmitter on. If the transmitter red LED continues to blink, the battery is low. If the red LED blinks only when the receiver is ON, count the number of blinks and refer to the ERROR CODE CHART.

SLEEP TIME:
The transmitter is factory set to turn off (sleep) after 15 minutes. Use the following procedure to change the time before sleep mode.

1. Press and hold 3 (UNSQEEZE), 4 (SQUEEZE), 8 (FLOAT) and POWER
2. Release the buttons and both lights should blink once per second.
3. Choose one of the following buttons:
    a. 1 (UNLOAD) = 15 min
    b. 2 (LOAD) = 30 min
    c. 3 (UNSQUEEZE) = 1 hr
    d. 4 (SQUEEZE) = 2 hr
    e. 8 (FLOAT) = sleep disabled.

PROGRAMMING OUTPUTS:
The Kar-Tech transmitter can be programmed for different machines. Follow steps to ensure correct mode is enabled.

BALE BED

1. Ensure transmitter and receiver are in sync
2. Turn OFF receiver and turn transmitter ON
3. Press and hold buttons 1 (UNLOAD), 4 (SQUEEZE), & 8 (FLOAT). Red LED will start blinking.
4. Turn ON receiver
5. Hold and release button 2 (LOAD).
6. Hold and release POWER button to save and exit the config mode.

SPECIFICATIONS:
RF Transmit power (EIRP): 10 mW
RF Frequency: 902-928 MHz
Operating temperature - Radio: -40C to +85C
Battery life (min): 30 hours continuous.
Vibration: 3G to 200Hz
Outputs: 5A max each (20A system max)

Standard E/H Power Kit

E / H KIT INSTALLATION INSTRUCTIONS

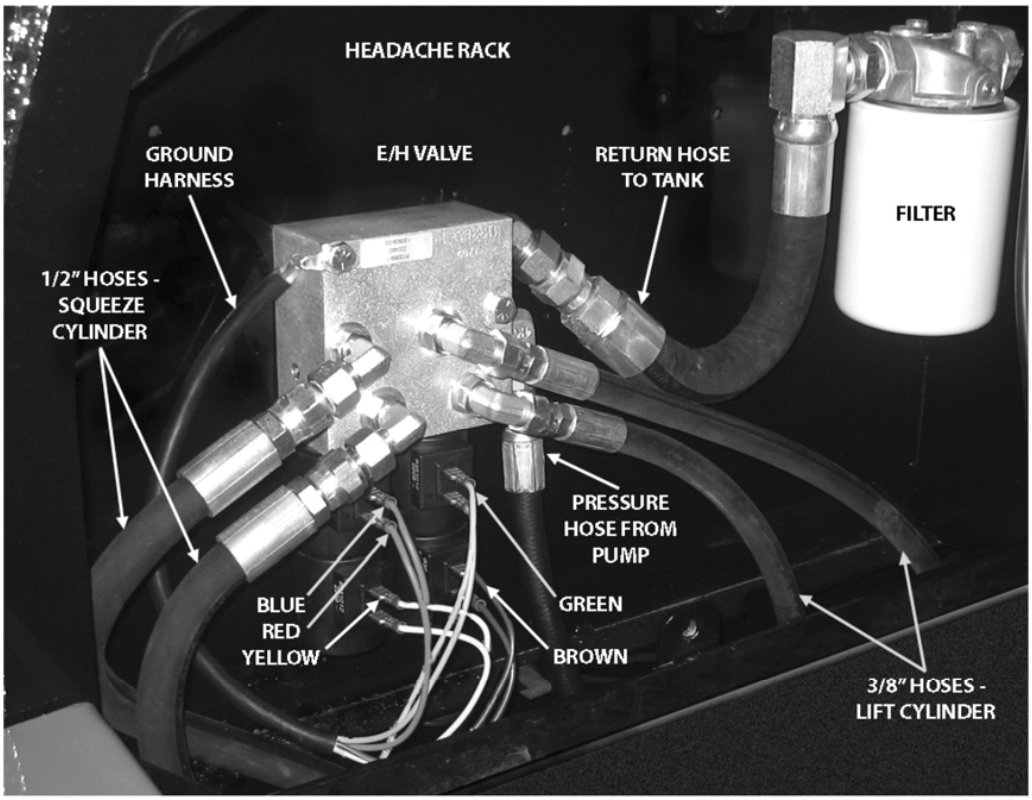

1) Attach adapters to E/H valve and install inside cavity on headache rack.

2) Attach return hose to valve and filter housing. Attach pressure hose from pump.

3) Attach blue and yellow wires from hand control to valve cartridge that controls squeeze cylinder as indicated.

4) Attach green and brown wires from hand control to valve cartridge that controls lift cylinder as indicated.

5) Attach ground harness to valve coils with similar color wires (yellow, brown and green). Blue and red wires are on same coil.

6) Attach 1/2" hoses from squeeze cylinder to side of valve controlled by blue and yellow wires. If hand control does not respond as desired, pioneer couples on rear of bed may be reversed or blue and yellow wires may be reversed.

7) Attach 3/8" hoses from lift cylinder side of valve controlled by green and brown wires. If hand control does not respond as desired, green and brown wires may be reversed.

8) Use diagram to locate holes in driver's side toolbox.

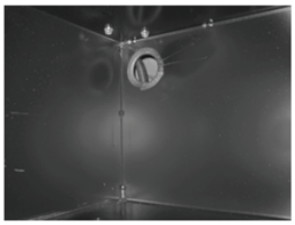

9) Drill 2.5" hole with hole saw and use molding to protect hoses from rough edges.

10) Drill 3/8" holes for pump as indicated and bolt pump to inside of toolbox.

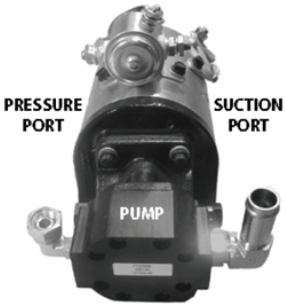

11) Attach suction hose and pressure hose to pump with adapters provided.

12) Attach suction hose to bottom of reservoir as indicated in diagram.

13) Attach black wire from hand control to negative terminal on solenoid.

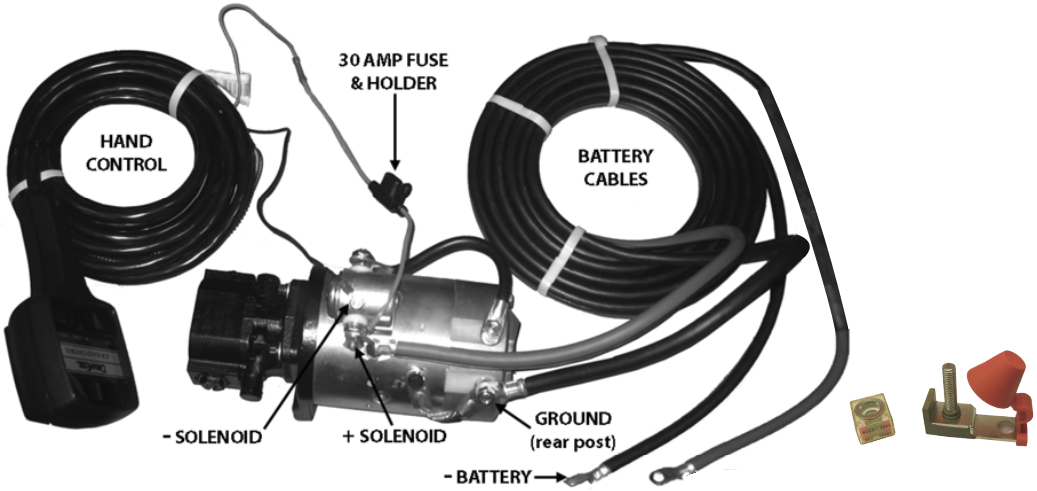

14a) Attach 30-amp fuse holder to positive terminal on solenoid and then to red wire from hand control.

14b) Attach 30-amp fuse holder to positive terminal on battery, run wire thru switch on dash. Then to red wire on valve harness for wireless remote.

15) Run battery cables through hold in toolbox and attach to E/H motor as indicated (black cable to rear post).

16) Run battery cables along frame rail and attach black cable to negative terminal on battery.

17) Attach 200-amp fuse holder to positive battery terminal.

18) Insert 200-amp fuse.

19) Attach red cable from E/H ontop of "ice cube" fuse. Install rubber cap.

Heavy Duty E/H Power Kit

E / H KIT INSTALLATION INSTRUCTIONS

* Read all instructions first.

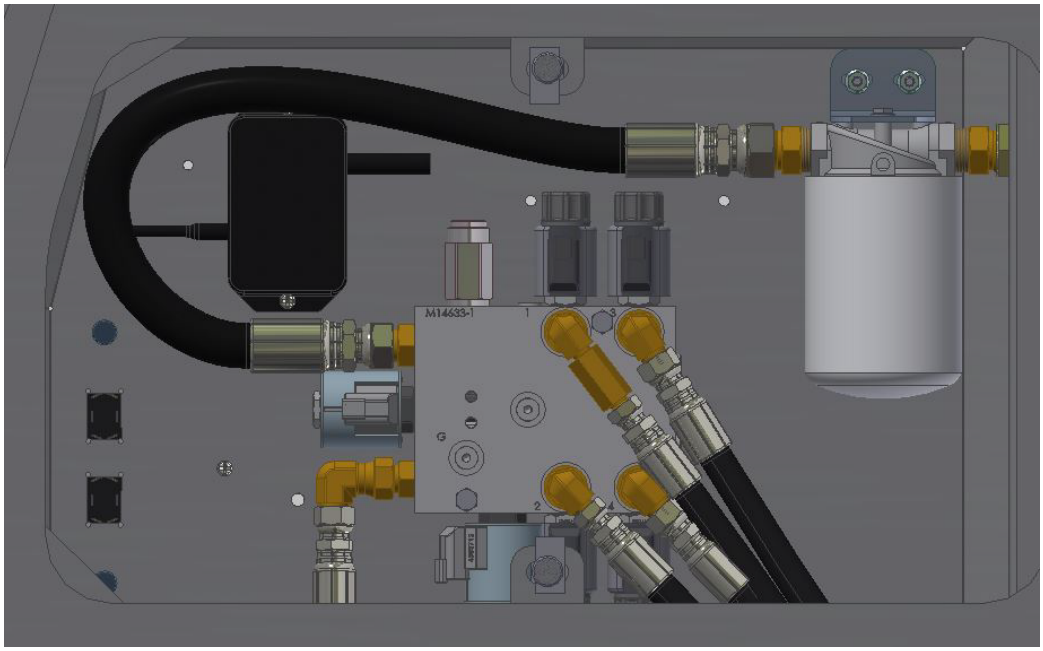

1. Attach adapters to valve and install inside cavity on headache rack.

2. Attach valve harness per diagram on decal.

3. Attach return hose to valve and filter housing. Attach pressure hose from pump.

4. Attach 1/2” hoses from squeeze cylinder to valve ports #3 & #4.

5. Attach 3/8” hoses from lift cylinder to valve ports #1 & #2.

6. Use cover plate to locate cutout in right side toolbox.

7. Use access cover or edge molding to protect hoses.

8. Drill holes for 3/8” bolts as indicated and bolt pump to inside of toolbox.

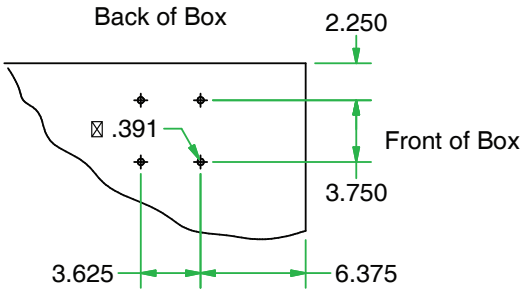

9. Attach power harness as indicated.

10. Attach 30-amp fuse holder to positive terminal on battery, run wire through switch on dash and then to the red wire on the harness.

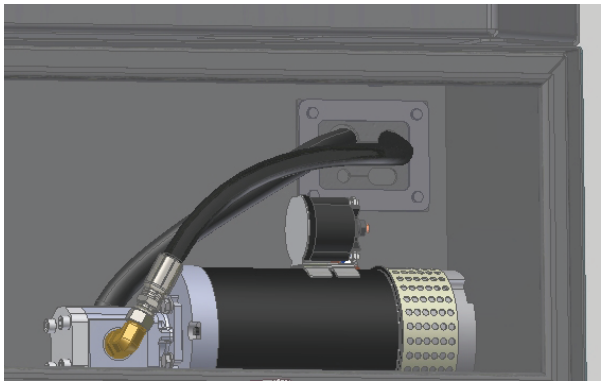

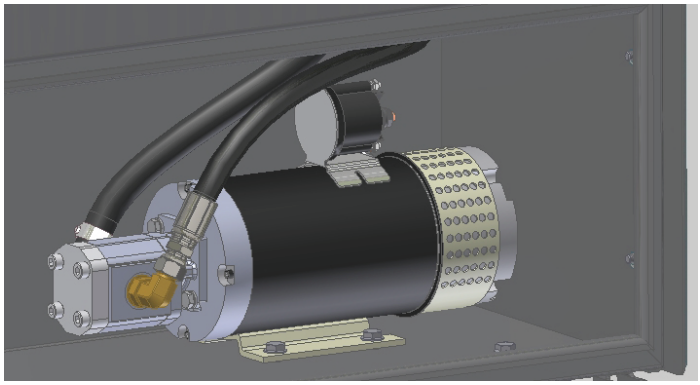

11. Attach suction hose and pressure hose to pump with adapters provided.

12. Attach suction hose to bottom of reservoir.

13. Run battery cables through hole in toolbox and attach to E/H motor as indicated.

14. Run battery cables along frame rail and attach black cable to negative terminal on battery.

15. Attach 200-amp fuse holder to positive battery terminal.

16. Insert 200-amp fuse.

17. Attach red cable from E/H ontop of “ice cube” fuse. Install rubber cap.

If installing the 735021 Switch Unit — Read the E/H Hybrid specific instructions first.

XRM Adapter Update

Kit # 205068

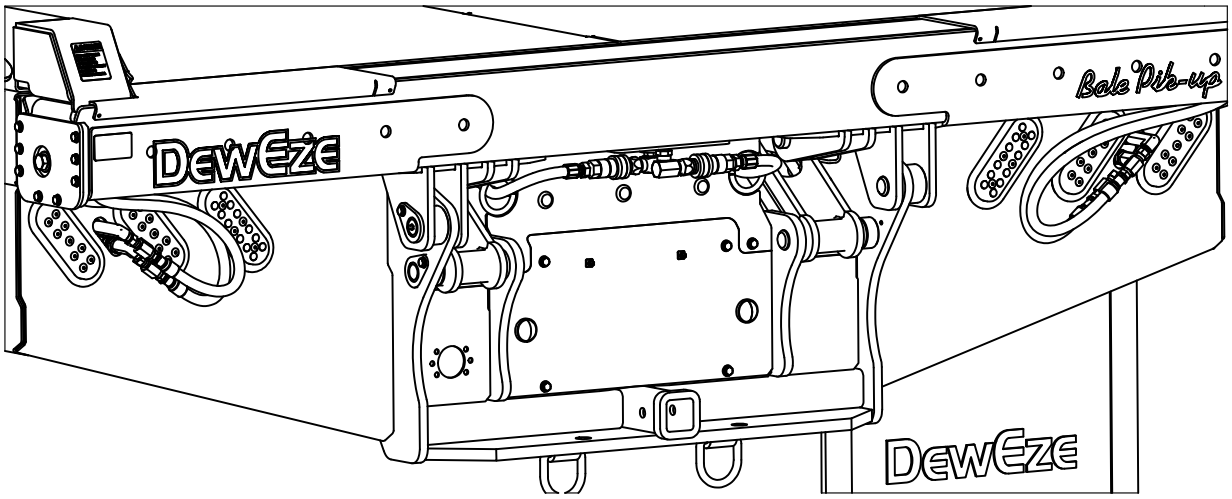

Parts List			
ITEM	QTY	PART #	DESCRIPTION
1	6	100578	Cable Tie 14" Black 50 Lb Tens
2	4	120123	ADAPTER, 6FP-6FJX
3	2	120271	ADAPTER, 6MP-6FPX
4	2	120596	ADAPTER, 6MJ-6MP LONG 90
5	2	120597	ADAPTER, 6MJ-6MP XX-LONG 90

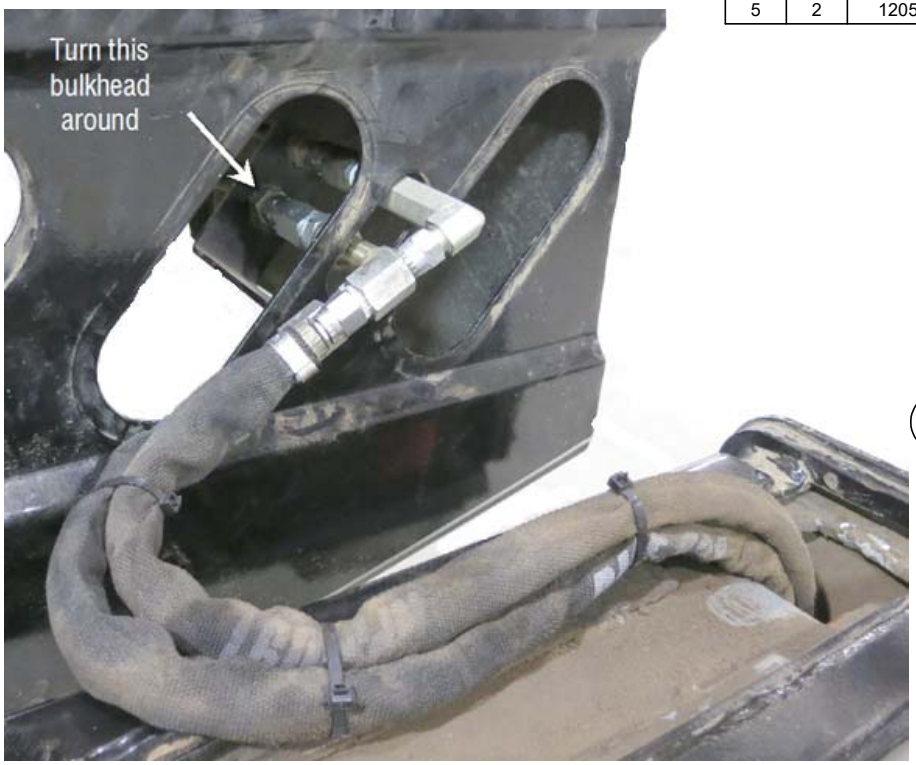

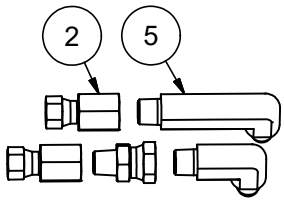

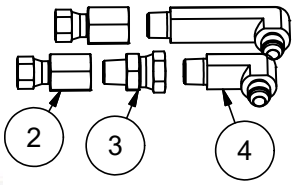

5/11/2012

NOTES

Harper Industries, Inc.
151 E. Highway 160
Harper, KS 67058

Telephone: 620-896-7381
Toll-Free: 800-835-1042
Fax: 620-896-7129

Website: www.harperindustries.com

E-mail: info@harperindustries.com